3–23–95
Vol. 60 No. 56
Pages 15229–15456

federal register

Thursday
March 23, 1995

Briefings on How To Use the Federal Register
For information on briefings in Washington, DC, and Dallas, TX, see announcement on the inside cover of this issue.

FEDERAL REGISTER Published daily, Monday through Friday, (not published on Saturdays, Sundays, or on official holidays), by the Office of the Federal Register, National Archives and Records Administration, Washington, DC 20408, under the Federal Register Act (49 Stat. 500, as amended; 44 U.S.C. Ch. 15) and the regulations of the Administrative Committee of the Federal Register (1 CFR Ch. I). Distribution is made only by the Superintendent of Documents, U.S. Government Printing Office, Washington, DC 20402.

The **Federal Register** provides a uniform system for making available to the public regulations and legal notices issued by Federal agencies. These include Presidential proclamations and Executive Orders and Federal agency documents having general applicability and legal effect, documents required to be published by act of Congress and other Federal agency documents of public interest. Documents are on file for public inspection in the Office of the Federal Register the day before they are published, unless earlier filing is requested by the issuing agency.

The seal of the National Archives and Records Administration authenticates this issue of the **Federal Register** as the official serial publication established under the Federal Register Act. 44 U.S.C. 1507 provides that the contents of the **Federal Register** shall be judicially noticed.

The **Federal Register** is published in paper, 24x microfiche and as an online database through *GPO Access*, a service of the U.S. Government Printing Office. The online database is updated by 6 a.m. each day the **Federal Register** is published. The database includes both text and graphics from Volume 59, Number 1 (January 2, 1994) forward. It is available on a Wide Area Information Server (WAIS) through the Internet and via asynchronous dial-in. The annual subscription fee for a single workstation is $375. Six-month subscriptions are available for $200 and one month of access can be purchased for $35. Discounts are available for multiple-workstation subscriptions. To subscribe, Internet users should telnet to swais.access.gpo.gov and login as newuser (all lower case); no password is required. Dial-in users should use communications software and modem to call (202) 512–1661 and login as swais (all lower case); no password is required; at the second login prompt, login as newuser (all lower case); no password is required. Follow the instructions on the screen to register for a subscription for the **Federal Register** Online via *GPO Access.* For assistance, contact the *GPO Access* User Support Team by sending Internet e-mail to help@eids05.eids.gpo.gov, or a fax to (202) 512–1262, or by calling (202) 512–1530 between 7 a.m. and 5 p.m. Eastern time, Monday through Friday, except Federal holidays.

The annual subscription price for the **Federal Register** paper edition is $494, or $544 for a combined **Federal Register**, Federal Register Index and List of CFR Sections Affected (LSA) subscription; the microfiche edition of the **Federal Register** including the Federal Register Index and LSA is $433. Six month subscriptions are available for one-half the annual rate. The charge for individual copies in paper form is $8.00 for each issue, or $8.00 for each group of pages as actually bound; or $1.50 for each issue in microfiche form. All prices include regular domestic postage and handling. International customers please add 25% for foreign handling. Remit check or money order, made payable to the Superintendent of Documents, or charge to your GPO Deposit Account, VISA or MasterCard. Mail to: New Orders, Superintendent of Documents, P.O. Box 371954, Pittsburgh, PA 15250–7954.

There are no restrictions on the republication of material appearing in the **Federal Register.**

How To Cite This Publication: Use the volume number and the page number. Example: 60 FR 12345.

SUBSCRIPTIONS AND COPIES

PUBLIC

Subscriptions:

Paper or fiche	**202–512–1800**
Assistance with public subscriptions	**512–1806**

Online:

Telnet swais.access.gpo.gov, login as newuser <enter>, no password <enter>; or use a modem to call (202) 512–1661, login as swais, no password <enter>, at the second login as newuser <enter>, no password <enter>.

Assistance with online subscriptions	**202–512–1530**

Single copies/back copies:

Paper or fiche	**512–1800**
Assistance with public single copies	**512–1803**

FEDERAL AGENCIES

Subscriptions:

Paper or fiche	**523–5243**
Assistance with Federal agency subscriptions	**523–5243**

For other telephone numbers, see the Reader Aids section at the end of this issue.

THE FEDERAL REGISTER

WHAT IT IS AND HOW TO USE IT

FOR: Any person who uses the Federal Register and Code of Federal Regulations.

WHO: The Office of the Federal Register.

WHAT: Free public briefings (approximately 3 hours) to present:

1. The regulatory process, with a focus on the Federal Register system and the public's role in the development of regulations.
2. The relationship between the Federal Register and Code of Federal Regulations.
3. The important elements of typical Federal Register documents.
4. An introduction to the finding aids of the FR/CFR system.

WHY: To provide the public with access to information necessary to research Federal agency regulations which directly affect them. There will be no discussion of specific agency regulations.

WASHINGTON, DC

WHEN: April 20 at 9:00 am

WHERE: Office of the Federal Register Conference Room, 800 North Capitol Street NW., Washington, DC (3 blocks north of Union Station Metro)

RESERVATIONS: 202–523–4538

DALLAS, TX

WHEN: March 30 at 9:00 am

WHERE: Conference Room 7A23
Earle Cabell Federal Building and Courthouse
1100 Commerce Street
Dallas, TX 75242

RESERVATIONS: 1–800–366–2998

Printed on recycled paper containing 100% post consumer waste

Contents

Federal Register

Vol. 60, No. 56

Thursday, March 23, 1995

Agricultural Marketing Service
PROPOSED RULES
Milk marketing orders:
Central Illinois, 15262–15263

Agriculture Department
See Agricultural Marketing Service
See Animal and Plant Health Inspection Service
See Forest Service
NOTICES
Agency information collection activities under OMB review, 15285

Air Force Department
NOTICES
Patent licenses; non-exclusive, exclusive, or partially exclusive:
Advanced Optical Equipment & Systems Corp., 15286

Animal and Plant Health Inspection Service
PROPOSED RULES
Federal Seed Act:
Imported seed; prohibited entry of shipments containing noxious weed seeds; list additions, 15257–15260
Noxious weeds; list deletions and additions, 15260–15262
NOTICES
Environmental statements; availability, etc.:
Nonregulated status determinations—
Calgene, Inc.; genetically engineered FLAVR SAVR tomato lines, 15284

Antitrust Division
NOTICES
National cooperative research notifications:
ATM Forum, 15308
Bell Communications Research, Inc., 15307
Cable Television Laboratories, Inc., 15307
Corporation for Open Systems International, 15306, 15307
EHC Technologies Consortium, 15307
HDP User Group International, Inc., 15306–15307
National Information Infrastructure Testbed, 15306
Petrotechnical Open Software Corp., 15305
Spray Drift Task Force, 15305
Technology Joint Venture, 15308
UnixWare Technology Group Inc., 15305

Army Department
See Engineers Corps
NOTICES
Meetings:
Science Board, 15286–15287

Arts and Humanities, National Foundation
See National Foundation on the Arts and the Humanities

Commerce Department
See Export Administration Bureau

Consumer Product Safety Commission
RULES
Bicycle helmets; safety standards, 15231–15232
NOTICES
Meetings; Sunshine Act, 15327

Defense Department
See Air Force Department
See Army Department
See Engineers Corps
See Navy Department
PROPOSED RULES
Acquisition regulations:
Munitions and strategic list items control and excess property demilitarization, 15276–15277
Federal Acquisition Regulation (FAR):
Ratification and protest costs, 15450–15452
NOTICES
Meetings:
Defense Partnership Council, 15287
Wage Committee, 15287

Education Department
RULES
Postsecondary education:
Strengthening institutions program, 15446–15447
NOTICES
Grants and cooperative agreements; availability, etc.:
Hispanic-serving institutions, 15448
Privacy Act:
Computer matching programs, 15428

Employment Standards Administration
See Wage and Hour Division

Energy Department
See Energy Efficiency and Renewable Energy Office
See Federal Energy Regulatory Commission
NOTICES
Financial assistance awards of $1 million or less; class deviation, 15288
Grants and cooperative agreements; availability, etc.:
Pacific Northwest and Alaska regional bioenergy program, 15288

Energy Efficiency and Renewable Energy Office
PROPOSED RULES
Consumer products; energy conservation program:
Water heater, kitchen range, oven, microwave oven, and clothes washer test procedures; and clothes washer, dryer, and dishwasher reporting requirements, 15330–15363

Engineers Corps
RULES
Danger zones and restricted areas:
Boundaries; potential navigation and charting errors, 15232–15233
NOTICES
Single-family residential development; nationwide permits; aquatic environment protection and regulatory reform, 15440–15443

Environmental Protection Agency
RULES
Air pollution control; new motor vehicles and engines:
On-board diagnostic systems; compliance with Federal requirements by optional compliance with revised California requirements, 15242–15247
Air quality implementation plans; approval and promulgation; various States:
California, 15241–15242
Illinois, 15233–15235
Ohio, 15235–15241
Superfund program:
National oil and hazardous substances contingency plan—
National priorities list update, 15247–15248
Water pollution control:
Great Lakes System; water quality guidance, 15366–15425
PROPOSED RULES
Air quality implementation plans; approval and promulgation; various States:
California, 15271–15273
Colorado, 15269–15270
Illinois, 15271
Ohio, 15270–15271
Clean Air Act:
Volatile organic compounds (VOC) emissions study; consumer and commercial products; regulation schedule, 15264–15268
Superfund program:
National oil and hazardous substances contingency plan—
National priorities list update, 15273–15275
NOTICES
Agency information collection activities under OMB review, 15289–15290
Drinking water:
Public water supply supervision program—
Virgin Islands, 15290

Executive Office of the President
See Presidential Documents
See Trade Representative, Office of United States

Export Administration Bureau
NOTICES
Export privileges, actions affecting:
Nandory, Joseph Jeno, 15285–15286

Federal Aviation Administration
RULES
Restricted areas, 15229
NOTICES
Environmental statements; availability, etc.:
Cal Black Memorial Airport, UT, 15320
Exemption petitions; summary and disposition, 15320–15322
Meetings:
Research, Engineering, and Development Advisory Committee, 15322
Passenger facility charges; applications, etc.:
Colorado Springs Municipal Airport, CO, 15323
Southwest Georgia Regional Airport, GA, 15322–15323

Federal Communications Commission
RULES
Radio services, special:
Private land mobile services—
Automatic vehicle monitoring systems, 15248–15255
Radio stations; table of assignments:
California, 15255
Florida and Georgia, 15255–15256
PROPOSED RULES
Practice and procedure:
New noncommercial educational applicants; comparative standards reexamination, 15275
Radio stations; table of assignments:
Florida, 15275–15276

Federal Election Commission
NOTICES
Meetings; Sunshine Act, 15327

Federal Emergency Management Agency
NOTICES
Radiological emergency response portal monitor contamination monitoring; standard, background, and comments resolution, 15290–15291

Federal Energy Regulatory Commission
NOTICES
Applications, hearings, determinations, etc.:
National Fuel Gas Supply Corp., 15289
Northern Natural Gas Co., 15289

Federal Highway Administration
NOTICES
Environmental statements; notice of intent:
Grant and Lafayette Counties, WI, 15323–15324

Federal Labor Relations Authority
NOTICES
Federal service labor-management relations statute:
Collective bargaining; comment solicitation for policy statement, 15291

Federal Maritime Commission
NOTICES
Freight forwarder licenses:
Superior Shipping, Inc., et al., 15291

Federal Reserve System
NOTICES
Agency information collection activities under OMB review, 15291–15292
Applications, hearings, determinations, etc.:
Community Bancshares, Inc. Employee Stock Ownership Plan, 15292
First Southern Bancshares, Inc., et al., 15292–15293
Torgerhagen, Kari, et al., 15293

Financial Management Service
See Fiscal Service

Fiscal Service
RULES
Bonds and notes, U.S. Treasury:
Series EE U.S. savings bonds; rate changes, 15430–15433

Fish and Wildlife Service
PROPOSED RULES
Endangered and threatened species:
Bald eagle, 15280–15281
Findings on petitions, etc.—
Amargosa toad, 15280
Boreal toad (southern Rocky Mountain population), 15281–15283

Importation, exportation, and transportation of wildlife
Wildlife specimens; scientific exchange, 15277–15279
NOTICES
Environmental statements; availability, etc.:
Incidental take permits—
Waterside Down, Brevard County, FL; Florida scrub jay, 15303–15304

Forest Service
NOTICES
Meetings:
Southwest Oregon Provincial Interagency Executive Committee, 15284–15285

General Services Administration
PROPOSED RULES
Federal Acquisition Regulation (FAR):
Ratification and protest costs, 15450–15452

Geological Survey
NOTICES
Meetings:
Earth Observing System Land Processes Distributed Active Archive Center Science Advisory Panel, 15304

Health and Human Services Department
See Health Resources and Services Administration
See Substance Abuse and Mental Health Services Administration

Health Resources and Services Administration
NOTICES
Grants and cooperative agreements; availability, etc.:
Organ donor increase development and implementation plan, 15293–15294

Housing and Urban Development Department
NOTICES
Agency information collection activities under OMB review, 15295–15296
Grants and cooperative agreements; availability, etc.:
Public and Indian housing—
Construction trades and public housing operations; public housing apprenticeship demonstration program, 15436–15438

Interior Department
See Fish and Wildlife Service
See Geological Survey
See Land Management Bureau
See Minerals Management Service

Interstate Commerce Commission
NOTICES
Rail carriers:
Cost recovery procedures—
Adjustment factor, 15304
Railroad operation, acquisition, construction, etc.:
Springfield Terminal Railway Co., 15305

Justice Department
See Antitrust Division
See National Institute of Corrections
See Parole Commission
NOTICES
Pollution control; consent judgments:
Blue Diamond Growers, 15308–15309
Minnesota Mining & Manufacturing Co., 15308

Labor Department
See Occupational Safety and Health Administration
See Wage and Hour Division

Land Management Bureau
RULES
Public land orders:
Alaska, 15248
NOTICES
Coal leases, exploration licenses, etc.:
Colorado, 15296–15297
Oil and gas leases:
Wyoming, 15297–15298
Realty actions; sales, leases, etc.:
Montana, 15298–15299
Resource management plans, etc.:
Royal Gorge Resource Area, CO, 15299
Survey plat filings:
Wisconsin, 15299–15301
Withdrawal and reservation of lands:
California, 15301–15303
New Mexico, 15301

Merit Systems Protection Board
NOTICES
Meetings; Sunshine Act, 15327–15328

Minerals Management Service
NOTICES
Meetings:
Minerals Management Advisory Board, 15304

National Aeronautics and Space Administration
PROPOSED RULES
Federal Acquisition Regulation (FAR):
Ratification and protest costs, 15450–15452

National Council on Disability
NOTICES
Meetings; Sunshine Act, 15328

National Foundation on the Arts and the Humanities
NOTICES
Meetings:
Humanities Panel, 15309

National Institute of Corrections
NOTICES
Grants and cooperative agreements; availability, etc.:
Jail mental health services; quarterly newsletter development and distribution, 15309

National Science Foundation
NOTICES
Arctic research plan; fourth biennial revision; comment opportunity, 15309–15310

Navy Department
NOTICES
Meetings:
Naval Research Advisory Committee, 15287–15288

Nuclear Regulatory Commission
NOTICES
Reports; availability, etc.:
Human system interface design review guideline (Revision 1), 15312–15313

Applications, hearings, determinations, etc.:
Advanced Medical Systems, Inc., 15312
Niagara Mohawk Power Corp., 15310–15311

Occupational Safety and Health Administration
PROPOSED RULES
Safety and health standards, etc.:
Respiratory protection, 15263–15264

Office of United States Trade Representative
See Trade Representative, Office of United States

Parole Commission
NOTICES
Meetings; Sunshine Act, 15327

Presidential Documents
PROCLAMATIONS
West Bank and Gaza Strip; designation as a beneficiary of the GSP (Proc. 6778), 15455

Public Health Service
See Health Resources and Services Administration
See Substance Abuse and Mental Health Services Administration

Securities and Exchange Commission
NOTICES
Self-regulatory organizations; proposed rule changes:
American Stock Exchange, Inc., 15316–15318
Pacific Stock Exchange, Inc., 15315–15316
Philadelphia Stock Exchange, Inc., 15318–15320
Applications, hearings, determinations, etc.:
Jackson National Life Insurance Co. et al., 15313–15315

State Department
NOTICES
Meetings:
International Telecommunications Advisory Committee, 15320

Substance Abuse and Mental Health Services Administration
NOTICES
Grants and cooperative agreements; availability, etc.:
Knowledge dissemination conferences, etc.; correction, 15294–15295

Trade Representative, Office of United States
RULES
Uruguay Round Agreements:
Beef imports; tariff-rate quota implementation, 15229–15230

Transportation Department
See Federal Aviation Administration
See Federal Highway Administration

Treasury Department
See Fiscal Service

United States Information Agency
NOTICES
Grants and cooperative agreements; availability, etc.:
Burmese refugee program, 15324–15325
Meetings:
Cuba Broadcasting Advisory Board, 15325–15326

Wage and Hour Division
RULES
Migrant and seasonal agricultural worker protection:
Secretary's final decision and order regarding petition; CFR correction, 15232

Separate Parts In This Issue

Part II
Department of Energy, Energy Efficiency and Renewable Energy Office, 15330–15363

Part III
Environmental Protection Agency, 15366–15425

Part IV
Department of Education, 15428

Part V
Department of the Treasury, Fiscal Service, 15430–15433

Part VI
Department of Housing and Urban Development, 15436–15438

Part VII
Department of Defense, Corps of Engineers, 15440–15443

Part VIII
Department of Education, 15446–15448

Part IX
Department of Defense, General Services Administration, and National Aeronautics and Space Administration, 15450–15452

Part X
The President, 15455

Reader Aids
Additional information, including a list of public laws, telephone numbers, and finding aids, appears in the Reader Aids section at the end of this issue.

Electronic Bulletin Board
Free **Electronic Bulletin Board** service for Public Law numbers, **Federal Register** finding aids, and a list of documents on public inspection is available on 202–275–1538 or 275–0920.

CFR PARTS AFFECTED IN THIS ISSUE

A cumulative list of the parts affected this month can be found in the Reader Aids section at the end of this issue.

3 CFR

Proclamations:

6778 15455

7 CFR

Proposed Rules:

201 15257
360 15260
1050 15262

10 CFR

Proposed Rules:

430 15330

14 CFR

73 15229

15 CFR

2012 15229

16 CFR

1203 15231

29 CFR

500 15232

Proposed Rules:

1910 15263
1915 15263
1926 15263

31 CFR

351 15430

33 CFR

334 15232

34 CFR

607 15446

40 CFR

9 15366
52 (3 documents) 15233, 15235, 15241
86 15242
122 15366
123 15366
131 15366
132 15366
300 15247

Proposed Rules:

Ch. I 15264
52 (4 documents) 15269, 15270, 15271
300 15273

43 CFR

Public Land Orders:

7125 15248

47 CFR

2 15248
73 (2 documents) 15255
90 15248

Proposed Rules:

1 15275
73 15275

48 CFR

Proposed Rules:

1 15450
32 15450
33 15450
52 15450
245 15276
252 15276

50 CFR

Proposed Rules:

14 15277
17 (3 documents) 15280, 15281

Rules and Regulations

Federal Register

Vol. 60, No. 56

Thursday, March 23, 1995

This section of the FEDERAL REGISTER contains regulatory documents having general applicability and legal effect, most of which are keyed to and codified in the Code of Federal Regulations, which is published under 50 titles pursuant to 44 U.S.C. 1510.

The Code of Federal Regulations is sold by the Superintendent of Documents. Prices of new books are listed in the first FEDERAL REGISTER issue of each week.

DEPARTMENT OF TRANSPORTATION

Federal Aviation Administration

14 CFR Part 73

[Airspace Docket No. 94–ASW–21]

Change in Using Agency for Restricted Areas R–5107C, D, E, F, G, H; R–5109A, B; and R–5111A, B, C; NM

AGENCY: Federal Aviation Administration (FAA), DOT.

ACTION: Final rule.

SUMMARY: This action changes the using agency for Restricted Areas R–5107C, D, E, F, G, H; R–5109A, B; White Sands Missile Range, NM, and R–5111A, B, C; Elephant Butte, NM, from ''Deputy for Air Force, White Sands Missile Range, NM 88002'' to ''Commanding General, White Sands Missile Range, NM.'' This is an administrative change initiated by the U.S. Air Force to reflect its reorganization of responsibilities at White Sands Missile Range. There are no changes to the boundaries, designated altitudes, times of designation, or activities conducted within the affected restricted areas.

EFFECTIVE DATE: 0901 UTC, May 25, 1995.

FOR FURTHER INFORMATION CONTACT: Pete Magarelli, Military Operations Program Office (ATM–420), Office of Air Traffic System Management, Federal Aviation Administration, 800 Independence Avenue, SW., Washington, DC 20591; telephone: (202) 267–7130.

SUPPLEMENTARY INFORMATION:

The Rule

This amendment to part 73 of the Federal Aviation Regulations changes the using agency for Restricted Areas R–5107C, D, E, F, G, H; R–5109A, B; White Sands Missile Range, NM, and R–5111A, B, C; Elephant Butte, NM, from ''Deputy for Air Force, White Sands Missile Range, NM 88002'' to ''Commanding General, White Sands Missile Range, NM.'' This is an administrative change initiated by the U.S. Air Force to reflect its reorganization of responsibilities at White Sands Missile Range. There are no changes to the boundaries, designated altitudes, times of designation, or activities conducted within the affected restricted areas. Because this action is a minor technical amendment in which the public is not particularly interested, I find that notice and public procedure under 5 U.S.C. 553(b) are unnecessary. Section 73.51 of part 73 of the Federal Aviation Regulations was republished in FAA Order 7400.8B dated March 9, 1994.

The FAA has determined that this regulation only involves an established body of technical regulations for which frequent and routine amendments are necessary to keep them operationally current. It, therefore—(1) is not a ''significant regulatory action'' under Executive Order 12866; (2) is not a ''significant rule'' under DOT Regulatory Policies and Procedures (44 FR 11034; February 26, 1979); and (3) does not warrant preparation of a regulatory evaluation as the anticipated impact is so minimal. Since this is a routine matter that will only affect air traffic procedures and air navigation, it is certified that this rule will not have a significant economic impact on a substantial number of small entities under the criteria of the Regulatory Flexibility Act.

Environmental Review

This action changes the using agency of the restricted areas. There are no changes to the boundaries, designated altitudes, times of designation, or activities conducted within the affected restricted areas. Accordingly, this action is not subject to environmental assessments and procedures as set forth in FAA Order 1050.1D, ''Policies and Procedures for Considering Environmental Impacts'' and the National Environmental Policy Act.

List of Subjects in 14 CFR Part 73

Airspace, Navigation (air).

Adoption of the Amendment

In consideration of the foregoing, the Federal Aviation Administration amends 14 CFR part 73 as follows:

PART 73—[AMENDED]

1. The authority citation for part 73 continues to read as follows:

Authority: 49 U.S.C. app. 1348(a), 1354(a), 1510, 1522; E.O. 10854, 24 FR 9565, 3 CFR, 1959–1963 Comp., p. 389; 49 U.S.C. 106(g); 14 CFR 11.69.

§ 73.51 [Amended]

2. Section 73.51 is amended as follows:

R–5107C, D, E, F, G and H; White Sands Missile Range, NM [Amended]

By removing ''Using agency. Deputy for Air Force, White Sands Missile Range, NM 88002.'' and substituting the following: ''Using agency. Commanding General, White Sands Missile Range, NM.''

R–5109A and B; White Sands Missile Range, NM [Amended]

By removing ''Using agency. Deputy for Air Force, White Sands Missile Range, NM 88002.'' and substituting the following: ''Using agency. Commanding General, White Sands Missile Range, NM.''

R–5111A, B and C; Elephant Butte, NM [Amended]

By removing ''Using agency. Deputy for Air Force, White Sands Missile Range, NM 88002.'' and substituting the following: ''Using agency. Commanding General, White Sands Missile Range, NM.''

Issued in Washington, DC, on March 15, 1995.

Harold W. Becker,

Manager, Airspace-Rules and Aeronautical Information Division.

[FR Doc. 95–7192 Filed 3–22–95; 8:45 am]

BILLING CODE 4910–13–P

OFFICE OF THE UNITED STATES TRADE REPRESENTATIVE

15 CFR Part 2012

Implementation of Tariff-Rate Quota for Imports of Beef

AGENCY: Office of the United States Trade Representative.

ACTION: Interim rule with request for comments.

SUMMARY: This rule provides for export certificates to accompany imports of beef under the tariff-rata quota for beef established as a result of the Uruguay Round Agreements.

DATES: Interim rule effective on March 23, 1995. Comments must be received on or before May 22, 1995.

ADDRESSES: Comments may be sent to Len Condon, Deputy Assistant United States Trade Representative for Agricultural Affairs, Office of the United States Trade Representative, 600 17th Street NW., Washington, DC 20506.

FOR FURTHER INFORMATION CONTACT: Len Condon, Deputy Assistant United States Trade Representative for Agricultural Affairs, Office of the United States Trade Representative, 600 17th Street NW., Washington, DC 20506; telephone: (202) 395–6127.

SUPPLEMENTARY INFORMATION:

Background

As a result of the Uruguay Round Agreements, approved by the Congress in section 101 of the Uruguay Round Agreement Act (URAA) Pub. L. 103–465), the President, by Presidential Proclamation No. 6763, has established a tariff-rate quota for beef. (Under a tariff-rate quota, the United States applies one tariff rate, known as the ''in-quota tariff rate,'' to imports of a product up to a particular amount, known as the ''in-quota quantity,'' and a different, higher tariff rate, known as the ''over-quota tariff rate,'' to imports of the product in excess of that amount.) The United States has also agreed to assign Australia, Japan, and New Zealand particular shares of the in-quota quantity.

Additional U.S. note 3 to chapter 2 of the Harmonized Tariff Schedule of the United States, as added by the Annex to Proclamation No. 6763, provides that imports under the tariff-rate quota for beef ''are subject to regulations issued by the United States Trade Representative.''

As part of the implementation of this tariff-rate quota, the United States is offering exporting countries that have an allocation of the in-quota quantity the opportunity to use export certificates for their beef exports to the United States. Using export certificates assures an exporting country that only those exports that it intends for the United States market are counted against its in-quota allocation, and in this instance ensures that imports do not disrupt the orderly marketing of beef in the United States. However, a country does not need to participate in the export certificate program to receive the in-quota tariff rate for its share of the in-quota quantity.

The government of New Zealand has specifically requested that the opportunity to use export certificates be made available to it and had requested that this opportunity be available as of January 1, 1995. It was not possible to promulgate the necessary regulations by January 1, 1995, but the United States government is responding to the request of the government of New Zealand as promptly as possible.

Under the interim rule, a country wishing to avail itself of export certificates must notify USTR, provide the necessary supporting information, and otherwise satisfy USTR that the country is a participating country. (USTR intends to publish a notice in the **Federal Register** whenever a country becomes, or ceases to be, a participating country.) The United States Customs Service will then be responsible for ensuring that no imports of beef from that country are counted against the country's in-quota allocation unless there is a proper export certificate for that beef.

The Customs Service will separately issue regulations governing Customs implementation of this rule. Accordingly, no export certificates will be required for imports from a country until the Customs Service regulations are in effect and USTR determines that the country is a participating country.

Review

This rule has been determined to be a ''significant regulatory action'' under Executive Order 12866 and has been reviewed by the Office of Management and Budget.

The information collection requirements referred to in this rule will be submitted to the Office of Management and Budget by the Customs Service in accordance with 44 U.S.C. Chapter 35 for approval under OMB Number 1515–0065.

No regulatory flexibility analysis is required for this rule since neither 5 U.S.C. 553 nor any other provision of law requires publication of a general notice of proposed rulemaking with respect to this rule. However, the United States Trade Representative has also determined that the rule will not have a significant economic impact on a substantial number of small entities.

List of Subjects in 15 CFR Part 2012

Beef, Export certificates, Imports, Meat, Tariff-rate quotas.

For the reasons set out in the preamble, 15 CFR is amended by adding the following new part 2012 to read as follows:

PART 2012—IMPLEMENTATION OF TARIFF-RATE QUOTAS FOR BEEF

Sec.
2012.1 Purpose.
2012.2 Definitions.
2012.3 Export certificates.

Authority: Proclamation No. 6763; sec. 404, Pub. L. 103–465, 108 Stat. 4809.

§ 2012.1 Purpose.

The purpose of this part is to provide for the implementation of the tariff-rate quota for beef established as a result of the Uruguay Round Agreements, approved by the Congress in section 101 of the Uruguay Round Agreements Act (Pub. L. 103–465). In particular, this part provides for the administration of export certificates where a country that has an allocation of the in-quota quantity under the tariff-rate quota has chosen to use export certificates.

§ 2012.2 Definitions.

Unless the context otherwise requires, for the purpose of this subpart, the following terms shall have the meanings assigned below.

(a) *Beef* means any article classified under any of the subheadings of the HTS specified in additional U.S. note 3 to chapter 2 of the HTS.

(b) *Allocated country* means a country to which an allocation of a particular quantity of beef has been assigned under additional U.S. note 3 to chapter 2 of the HTS.

(c) *Enter* means to enter, or withdraw from warehouse, for consumption.

(d) *HTS* means the Harmonized Tariff Schedule of the United States.

(e) *Participating country* means any allocated country that USTR has determined is, and notified the U.S. Customs Service as being eligible to use export certificates.

(f) *USTR* means the United States Trade Representative or the designee of the United States Trade Representative.

§ 2012.3 Export certificates.

(a) Beef may only be entered as a product of a participating country if the importer makes a declaration to the Customs Service, in the form and manner determined by the Customs Service, that a valid export certificate is in effect with respect to the beef.

(b) To be valid, an export certificate shall:

(1) Be issued by or under the supervision of the government of the participating country;

(2) Specify the name of the exporter, the product description and quantity, and the calendar year for which the export certificate is in effect;

(3) Be distinct and uniquely identifiable; and

(4) Be used in the calendar year for which it is in effect.

Michael Kantor,

United States Trade Representative.

[FR Doc. 95–7125 Filed 3–22–95; 8:45 am]

BILLING CODE 3190–01–M

CONSUMER PRODUCT SAFETY COMMISSION

16 CFR Part 1203

Interim Rule: Safety Standards for Bicycle Helmets

AGENCY: Consumer Product Safety Commission.

ACTION: Interim rule.

SUMMARY: The Commission announces that certain voluntary standards for bicycle helmets will become interim mandatory standards pursuant to the Children's Bicycle Helmet Safety Act of 1994. These interim mandatory standards shall remain in effect until replaced by a final standard to be issued by the Commission. These statutory interim standards are the American National Standards Institute (''ANSI'') standard Z90.4–1984, the Snell Memorial Foundation standard B–90, and ASTM standard F 1447–1993.

The Commission also announces its determination, pursuant to the Bicycle Helmet Safety Act, that five additional voluntary safety standards for bicycle helmets are appropriate as interim mandatory standards. These standards are ASTM F 1447–1994, Snell B–90S, N–94, and B–95, and the Canadian voluntary standard CAN/CSA–D113.2–M89.

Failure of a bicycle helmet manufactured after the effective date of the interim mandatory standards to comply with at least one of the interim standards shall be considered a violation of a consumer product safety standard promulgated under the Consumer Product Safety Act.

DATES: The interim mandatory standards for bicycle helmets will become effective March 15, 1995, and shall apply to all bicycle helmets manufactured after that date.

The incorporation by reference of certain publications listed in the regulation is approved by the Director of the Federal Register as of March 23, 1995.

FOR FURTHER INFORMATION CONTACT: Scott Heh, Project Manager, Directorate for Engineering Sciences, Consumer Product Safety Commission, Washington, D.C. 20207; telephone (301)504–0494 ext. 1308.

SUPPLEMENTARY INFORMATION: On June 16, 1994, the Children's Bicycle Helmet Safety Act of 1994 (the ''Act'') was enacted. Secs. 201–207, Pub. L. 103–267, 108 Stat. 726–729; 15 U.S.C. 6001–6006. This Act provides that bicycle helmets manufactured 9 months or more from that date (i.e., on or after March 16, 1995) shall conform to one of the following interim safety standards: (1) The American National Standards Institute (ANSI) standard designated as Z90.4–1984, (2) the Snell Memorial Foundation standard designated as B–90, (3) the ASTM, formerly the American Society for Testing and Materials, standard designated as F 1447, or (4) any other standard that the Commission determines is appropriate. In this notice, the Commission codifies these interim mandatory standards as 16 CFR part 1203 and clarifies that ASTM standard F 1447 means the 1993 version of that standard. This is the version of the F 1447 standard that was in effect at the time the Act was enacted. The Act provides that failure to conform to an interim standard shall be considered a violation of a consumer product safety standard issued under the Consumer Product Safety Act (CPSA), 15 U.S.C. 2051–2084.

The Act also directs the Consumer Product Safety Commission to begin a proceeding under 5 U.S.C. 553 to:

1. Review the requirements of the interim standards described above and establish a final standard based on such requirements,
2. Include in the final standard a provision to protect against the risk of helmets coming off the heads of bicycle riders,
3. Include in the final standard provisions that address the risk of injury to children, and
4. Include additional provisions as appropriate.

The Act provides that the final standard shall take effect 1 year from the date it is issued and that the standard shall be considered to be a consumer product safety standard issued under the CPSA. However, the Act also provides that the provisions of the CPSA regarding rulemaking procedures, statutory findings, and judicial review (15 U.S.C. 2056, 2058, 2060, and 2079(d)) shall not apply to this proceeding or to the final standard. When the final standard becomes effective, it will replace the interim standards.

The Commission reviewed the bicycle helmet standards identified in the Act (ANSI, ASTM, and Snell B–90), as well as international bicycle helmet standards and draft revisions of the ANSI, ASTM, and Snell standards that were under consideration. Based on this review, the Commission developed a proposed mandatory safety standard for bicycle helmets. 59 FR 41719 (August 15, 1994). The proposed final safety standard contains requirements for general construction, labeling, peripheral vision, impact attenuation, and dynamic strength of the retention system of bicycle helmets. In addition to requirements derived from one or more of the voluntary standards applicable to this product, the proposed standard includes requirements specifically applicable to children's helmets and requirements to prevent helmets from coming off during an accident. The Commission also proposed testing and recordkeeping requirements so it can ensure that helmets subject to the standard meet its requirements.

The August 15, 1994, proposal also described the statutory interim standards, explained that the Commission could determine that additional interim standards were appropriate, and stated that the Commission had not yet done so. Two comments received by the Commission on that notice requested that the Commission designate certain other voluntary standards for bicycle helmets as interim mandatory standards. The Snell Memorial Foundation requested that, in addition to the Snell B–90 standard specified by the Act, three other Snell standards be determined appropriate as interim mandatory bicycle helmet standards. These additional Snell standards are: (1) B–90S (a supplemental revision of the Snell B–90 standard), (2) N–94 (a multi-purpose helmet standard), and B–95 (the latest revision of the Snell bicycle helmet standard, which will take effect in 1995). Snell states that helmets certified to any of these three standards will also conform to the Snell B–90 standard specified in the Act.

The Health Protection Branch of Health Canada recommended that the Canadian voluntary standard (Cycling Helmets–CAN/CSA–D113.1–M89) be determined as an appropriate interim mandatory standard. Health Canada stated that such action would comport with Article 906 of the North American Free Trade Agreement (''NAFTA''), which states that ''the Parties shall, to the greatest extent practicable, make compatible their respective standards-related measures * * *.''

In addition to reviewing the provision and test methods of the requested Snell and Canadian interim standards, the Commission also evaluated the 1994 revision to ASTM F 1447. The Commission concluded that these standards are comparable to, and in some cases exceed, the safety performance criteria of the interim standards identified in the Act. Accordingly, the Commission determines that these additional voluntary standards are appropriate as interim mandatory safety standards for bicycle helmets.

List of Subjects in 16 CFR Part 1203

Consumer protection, Bicycles, Incorporation by reference, Infants and children, Safety.

For the reasons given above, the Commission adds a new part 1203 of Title 16 of the Code of Federal Regulations, to read as follows:

PART 1203—SAFETY STANDARD FOR BICYCLE HELMETS

Sec.
1203.1 Purpose and basis.
1203.2 Scope and effective date.
1203.3 Interim safety standards.

Authority: Secs. 201–207, Pub. L. 103–267, 108 Stat. 726–729, 15 U.S.C. 6001–6006.

§ 1203.1 Purpose and basis.

The purpose and basis of this rule is to protect bicyclists from head injuries by ensuring that bicycle helmets comply with the requirements of appropriate existing voluntary standards, as provided in 15 U.S.C. 6004(a).

§ 1203.2 Scope and effective date.

(a) Bicycle helmets manufactured after March 15, 1995, shall comply with the requirements of one of the standards specified in § 1203.3. This requirement shall be considered a consumer product safety standard issued under the Consumer Product Safety Act.

(b) A bicycle helmet is any headgear marketed as suitable for providing protection from head injuries associated with bicycle use.

(c) These interim mandatory safety standards will not apply to bicycle helmets manufactured after the effective date of a final bicycle helmet standard to be issued in the future by the Commission.

§ 1203.3 Interim safety standards.

(a) Bicycle helmets must comply with one or more of the following standards, which are incorporated herein by reference:

(1) American National Standards Institute (ANSI) standard Z90.4–1984, Protective Headgear for Bicyclists,

(2) ASTM standards F 1447–93 or F 1447–94, Standard Specification for Protective Headgear Used in Bicycling, incorporating the relevant provisions of ASTM F 1446–93 or ASTM F 1446–94, Standard Test Methods for Equipment and Procedures Used in Evaluating the Performance Characteristics of Protective Headgear, respectively,

(3) Canadian Standards Association standard, Cycling Helmets CAN/CSA–D113.2–M89,

(4) Snell Memorial Foundation (Snell) 1990 Standard for Protective Headgear for Use in Bicycling (designation B–90),

(5) Snell 1990 Standard for Protective Headgear for Use in Bicycling, including March 9, 1994 Supplement (designation B–90S),

(6) Snell 1994 Standard for Protective Headgear for Use in Non-Motorized Sports (designation N–94), or

(7) Snell 1995 Standard for Protective Headgear for Use with Bicycles B–95.

(b) This incorporation by reference was approved by the Director of the Federal Register in accordance with 5 U.S.C. 552(a) and 1 CFR part 51. Copies of the standards may be obtained as follows. Copies of the ANSI Z90.4 standard are available from: American National Standards Institute, 11 W. 42nd Street, 13th Floor, New York, NY 10036. Copies of the ASTM standards are available from: ASTM, 1916 Race Street, Philadelphia, PA 19103. Copies of the Canadian Standards Association CAN/CSA–D113.2–M89 standard are available from: CSA, 178 Rexdale Boulevard, Rexdale (Toronto), Ontario, Canada, M9W 1R3. Copies of the Snell standards are available from: Snell Memorial Foundation, Inc., P.O. Box 493, 7 Flowerfield, Suite 28, St. James, New York 11780. Copies may be inspected at the Office of the Secretary, Consumer Product Safety Commission, 4330 East-West Highway, Bethesda, Maryland 20814, or at the Office of the Federal Register, 800 N. Capitol Street NW, Room 700, Washington, DC.

Dated: March 16, 1995.

Sadye E. Dunn,

Secretary, Consumer Product Safety Commission.

[FR Doc. 95–7082 Filed 3–22–95; 8:45 am]

BILLING CODE 6355–01–P

DEPARTMENT OF LABOR

Wage and Hour Division

29 CFR Part 500

Migrant and Seasonal Agricultural Worker Protection Regulations

CFR Correction

In title 29 of the Code of Federal Regulations, parts 500 to 899, revised as of July 1, 1994, § 500.268 appearing on page 50 should be removed and the following § 500.268 inserted:

§ 500.268 Final decision of the Secretary.

(a) The Secretary's final Decision and Order shall be issued within 120 days from the notice of intent granting the petition, and served upon all parties and the Chief Administrative Law Judge, in person or by certified mail.

(b) Upon receipt of an Order of the Secretary modifying or vacating the Decision and Order of an Administrative Law Judge, the Chief Administrative Law Judge shall substitute such Order for the Decision and Order of the Administrative Law Judge.

BILLING CODE 1505-01-D

DEPARTMENT OF DEFENSE

Department of the Army

Corps of Engineers

33 CFR Part 334

Danger Zone and Restricted Area Regulations

AGENCY: Army Corps of Engineers, DOD.

ACTION: Final rule.

SUMMARY: The U.S. Army Corps of Engineers is amending the regulations in 33 CFR Part 334 to add a clause that alerts mariners that potential navigation and charting errors may occur in the boundaries of some danger zones and restricted areas as a result of the updating and replacement of the North American Datum of 1927 with the North American Datum of 1983. The promulgation of these regulations will notify mariners that geographic coordinates establishing danger zone and restricted area boundaries, promulgated in 33 CFR Part 334 are not to be used for plotting on maps and charts where NAD 83 is referenced unless the geographic coordinates in the regulations are expressly labeled ''NAD 83''. Geographic coordinates without the NAD 83 reference may be plotted on charts or maps which are referenced to NAD 83 only after applying the correct formula that is published on the map or chart being used.

EFFECTIVE DATE: April 24, 1995.

FOR FURTHER INFORMATION CONTACT: Mr. Ralph Eppard at (202) 272–1783.

SUPPLEMENTARY INFORMATION: A datum is a reference point, line or surface used as a reference in surveying and mapping. Through the use of satellites and other modern surveying techniques, it is now possible to establish global reference systems. The North American Datum of 1983 (NAD 83), a new adjustment of the U.S. network of horizontal control, has been adopted as a standard reference datum by the United States and Canada. In March 1988, the National Ocean Service, National Oceanic and Atmospheric Administration, commenced publishing charts in NAD 83. The parameters of the Ellipsoid of reference used with NAD 83 are very close to those used for the

World Geodetic System of 1984 (WGS 84). The ellipsoid used for NAD 83, Geodetic Reference System 1980 (GRS 80), is earth-centered or geocentric as opposed to the nongeocentric ellipsoids previously employed. This means that the center of the ellipsoid coincides with the center of the mass of the earth. Any inquiries and requests for further information regarding NAD 83 and National Ocean Service nautical charts should be addressed to: Director, Coast Survey (NCG2), National Ocean Service, NOAA, 1315 East-West Highway, Station 6147, Silver Spring, Maryland 20910–3282.

Pursuant to its authorities in Section 7 of the Rivers and Harbors Act of 1917 (40 Stat. 266; 33 U.S.C. 1) and Chapter XIX of the Army Appropriations Act of 1919 (40 Stat. 892; 33 U.S.C. 3), the Corps of Engineers is amending the regulations in 33 CFR 334 by inserting the following clause that alerts mariners to the potential for navigation and charting errors in consequence of the NAD 83.

''Geographic coordinates expressed in terms of latitude or longitude, or both, are not intended for plotting on maps or charts whose reference horizontal datum is the North American Datum of 1983 (NAD 83), unless such geographic coordinates are expressly labeled NAD 83. Geographic coordinates without the NAD 83 reference may be plotted on maps or charts referenced to NAD 83 only after application of the appropriate corrections that are published on the particular map or chart being used''. On January 24 1995, the Corps published this change in the Notice of Proposed Rulemaking section of the **Federal Register** (60 FR 4582–4583) with the comment period ending on February 23, 1995. We received no comments.

Notes

1. The U.S. Army Corps of Engineers has determined that this rule is not a major rule within the meaning of Executive Order 12866 and is in accordance with the exemption provided military functions.

2. This rule has been reviewed under the Regulatory Flexibility Act (Pub. L. 96–354) which requires preparation of a regulatory flexibility analysis for any regulation that will have a significant economic impact on a substantial number of small entities, i.e., small businesses, small government jurisdictions. We do not believe that the establishment of these rules will have any negative impacts on small entities because the procedures codified here will only serve to eliminate errors and confusion about the applicability of the 1983 North American Datum. Finally, no reporting or record-keeping requirements are imposed on any small entity as the result of this amendment to the danger zone/restricted area regulations. Therefore, we have determined that this rule will not have a significant economic impact on a substantial number of small entities and a regulatory flexibility analysis is not warranted.

List of Subjects in 33 CFR Part 334

Navigation, Waterways, Transportation.

Accordingly, we are amending Part 334 as follows:

PART 334—DANGER ZONE AND RESTRICTED AREA REGULATIONS

1. The authority citation for Part 334 continues to read as follows:

Authority: (40 Stat. 266; 33 U.S.C. 1) and (40 Stat. 892; 33 U.S.C. 3).

2. Section 334.6 *Datum* is added as follows:

§ 334.6 Datum.

(a) Geographic coordinates expressed in terms of latitude or longitude, or both, are not intended for plotting on maps or charts whose reference horizontal datum is the North American Datum of 1983 (NAD 83), unless such geographic coordinates are expressly labeled NAD 83. Geographic coordinates without the NAD 83 reference may be plotted on maps or charts referenced to NAD 83 only after application of the appropriate corrections that are published on the particular map or chart being used.

(b) For further information on NAD 83 and National Service nautical charts please contact: Director, Coast Survey (N/CG2), National Ocean Service, NOAA, 1315 East-West Highway, Station 6147, Silver Spring, MD 20910–3282.

Dated: March 15, 1995.

Stanley G. Genega,

Major General, U.S. Army, Director of Civil Works.

[FR Doc. 95–7208 Filed 3–22–95; 8:45 am]

BILLING CODE 3710–92–M

ENVIRONMENTAL PROTECTION AGENCY

40 CFR Part 52

[IL115–1–6791a; FRL–5166–1]

Approval and Promulgation of Implementation Plans; Revision to the Illinois State Implementation Plan for Ozone

AGENCY: Environmental Protection Agency (USEPA).

ACTION: Direct final rule.

SUMMARY: The USEPA approves the State Implementation Plan (SIP) revision request submitted by the State of Illinois on October 25, 1994, for the purpose of lowering the Reid Vapor Pressure (RVP) of gasoline from 9.0 pounds per square inch (psi) to 7.2 psi for the Metro-East St. Louis (Metro-East) ozone nonattainment area which includes Madison, Monroe, and St. Clair Counties. The rationale for the approval is set forth in this direct final rule; additional information is available at the address indicated below. In the proposed rules section of this **Federal Register**, USEPA is proposing approval of and soliciting public comment on this requested SIP revision. If adverse comments are received on this direct final rule, USEPA will withdraw this direct final rule and address the comments received in a subsequent final rule on the related proposed rule which is being published in the proposed rules section of this **Federal Register**. No additional opportunity for public comment will be provided. Unless this direct final rule is withdrawn no further rulemaking will occur on this requested SIP revision.

DATES: This final rule is effective on May 22, 1995, unless notice is received by April 24, 1995, that someone wishes to submit adverse comments. If the effective date is delayed, timely notice will be published in the **Federal Register**.

ADDRESSES: Written comments can be mailed to: J. Elmer Bortzer, Chief, Regulation Development Section (AR–18J), Regulation Development Branch, Air and Radiation Division, U.S. Environmental Protection Agency, 77 West Jackson Boulevard, Chicago, Illinois 60604.

Copies of the USEPA's technical analysis (TSD) are available for inspection at the following address: (It is recommended that you telephone Francisco Acevedo at (312) 886–6061 before visiting the Region 5 Office.) U.S. Environmental Protection Agency, Region 5, Air and Radiation Division, 77

West Jackson Boulevard, Chicago, Illinois 60604.

A copy of the RVP SIP revision is available for inspection at: Office of Air and Radiation (OAR), Docket and Information Center (Air Docket 6102), Room 1500, U.S. Environmental Protection Agency, 401 M Street, SW., Washington, DC 20460.

FOR FURTHER INFORMATION CONTACT: Francisco Acevedo (312) 886–6061.

SUPPLEMENTARY INFORMATION:

I. Background

The USEPA first proposed to regulate gasoline RVP in 1987 (52 FR 31274). Reid vapor pressure is a measure of a fuel's volatility; the higher the RVP the faster a fuel evaporates. Emissions of Volatile Organic Compounds (VOC) react with other pollutants, such as oxides of nitrogen, to form ozone. Ozone formation is most active during the summer months because the chemical reactions involved rely on direct sunlight and high ambient temperatures. Thus, regulations limiting fuel RVP are designed to protect human health by reducing ozone formation and human exposure.

USEPA's gasoline RVP proposal resulted in a two-phased final regulation which Congress incorporated into the Clean Air Act (Act) in section 211(h). Phase I of the regulation took effect in 1990 (54 FR 11868) for the years 1990 and 1991. The second phase of the regulation became effective in 1992 (55 FR 23658). The rule divides the continental United States into two control regions, Class B and Class C. Generally speaking, the Class B States are the warmer southern and western states, such as Missouri; and Class C States are the cooler northern states, such as Illinois. The Phase II regulation limits the volatility of high ozone season gasoline to 9.0 psi RVP for Class C areas and limits Class B ozone nonattainment areas to 7.8 psi RVP. Therefore, the Missouri counties within the St. Louis ozone nonattainment area are required to meet the 7.8 psi RVP standard while the Illinois counties have a 9.0 psi RVP limit.

State governments are generally preempted under section 211(c)(4)(A) of the Act from requiring that any or all areas in a State meet a volatility standard more stringent than the federal standard.[1] However, under 211(c)(4)(C) a State can require a more stringent standard in its SIP if the more stringent standard is necessary to achieve the National Ambient Air Quality Standard (NAAQS) that the SIP implements in a particular nonattainment area. The State can make this necessity showing by providing evidence that no other measures exist that would bring about timely attainment, or that such measures exist and are technically possible to implement, but are unreasonable or impracticable. If a State makes this showing, it can lower the volatility to whatever standard is necessary in the nonattainment area(s).

II. State Submittal

Section 182(b)(1) of the Act requires all moderate and above ozone nonattainment areas to achieve a 15 percent reduction of 1990 emissions of volatile organic material by 1996. The Metro-East area is classified as ''Moderate'' nonattainment for ozone, and as such is subject to the 15 percent Rate of Progress (ROP) requirement.

The Illinois Environmental Protection Agency (IEPA) developed and submitted a plan to USEPA on November 22, 1994, outlining the VOC emission control measures that the State will implement in order to satisfy the 15 percent ROP requirements. USEPA is currently reviewing the plan. One of the measures identified in the Metro-East plan was an RVP limit of 7.8 psi. The Metro-East ozone nonattainment area includes Madison, Monroe, and St. Clair Counties. The 7.8 psi RVP level was originally chosen to coincide with the gasoline volatility requirement for the adjacent St. Louis, Missouri area. However, in December 1993, the Missouri Department of Natural Resources (DNR) proposed lowering the St. Louis area gasoline RVP to 7.2 psi. Therefore, in order to maintain consistency within the area, IEPA proposed a similar 7.2 psi RVP limit. On April 22, 1994, IEPA filed the proposed 7.2 psi RVP rules with the Illinois Pollution Control Board (Board). A public hearing on the rules was held on June 17, 1994, in Chicago, Illinois, and on September 5, 1994, the Board adopted a Final Opinion and Order for the proposed amendments. The rules became effective on September 21, 1994, and they were published in the Illinois State Register on October 7, 1994. The IEPA formally submitted the RVP rule to USEPA on October 25, 1994, as a revision to the Illinois ozone SIP.

Illinois has reviewed all reasonable control measures and calculated the total reductions that it could achieve through these measures. The 15 percent ROP modeling has shown that limiting the RVP of gasoline to 7.2 psi reduces emissions in the Metro-East area by approximately 8.5 tons per day or 26 percent of the total reduction needed in the area to meet the 15 percent ROP requirement and to attain the NAAQS for ozone. Evaluation of the ROP modeling has shown that the Metro-East area will not be able to demonstrate attainment without controls that achieve this quantity of emission reduction. Illinois has selected the RVP control because there are no other reasonable and practicable emission control options available for the area capable of achieving this level of emission reduction. In determining whether other control measures were unreasonable or impracticable, Illinois considered such factors as cost-effectiveness, unpopularity with the public, need for consistent RVP standards across the greater metropolitan area, and the time frame in which such reductions can be achieved. (See February 9, 1995 TSD for a more detailed discussion of this analysis).

III. Analysis of Rule

The Illinois RVP rule amends 35 Ill. Adm. Code Part 219 Subpart A and Subpart Y. The RVP rule limits the volatility of gasoline sold in Madison, Monroe, and St. Clair Counties to 7.2 psi RVP during the control period beginning in 1995. The adopted control period included in the rule is June 1 to September 15 for retail outlets and wholesale consumers, and May 1 to September 15 for all others. The rule grants a 1 psi waiver for ethanol-blended gasolines that have an ethanol content between 9 and 10 percent by volume. In addition the Illinois RVP rule requires all parties involved with the marketing of gasoline to maintain records indicating that the volatility of each gasoline shipment is in compliance with the 7.2 psi RVP standard. The control period, ethanol blend waiver, and recordkeeping requirements are all consistent with the Act and USEPA's final RVP rule (CAA § 211(h); 40 CFR 80.27).

Gasoline sampling and testing to assure compliance with the regulation will be performed by the Illinois Department of Agriculture. Sampling will be performed in accordance with the procedures described by USEPA in its gasoline volatility regulations in 40 CFR 80 appendix D. Gasoline volatility and ethanol content tests will be performed following procedures described by USEPA in 40 CFR 80 appendix E and appendix F, respectively. Gasoline analysis results will be forwarded to the IEPA for compliance assurance and the preparation of enforcement actions. The

[1] USEPA promulgated the RVP regulations under both section 211(c) and section 211(h). States are generally preempted under section 211(c)(4)(A) from requiring fuel standards nonidentical to Federal standards promulgated under section 211(c)(1).

Illinois Environmental Protection Act (Illinois Act), section 42(a), states that any person that violates any provision of this Illinois Act or any regulation adopted by the Board, or any permit or term or condition thereof, or that violates any determination or order of the Board pursuant to this Act, shall be liable to a civil penalty not to exceed $50,000 for the violation and an additional $10,000 for each day for which the violation continues. In that this submittal is a regulation adopted by the Board, a violation of which subjects the violator to penalties under section 42(a), the submittal contains sufficient enforcement penalties for approval.

IV. Final Rulemaking Action

The USEPA approves the SIP revision submitted by the State of Illinois. The State of Illinois has submitted a SIP revision that includes enforceable state regulations which are consistent with Federal requirements. The State has also committed to perform enforcement inspections on at least 20 percent of the regulated stations during the first year of enforcement. Substantial penalties that will provide an adequate incentive for the regulated industry to comply and are no less than the expected cost of compliance are included in current Pollution Control Board Regulation. USEPA is, therefore, approving this submittal.

Procedural Background

Because USEPA considers this action noncontroversial and routine, the Agency is approving it without prior proposal. The action will become effective on May 22, 1995. However, if the USEPA receives adverse comments by April 24, 1995, then the USEPA will publish a notice that withdraws the action, and will address the comments received in response to this direct final rule in the final rule on the requested SIP revision, which has been proposed for approval in the proposed rules section of this **Federal Register**. The comment period will not be extended or reopened.

This action has been classified as a Table 2 action by the Regional Administrator under the procedures published in the **Federal Register** on January 19, 1989 (54 FR 2214–2225), as revised by an October 4, 1993, memorandum from Michael H. Shapiro, Acting Assistant Administrator for Air and Radiation. The Office of Management and Budget (OMB) has exempted this regulatory action from Executive Order 12866 review.

Nothing in this action should be construed as permitting or allowing or establishing a precedent for any future request for revision to any SIP. Each request for revision to any SIP shall be considered separately in light of specific technical, economic, and environmental factors and in relation to relevant statutory and regulatory requirements.

Under the Regulatory Flexibility Act, 5 U.S.C. 600 et seq., USEPA must prepare a regulatory flexibility analysis assessing the impact of any proposed or final rule on small entities. 5 U.S.C. 603 and 604. Alternatively, USEPA may certify that the rule will not have a significant impact on a substantial number of small entities. Small entities include small businesses, small not-for-profit enterprises, and government entities with jurisdiction over populations of less than 50,000.

SIP approvals under section 110 and subchapter I, part D of the Act do not create any new requirements, but simply approve requirements that the State is already imposing. Therefore, because the Federal SIP approval does not impose any new requirements, I certify that it does not have a significant impact on any small entities affected. Moreover, due to the nature of the Federal-State relationship under the Act, preparation of a regulatory flexibility analysis would constitute Federal inquiry into the economic reasonableness of State action. The Act forbids USEPA to base its actions concerning SIPs on such grounds. *Union Electric Co.* v. *U.S. Environmental Protection Agency*, 427 U.S. 246, 256–66 (S.Ct. 1976); 42 U.S.C. 7410(a)(2).

Under Section 307(b)(1) of the Clean Air Act, petitions for judicial review of this action must be filed in the United States Court of Appeals for the appropriate circuit by May 22, 1995. Filing a petition for reconsideration by the Administrator of this final rule does not affect the finality of this rule for the purposes of judicial review nor does it extend the time within which a petition for judicial review may be filed, and shall not postpone the effectiveness of such rule or action. This action may not be challenged later in proceedings to enforce its requirements. (See Section 307(b)(2).)

List of Subjects in 40 CFR Part 52

Environmental protection, Air pollution control, Hydrocarbon, Incorporation by reference, Ozone.

Dated: February 23, 1995.

Robert Springer,

Acting Regional Administrator.

For the reasons stated in the preamble, part 52, chapter I, title 40 of the Code of Federal Regulations is amended as follows:

PART 52—[AMENDED]

1. The authority citation for part 52 continues to read as follows:

Authority: 42 U.S.C. 7401–7671q.

Subpart O—Illinois

2. Section 52.720 is amended by adding paragraph (c)(109) to read as follows:

§ 52.720 Identification of plan.

* * * * *

(c) * * *

(109) On October 25, 1994, Illinois submitted a regulation that reduced the maximum allowable volatility for gasoline sold in the Metro-East St. Louis ozone nonattainment area, which includes Madison, Monroe, and St. Clair Counties, to 7.2 psi during the summer control period. The summer control period is June 1 to September 15 for retail outlets and wholesale consumers, and May 1 to September 15 for all others.

(i) Incorporation by reference. Illinois Administrative Code Title 35: Environmental Protection, Subtitle B: Air Pollution, Chapter I: Pollution Control Board, Subchapter c: Emissions Standards and Limitations for Stationary Sources, Part 219 Organic Material Emission Standards and Limitations for Metro East Area,

(A) Section 219.112 Incorporation by Reference. Amended at 18 Ill. Reg. 14987. Effective September 21, 1994.

(B) Section 219.585 Gasoline Volatility Standards. Amended at 18 Ill. Reg. 14987. Effective September 21, 1994.

[FR Doc. 95–7108 Filed 3–22–95; 8:45 am]

BILLING CODE 6560–50–P

---

40 CFR Part 52

[OH45–1–5974a; FRL–5169–2]

Approval and Promulgation of Implementation Plans; Ohio

AGENCY: United States Environmental Protection Agency (USEPA).

ACTION: Direct final rule.

SUMMARY: The USEPA is approving revisions to the Ohio State Implementation Plan (SIP) adopted by the Ohio Environmental Protection Agency (OEPA) on March 15, 1993, and December 30, 1994. The OEPA submitted these revisions to the USEPA on June 7, 1993, and February 17, 1995. The revisions concern Ohio Administrative Code (OAC) Chapter 3745–21, ''Carbon Monoxide, Photochemically Reactive Materials,

Hydrocarbons, and Related Materials Standards.'' The USEPA has evaluated the revisions to Rules 01, 04, 09, and 10 and is approving the requested revisions. The USEPA's action is based upon a revision request which was submitted by the State to satisfy the requirements of the Clean Air Act.

DATES: This final rule is effective May 22, 1995 unless adverse or critical comments are received by April 24, 1995. If the effective date is delayed, timely notice will be published in the **Federal Register**.

ADDRESSES: Written comments should be addressed to: William L. MacDowell, Chief, Regulation Development Section, Air Enforcement Branch (AE–17J), United States Environmental Protection Agency, 77 West Jackson Boulevard, Chicago, Illinois 60604.

Copies of the SIP revision request and USEPA's analysis are available for public inspection during normal business hours at the following addresses: (It is recommended that you telephone Bonnie Bush at (312) 353–6684, before visiting the Region 5 Office.)

United States Environmental Protection Agency, Region 5, Air and Radiation Division, 77 West Jackson Boulevard, Chicago, Illinois 60604; Office of Air and Radiation (OAR), Docket and Information Center (Air Docket 6102), room M1500, United States Environmental Protection Agency, 401 M Street SW., Washington, DC 20460; and Public Information Reference Unit, Environmental Protection Agency, 401 M Street SW., Washington, DC 20460.

FOR FURTHER INFORMATION CONTACT: Bonnie Bush, Air Enforcement Branch, Regulation Development Section (AE–17J), U.S. Environmental Protection Agency, Region 5, Chicago, Illinois 60604, (312) 353–6684.

SUPPLEMENTARY INFORMATION:

I. Background

On November 15, 1990, amendments to the 1977 Clean Air Act (CAA) were enacted. Pub. L. 101–549, 104 Stat. 2399, codified at 42 U.S.C. 7401–7671q. Under the pre-amended CAA, ozone nonattainment areas were required to adopt reasonably available control technology (RACT) rules for sources of volatile organic compound (VOC) emissions. VOC's contribute to the production of ground level ozone and smog. These rules were required as part of an effort to achieve the National Ambient Air Quality Standard for ozone.

RACT, as defined in 40 CFR 51.100(o), means devices, systems process modifications, or other apparatus or techniques that are reasonably available taking into account (1) the necessity of imposing such controls in order to attain and maintain a national ambient air quality standard, (2) the social, environmental and economic impact of such controls, and (3) alternative means of providing for attainment and maintenance of such standard. The USEPA issued three sets of control technique guidelines (CTGs) documents, establishing a ''presumptive norm'' for RACT for various categories of VOC sources. The three sets of CTGs were: (1) Group I, issued before January 1978 (15 CTGs); (2) Group II, issued in 1978 (9 CTGs); and (3) Group III, issued in the early 1980's (5 CTGs). Those sources not covered by a CTG were called non-CTG sources. The USEPA determined that a given nonattainment area's SIP-approved attainment date established which RACT rules the area needed to adopt and implement. Under pre-amended section 172(a)(1), ozone nonattainment areas were generally required to attain the ozone standard by December 31, 1982. Those areas that projected attainment by that date were required to adopt RACT for sources covered by the Group I and II CTGs. Those areas that sought an extension of the attainment date under section 172(a)(2) to as late as December 31, 1987, were required to adopt RACT for all CTG sources and for all major (i.e., 100 ton per year or more of VOC emissions) non-CTG sources.

Section 182(b)(2) of the amended Act requires States to adopt RACT rules for all areas designated nonattainment for ozone and classified as moderate or above. There are three parts to the section 182(b)(2) RACT requirement: (1) RACT for sources covered by an existing CTG, i.e., a CTG issued prior to the enactment of the Clean Air Act Amendments of 1990; (2) RACT for sources covered by a post-enactment CTG; and (3) all major sources not covered by a CTG (note: this includes unregulated emission units within a source if they total more than 100 tons per year in the aggregate). Section 182(b)(2) requires nonattainment areas that previously were exempt from RACT requirements to ''catch up'' to those nonattainment areas that became subject to those requirements during an earlier period. In addition, it requires newly designated ozone nonattainment areas to adopt RACT rules consistent with those for previously designated nonattainment areas.

Under the pre-amended Act, the USEPA designated the Dayton-Springfield, Cincinnati, Youngstown-Warren, Canton, Toledo, Cleveland, and Akron areas and Ashtabula County as nonattainment. The Dayton-Springfield area included Clark, Greene, Miami, and Montgomery Counties; the Cincinnati area included Clermont, Hamilton, Warren, and Butler Counties; the Youngstown-Warren area included Mahoning and Trumbull Counties; the Canton area included Stark County; the Toledo area included Lucas County; and the Cleveland and Akron areas included Portage, Summit, Cuyahoga, Geauga, Lake, and Lorain Counties. Ohio established a pre-enactment attainment date of December 31, 1982, for the Dayton-Springfield, Youngstown-Warren, Canton, Toledo and Akron nonattainment areas and December 31, 1987, for the Cleveland and Cincinnati nonattainment areas. Therefore, Dayton-Springfield, Youngstown-Warren, Canton, Toledo, and Akron were required to adopt RACT for Groups I and II sources, and the Cincinnati and Cleveland areas were required to adopt RACT for Groups I, II, III, and major non-CTG sources. Ashtabula County was designated rural nonattainment and was required to adopt RACT for Groups I and II sources.

However, none of the above areas attained the ozone standard by their respective approved attainment dates. On May 26, 1988, and November 8, 1989, the USEPA notified the Governor of Ohio that portions of the SIP were inadequate to attain and maintain the ozone standard and requested that deficiencies in the existing SIP be corrected. These notifications are referred to as USEPA's SIP Calls). In amended section 182(a)(2)(A) of the CAA, Congress statutorily adopted the requirement that pre-enactment ozone nonattainment areas that retained their designation of nonattainment and were classified as marginal or above fix their deficient RACT rules for ozone by May 15, 1991. The Dayton-Springfield, Cincinnati, Cleveland-Akron-Lorain and Toledo areas and Ashtabula County retained their designation of nonattainment and were classified as moderate; the Youngstown-Warren and Canton areas retained their designation of nonattainment and were classified as marginal. 56 FR 56694 (Nov. 6, 1991). The State submitted revisions to meet the RACT fix-up requirement for all the above areas, and the USEPA has taken a final action of partial approval, partial disapproval, and partial limited approval/limited disapproval of that submittal. 59 FR 23796 (May 9, 1994).

In addition to the pre-enactment nonattainment areas retaining their nonattainment designations, the USEPA also extended the boundaries of the Toledo and Cleveland-Akron-Lorain

nonattainment areas to include Wood County in the Toledo area and Ashtabula and Medina Counties in the Cleveland-Akron-Lorain area. 56 FR 56694 and 57 FR 56762 (November 30, 1992). Wood and Medina Counties were previously not subject to CAA RACT requirements. Ashtabula County was previously subject to Groups I and II RACT and to the section 182(a)(2)(A) RACT fix-up requirement. Therefore, these portions of the extended nonattainment area also are subject to the RACT requirements of section 182(b)(2), which requires the State, for these extended portions of the Cleveland-Akron-Lorain and Toledo nonattainment areas, to submit RACT rules covering all pre-enactment CTGs, to identify all sources the State anticipates will be covered by a post-enactment CTG, and to submit non-CTG rules for all remaining major sources (100 tons per year) of VOC emissions (Appendix E to the General Preamble, 57 FR 18077, April 28, 1992).

The following is the USEPA's evaluation and rulemaking action for the submitted revisions to Ohio Administrative Code (OAC) Chapter 3745–21 ''Carbon Monoxide Photochemically Reactive Materials, Hydrocarbons, and Related Materials Standards,'' including the following amendments: 3745–21–01, Definitions; 3745–21–04, Attainment Dates and Compliance Time Schedules; 3745–21–09, Control of Emissions of Volatile Organic Compounds from Stationary Sources; and 3745–21–10, Compliance Test Methods and Procedures.

II. USEPA Evaluation and Action

In determining the approvability of a VOC rule, the USEPA must evaluate the rule for consistency with the requirements of the Act and USEPA regulations, as found in section 110 and Part D of the Act and 40 CFR part 51 (Requirements for Preparation, Adoption, and Submittal of Implementation Plans). The USEPA interpretation of these requirements, which forms the basis for this action, appears in various USEPA policy guidance documents discussed in this Notice.

For the purpose of assisting State and local agencies in developing RACT rules, the USEPA prepared a series of CTG documents. The CTG's are based on the underlying requirements of the Act and specify the presumptive norms for RACT for specific source categories. The USEPA has not yet developed CTG's to cover all sources of VOC emissions. Further interpretations of USEPA policy are found in those portions of the proposed Post-1987 ozone and carbon monoxide policy that concern RACT (52 FR 45044, November 24, 1987) and ''Issues Relating to VOC Regulation Cutpoints, Deficiencies, and Deviation, Clarification to Appendix D of November 24, 1987, **Federal Register** Notice'' (Blue Book). Notice of availability of the Blue Book was published in the **Federal Register** on May 25, 1988. In general, these guidance documents have been set forth to ensure that VOC rules are fully enforceable and strengthen the SIP. A detailed analysis of the submittals and discussion of the USEPA's basis for this action is contained in a February 21, 1995, USEPA Technical Support Document (TSD).

This Notice addresses VOC regulations applying to CTG source categories contained in Ohio's June 7, 1993, and February 17, 1995, submittals and one site-specific non-CTG rule applying to the British Petroleum Company, Toledo Refinery (BP Oil). Because of the size of this submittal, a single rulemaking action on the entire submittal would further delay Federal enforceability of any part of it. Therefore, this Notice evaluates and takes action on only that portion of the submittal applying to sources belonging to the following CTG source categories:

Automobiles and Light-Duty Truck Coating
Can Coating
Coil Coating
Paper Coating
Fabric Coating
Vinyl Coating
Metal Furniture Coating
Magnet Wire Coating
Large Appliance Coating
Bulk Gasoline Plants
Bulk Gasoline Terminals
Gasoline Tank Trucks
Storage of Petroleum Liquids in Fixed Roof Tanks
Petroleum Refinery Sources
Cutback and Emulsified Asphalts in Road Construction and Maintenance
Solvent Metal Cleaning
Gasoline Dispensing Facilities
Leaks from Petroleum Refinery Equipment
Miscellaneous Metal Parts Coating
Synthesized Pharmaceutical Manufacturing
Rubber Tire Manufacturing Facilities
Printing
Petroleum Liquid Storage in External Floating Roof Tanks
Petroleum Solvent Dry Cleaning Facilities
Leaks from Process Units that Produce Organic Chemicals
Air Oxidation Processes in Organic Chemical Manufacture

The rules in the submittal that apply to non-CTG sources other than BP Oil are addressed in a separate rulemaking action.

No deficiencies have been identified in the rules subject to this rulemaking action. The February 1995 USEPA TSD discusses the bases for approval of the portions of the submittals subject to this action and lists the references, guidance documents, and correspondence used in the evaluation of the submittals.

Alternative Applicability Cutoff in OAC Rule 3745–21–09(U)

OAC 3745–21–09(U) is Ohio's rule for miscellaneous metals coating facilities. Rule (U), paragraph (2)(e)(i) exempts sources in the Dayton nonattainment area which use eight or less gallons of coating per day per line (gpd/line), and paragraph (2)(e)(ii) exempts sources in the Canton, Toledo, Cleveland, Cincinnati, and Youngstown nonattainment areas which use 10 or less gpd/line. The USEPA CTG document for miscellaneous metal coaters does not define an applicability cutoff specific to the source category, so the general RACT cutoff of 15 lb VOC per day actual emissions before control for all sources in the source category at a given facility, as described in the Blue Book, applies to these facilities. While Rule (U), paragraph (2)(h), includes the USEPA RACT cutoff, the exemptions in (2)(e) make possible the exemption of sources with emissions above the RACT cutoff. The Blue Book provides for approval of alternative applicability cutoffs if the State demonstrates that the allowable emissions under the alternative cutoff are within five percent of the allowable emissions under the USEPA RACT cutoff—a ''five percent equivalency demonstration.''

The OEPA submitted complete five percent demonstrations (summary calculations and supporting documentation) for the Canton, Dayton, Toledo, and Youngstown areas. Review of the complete five percent demonstrations shows that the alternative cutoffs for the Canton, Dayton, Toledo and Youngstown, nonattainment areas are approvable. Based on emissions data for 1990 or earlier, the allowable VOC emissions using the alternative cutoffs are, in each case, within five percent of the allowable VOC emissions using the USEPA RACT cutoff. The calculation of the demonstrations was consistent with USEPA policy, and the calculations were adequately supported by documentation of VOC coating content. The results of the demonstrations are summarized in the following table:

Nonattainment area	Allowable VOC, lb/day, RACT cutoff	Allowable VOC, lb/day, Ohio cutoff	Percent Difference
Canton	2,950.54	3,062.26	+3.79
Dayton	18,751.82	19,615.44	+4.61
Toledo	5,385.85	5,599.37	+3.96
Youngstown	10,158.50	10,490.85	+3.27

The OEPA also submitted summary calculations, without supporting documentation, showing that a three or less gpd/line cutoff for the Cincinnati and Cleveland nonattainment areas results in emissions that are within five percent of the emissions allowed by the RACT cutoff. A three or less gpd/line cutoff has not been adopted by Ohio, and the OEPA has requested that the 10 or less gpd/line cutoff in Rule (U)(2)(e)(ii), contained in the February 1995 submittal, not be made part of the ozone SIP for the Counties of Ashtabula, Butler, Clermont, Cuyahoga, Geauga, Hamilton, Lake, Lorain, Medina, Portage, Summit, and Warren, which constitute the Cincinnati and Cleveland nonattainment areas. The OEPA has requested that USEPA delay action on the rule as it applies in Cincinnati and Cleveland because the OEPA intends to adopt a three or less gpd/line cutoff for the Cincinnati and Cleveland nonattainment areas, and submit this cutoff, accompanied by supporting documentation, to the USEPA as a SIP revision request. Therefore, the USEPA is approving this rule only as it applies to Canton, Dayton, Toledo, and Youngstown. The USEPA will take further action on this rule as it applies to Cincinnati and Cleveland when the OEPA submits the revised rule.

The revised Rule (U) also corrects a deficient emission limit, removes vague and unenforceable language, and adds clarifying language necessary for consistency with RACT, thereby strengthening the SIP.

Rubber Tire Manufacturing Exemptions and Technical Support

The June 1993 submittal contains a version of OAC 3745–21–09(X), Ohio's rule for rubber tire manufacturing facilities, which includes new exemptions for two facilities: the Goodyear Tire and Rubber Company facility at 200 S. Martha Avenue, Akron, Ohio, and the Denman Tire Corporation facility in Leavittsburg, Ohio. There are two ways to exempt a facility from applicable RACT requirements: (1) The State can demonstrate that the exemption meets existing USEPA exemption policy for the specific source category, or (2) the State can demonstrate that RACT as defined by the USEPA is infeasible or unreasonable for the facility being exempted. The USEPA exemption policy for rubber tire manufacturing (the Blue Book) states that RACT ''does not apply to the production of specialty tires for antique or other vehicles when produced on an irregular basis or with short production runs only if these tires are produced on equipment separate from normal production lines for passenger type tires.''

While the OEPA included technical documentation for these exemptions in the June 1993 submittal, it did not sufficiently support either of the above demonstrations. The inadequacy of the technical support was communicated to the OEPA in a June 1994 comment letter, and draft paragraphs from the USEPA TSD were sent to the OEPA via facsimile to facilitate subsequent discussions of unresolved issues. During these discussions, the USEPA asked the OEPA to consider the USEPA's draft model VOC rule language pertaining to applicability for rubber tire manufacturing facilities. The OEPA has eliminated the exemptions for Denman and Goodyear and incorporated the model rule applicability language in the February 1995 submittal. The USEPA now finds OAC Rule 3745–21–09(X) to be fully approvable.

Reconsideration of Previously Noted Deficiencies

Pursuant to discussions between the OEPA and the USEPA, the USEPA has reconsidered its position on some of the deficiencies cited in the Notice of Final Rulemaking (NFR) on two earlier VOC rules submittals from Ohio (May 9, 1994, 59 FR 23796). All but two of the retractions are described in a July 22, 1994, USEPA memorandum to the files; the remaining two reconsiderations warrant more detailed explanations, as follows:

1. Rule 3745–21–09(B), General provisions, paragraph (3)(f): The deficiency originally cited was that the rule must provide for daily, not monthly, recordkeeping to be consistent with RACT as defined by the USEPA and must be fully enforceable. The OEPA stated that an Ohio VOC source, Champion International, contacted USEPA Headquarters (HQ) on this issue, and HQ agreed that monthly recordkeeping is acceptable in this situation. This was not documented in the OEPA's June 1993 technical support, and Region 5 staff were not aware of this policy. The OEPA subsequently submitted a November 24, 1992, letter from John Calcagni, Director of the Air Quality Management Division, USEPA, to Robert A. Meyer, Jr., of a Columbus, Ohio, law firm, which supports the monthly recordkeeping requirement.

2. Rule 3745–21–09(EE), Air oxidation processes that produce organic chemicals: The deficiency originally cited was that the phrase ''good engineering practices'' in the exemption in paragraph (2)(a) is vague and unenforceable. The OEPA stated that the exemption language in paragraph (2)(a) was taken from the USEPA Control Techniques Guideline document on air oxidation processes. This was confirmed by USEPA staff, and we informed the OEPA that the final disapproval of this paragraph in the May 9, 1994, NFR (59 FR 23796) was an error, which is corrected by this action.

All of the other regulations cited as deficient in the May 9, 1994, NFR (59 FR 23796), have either been revised by the OEPA to correct the deficiency or reconsidered by the USEPA as discussed above, and all such regulations are now fully approvable.

Non-CTG Regulation for BP Oil

BP Oil, Toledo Refinery, is located in Lucas County, which is designated as moderate nonattainment for ozone. Prior to enactment of the CAA amendments, Lucas County was part of an area that had projected attainment by December 31, 1982, and therefore was subject to Group I and II CTG's only. Under section 182(b)(2), Lucas County is now subject to Group III CTG's and non-CTG RACT for major sources. BP Oil was identified by the OEPA as a major source, already subject to OAC 3745–21–09(L), (M), (T), and (Z), which regulate the source categories Fixed Roof Petroleum Tanks, Miscellaneous Refinery Sources, Leaks from Petroleum Refineries, and External Floating Roof Petroleum Tanks. On January 10, 1991,

the OEPA sent BP a letter requesting submittal by August 22, 1991, of a RACT study of all VOC sources not regulated by OAC 3745–21–09. BP hired ENSR Consulting and Engineering (ENSR) to perform this RACT study, which has been included in the technical support submitted by the OEPA for Rule 09(UU), the non-CTG rule for BP Oil.

A detailed description of the RACT study, a discussion of issues and their resolution, and the verbatim non-CTG rule language can be found in the February 1995 USEPA TSD. The control requirements established by OAC Rule 3745–21–09(UU) are acceptable and found to constitute RACT for the sources they control. The compliance deadlines for these controls as specified in OAC Rule 3745–21–04(C)(55) meet the section 182(b)(2) requirement; the latest compliance deadline is May 1, 1995. The RACT study and other technical support was reviewed in great detail by USEPA staff, and during the review process, many issues arose. These issues were resolved through discussions with OEPA staff and submittal of further technical support by the OEPA.

In an attempt to clarify the emissions picture at BP Oil, USEPA staff performed a detailed comparison between Ohio's 1990 base year inventory (currently under USEPA review) and the ''de minimis,'' ''negligible,'' and ''minor'' sources described in the RACT study. This comparison resulted in the identification of a number of sources in the inventory which appeared to require RACT evaluation. These sources were discussed one by one with OEPA staff, who, in summary, stated that most of the sources were subject to CTG regulations in Chapter 09. The USEPA accepts the State's assessment of these sources regarding their being subject to CTG regulations, and, therefore, USEPA staff did no further investigation of these sources. Ultimately, only the sources discussed in the USEPA's November 7, 1994, comments for the public record remained unresolved. On November 8, 1994, the USEPA received a letter from the OEPA stating that the 1990 base year inventory is in error in that the sources in question are not really VOC sources; therefore, no RACT evaluation is necessary. USEPA staff reviewing the inventory were notified of the errors and given a copy of the OEPA letter.

The USEPA finds Rule 09(UU) to be approvable.

RACT Studies

In response to the non-CTG RACT requirements of sections 182(a)(2)(A) and 182(b)(2) of the amended CAA, Ohio submitted RACT studies for ten facilities for which no rule development was performed. The OEPA concluded that the existing controls at these facilities constitute RACT and are federally enforceable. Two of the ten RACT studies were evaluated for the current rulemaking action: (1) the Sun Refining and Marketing Company in the Toledo nonattainment area, and (2) the General Motors Company (GMC) Delco Chassis Division in the Dayton nonattainment area. The evaluations and recommendations for these studies can be found in two USEPA TSDs, dated August 23, 1994 (Sun), and September 7, 1994 (GMC Delco). In summary, for Sun Oil, the USEPA believes that the existing controls at Sun Oil are federally enforceable and that they constitute RACT for this facility. For GMC Delco, the USEPA believes that the existing controls constitute RACT; however, at the time of the June 1993 submittal, they were not federally enforceable. The OEPA was made aware of this deficiency through several letters cited in the list of references in the February 1995 USEPA TSD. The February 1995 submittal includes a modified permit-to-install, which upon approval by the USEPA into the Ohio ozone SIP, fulfils the requirements of section 182(b)(2) of the amended CAA. The USEPA is approving the modified permit-to-install into the Dayton area ozone SIP as RACT.

General Preamble Issues

The General Preamble for the Implementation of Title I of the Clean Air Act Amendments of 1990 (57 FR 13497, April 16, 1992) gives guidance for implementation of Title I. For section 182(b)(2), the General Preamble states that States must submit negative declarations for those source categories for which they are not adopting CTG-based regulations, even if such negative declarations have been made for an earlier SIP (57 FR 13512). A negative declaration is a statement that, for a given source category, there are no facilities with sources in that source category in any of the Counties subject to the requirement. Ohio's June 7, 1993, submittal contains negative declarations for the source categories of polypropylene or high density polyethylene resin manufacturing, natural gas/gasoline processing plants, and surface coating of flat wood paneling. Ohio previously submitted negative declarations for the resin manufacturing and gas processing categories in 1986. The OEPA has resubmitted those declarations and reconfirmed that there are no facilities in Ohio subject to RACT in these categories. There is one plant in Ohio with a hardboard paneling finishing line, which was constructed after the issuance of the CTG for surface coating of flat wood paneling. The source, Abitibi-Price Corporation, is subject to a federally enforceable permit-to-install with requirements that are equivalent to the CTG requirements. The USEPA is approving that permit-to-install into the ozone SIP as RACT.

States must include in the section 182(b)(2) submittal a list of major sources that the State has identified as being potentially subject to post-enactment CTG documents to be issued for the source categories listed in Appendix E to the General Preamble. Supplement to the General Preamble (57 FR 18070, 18077, April 28, 1992). The State was again notified of this necessity in a January 15, 1993, letter from Valdas Adamkus, Regional Administrator, to Governor George Voinovich. This source list was not included in the June 7, 1993, submittal to the USEPA. The omission of the list from the June 1993 submittal was communicated to Ohio in an August 26, 1993, letter. On July 27, 1994, the USEPA Region 5 office received by facsimile a list of facilities, the source categories to which they belong, with the year of any RACT study that has been done. On February 21, 1995, the State submitted an updated list. The USEPA considers this list to satisfy the Appendix E guidelines pertaining to the list of sources due November 15, 1992.

Stage II

On October 20, 1994, a direct final rulemaking notice was published (59 FR 52911) partially approving the Stage II rule submitted on June 7, 1993. That rulemaking codified OAC 3745–21–09(DDD), the emissions standards portion of the rule. While the October 1994 notice discussed the compliance schedule and the test methods for Stage II, codification of these portions of the rule was inadvertently omitted. The USEPA is now approving OAC 3745–21–04(C)(64), the Stage II compliance schedule, and OAC 3745–21–10 (Q), (R), (S), and Appendices A, B, and C, the Stage II test methods, as submitted on June 7, 1993, into the Ohio ozone SIP.

III. Rulemaking Action

The USEPA has evaluated the State's submittal for consistency with the Act, USEPA regulations, and USEPA policy.

The USEPA has determined that the submitted CTG rules meet the Act's

requirements, and with this action approves, under section 110(k)(3), the following rules:

OAC 3745–21–01: (D)(6), (D)(8), (D)(45), (M)(8).

OAC 3745–21–04: (B); (C)(3)(c), (C)(4)(b), (C)(5)(b), (C)(6)(b), (C)(8) (b) and (c), (C)(9)(b), (C)(10)(b), (C)(19) (b), (c) and (d), (C)(28)(b), (C)(38), (C)(39), (C)(42), (C)(43), (C)(44), (C)(45), (C)(47), (C)(55), (C)(64) as submitted on June 7, 1993, (C)(65).

OAC 3745–21–09: (A), (C) through (L), (N) through (T), (X), (Y), (Z), (BB), (CC), (DD), (UU), Appendix A; (B) with the exception of (B)(3) (d) and (e) for the Cincinnati and Cleveland nonattainment areas; (U) with the exception of (U)(1)(h) statewide and (U)(2)(e)(ii) for the Cincinnati and Cleveland nonattainment areas.

OAC 3745–21–10: (A), (B), (C), (E), (O), as submitted in February 1995, and (Q), (R), (S), and Appendices A, B, and C as submitted in June 1993.

The Cincinnati and Cleveland nonattainment areas include the Ohio Counties of Ashtabula, Butler, Clermont, Cuyahoga, Geauga, Hamilton, Lake, Lorain, Medina, Portage, Summit, and Warren.

OAC 3745–21–01 (H), (Q), and (T); 3745–21–04(C) (38), (39), (42), (44), (45), (47), (49), (51) through (63), and (66), and (64) as submitted in June 1993; 3745–21–09 (FF) through (TT) and (VV) through (DDD); and 3745–21–10 (Q), (R), (S), and Appendices A and B as submitted in February 1995 are being addressed in separate rulemaking actions. Ohio requested that the USEPA not consider certain paragraphs for approval into the ozone SIP, including OAC 3745–21–09(B)(3) (d) and (e) and 09(U)(2)(e)(ii) for the Cleveland and Cincinnati nonattainment areas and 09(U)(1)(h) statewide. For these paragraphs, the appropriate previously approved rules stand as the federally approved SIP. The State included non-revised existing rules in the submittal, and such rules remain part of the current federally approved Ohio ozone SIP as they stand; therefore, no Federal rulemaking action is necessary.

The submitted permit-to-install for GMC Delco is approved into the Ohio ozone SIP.

The negative declarations made by Ohio for the source categories of high density polyethylene or polypropylene resin manufacturing, natural gas/gasoline processing plants, and surface coating of flat wood paneling are approved into the Ohio ozone SIP. The submitted permit-to-install for the Abitibi-Price Corporation is approved into the Ohio ozone SIP.

Submittal of a list of major stationary sources which will be subject to post-enactment CTG's for the source categories listed in Appendix E to the General Preamble are a necessary part of any submittal intended to satisfy section 182(b)(2) of the CAA. The USEPA is approving into the Ohio ozone SIP the list of facilities submitted on February 21, 1995.

IV. Comment and Approval Procedure

The USEPA is publishing this action without prior proposal because the USEPA views this action as a noncontroversial revision and anticipates no adverse comments. However, the USEPA is publishing a separate document in this **Federal Register** publication, which constitutes a ''proposed approval'' of the requested SIP revision and clarifies that the rulemaking will not be deemed final if timely adverse or critical comments are filed. The ''direct final'' approval shall be effective on May 22, 1995, unless the USEPA receives adverse or critical comments by April 24, 1995.

If the USEPA receives comments adverse to or critical of the approval discussed above, the USEPA will withdraw this approval before its effective date by publishing a subsequent **Federal Register** notice which withdraws this final action. All public comments received will then be addressed in a subsequent rulemaking notice. Please be aware that the USEPA will institute a second comment period on this action only if warranted by revisions to the rulemaking based on the comments received.

Any parties interested in commenting on this action should do so at this time. If no such comments are received, the USEPA hereby advises the public that this action will be effective on May 22, 1995.

Nothing in this action should be construed as permitting, allowing or establishing a precedent for any future request for revision to any SIP. The USEPA shall consider each request for revision to the SIP in light of specific technical, economic, and environmental factors and in relation to relevant statutory and regulatory requirements.

This action has been classified as a Table 2 action by the Regional Administrator under the procedures published in the **Federal Register** on January 19, 1989, (54 FR 2214–2225), as revised by an October 4, 1993, memorandum from Michael H. Shapiro, Acting Assistant Administrator for Air and Radiation. The Office of Management and Budget has exempted this regulatory action from Executive Order 12866 review.

Under the Regulatory Flexibility Act, 5 U.S.C. 600 *et seq.*, the USEPA must prepare a regulatory flexibility analysis assessing the impact of any proposed or final rule on small entities. (5 U.S.C. 603 and 604.) Alternatively, the USEPA may certify that the rule will not have a significant impact on a substantial number of small entities. Small entities include small businesses, small not-for-profit enterprises, and government entities with jurisdiction over populations of less than 50,000.

SIP approvals under section 110 and subchapter I, Part D of the CAA do not create any new requirements, but simply approve requirements that the State is already imposing. Therefore, because the Federal SIP-approval does not impose any new requirements, I certify that it does not have a significant impact on small entities affected. Moreover, due to the nature of the Federal-State relationship under the CAA, preparation of regulatory flexibility analysis would constitute Federal inquiry into the economic reasonableness of state action. The CAA forbids the USEPA to base its actions concerning SIPs on such grounds. *Union Electric Co.* v. *U.S. EPA*, 427 U.S. 246, 256–66 (S.Ct. 1976); 42 U.S.C. section 7410(a)(2).

Under section 307(b)(1) of the Clean Air Act, petitions for judicial review of this action must be filed in the United States Court of Appeals for the appropriate circuit by May 22, 1995. Filing a petition for reconsideration by the Administrator of this final rule does not affect the finality of this rule for the purposes of judicial review nor does it extend the time within which a petition for judicial review may be filed, and shall not postpone the effectiveness of such rule or action. This action may not be challenged later in proceedings to enforce its requirements. (See section 307(b)(2).)

List of Subjects in 40 CFR Part 52

Environmental protection, Air pollution control, Hydrocarbons, Incorporation by reference, Intergovernmental relations, Ozone, Reporting and recordkeeping requirements, Volatile organic compounds.

Dated: February 23, 1995.

Robert Springer,

Acting Regional Administrator.

Part 52, chapter I, title 40 of the Code of Federal Regulations is amended as follows:

PART 52—[AMENDED]

1. The authority citation for part 52 continues to read as follows:

Authority: 42 U.S.C. 7401–7671q.

Subpart KK—Ohio

2. Section 52.1870 is amended by adding paragraph (c)(103) and revising paragraph (c)(104) to read as follows:

§ 52.1870 Identification of plan.

* * * * *

(c) * * *

(103) On June 7, 1993, and February 17, 1995, the Ohio Environmental Protection Agency (OEPA) submitted revisions to the State Implementation Plan (SIP) for ozone. The revisions include one new non-Control Technique Guideline volatile organic compound (VOC) rule, corrections to existing VOC rules, and two permits-to-install.

(i) Incorporation by reference.

(A) OEPA Ohio Administrative Code (OAC) Rule 3745–21–01, Definitions, Paragraphs (B)(1), (B)(2), (B)(6), (D)(6), (D)(8), (D)(22), (D)(45), (D)(48), (D)(58), (M)(8); effective January 17, 1995.

(B) OEPA OAC Rule 3745–21–04, Attainment Dates and Compliance Time Schedules, Paragraphs (B), (C)(3)(c), (C)(4)(b), (C)(5)(b), (C)(6)(b), (C)(8) (b) and (c), (C)(9)(b), (C)(10)(b), (C)(19) (b), (c), and (d), (C)(28)(b), (C)(38), (C)(39), (C)(42), (C)(43), (C)(44), (C)(45), (C)(47), (C)(55), (C)(65); effective January 17, 1995.

(C) OEPA OAC Rule 3745–21–09, Control of Emissions of Volatile Organic Compounds from Stationary Sources, Paragraphs (A), (C) through (L), (N) through (T), (X), (Y), (Z), (BB), (CC), (DD), (UU), Appendix A; effective January 17, 1995.

(D) OEPA OAC Rule 3745–21–09, Control of Emissions of Volatile Organic Compounds from Stationary Sources, Paragraph (B) except (B)(3)(d) and (e) for the Ohio Counties of Ashtabula, Butler, Clermont, Cuyahoga, Geauga, Hamilton, Lake, Lorain, Medina, Portage, Summit, and Warren; effective January 17, 1995.

(E) OEPA OAC Rule 3745–21–09, Control of Emissions of Volatile Organic Compounds from Stationary Sources, Paragraph (U) except (U)(1)(h) statewide and (U)(2)(e)(ii) for the Ohio Counties of Ashtabula, Butler, Clermont, Cuyahoga, Geauga, Hamilton, Lake, Lorain, Medina, Portage, Summit, and Warren; effective January 17, 1995.

(F) OEPA OAC Rule 3745–21–10, Compliance Test Methods and Procedures, Paragraphs (A), (B), (C), (E), (O); effective January 17, 1995.

(G) Permit to Install, Application Number 04–204, for Abitibi-Price Corporation, APS Premise Number 0448011192. The date of issuance is July 7, 1983.

(H) Permit to Install, Application Number 08–3273, for General Motors Corporation Delco Chassis Division, APS Premise Number 0857040935. The date of issuance is February 13, 1995.

(ii) Additional material.

(A) On June 7, 1993, the OEPA submitted negative declarations for the source categories of polypropylene or high density polyethylene resin manufacturing, natural gas/gasoline processing plants, and surface coating of flat wood paneling. These negative declarations are approved into the Ohio ozone SIP.

(B) On February 21, 1995, the OEPA submitted a list of facilities subject to the post-enactment source categories listed in Appendix E to the General Preamble. 57 FR 18070, 18077 (April 28, 1992). This list is approved into the Ohio ozone SIP.

(104) On June 7, 1993, the Ohio Environmental Protection Agency (OEPA) submitted a revision request to Ohio's ozone SIP for approval of the State's Stage II vapor recovery program. The Stage II program requirements apply to sources in the following areas: Cincinnati-Hamilton; Cleveland-Akron-Lorain; and Dayton-Springfield.

(i) Incorporation by reference.

(A) OEPA Ohio Administrative Code (OAC) Rule 3745–21–04, Attainment Dates and Compliance Time Schedules, Paragraph (C)(64); effective date March 31, 1993.

(B) OEPA OAC Rule 3745–21–10, Compliance Test Methods and Procedures, Paragraphs (Q), (R), (S), Appendices A, B, C; effective date March 31, 1993.

§ 52.1885 [Amended]

3. Section 52.1885 is amended by removing and reserving paragraph (b).

[FR Doc. 95–7100 Filed 3–22–95; 8:45 am]

BILLING CODE 6560–50–P

---

40 CFR Part 52

[CA 102–3–6902; FRL–5173–3]

Approval and Promulgation of Implementation Plans; California State Implementation Plan Revision, Placer County Air Pollution Control District and San Diego County Air Pollution Control District

AGENCY: Environmental Protection Agency (EPA).

ACTION: Final rule.

SUMMARY: EPA is finalizing the approval of revisions to the California State Implementation Plan (SIP) proposed in the **Federal Register** on January 10, 1995. The revisions concern rules from the Placer County Air Pollution Control District (PCAPCD) and the San Diego County Air Pollution Control District (SDCAPCD). This approval action will incorporate these rules into the federally approved SIP. The intended effect of approving these rules is to regulate emissions of volatile organic compounds (VOCs) in accordance with the requirements of the Clean Air Act, as amended in 1990 (CAA or the Act). The revised rules control VOC emissions from metal can and coil coating operations and establish recordkeeping requirements for sources emitting VOCs. Thus, EPA is finalizing the approval of these revisions to the California SIP under provisions of the CAA regarding EPA action on SIP submittals, SIPs for national primary and secondary ambient air quality standards and plan requirements for nonattainment areas.

EFFECTIVE DATE: This action is effective on April 24, 1995.

ADDRESSES: Copies of the rules and EPA's evaluation report for each rule are available for public inspection at EPA's Region IX office during normal business hours. Copies of the submitted rules are available for inspection at the following locations:

Rulemaking Section (A–5–3), Air and Toxics Division, U.S. Environmental Protection Agency, Region IX, 75 Hawthorne Street, San Francisco, CA 94105.

Environmental Protection Agency, Air Docket (6102), 401 ''M'' Street, S.W., Washington, D.C. 20460.

Placer County Air Pollution Control District, 11464 B Avenue, Auburn, CA 95603.

San Diego County Air Pollution Control District, 9150 Chesapeake Drive, San Diego, CA 92123–1096.

FOR FURTHER INFORMATION CONTACT: Nikole Reaksecker, Rulemaking Section, Air and Toxics Division, U.S. Environmental Protection Agency, Region IX, 75 Hawthorne Street, San Francisco, CA 94105. Telephone: (415) 744–1187.

SUPPLEMENTARY INFORMATION:

Background

On January 10, 1995 in 60 FR 2563, EPA proposed to approve the following rules into the California SIP: PCAPCD's Rule 223, Metal Container Coating; PCAPCD Rule 410, Recordkeeping for Volatile Organic Compound Emissions; and SDCAPCD Rule 67.4, Metal Container, Metal Closure, and Metal Coil Coating Operations. Rules 223 and 410 were adopted by PCAPCD on October 6, 1994 and November 3, 1994, respectively. Rule 67.4 was adopted by SDCAPCD on September 27, 1994. The rules were submitted by the State of California to EPA on November 30,

1994, December 19, 1994, and October 19, 1994, respectively. These rules were submitted in response to EPA's 1988 SIP-Call and the CAA section 182(a)(2)(A) requirement that nonattainment areas fix their reasonably available control technology (RACT) rules for ozone in accordance with EPA guidance that interpreted the requirements of the pre-amendment Act. A detailed discussion of the background for each of the above rules and nonattainment areas is provided in the NPRM cited above.

EPA has evaluated all of the above rules for consistency with the requirements of the CAA and EPA regulations and EPA interpretation of these requirements as expressed in the various EPA policy guidance documents referenced in the NPRM cited above. EPA has found that the rules meet the applicable EPA requirements. A detailed discussion of the rule provisions and evaluations has been provided in 60 FR 2563 and in technical support documents (TSDs) available at EPA's Region IX office (TSDs dated December 27, 1994, PCAPCD Rule 223; December 27, 1994, PCAPCD Rule 410; and December 27, 1994, SDCAPCD Rule 67.4).

Response to Public Comments

A 30-day public comment period was provided in 60 FR 2563. EPA received one comment letter from NAPP Systems, Inc. supporting EPA's proposed approval of SDCAPCD Rule 67.4.

EPA Action

EPA is finalizing action to approve the above rules for inclusion into the California SIP. EPA is approving the submittal under section 110(k)(3) as meeting the requirements of section 110(a) and Part D of the CAA. This approval action will incorporate these rules into the federally approved SIP. The intended effect of approving these rules is to regulate emissions of VOCs in accordance with the requirements of the CAA.

Nothing in this action should be construed as permitting or allowing or establishing a precedent for any future request for revision to any state implementation plan. Each request for revision to the state implementation plan shall be considered separately in light of specific technical, economic, and environmental factors and in relation to relevant statutory and regulatory requirements.

Regulatory Process

The OMB has exempted this action from review under Executive Order 12866.

List of Subjects in 40 CFR Part 52

Environmental protection, Air pollution control, Hydrocarbons, Incorporation by reference, Intergovernmental relations, Ozone, Reporting and recordkeeping requirements, Volatile organic compounds.

Note: Incorporation by reference of the State Implementation Plan for the State of California was approved by the Director of the Federal Register on July 1, 1982.

Dated: March 8, 1995.

John Wise,

Acting Regional Administrator.

Part 52, chapter I, title 40 of the Code of Federal Regulations is amended as follows:

PART 52—[AMENDED]

1. The authority citation for part 52 continues to read as follows:

Authority: 42 U.S.C. 7401–7671q.

Subpart F—California

2. Section 52.220 is amended by adding and reserving paragraphs (c)(201), (c)(202) introductory text, (c)(202)(i) introductory text, (c)(202)(i)(A) and (B), (c)(203), (c)(204), (c)(205) and (c)(206) and by adding paragraphs (c)(202)(i)(C), (c)(207) and (c)(208) to read as follows:

§ 52.220 Identification of plan.

* * * * *

(c) * * *

(201) [Reserved].

(202)(i)(A) [Reserved]

(B) [Reserved]

(C) San Diego County Air Pollution Control District (*1*) Rule 67.4, adopted on September 27, 1994.

(203)–(206) [Reserved]

(207) New and amended regulations for the following APCDs were submitted on November 30, 1994, by the Governor's designee.

(i) Incorporation by reference.

(A) Placer County Air Pollution Control District.

(*1*) Rule 223, adopted on October 6, 1994.

(208) New and amended regulations for the following APCDs were submitted on December 19, 1994, by the Governor's designee.

(i) Incorporation by reference.

(A) Placer County Air Pollution Control District.

(*1*) Rule 410, adopted on November 3, 1994.

[FR Doc. 95–7008 Filed 3–22–95; 8:45 am]

BILLING CODE 6560–50–P

---

40 CFR Part 86

[AMS–FRL–5170–6]

RIN 2060–AC65

Control of Air Pollution From New Motor Vehicles and New Motor Vehicle Engines: Regulations Requiring On-Board Diagnostic (OBD) Systems—Acceptance of Revised California OBD II Requirements; OBD Relief for Alternative Fueled Vehicles; and Revisions for Consistency Between Federal OBD and California OBD II

AGENCY: Environmental Protection Agency (EPA).

ACTION: Direct final rule.

SUMMARY: This direct final rulemaking revises requirements associated with on-board diagnostic (OBD) systems. The federal OBD rulemaking, published February 19, 1993, allowed for compliance with California OBD II requirements as satisfying federal OBD requirements through the 1998 model year, an allowance of which most original equipment automobile manufacturers intend to take advantage. The California Air Resources Board has recently revised their OBD II requirements. The federal OBD regulations require appropriate revisions such that compliance with the recently revised OBD II requirements will satisfy federal OBD. Additionally, aspects of the federal OBD requirements will be revised and updated, in some cases to maintain consistency with the OBD II provisions, including providing OBD relief for alternative fueled vehicles, and in some cases to clarify federal OBD provisions. Finally, consistent with an order from the Court of Appeals for the District of Columbia, the federal regulations are being revised to delete a requirement that manufacturers include certain features to deter tampering on affected vehicles.

DATES: This final action will become effective on May 22, 1995 unless notice is received by April 24, 1995 that any person wishes to submit adverse comments. Should EPA receive such notice, EPA will publish subsequent action in the **Federal Register** withdrawing all or part of this final action.

ADDRESSES: Written comments should be submitted (in duplicate if possible) to: The Air Docket, room M–1500 (Mail

Code 6102), Waterside Mall, Attention: Docket No. A–90–35, 401 M Street SW., Washington, DC 20460. Materials relevant to this rulemaking are contained in Docket No. A–90–35, and may be viewed from 8:30 a.m. until noon and from 1:30 p.m. until 3:30 p.m. Monday through Friday. A reasonable fee may be charged by EPA for copying docket material. Those wishing to notify EPA of their intent to submit adverse comments on this action should contact Todd Sherwood, Certification Division, U.S. Environmental Protection Agency, 2565 Plymouth Rd., Ann Arbor, Michigan 48105.

FOR FURTHER INFORMATION CONTACT: Todd Sherwood, (313) 668–4405.

SUPPLEMENTARY INFORMATION:

I. Introduction and Background

On February 19, 1993, the EPA promulgated a final rulemaking[1] requiring manufacturers of light-duty vehicles (LDV) and light-duty trucks (LDT) to install on-board emission control diagnostics (OBD) systems on such vehicles beginning in model year 1994. The regulations promulgated in that final rulemaking require that manufacturers install OBD systems which monitor emission control components for any malfunction or deterioration causing exceedances of certain emission thresholds, and alert the vehicle operator to the need for repair. That rulemaking also requires that, when a malfunction occurs, diagnostic information must be stored in the vehicle's computer to assist the mechanic in diagnosis and repair.

Additionally, that rulemaking makes an allowance for manufacturers to satisfy the Federal OBD requirements through the 1998 model year by installing systems satisfying the California OBD II requirements pertaining to those model years. This allowance means that manufacturers could concentrate on designing one system to meet the California OBD II requirements and installing that system nationwide during allowable model years. As EPA regulations cannot be revised except through EPA rulemaking, the OBD II requirements allowed under this provision were, and have continued to be, those existing on the date of publication of the federal OBD final rulemaking. This means that subsequent changes made to the OBD II requirements by the California Air Resources Board (ARB) may be inconsistent and potentially unacceptable for federal OBD compliance. The provisions of this direct final rulemaking will allow manufacturers to comply with federal OBD requirements by optionally complying with more recent OBD II regulations, specifically those contained in ARB Mail Out #95–03, made publicly available January 19, 1995.

Also included in the February 1993 federal OBD final rulemaking was a requirement that all LDVs and LDTs for which emission standards were in place comply with the OBD requirements. A separate Agency rulemaking[2] subsequently promulgated emission standards for gaseous alternative fuels, and specified that these vehicles comply with federal OBD requirements beginning in the 1997 and 1998 model years for liquified petroleum gas and natural gas, respectively. The provisions of this direct final rulemaking will provide some regulatory relief through the 1998 model year for alternative fueled vehicles by requiring implementation of diagnostic strategies only to the extent feasible, or where the unique effects of alternative fuels on those diagnostic strategies are not of concern.

In § 86.094–18 of the February 1993 rulemaking was a requirement that vehicle manufacturers install on affected vehicles features to deter modification except as authorized by the manufacturer. Several associations representing aftermarket parts manufacturers, rebuilders, distributors, retailers and service and repair providers (''petitioners'') petitioned for review of this provision of the United States Court of Appeals for the District of Columbia Circuit (Docket No. 93–1277). On May 9, 1994, the Agency and the petitioners filed with the Court a Joint Motion to Remand the Administrative Record to the Agency ''in order for EPA to reconsider the anti-tampering provisions, to address any tensions between these provisions and the access and information availability requirements [of sections 202(m)(4) and 202(m)(5) of the Act], and, if necessary, to promulgate new regulations addressing EPA's concerns about tampering.'' The parties further requested the Court to order that the anti-tampering provisions (and the incorporation of California's anti-tampering regulations) be vacated. On May 19, 1994, the Court ordered that the joint motion be granted and that the anti-tampering regulation be vacated. The Court also ordered that 40 CFR 86.094–17(j) be vacated to the extent it requires compliance with California's anti-tampering regulations for those vehicles optionally certified to the California OBD II requirements. On October 7, 1994, EPA published a notice[3] informing the public of the decision of the court and announcing its intention to issue a final rulemaking officially withdrawing these provisions. Today's action withdraws these provisions.

II. Requirements of This Direct Final Rulemaking

A. Acceptance of Revised California OBD II

This direct final rulemaking allows manufacturers to comply with federal OBD requirements by optionally complying with the revised and recently adopted California OBD II regulations. This allowance is not new. The allowance for optional compliance with California OBD II was made in the federal OBD final rulemaking in February, 1993. However, since that time, the ARB has made several revisions to the OBD II regulations.

Because the Agency cannot simply accept the revised OBD II without undergoing the federal regulatory process, any optional compliance with California OBD II under the current federal regulations must be done against the OBD II regulations as they existed in February, 1993 (ARB Mail Out #92–56, November, 1992). However, the ARB has determined that several manufacturers would have difficulty complying with the OBD II regulations as they existed in February, 1993. The most notable requirements that currently pose difficulties are those for engine misfire detection under all positive torque engine speeds and conditions and full OBD II implementation on alternative fueled vehicles. Additionally, most manufacturers have indicated difficulty meeting other aspects of the OBD II regulations due to, for example, the complexity of the computer software requirements, and unpredictable driver actions such as resting a foot on the gas pedal while stopped at a traffic light. It is these additional difficulties that have prompted ARB to provide a ''deficiency'' allowance in their revised OBD II regulations whereby manufacturers can certify as OBD II compliant despite some reasonably acceptable and unplanned deficiency in the OBD system.

As a result of the ARB revisions to OBD II, and to remain consistent with the original intent of providing for optional compliance with OBD II for federal OBD purposes, this direct final rulemaking will provide the same

[1] 58 FR 9468, February 19, 1993.

[2] 59 FR 48472, September 21, 1994.

[3] 59 FR 51114.

option but will require that manufacturers choosing this option comply with the more recent OBD II regulations contained in ARB Mail Out #95–03. This means that any federal vehicles complying with federal OBD by optionally complying with California OBD II are allowed the same deficiencies as allowed under the OBD II provisions. Note, however, that a manufacturer requesting certification of a deficient OBD II system must receive EPA acceptance of any deficiency independently of an acceptance made by ARB. The Agency will use the same criteria specified by the ARB, those criteria being the extent to which the requirements are satisfied overall on the vehicle applications in question, the extent to which the resultant diagnostic system design will be more effective than earlier OBD systems, and a demonstrated good-faith effort to meet the requirements in full by evaluating and considering the best available monitoring technology. The Agency will make every effort to make determinations of OBD II deficiency acceptance in concert with ARB staff to avoid the potential for conflicting determinations. However, the extent to which the agencies can make concurrent and coordinated findings will rely heavily on the manufacturer, who will be expected to provide any necessary information to both agencies in parallel rather than pursuing deficiency determinations on a separate basis.

B. Allowance of OBD Deficiencies for Federal OBD Vehicles

Consistent with ARB, the Agency has determined that a similar provision must also be provided for those vehicles certifying to the federal OBD requirements of § 86.094–17. This is necessary for the same reasons it was necessary for ARB to make the change. Despite the best efforts of manufacturers, many have needed to certify vehicles with some sort of deficiency when unanticipated problems arose that could not be remedied in time to meet production schedules. Given the newness and considerable complexity of designing, producing, and installing the components and systems that make up the OBD system, manufacturers have expressed and demonstrated difficulty in complying with every aspect of the OBD requirements, and such difficulty appears likely to continue into the 1996 and 1997 model years. The Agency believes that 100 percent compliance can be achieved, but during the initial years of OBD implementation, EPA believes that some sort of relief must be provided to allow for certification of vehicles that, despite the best efforts of the manufacturers, have deficient OBD systems.

The EPA ''deficiency'' allowance should not be seen as a waiver of any kind. EPA will continue to grant blanket waivers for 1994 and/or 1995 model year vehicles. However, beginning with the 1996 model year, blanket waivers will not be granted. Though EPA will accept minor deficiencies, EPA does not intend to accept any deficiency requests that include the complete lack of a required diagnostic monitor. Furthermore, EPA does not intend to certify vehicles with federal OBD systems that have more than one OBD system deficiency, and EPA will not allow carryover of any deficiency to the following model year unless it can be demonstrated that correction of the deficiency requires hardware modifications that absolutely cannot be accomplished in the time available, as determined by the Administrator. These limitations should prevent a manufacturer from using the deficiency allowance as a means to avoid compliance or delay OBD implementation.

C. Relief for Alternative Fueled Vehicles

The acceptance of the recent OBD II regulations also means that alternative-fueled federal vehicles optionally complying with California OBD II are provided considerable relief relative to previous versions of OBD II. This direct final rule will make the same provisions available for vehicles certified specifically to the federal OBD requirements of § 86.094–17. Previously, OBD II required that alternative fueled vehicles comply fully with all applicable requirements beginning in the 1996 model year. EPA's final rulemaking on gaseous fuels[4] required that LDVs and LDTs fueled by liquified petroleum gas (LPG) meet OBD requirements beginning with optionally certified vehicles in the 1994 model year. The gaseous fuels rulemaking also required that natural gas vehicles meet OBD requirements beginning with the 1998 model year. However, manufacturers have stated that, due to the workload associated with complying fully with the OBD requirements on gasoline vehicles, coupled with the low sales volumes projected for alternative fueled vehicles, OBD development and testing for such vehicles cannot be completed in either the OBD II or federal OBD timeframes. Manufacturers have stated that more time is needed to evaluate the effects of alternative fuels on component performance to ensure that OBD diagnostic strategies will be reliable in-use. As a result of the OBD implementation deadlines, manufacturers have considered delaying plans to sell alternative fueled vehicles.

Recognizing these manufacturer concerns, and the inherent environmental benefits of having greater numbers of alternatively fueled vehicles manufactured as soon as possible, both the ARB and EPA have decided to delay full OBD II/federal OBD implementation until the 1999 model year for alternative fueled vehicles. For federal certification beginning in the 1997 model year for LPG light-duty vehicles and light-duty trucks, and beginning in the 1998 model year for natural gas LDVs and LDTs, manufacturers will be required to implement diagnostic strategies to the extent feasible, but will not be required to include monitoring strategies for which the effects of alternative fuels are of technological concern. Specifically, manufacturers will be required to implement electrical circuit continuity and/or functional checks at a minimum, and those major system monitors unaffected by fuel type. In addition, EPA will not require that federal alternative fueled vehicles minimally comply with California OBD I[5] for those years prior to initiation of applicable emission standards. Instead, beginning with the applicability of emission standards and extending through the 1998 model year, EPA will require compliance with OBD II or federal OBD to the extent feasible. This is an important provision for manufacturers, since minimal compliance with OBD I sometimes cannot be met on alternative fueled vehicles (e.g., OBD I requires EGR monitoring while many alternative fueled vehicles have no EGR), and sometimes manufacturers would rather comply with OBD II or federal OBD than comply with OBD I because it is more accurate and effective (e.g., OBD I requires pass/fail determinations of computer input and output components, while OBD II requires rational decisions to be made concerning the functional characteristics of input and output components, i.e., the component is working, but is it working the way it should work?).

D. Revised Engine Misfire Identification Criteria

Another change being made in this direct final rulemaking is a revision to the misfire identification requirement. Currently, the federal OBD regulation requires that a fault code identify the specific cylinder in which a misfire condition has been detected for those

[4] 59 FR 48472, September 21, 1994.

[5] Title 13 California Code § 1968, p. 614.16.1.

cases where just one cylinder is misfiring. However, in working toward meeting the expanded misfire monitoring requirements of OBD II for the 1997 model year (detection under all positive torque engine conditions), some manufacturers have found that specific cylinder identification can be unreliable at higher engine speeds. The current federal OBD requirement does not specifically require misfire detection at such engine speeds, but the Agency does not want to provide any incentive for manufacturers to disable misfire monitoring under conditions where misfire can occur and can be reliably detected, even where those conditions are outside the range of Federal Test Procedure (FTP) operation. Consequently, the new provision will allow a manufacturer to disable algorithms employed to identify the misfiring cylinder under certain operating conditions if it can be demonstrated that the algorithm would not operate reliably when such conditions exist. This change will have no impact on the operating conditions under which misfire is to be detected, and it is consistent with changes recently made to the OBD II regulations.

E. Delay of the Signal Access Requirements of SAE J1979 Test Modes 6 and 7

Also being changed in this direct final rulemaking is a delay to the 1997 model year for full implementation of the signal access requirements specified in §§ 86.094–17(f)(3) and 86.094–17(h). Test modes 6 and 7 have only recently been added to Society of Automotive Engineers (SAE) Recommended Practice J1979 to standardize the format for making available numerical test results and limits for monitored components and systems, and the one-trip trouble codes for continuously monitored components. This information is helpful in diagnosis and repair of emission-related malfunctions.

F. Extension of Limited Waiver Provisions Into the 1995 Model Year

EPA is providing an extension through the 1995 model year of a limited waiver provision found in § 86.094–17(i). Previously, this limited waiver provision was provided for 1994 model year vehicles only. As decided in the February, 1993, OBD final rulemaking, there may be some engine families with very low sales volumes that have never been equipped with an OBD I or similar OBD system. In such cases, EPA may make special considerations by granting waivers as done in the 1994 model year for the 1995 model year to a system less than OBD I. EPA will consider such factors as manufacturer projections of very low sales volume for an engine family (e.g., 5000 or less), scheduled phase-out of significant engine technology with the 1994 or 1995 model years for that engine family, and whether or not the engine, or any similar engine within the manufacturer's product line, has ever been equipped with an OBD I or similar OBD system in making waiver decisions to a system less than OBD I. As stated, this provision was previously available only for 1994 model year vehicles and is now being provided for 1995 model year vehicles. Note that the Agency has no intention of providing this limited waiver provision for the 1996 model year.

G. Revised Electrical Continuity/ Functionality Check Provisions

Also being changed in this direct final rulemaking is the electrical circuit continuity monitoring provision of § 86.094–17(b)(1). This change is being made to clarify the Agency's stance that component functionality checks (i.e., a check of the functional characteristics of a component/system) are an acceptable and perhaps more effective diagnostic tool than an electrical continuity check alone. The current requirement specifies that, "* * * all emission-related powertrain components connected to a computer shall, at a minimum, be monitored for circuit continuity." The new requirement specifies that a functional system check may be performed provided the manufacturer can demonstrate that the functional check is equivalent or superior to the circuit continuity monitor.

Correspondingly, the certification provisions of § 86.094–30 and § 86.095–30 are being changed to reflect the monitoring requirement change being made to § 86.094–17(b)(1). The new certification provisions specify that the MIL must illuminate upon electrical disconnection of the evaporative purge control (if equipped), or the operation of any emission-related powertrain component which results in emission increases equal to any one of the 0.2/1.7/0.5 g/mi HC/CO/NO_X emission thresholds.

These changes are similar to a change recently made to the OBD II regulations which requires that the MIL be illuminated for any emission-related powertrain component malfunction causing emissions to increase by 15 percent of the applicable emission standard. Section 86.094–17(b) currently requires that the OBD system, at a minimum, detect loss of circuit continuity in any emission-related powertrain component connected to a computer. This requirement will still apply as the minimum acceptable monitoring approach. However, because the Agency believes that a functional check can be a more effective diagnostic tool than an electrical continuity check alone, the Agency will accept a functional check. The Agency will minimally accept an electrical continuity check provided the manufacturer can demonstrate the adequacy of such a check.

H. Deletion of Anti-Tampering Regulations

Also being changed in this direct final rulemaking is the deletion of § 86.094–18 and the revision of § 86.094–17(j) for reasons specified above and in **Federal Register** notice of court decisions regarding Agency regulations.[6] EPA is continuing to review its policy concerns regarding tampering. EPA may in the future determine that it is appropriate to promulgate new regulations to address these concerns. If the Agency determines that new regulations are appropriate, EPA will at that time publish a notice of proposed rulemaking addressing these concerns.

III. Public Participation and Effective Date

The Agency is publishing this action as a direct final rule because it views the changes contained herein as noncontroversial and anticipates no adverse or critical comments. This direct final rulemaking alters an existing provision by aligning federal OBD requirements with the most recent California OBD II requirements. Auto manufacturers should not take issue since they favor the requirements intended under this rule as they will save costs without impacting OBD system effectiveness, and they are provided more leadtime for development of OBD systems for alternative fueled vehicles. Aftermarket manufacturers and the independent service industry should not take issue since the rule will not affect the serviceability of vehicles or the design of replacement parts. Aftermarket fuel conversion kit manufacturers should not take issue since they favor additional leadtime for development of OBD systems. Environmental groups should not take issue since the rule will not significantly affect the emission reductions associated with OBD, and the rule will provide regulatory relief for alternative fueled vehicles allowing these vehicles to be more readily introduced into the vehicle fleet.

[6] 59 FR 51114, October 7, 1994.

In addition, the Agency's deletion of the anti-tampering regulations is required by court order.

This action will be effective on May 22, 1995 unless EPA is notified by April 24, 1995 that adverse or critical comments will be submitted. EPA requests that, should any adverse or critical comments be submitted, they be submitted according to the specific issues as identified below:

(a) Acceptance of Revised California OBD II

(b) Allowance of OBD Deficiencies for Federal OBD Vehicles

(c) Relief for Alternative Fueled Vehicles

(d) Revised Engine Misfire Identification Criteria

(e) Delay of the Signal Access Requirements of SAE J1979 Test Modes 6 and 7

(f) Extension of Limited Waiver Provisions into the 1995 Model Year

(g) Revised Electrical Continuity/Functionality Check Provisions

(h) Deletion of Anti-Tampering Regulations

Should EPA receive such notice of adverse or critical comments on the specific issues as identified above, EPA will publish one action withdrawing the provisions of this final action corresponding to that specific issue. A subsequent action will then be published proposing those provisions and requesting comments.

IV. Administrative Requirements

A. Administrative Designation

Under Executive Order 12866[7], the Agency must determine whether the regulatory action is ''significant'' and therefore subject to OMB review and the requirements of the Executive Order. The Order defines ''significant regulatory action'' as one that is likely to result in a rule that may:

(1) Have an annual effect on the economy of $100 million or more or adversely affect in a material way the economy, a sector of the economy, productivity, competition, jobs, the environment, public health or safety, or State, local, or tribal governments or communities;

(2) Create a serious inconsistency or otherwise interfere with an action taken or planned by another agency;

(3) Materially alter the budgetary impact of entitlements, grants, user fees, or loan programs or the rights and obligations of recipients thereof; or,

(4) Raise novel legal or policy issues arising out of legal mandates, the President's priorities, or the principles set forth in the Executive Order.

It has been determined that this rule is not a ''significant regulatory action'' under the terms of Executive Order 12866 and is therefore not subject to OMB review.

B. Reporting and Recordkeeping Requirements

This direct final rulemaking does not change the information collection requirements submitted to and approved by OMB in association with the OBD final rulemaking (58 FR 9468, February 19, 1993; and, 59 FR 38372, July 28, 1994).

C. Impact on Small Entities

The Regulatory Flexibility Act of 1980 requires Federal agencies to identify potentially adverse impacts of federal regulations upon small entities. This direct final rulemaking will provide regulatory relief to both large and small volume automobile manufacturers by maintaining consistency with California OBD II requirements, by providing the limited 1995 model year waiver, by allowing deficiencies for federal OBD compliance, and by providing regulatory relief for alternative fueled vehicles. This direct final rulemaking will have no impact on businesses which manufacture, rebuild, distribute, or sell automotive parts, nor those involved in automotive service and repair.

Therefore, pursuant to section 605(b) of the Regulatory Flexibility Act, 5 U.S.C. 605(B), the Administrator certifies that this regulation will not have a significant economic impact on a substantial number of small entities.

D. Paperwork Reduction Act

The Paperwork Reduction Act of 1980, 44 U.S.C. 3501 *et seq.*, and implementing regulations, 5 CFR Part 1320, do not apply to this action as it does not involve the collection of information as defined therein.

E. Electronic Copies of Rulemaking Documents

Electronic copies of the preamble and the regulatory text of this direct final rulemaking are available on the Office of Air Quality Planning and Standards (OAQPS) Technology Transfer Network bulletin Board System (TTNBBS). Instructions for accessing TTNBBS and downloading the relevant files are described below.

TTNBBS can be accessed using a dial-in telephone line (919) 541–5742 and a 1200, 2400, or 9600 bps modem (equipment up to 14.4 Kbps can be accommodated). The parity of the modem should be set to N or none, the data bits to 8, and the stop bits to 1. When first signing on the bulletin board, the user will be required to answer some basic informational questions to register into the system. After registering, proceed through the following options from a series of menus:

(T) Gateway to TTN Technical Areas (Bulletin Boards)

(M) OMS

(K) Rulemaking and Reporting

At this point, the system will list all available files in the chosen category in chronological order with brief descriptions. File information can be obtained from the ''READ.ME'' file. To download a file, the user needs to choose a file transfer protocol appropriate for the user's computer from the options listed on the terminal.

TTNBBS is available 24 hours a day, 7 days a week except Monday morning from 8–12 Eastern Time, when the system is down for maintenance and backup. For help in accessing the system, call the systems operator at (919) 541–5384 in Research Triangle Park, North Carolina, during normal business hours Eastern Time.

List of Subjects in 40 CFR Part 86

Environmental protection, Administrative practice and procedure, Air pollution control, Gasoline, Incorporation by reference, Motor vehicles, Motor vehicle pollution, Reporting and recordkeeping requirements.

Dated: March 2, 1995.

Carol M. Browner,

Administrator.

For the reasons set out in the preamble, part 86 of title 40 of the Code of Federal Regulations is amended as follows:

PART 86—CONTROL OF AIR POLLUTION FROM NEW AND IN-USE MOTOR VEHICLES AND NEW AND IN-USE MOTOR VEHICLE ENGINES: CERTIFICATION AND TEST PROCEDURES

1. The authority citation for part 86 continues to read as follows:

Authority: Secs. 202, 203, 205, 206, 207, 208, 215, 216, 217, and 301(a), Clean Air Act, as amended (42 U.S.C. 7521, 7522, 7524, 7525, 7541, 7542, 7549, 7550, 7552, and 7601(a)).

Subpart A—[Amended]

2. Section 86.094–17 is amended by revising paragraphs (b)(1), (e)(2), (f)(3), (i), and (j) to read as follows:

§ 86.094–17 Emission control diagnostic system for 1994 and later light-duty vehicles and light-duty trucks.

* * * * *

[7] 58 FR 51735 (October 4, 1993).

(b) (1) The electronic evaporative emission purge control, if equipped, and all emission-related powertrain components connected to a computer shall, at a minimum, be monitored for circuit continuity. In lieu of monitoring circuit continuity, a functional system check may be performed provided the manufacturer can demonstrate that the functional check is equivalent or superior to the circuit continuity monitor. All components required by these regulations to be monitored shall be evaluated periodically, but no less frequently than once per Urban Dynamometer Driving Schedule as defined in appendix I, paragraph (a), of this part, or similar trip.

* * * * *

(e) * * *

(2) For a single misfiring cylinder, the fault code(s) shall identify the cylinder, unless the manufacturer submits data and/or an engineering evaluation which adequately demonstrate that the misfiring cylinder cannot be reliably identified under certain operating conditions; multiple misfiring cylinders need not be uniquely identified if a distinct multiple misfire fault code is stored.

* * * * *

(f) * * *

(3) For all emission control components and systems for which specific on-board evaluation tests are conducted (catalyst, oxygen sensor, etc.), the results of the most recent test performed by the vehicle, and the limits to which the system is compared shall be available through the data link per SAE J1979 specifications as referenced in paragraph (h) of this section beginning no later than the 1997 model year. The Administrator may allow a pass/fail indication for the most recent test results for those monitored components and systems for which such an indication is more appropriate (e.g., misfire detection, fuel system monitoring, etc.).

* * * * *

(i) Upon application by the manufacturer, the Administrator may either waive the requirements of this section for specific components of any class or category of light-duty vehicles or light-duty trucks for model years 1994 or 1995 (or both), or, through the 1998 model year, the Administrator may accept an OBD system as compliant even though specific requirements are not fully met. Such waivers or compliances without meeting specific requirements will be granted only if compliance would be infeasible or unreasonable considering such factors as, but not limited to, technical feasibility, lead time and production cycles including phase-in or phase-out of engines or vehicle designs and programmed upgrades of computers, and if any unmet requirements are not carried over from the previous model year except where unreasonable hardware modifications would be necessary to correct the noncompliance, and the manufacturer has demonstrated an acceptable level of effort toward compliance as determined by the Administrator. For alternative fueled vehicles (i.e., natural gas, liquified petroleum gas, or methanol), beginning with the model year for which emission standards are applicable and extending through the 1998 model year, manufacturers may request the Administrator to waive specific monitoring requirements of this section for which monitoring may not be reliable with respect to the use of the alternative fuel. At a minimum, all vehicles covered by this section, including those receiving a waiver as described in this paragraph, shall be equipped with an OBD system meeting either the California OBD I requirements, or some acceptable portion of the California OBD II or federal OBD requirements as specified in this section, except that for the 1994 and 1995 model years EPA may grant a waiver to a system less than OBD I giving consideration to such factors as manufacturer projections of very low sales volume for an engine family (e.g., 5000 or less), scheduled phase-out of significant engine technology with the 1994 or 1995 model years for that engine family, and whether or not the engine, or any similar engine within the manufacturer's product line, has ever been equipped with an OBD I or similar OBD system.

(j) Demonstration of compliance with California OBD II requirements (Title 13 California Code 1968.1), as modified pursuant to California Mail Out #95–03 (January 19, 1995), shall satisfy the requirements of this section through the 1998 model year except that compliance with Title 13 California Code 1968.1(d), pertaining to tampering protection, is not required to satisfy the requirements of this section.

§ 86.094–18 [Removed].

3. Section 86.094–18 is removed.

4. Section 86.094–30 is amended by revising paragraph (f)(4) to read as follows:

§ 86.094–30 Certification.

* * * * *

(f) * * *

(4) The electronic evaporative purge control device (if equipped) is disconnected or the operation of any emission-related powertrain component connected to a computer results in an increase in emissions of 0.2 g/mi HC or 1.7 g/mi CO or 0.5 g/mi NO_x on a normal temperature (20 to 30 °C) emission certification test.

5. Section 86.095–30 is amended by revising paragraph (f)(4) to read as follows:

§ 86.095–30 Certification.

* * * * *

(f) * * *

(4) The electronic evaporative purge control device (if equipped) is disconnected or the operation of any emission-related powertrain component connected to a computer results in an increase in emissions of 0.2 g/mi HC or 1.7 g/mi CO or 0.5 g/mi NO_x on a normal temperature (20 to 30 °C) emission certification test.

[FR Doc. 95–6272 Filed 3–22–95; 8:45 am]

BILLING CODE 6560–50–P

---

40 CFR Part 300

[FRL–5176–9]

National Oil and Hazardous Substances Pollution Contingency Plan; National Priorities List Update

AGENCY: Environmental Protection Agency.

ACTION: Notice of deletion of the Crystal City Airport Superfund Site (Site) from the National Priorities List.

SUMMARY: The Environmental Protection Agency (EPA) announces the deletion of the Site in Crystal City, Texas, from the National Priorities List (NPL). The NPL is Appendix B of 40 CFR Part 300 which is the National Oil and Hazardous Substances Pollution Contingency Plan (NCP), which EPA promulgated pursuant to Section 105 of the Comprehensive Environmental Response, Compensation, and Liability Act of 1980, as amended (CERCLA). EPA and the State of Texas have determined that all appropriate Fund-financed responses under CERCLA have been implemented and that no further cleanup by responsible parties is appropriate. Moreover, EPA and the State of Texas have determined that remedial actions conducted at the Site to date have been protective of public health, welfare, and the environment.

EFFECTIVE DATE: March 23, 1995.

FOR FURTHER INFORMATION CONTACT: Ernest R. Franke, Remedial Project Manager, US EPA, Region 6, 1445 Ross Avenue, Dallas, Texas 75202–2733, (214) 665–8521.

SUPPLEMENTARY INFORMATION: The Site to be deleted from the NPL is the ''Crystal City Airport Superfund Site,'' Crystal City, Texas. A Notice of Intent to Delete for this Site was published on January 4, 1995 (60 FR 422). The closing date for public comment was February 3, 1995. EPA received no comments during the comment period.

EPA identifies sites which appear to present a significant risk to public health, welfare, or the environment and maintains the NPL as a list of the most serious of those sites. Sites on the NPL may be the subject of remedial response actions financed using the Hazardous Substance Response Trust Fund (Fund). Any site deleted from the NPL remains eligible for Fund-financed remedial actions in the unlikely event that conditions at the site warrant such action. Section 300.425(e)(3) of the NCP, provides that in the event of a significant release from a site deleted from the NPL, the site shall be restored to the NPL without application of the Hazard Ranking System. Deletion of a site from the NPL does not affect responsible party liability or impede agency efforts to recover costs associated with response actions.

List of Subjects in 40 CFR Part 300

Environmental protection, Hazardous waste.

Dated: March 6, 1995.

William B. Hathaway,

Acting Regional Administrator, Environmental Protection Agency, Region 6.

For the reasons setout in the preamble, 40 CFR part 300 is amended as follows:

PART 300—[AMENDED]

1. The authority citation for part 300 continues to read as follows:

Authority: 42 U.S.C. 9601–9657; 33 U.S.C. 1321(d); E.O. 11735, 38 FR 21243; E.O. 12580; 52 FR 2923; E.O. 12777, 56 FR 54757.

Appendix B—[Amended]

2. Table 1 of Appendix B to part 300 is amended by removing Crystal City Airport Superfund Site, Crystal City, Texas.

[FR Doc. 95–7197 Filed 3–22–95; 8:45 am]

BILLING CODE 6560–50–P

DEPARTMENT OF THE INTERIOR

Bureau of Land Management

43 CFR Public Land Order—7125

[AK–932–1430–01; AA–2793, J–010160]

Partial Revocation of Public Land Order No. 829 and Public Land Order No. 1731; Alaska

AGENCY: Bureau of Land Management, Interior.

ACTION: Public land order.

SUMMARY: This order revokes two public land orders insofar as they affect approximately 468.81 acres of National Forest System lands withdrawn for use by the Forest Service, Department of Agriculture, for the Herbert River Public Service Site and the Mill Creek Industrial Area. The lands are no longer needed for the purposes for which they were withdrawn. This action also allows the conveyance of the lands to the State of Alaska, if such lands are otherwise available. Any lands described herein that are not conveyed to the State are opened and will be subject to the terms and conditions of the national forest reservation and any other withdrawal of record.

EFFECTIVE DATE: March 23, 1995.

FOR FURTHER INFORMATION CONTACT: Sue A. Wolf, BLM Alaska State Office, 222 W. 7th Avenue, No. 13, Anchorage, Alaska 99513–7599, 907–271–5477.

By virtue of the authority vested in the Secretary of the Interior by Section 204 of the Federal Land Policy and Management Act of 1976, 43 U.S.C. 1714 (1988), it is ordered as follows:

1. Public Land Order No. 829 and Public Land Order No. 1731, which withdrew lands for use by the Forest Service as administrative sites, recreation areas, or for other public purposes, are hereby revoked insofar as they affect the following described lands:

Copper River Meridian

Tongass National Forest

(a) Public Land Order No. 829 (AA–2793).
T. 38 S., R. 64 E.,
Sec. 35, lots 5, 7, and 8;
Sec. 36, lot 6.

The area described contains 132.81 acres.

(b) Public Land Order No. 1731 (J–010160).

A parcel of land located within sec. 25 of T. 62 S., R. 84 E., and secs. 30 and 31 of T. 62 S., R. 85 E., more particularly described as:

Beginning at U S C & G Station ''Virgin'' located at Mill Creek on the east shore of Eastern Passage, thence;
East, ¼ mile;
North, 1½ miles;
West, 1 mile to U S C & G Station ''Mill'';
Southerly, along line of mean high tide of Eastern Passage to point of beginning.

The area described contains approximately 336 acres.

The areas describes aggregate approximately 468.81 acres.

2. The State of Alaska applications for selection made under Section 6(a) of the Alaska Statehood Act of July 7, 1958, 48 U.S.C. note prec. 21 (1988), and under Section 906(e) of the Alaska National Interest Lands Conservation Act, 43 U.S.C. 1635(e) (1988), become effective without further action by the State upon publication of this public land order in the **Federal Register**, if such lands are otherwise available. Lands not conveyed to the State are opened and will be subject to the terms and conditions of the Tongass National Forest reservation and any other withdrawal of record.

Dated: March 13, 1995.

Bob Armstrong,

Assistant Secretary of the Interior.

[FR Doc. 95–7153 Filed 3–22–95; 8:45 am]

BILLING CODE 4310–JA–P

FEDERAL COMMUNICATIONS COMMISSION

47 CFR Parts 2 and 90

[PR Docket No. 93–61; FCC 95–41]

Automatic Vehicle Monitoring Systems

AGENCY: Federal Communications Commission.

ACTION: Final rule.

SUMMARY: This rule making proceeding adopts rules for the future licensing and continued development of a number of services and equipment using the 902–928 MHz band. In recent years, Automatic Vehicle Monitoring (AVM) systems and unlicensed Part 15 devices have developed and proliferated in this band and are providing services that are valuable and in the public interest. These services range from licensed vehicle location and automatic toll collection systems to unlicensed devices used for utility meter reading and inventory control. The adopted allocation plan for the 902–928 MHz band includes 8 MHz of additional spectrum for AVM services and establishes new provisions for governing the interference obligations of Part 15 and amateur operations in this band. This plan balances the differing operational needs of these varied types of uses so that most AVM systems and Part 15 devices will be able to achieve their service objectives without impeding each other's use of the spectrum. The adopted rules also

modify and eliminate outdated regulations that have not kept pace with the technological evolution of AVM and establish a new service, the Location and Monitoring Service (LMS), that both encompasses the old AVM service and future advanced transportation-related services.

EFFECTIVE DATE: April 24, 1995.

FOR FURTHER INFORMATION CONTACT: Thomas S. Dombrowsky, Martin D. Liebman or John J. Borkowski in the Wireless Telecommunications Bureau at (202) 418–0620.

SUPPLEMENTARY INFORMATION: This is a summary of the Commission's Report and Order in PR Docket No. 93–61, adopted February 3, 1995 and released February 6, 1995. The full texts of Commission decisions are available for inspection and copying during normal business hours in the FCC Docket Branch (Room 230), 1919 M Street, NW, Washington, DC. The complete text of this decision may also be purchased from the Commission's copy contractor, International Transcription Services (ITS), Inc., (202) 857–3800, 2100 M Street, NW, Suite 140, Washington, DC 20037.

Paperwork Reduction

The proposal contained herein has been analyzed with respect to the Paperwork Reduction Act of 1980 and found to contain no new or modified form, information collection and/or record keeping, labeling, disclosure, or record retention requirements; and will not increase or decrease burden hours imposed on the public.

Summary of the Report and Order

1. The Commission initiated the AVM service in 1974, when it adopted its *Report and Order* in Docket No. 18302. 30 RR 2d 1665 (1974) (*1974 Order*). In the *1974 Order,* we found that AVM had the potential to accommodate a number of important functions, such as tracking and monitoring large fleets of vehicles and providing information to allow more efficient use of vehicles through better dispatch and routing information. We also noted that AVM systems had already been operating for several years on an experimental and developmental basis, allowing us to gain valuable information regarding advances in AVM technology. [The Commission first licensed AVM on a developmental basis in 1968. In 1972, the Commission sought additional information on the development of AVM since its original inquiry and proposed to adopt rules for permanent licensing. *See Further Notice of Inquiry and Notice of Proposed Rule Making,* Docket No. 18302, 35 FCC 2d 692 (1972). While recognizing the technological progress made by AVM, we concluded that development of new vehicle monitoring technologies was also likely in the future, making it inadvisable to adopt permanent rules until more information was available regarding the viability of such new technologies. Accordingly, we decided to provide for the licensing of AVM systems on both a permanent and a developmental basis under ''interim'' rules. *1974 Order* at para. 5. These rules have remained in effect until now.

2. Our 1974 AVM rules provide for licensing of AVM systems in the 903–912 and 918–927 MHz bands, as well as in several bands below 512 MHz. While little licensing of AVM has occurred below 512 MHz, there has been significant AVM use of the 900 MHz bands in recent years. Existing AVM systems in these bands generally fall into one of two broad technological categories: multilateration systems and non-multilateration systems. Multilateration systems use spread-spectrum technology to locate vehicles (and other moving objects) with great accuracy throughout a wide geographic area. This technology is used, for example, by trucking companies to locate and track their vehicle fleets, by municipal governments to pinpoint the location of their buses, and by entrepreneurs who are developing subscriber-based, stolen vehicle recovery systems. Non-multilateration systems use narrowband technology to transmit data to and from vehicles passing through a particular location. This technology is now providing valuable services to state and local governments operating various types of automated toll collection systems—with an estimated 500,000 cars currently served by such systems—and by the railroad industry in the monitoring of their systems' railway cars.

3. It is expected that in the coming years both types of LMS systems will play an integral role in the development and implementation of the variety of radio advanced transportation-related services, known as ''Intelligent Vehicle Highway Systems'' (IVHS) or ''Intelligent Transportation Systems'' (ITS). The ITS is a collection of advanced radio technologies that promise to improve the efficiency and safety of our nation's highways, reduce harmful automobile emissions, promote more efficient energy use, and increase national productivity.

4. To recognize the expected growth of ITS, this *Report and Order* creates a new subpart in Part 90 for Transportation Infrastructure Radio Services (TIRS). The Location and Monitoring Service (LMS), which uses the 902–928 MHz band, constitutes the first service contained within the TIRS category. As we allocate additional spectrum or create new services intended to further the efficiency of the nation's transportation infrastructure, these new services will likely be regulated under the TIRS. The TIRS will thus further Congress's goal of encouraging ITS by providing an organized and unified approach towards regulating spectrum for ITS-related services.

5. LMS systems will share their portion of the 902–928 MHz band with other users. The band is allocated on a primary basis for use by Government radiolocation systems and Industrial, Scientific, and Medical (ISM) equipment, with Government fixed and mobile operations secondary to these users. Amateur Radio Service licensees operate in the entire band, but on a secondary basis to the ISM, Government and AVM users. Part 15 uses are permitted in this band, but are secondary to all other uses, including AVM and amateur operations.

6. In 1989 and 1990, we also modified our rules to permit enhanced operation of spread spectrum-based radio devices throughout the 902–928 MHz band on an unlicensed basis, pursuant to Part 15 of our Rules. Since modifying our rules to provide for enhanced Part 15 operations, *see Report and Order,* Gen. Docket No. 87–389, 4 FCC Rcd 3493 (1989), 54 FR 17710 (April 25, 1989), and *Report and Order,* Gen. Docket No. 89–354, 5 FCC Rcd 4125 (1990), 55 FR 28760 (July 13, 1990), a large number of equipment manufacturers and entrepreneurial companies have developed radio devices and implemented radio systems employing spread-spectrum technology in the 902–928 MHz band. It is estimated that several million Part 15 devices have been sold and are being used every day to provide a wide variety of valuable services to the American public.

7. On May 28, 1992, North American Teletrac and Location Technologies (Teletrac) filed a Petition for Rule Making (RM–8013) requesting that we adopt permanent rules for licensing AVM systems. On March 11, 1993, in response to Teletrac's petition, we adopted the *Notice of Proposed Rule Making* (*Notice*) in this proceeding to examine the future licensing and continued development of AVM systems, PR Docket No. 93–61, 8 FCC Rcd. 2502 (1993), 58 FR 21276 (April 20, 1993). In the *Notice,* we propose to replace the existing interim rules for AVM with permanent rules. We also proposed to expand the technical

parameters of the service to permit locating and monitoring of people and objects, as well as vehicles, and therefore proposed to rename the service as the Location and Monitoring Service (LMS). Additionally, we proposed to allocate the entire 902–928 MHz band for LMS, with separate allocations for multilateration LMS systems and non-multilateration LMS systems. We proposed that all LMS systems operate on a shared basis.

8. In response to our *Notice*, we received numerous comments and reply comments from LMS service providers, LMS licensees that use LMS systems to meet their own internal needs (such as railroad companies and local government entities), LMS users, manufacturers and users of Part 15 equipment, and Amateur operators. We solicited further comments and reply comments in response to *ex parte* communications we received. *See* Public Notice, DA 94–129, PR Docket No. 93–61, 59 Fed.Reg. 7239 (February 15, 1994). Comments offered a wide array of suggestions on the many complex issues raised in the *Notice*. Although we are adopting many of the proposals set forth in our *Notice*, the comprehensive record developed in this proceeding has led us to modify some of our proposals, especially as they concern the spectrum available for the different types of LMS systems, the licensing procedures for the band, and the general obligations of various users of the band.

9. Multilateration and non-multilateration LMS systems, amateur operations, and Part 15 devices will all play an important role in providing valuable services to the American public in the coming years. We believe that our decisions in this proceeding recognize this importance and will enable all of these services to make continued use of this spectrum. We have therefore developed a spectrum plan that attempts to accommodate all of these users' requirements. The plan: (1) continues to permit secondary operations by unlicensed Part 15 and amateurs across the entire band, but affords users in these services a greater degree of protection to their operations; (2) enables non-multilaterations LMS systems to operate on spectrum separate from multilateration systems; and (3) allocates spectrum on an exclusive basis for multilateration LMS licenses.

10. In this *Report and Order* we have therefore made the following decisions:

■ Change the name of this service from the Automatic Vehicle Monitoring (AVM) to the Location and Monitoring Service (LMS).

■ Change the terminology used to refer to the two general categories of LMS technologies from ''wideband'' and ''narrowband'' to ''multilateration'' and ''non-multilateration,'' respectively.

■ Permit multilateration LMS systems to locate any object—animate or inanimate—ancillary to their primary vehicular location and monitoring services.

■ Permit LMS systems to transmit and receive status and instructional information, both non-voice and voice, related to the location and monitoring of a mobile unit and permit LMS systems to interconnect with the Public Switched Network (PSN) on a restricted basis.

■ Expand LMS license eligibility to all entities to be licensed under Part 90 of our Rules and allow service in the 902–928 MHz band to be provided by LMS licensees to both individuals and the Federal Government on a commercial basis to paying subscribers.

■ Clarify what constitutes harmful interference to multilateration licensees by unlicensed Part 15 devices and amateur operations.

■ Allocate an additional 8 MHz of spectrum in the 902–928 MHz band for LMS use, permitting the entire band to be used for this purpose. Adopt a spectrum allocation scheme for the 902–928 MHz band that assigns separate sub-bands for multilateration and non-multilateration operations as follows:

Band (MHz)	System license
902.000–904.000	Non-multilateration.
904.000–909.750	Multilateration.
909.750–919.750	Non-multilateration.
919.750–921.750	Multilateration and non-multilateration.
921.750–927.250	Multilateration.
927.250–928.000	Multilateration[1].

[1] This is not considered a separate sub-band. Each licensee in the 904.000–909.75 MHz, 919.750–921.750 MHz and 921.750–927.250 MHz sub-bands will obtain a narrowband assignment at the top of the 902–928 MHz band for forward link operations, as follows: 927.250–927.500 MHz for the 921.750–927.250 MHz band; 927.500–927.750 MHz for the 919.750–921.750 band; and 927.750–928.000 MHz for the 904.000–909.750 band.

■ License exclusive multilateration LMS systems within each Mayor Trading Area (MTA)[1] and four additional MTA-like service areas[2] in the three sub-bands designated above, and resolve mutually exclusive applications through competitive bidding.

■ Grandfather base stations of multilateration system licensees authorized as of February 3, 1995 and constructed and in operation by April 1, 1996.

■ License non-multilateration systems on a shared basis in the three sub-bands designated above.

■ Allow multilateration licensees to commence operations only after demonstrating interference with Part 15 operations is minimized.

Ordering Clauses

11. Accordingly, *It is Ordered* that, pursuant to the authority of Sections 4(i), 302, 303(r), and 332(a)(2) of the Communications Act of 1934, as amended, 47 U.S.C. §§ 154(i), 302, 303(r), and 332(a), Parts 2 and 90 of the Commission's Rules, 47 CFR Parts 2 and 90, *Are Amended* as set forth below, effective on April 24, 1995.

12. The Petition for Rule Making filed on January 13, 1994 by the American Radio Relay League *Is Denied*.

13. For further information concerning this *Report and Order*, contact Thomas S. Dombrowsky, Martin D. Liebman or John J. Borkowski of the Wireless Telecommunications Bureau at (202) 418–0620.

Final Regulatory Flexibility Analysis

Pursuant to Section 603 of Title 5, United States Code, 5 U.S.C. 603, an Initial Regulatory Flexibility Analysis was incorporated in the Notice of Proposed Rule Making in PR Docket No. 93–61. Written comments on the proposals in the Notice, including the Initial Regulatory Flexibility Analysis, were requested.

Pursuant to Section 604 of Title 5, United States Code, 5 U.S.C. 604, a Final Regulatory Flexibility Analysis was incorporated in the Report and Order in PR Docket No. 93–61 and is presented below.

A. Need and Purpose of the Action

The rules adopted herein will enhance use of the 902–928 MHz band

[1] Rand-McNally organizes the 50 states and the District of Columbia into 47 MTAs. *See* Rand-McNally Commercial Atlas and Marketing Guide, 36–39, (123d ed. 1992). PCIA and Rand-McNally have recently entered into an agreement regarding the use of Rand-McNally's market area designations (i.e., Basic Trading Areas (BTAs) and Major Trading Areas (MTAs)) for the licensing of various mobile radio services. LMS is not covered by this agreement. The listings of the Major Trading Areas, including the counties, parishes and census divisions that comprise each MTA, are available for public inspection in the Office of Engineering and Technology's Technical Information Center, 2nd Floor, 2000 M Street NW., Washington, D.C.

[2] The four additional regions are: (1) Guam and the Northern Mariana Islands; (2) the Commonwealth of Puerto Rico and the U.S. Virgin Islands; (3) American Samoa; and (4) Alaska will be treated as a single area separate from the Seattle MTA. This is consistent with our MTA-based service area definitions for broadband PCS (see 47 CFR 24.102) and for the Commercial Mobile Radio Services.

for location and monitoring systems. These rules replace the existing interim rules that govern automatic vehicle monitoring systems. The new rules create a more stable environment for LMS system licensees and provide much needed flexibility for operators of such systems.

B. Issues Raised in Response to the Initial Regulatory Flexibility Analysis

There were no comments submitted in response to the Initial Regulatory Flexibility Analysis.

C. Significant Alternatives Considered and Rejected

All significant alternatives are discussed in this *Report and Order.*

List of Subjects

47 CFR Part 2

Allocations, Radio.

47 CFR Part 90

Business and industry, Radio.

Federal Communications Commission.

William F. Caton,

Acting Secretary.

Amendatory Text

Parts 2 and 90 of Chapter I of Title 47 of the Code of Federal Regulations are amended as follows:

PART 2—FREQUENCY ALLOCATIONS AND RADIO TREATY MATTERS; GENERAL RULES AND REGULATIONS

1. The authority citation for Part 2 continues to read as follows:

Authority: Sec. 4, 302, 303, and 307 of the Communications Act of 1934, as amended, 47 U.S.C. Sections 154, 154(i), 302, 303, 303(r), and 307, unless otherwise noted.

2. Section 2.106, the Table of Frequency Allocations, is amended by revising the entries for 902–928 MHz in the United States table (Cols. 4 through 7) and by revising United States footnotes US218 and US275 to read as follows:

§ 2.106 Table of Frequency Alllocations.

* * * * *

International table			United States table		FCC use designators	
Region 1—allocation MHz	Region 2—allocation MHz	Region 3—allocation MHz	Government	Non-Government	Rule part(s)	Special-use frequencies
			Allocation MHz	Allocation MHz		
(1)	(2)	(3)	(4)	(5)	(6)	(7)
*	*	*	*	*	*	*
* * *	* * *	* * *	902–928 RADIO-LOCATION. 707 US215 US218 US267 US275 G11 G59.	902–928 ..... 707 US215 US218 US267 US275.	Private Land Mobile (90). Amateur (97).	915±13 MHz: Industrial, scientific and medical frequency.
*	*	*	*	*	*	*

United States (US) Footnotes

* * * * *

US218 The band 902–928 MHz is available for Location and Monitoring Service (LMS) systems subject to not causing harmful interference to the operation of all Government stations authorized in these bands. These systems must tolerate interference from the operation of industrial, scientific, and medical (ISM) devices and the operation of Government stations authorized in these bands.

* * * * *

US275 The band 902–928 MHz is allocated on a secondary basis to the amateur service subject to not causing harmful interference to the operations of Government stations authorized in this band or to Location and Monitoring Service (LMS) systems. Stations in the Amateur service must tolerate any interference from the operations of industrial, scientific, and medical (ISM) devices, LMS systems, and the operations of Government stations authorized in this band. Further, the Amateur Service is prohibited in those portions of Texas and New Mexico bounded on the south by latitude 31°41′ North, on the east by longitude 104°11′ West, and on the north by latitude 34°30′ North, and on the west by longitude 107°30′ West; in addition, outside this area but within 150 miles of these boundaries of White Sands Missile Range the service is restricted to a maximum transmitter peak envelope power output of 50 watts.

PART 90—PRIVATE LAND MOBILE RADIO SERVICES

1. The authority citation for Part 90 continues to read as follows:

Authority: Secs. 4, 303, and 332, 48 Stat. 1066, 1082, as amended; 47 U.S.C. 154, 303, and 332, unless otherwise noted:

2. Section 90.7 is amended by removing the entry for *Automatic Vehicle Monitoring* and adding new definitions for *Basic trading areas, Forward links, Location and Monitoring Service (LMS), Major trading areas, Multilateration LMS System,* and *Non-multilateration LMS System* in alphabetical order to read as follows:

§ 90.7 Definitions.

* * * * *

Basic trading areas. Service areas that are based on the Rand McNally *1992 Commercial Atlas & Marketing Guide,* 123rd Edition, at pages 38–39, with the following additions licensed separately as BTA-like areas: American Samoa; Guam, Northern Mariana Islands; Mayaguez/Aguadilla-Ponce, Puerto Rico; San Juan, Puerto Rico; and the United States Virgin Islands. The Mayaguez/Aguadilla-Ponce BTA-like service area consists of the following municipios: Adjuntas, Aguada, Aguadilla, Anasco, Arroyo, Cabo Rojo, Coamo, Guanica, Guayama, Guayanilla, Hormigueros, Isabela, Jayuya, Juana Diaz, Lajas, Las Marias, Maricao, Maunabo, Mayaguez, Moca, Patillas, Penuelas, Ponce, Quebradillas, Rincon, Sabana Grande, Salinas, San German, Santa Isabel, Villalba, and Yauco. The San Juan BTA-like service area consists of all other municipios in Puerto Rico.

* * * * *

Forward links. Transmissions in the frequency bands specified in § 90.357(a) and used to control and interrogate the mobile units to be located by multilateration LMS systems.

* * * * *

Location and Monitoring Service (LMS). The use of non-voice signaling methods to locate or monitor mobile radio units. LMS systems may transmit and receive voice and nonvoice status

and instructional information related to such units.

* * * * *

Major trading areas. Service areas based on the Rand McNally *1992 Commercial Atlas & Marketing Guide,* 123rd Edition, at pages 38–39, with the following exceptions and additions:

(a) Alaska is separated from the Seattle MTA and is licensed separately.

(b) Guam and the Northern Mariana Islands are licensed as a single MTA-like area.

(c) Puerto Rico and the United States Virgin Islands are licensed as a single MTA-like area.

(d) American Samoa is licensed as a single MTA-like area.

* * * * *

Multilateration LMS System. A system that is designed to locate vehicles or other objects by measuring the difference of time of arrival, or difference in phase, of signals transmitted from a unit to a number of fixed points or from a number of fixed points to the unit to be located.

* * * * *

Non-multilateration LMS System. A system that employs any of a number of non-multilateration technologies to transmit information to and/or from vehicular units.

* * * * *

3. Section 90.101 is revised to read as follows:

§ 90.101 Scope.

The Radiolocation Service accommodates the use of radio methods for determination of direction, distance, speed, or position for purposes other than navigation. Rules as to eligibility for licensing, permissible communications, frequency available, and any special requirements are set forth in § 90.103. Provisions for the Location and Monitoring Service (LMS) are contained in subpart M of this part.

§ 90.103 [Amended]

4. Section 90.103 is amended by removing paragraph (d) and by redesignating existing paragraph (e) as paragraph (d).

5. Section 90.155 is amended by revising paragraph (a) and adding new paragraphs (d) and (e) to read as follows:

§ 90.155 Time in which station must be placed in operation.

(a) All stations authorized under this part, except as provided in paragraphs (b) and (d) of this section and in §§ 90.629 and 90.631(f), must be placed in operation within eight (8) months from the date of grant or the authorization cancels automatically and must be returned to the Commission.

* * * * *

(d) Multilateration LMS systems authorized in accordance with § 90.353 must be constructed and placed in operation within twelve (12) months from the date of grant or the authorization cancels automatically and must be returned to the Commission. MTA-licensed multilateration LMS systems will be considered constructed and placed in operation if such systems construct a sufficient number of base stations that utilize multilateration technology (*see* paragraph (e) of this section) to provide multilateration location service to a substantial portion of at least one BTA in the MTA.

(e) A multilateration LMS station will be considered constructed and placed in operation if it is built in accordance with its authorized parameters and is regularly interacting with one or more other stations to provide location service, using multilateration technology, to one or more mobile units. Specifically, LMS multilateration stations will only be considered constructed and placed in operation if they are part of a system that can interrogate a mobile, receive the response at 3 or more sites, compute the location from the time of arrival of the responses and transmit the location either back to the mobile or to a subscriber's fixed site.

6. Section 90.179 is amended by revising paragraph (f) to read as follows:

§ 90.179 Shared use of radio stations.

* * * * *

(f) Above 800 MHz, shared use on a for-profit private carrier basis is permitted only by SMR, Private Carrier Paging, and LMS licensees. See subparts M, P, and S of this part.

* * * * *

7. Section 90.203 is amended by adding new paragraph (b)(7) to read as follows:

§ 90.203 Type acceptance required.

* * * * *

(b) * * *

(7) Transmitters imported and marketed prior to April 1, 1996 for use by LMS systems.

* * * * *

8. Section 90.205(b) is amended by revising the second column heading, by adding entries for 902 to 927.25 and 927.25 to 928 MHz bands to the table in numerical order, and by adding footnote 13 to read as follows:

§ 90.205 Power.

* * * * *

(b) * * *

Frequency range (megahertz)	Maximum output power (watts)	Maximum effective radiated power (watts)
*	*	*
902 to 927.25		[13] 30
927.25 to 928		300
*	*	*

* * * * *

[13] Effective radiated power shall be measured as peak envelope power.

* * * * *

§ 90.207 [Amended]

9. Paragraph (g) of Section 90.207 is removed and reserved.

10. Section 90.209 is amended by adding new paragraphs (b)(10) and (m) to read as follows:

§ 90.209 Bandwidth limitations.

* * * * *

(b) * * *

(10) The maximum authorized bandwidth shall be 12 MHz for non-multilateration LMS operations in the band 909.75–921.75 MHz and 2 MHz in the band 902.00–904.00 MHz. The maximum authorized bandwidth for multilateration LMS operations shall be 5.75 MHz in the 904.00–909.75 MHz band; 2 MHz in the 919.75–921.75 MHz band; 5.75 MHz in the 921.75–927.25 MHz band and its associated 927.25–927.50 MHz narrowband forward link; and 8.00 MHz if the 919.75–921.75 MHz and 921.75–927.25 MHz bands and their associated 927.25–927.50 MHz and 927.50–927.75 MHz narrowband forward links are aggregated.

* * * * *

(m) For transmitters authorized under Subpart M of this part that operate in the 902–928 MHz bank, the peak power of any emission shall be attenuated below the power of the highest emission contained within the licensee's LMS sub-band in accordance with the following schedule:

(1) On any frequency within the authorized bandwidth: Zero dB.

(2) On any frequency outside the licensee's LMS sub-band edges (as identified in paragraph (m)(5) of this section): 55 + 10 log(P) dB where (P) is the highest emission (watts) of the transmitter inside the licensee's LMS sub-band.

(3) The resolution bandwidth of the instrumentation used to measure the emission power shall be 100 kHz. If a video filter is used, its bandwidth shall not be less than the resolution bandwidth.

(4) Emission power (P) shall be measured in peak values.

(5) The LMS sub-band edges for multilateration systems for which emissions must be attenuated are 904.00, 909.75, 919.75, 921.75, 927.50, 927.75 and 928.00 MHz. If the 919.75–921.75 and 921.75–972.25 MHz sub-bands are aggregated by a single licensee, the emission mask limitations at the band edges at 921.75 and 927.50 MHz may be ignored. The LMS sub-bank edges for non-multilateration systems for which emissions must be attenuated are 902.00,904.00, 909.75 and 921.75 MHz.

11. Section 90.213(a) is amended by adding an entry for the 902 to 928 MHz band to the table in numerical order to read as follows:

§ 90.213 Frequency tolerance.

(a) * * *

FREQUENCY TOLERANCE

Frequency range	Fixed and base stations		Mobile stations	
	Over 200W output power	200W or less output power	Over 2W output power	2W or less output power
*	*	*	*	*
902 to 928 ..	.00025	.00025	.00025	.00025
*	*	*	*	*

* * * * *

§ 90.239 [Removed and Reserved].

12. Section 90.239 is removed and reserved.

13. Subpart M is added to Part 90 to read as follows:

Subpart M—Transportation Infrastructure Radio Service

Sec.
90.350 Scope.
90.351 Location and Monitoring Service.
90.353 LMS operations in the 902–928 MHz band.
90.355 LMS operations below 512 MHz.
90.357 Frequencies for LMS systems in the 902–928 MHz band.
90.359 Field strength limits for MTA-licensed LMS systems.
90.361 Interference from part 15 and Amateur operations.
90.363 Grandfathering provisions for existing AVM Licensees.

Subpart M—Transportation Infrastructure Radio Service

§ 90.350 Scope.

The Transportation Infrastructure Radio Service is for the purpose of integrating radio-based technologies into the nation's transportation infrastructure and to develop and implement the nation's intelligent transportation systems. It includes the Location and Monitoring Service (LMS). Rules as to eligibility for licensing, frequencies available, and any special requirements for services in the Transportation Infrastructure Radio Service are set forth in this Subpart.

§ 90.351 Location and Monitoring Service.

These provisions authorize the licensing of systems in the Location and Monitoring Service (LMS). LMS systems utilize non-voice radio techniques to determine the location and status of mobile radio units. LMS licensees authorized to operate a system in the 902–928 MHz band may serve individuals, federal government agencies, and entities eligible for licensing in this part 90.

(a) Each application to license an LMS system shall include the following supplemental information:

(1) A detailed description of the manner in which the system will operate, including a map or diagram.

(2) The necessary or occupied bandwidth of emission, whichever is greater.

(3) The data transmission characteristics as follows:

(i) The vehicle location update rates;

(ii) Specific transmitter modulation techniques used;

(iii) For codes and timing scheme: A table of bit sequences and their alphanumeric or indicator equivalents, and a statement of bit rise time, bit transmission rates, bit duration, and interval between bits;

(iv) A statement of amplitude-versus-time of the interrogation and reply formats, and an example of a typical message transmission and any synchronizing pulses utilized.

(4) A plan to show the implementation schedule during the initial license term.

(b) LMS stations are exempted from the identification requirements of § 90.425; however, the Commission may impose automatic station identification requirements when determined to be necessary for monitoring and enforcement purposes.

§ 90.353 LMS operations in the 902–928 MHz band.

LMS systems may be authorized within the 902–928 MHz band, subject to the conditions in this section. LMS licensees are required to maintain whatever records are necessary to demonstrate compliance with these provisions and must make these records available to the Commission upon request:

(a) LMS operations will not cause interference to and must tolerate interference from industrial, scientific, and medical (ISM) devices and radiolocation Government stations that operate in the 902–928 MHz band.

(b) LMS systems are authorized to transmit status and instructional messages, either voice or non-voice, so long as they are related to the location or monitoring functions of the system.

(c) LMS systems may utilize store and forward interconnection, where either transmissions from a vehicle or object being monitored are stored by the LMS provider for later transmission over the public switched network (PSN), or transmissions received by the LMS provider from the PSN are stored for later transmission to the vehicle or object being monitored. Real-time interconnection between vehicles or objects being monitored and the PSN will only be permitted to enable emergency communications related to a vehicle or a passenger in a vehicle. Such real-time, interconnected communications may only be sent to or received from a system dispatch point or entities eligible in the Public Safety or Special Emergency Radio Services. *See* subparts B and C of this part.

(d) Multilateration LMS systems will be authorized on a primary basis within the bands 904–909.75 MHz and 921.75–927.25 MHz. Additionally, multilateration and non-multilateration systems will share the 919.75–921.75 MHz band on a co-equal basis. Licensing will be on the basis of Major Trading Area (MTA) service areas for multilateration systems, with one exclusive MTA license being issued for each of these three sub-bands. Except as provided in paragraph (f) of this section, multilateration MTA licensees may be authorized to operate on only one of the three multilateration bands within a given MTA. Additionally, MTA multilateration LMS licenses will be conditioned upon the licensee's ability to demonstrate through actual field tests that their systems do not cause unacceptable levels of interference to 47 CFR part 15 devices.

(e) Multilateration MTA-licensed systems and grandfathered AVM systems (*see* § 90.363) are authorized on a shared basis and must cooperate in the selection and use of frequencies in accordance with § 90.173(b).

(f) Multilateration MTA licensees may be authorized to operate on both the 919.75–921.75 MHz and 921.75–927.25 MHz bands within a given MTA (*see* § 90.209(b)(10)).

(g) Multilateration LMS systems whose primary operations involve the provision of vehicle location services, may provide non-vehicular location services.

(h) Non-multilateration stations are authorized to operate on a shared, non-exclusive basis in the 902–904 MHz and 909.75–921.75 MHz sub-bands. Non-multilateration systems and multilateration systems will share the 919.75–921.75 MHz band on a co-equal basis. Non-multilateration LMS systems may not provide non-vehicular location services. The maximum antenna height above ground for non-multilateration LMS systems is 15 meters.

§ 90.355 LMS operations below 512 MHz.

Applications requiring not more than 25 kHz bandwidth per frequency in the 25–50 MHz, 150–170 MHz, and 450–512 MHz bands may use either base-mobile frequencies currently assigned the applicant, or be assigned base-mobile frequencies available in the service in which eligibility has been established, provided that:

(a) For transmission between vehicles and base stations, each frequency in a single-frequency mode of operation will provide location data for approximately 200 vehicles, or both frequencies in a two-frequency mode of operation will provide location data for approximately 400 vehicles, except that for frequencies in the 450–512 MHz band that are assigned in pairs in accordance with the allocation plan for the band, the requirement is that location data be provided for approximately 200 vehicles for each frequency pair; and a showing is made that 50 percent of the vehicles will be in operation within the system by the end of the second year of the initial license term, and 70 percent will be in operation within the system by the end of the initial license term; except that if these vehicle loading standards will not be met, frequencies will be assigned only on a secondary non-interference basis to any authorized radiotelephony operation.

(b) The minimum separation between a proposed LMS station and the nearest co-channel base station of another licensee operating a voice system is 75 miles (120 km) for a single frequency mode of operation or 35 miles (56 km) for a two-frequency mode of operation. Where the minimum mileage separation cannot be achieved, agreement to the use of F1D, F2D, G1D, G2D or P0N emission must be received from all existing co-channel licensees using voice emissions within the applicable mileage limits. If there is interference with voice operations and required agreement was not received, or operation was authorized on a secondary non-interference basis, the licensee of the LMS system is responsible for eliminating the interference.

(c) Frequencies additional to any assigned under paragraph (a) of this section will not be assigned to the same licensee at any stations located within 64 km (40 miles) of any station in which the licensee holds an interest until each of such licensee's frequencies for LMS operation is shown to accommodate not less than 90 percent of the frequency loading requirements specified in paragraph (a) of this section.

§ 90.357 Frequencies for LMS systems in the 902–928 MHz band.

(a) Multilateration LMS systems will be authorized on the following LMS sub-bands:

LMS Sub-band	Forward Link [1]
904.000–909.750 MHz.	927.750–928.000 MHz.
919.750–921.750 MHz [2].	927.500–927.750 MHz.
921.750–927.250 MHz.	927.250–927.500 MHz.

[1] Forward links for LMS systems may also be contained within the LMS sub-band. However, the maximum allowable power in these sub-bands is 30 watts ERP in accordance with Section 90.205(b).

[2] The frequency band 919.750–921.750 MHz is shared co-equally between multilateration and non-multilateration LMS systems.

(b) Non-multilateration LMS systems will be authorized on the following frequency bands:

LMS Sub-band [1]

902.000–904.000 MHz
909.750–921.750 MHz

[1] Applicants for non-multilateration LMS systems should request only the minimum amount of bandwidth necessary to meet their operational needs.

§ 90.359 Field strength limits for MTA-licensed LMS systems.

MTA-licensed multilateration systems shall limit the field strength of signals transmitted from their base stations to 47 dBuV/m at their MTA boundary.

§ 90.361 Interference from part 15 and Amateur operations.

Operations authorized under parts 15 and 97 of this chapter may not cause harmful interference to LMS systems in the 902–928 MHz band. These operations will not be considered to be causing harmful interference to a multilateration LMS system operating in one of the three MTA sub-bands (*see* § 90.357(a)) if they operate in accordance with the provisions of parts 15 or 97 of this chapter and at least one of the following conditions are met:

(a) It is a field disturbance sensor operating under § 15.245 of this chapter and it is not operating in the 904–909.750 or 919.750–928.000 MHz sub-bands; or

(b) It does not employ an outdoor antenna; or

(c) If it does employ an outdoor antenna, then if:

(1) The directional gain of the antenna does not exceed 6 dBi, or if the directional gain of the antenna exceeds 6 dBi, it reduces its transmitter output power below 1 watt by the proportional amount that the directional gain of the antenna exceeds 6 dBi; and

(2) Either:

(i) The antenna is 5 meters or less in height above ground; or

(ii) The antenna is more than 5 meters in height above ground but less than or equal to 15 meters in height above ground and either:

(A) Adjusts its transmitter output power below 1 watt by 20 log (h/5) dB, where h is the height above ground of the antenna in meters; or

(B) Is providing the final link for communications of entities eligible under subpart B or C of this part 90.

§ 90.363 Grandfathering provisions for existing AVM Licensees.

(a) These provisions authorize grandfathered operation by automatic vehicle monitoring (AVM) systems licensed on or before February 3, 1995. To attain grandfathered status for their stations, existing multilateration AVM licensees must file, on or before May 22, 1995, applications to modify their station licenses to comply with the band plan shown in § 90.357(a). These applications to modify must identify the multilateration sub-band or sub-bands in which the applicants intend to operate their LMS system stations, once their applications to modify have been authorized. The application to modify a license to comply with the band plan shown in § 90.357(a) may also include a modification to specify an alternate site, so long as the alternate site is 2 kilometers or less from the site specified in the original license.

(b) When existing multilateration AVM licensees file applications to modify, as specified in paragraph (a) of this section, they *must* certify that either:

(1) The stations that compose their AVM system were constructed and placed in operation in accordance with § 90.155(e) on or before February 3, 1995; or

(2) The stations were not constructed and placed in operation in accordance with § 90.155(e) on or before February 3, 1995.

(c) Multilateration AVM systems that were constructed and placed in operation on or before February 3, 1995

will be given until April 1, 1998 to convert to the spectrum identified in their LMS system license. Such licensees may continue to operate their systems during this period. Licensees of multilateration AVM constructed and operational systems that do not file applications to modify on or before May 22, 1995, will be permitted to continue operations under the provisions of former Section 90.239 until April 1, 1998 or the end of their original license term, whichever occurs first, at which time such licenses will cancel automatically and will not be renewed.

(d) Multilateration AVM licensees for stations that were not constructed and placed in operation on or before February 3, 1995 must construct their LMS systems and place them in operation on the spectrum identified in their LMS system license on or before April 1, 1996, or their licenses will cancel automatically (see § 90.155(e)). Also, these licenses will cancel automatically on May 22, 1995 unless timely modification applications are filed on or before this date (see paragraph (a) of this section).

(e) Non-multilateration systems licensed in spectrum other than the 902.00–904.00 and 909.75–921.75 MHz bands must modify their licenses by April 1, 1998 to specify operation solely in the bands provided in § 90.357(b) for non-multilateration systems and to operate their systems consistently with the provisions of § 90.353.

[FR Doc. 95–5785 Filed 3–22–95; 8:45 am]

BILLING CODE 6712–01–M

47 CFR Part 73

[MM Docket No. 90–44; RM–7123 and RM–7367]

Radio Broadcasting Services; East Los Angeles, Long Beach, and Frazier Park, California

AGENCY: Federal Communications Commission.

ACTION: Final rule.

SUMMARY: The Commission grants the rule making petition (RM–7123) of Spanish Broadcasting System of Florida, Inc., licensee of Station KLAX-FM, Channel 250B, Long Beach, California, requesting a reallotment of its Class B channel in Long Beach to the community of East Los Angeles, California. *See Notice of Proposed Rule Making,* 55 FR 6808, published February 27, 1990. The Commission dismisses the counterproposal (RM–7367) of Richard A. Cramer, to allot Channel 251A to Frazier Park, California as its first local service.

EFFECTIVE DATE: May 1, 1995.

FOR FURTHER INFORMATION CONTACT: J. Bertron Withers, Jr., Mass Media Bureau, (202) 418–2180.

SUPPLEMENTARY INFORMATION: The Commission ordered modification of the license of Station KLAX-FM, Long Beach, to specify East Los Angeles as the new community of license. Channel 250B can be allotted to East Los Angeles in compliance with the Commission's requirements for minimum interstation distance separations with a site restricted to 18.9 kilometers (11.7 miles) east of East Los Angeles, located at coordinates North Latitude 34–02–45 and West Longitude 118–21–20. Because East Los Angeles is within 320 kilometers (199 miles) of the Mexican border, concurrence of the Mexican government in this proposal was obtained. With this action, the proceeding is terminated.

This is a summary of the Commission's *Report and Order,* MM Docket No. 90–44, adopted March 7, 1995 and released March 17, 1995. The full text of this Commission decision is available for inspection and copying during normal business hours in the FCC Dockets Branch (Room 239), 1919 M Street, NW, Washington, D.C. The complete text of this decision may also be purchased from the Commission's copy contractor, International Transcription Services, (202) 857–3800, 2100 M Street, NW, Suite 140, Washington, DC 20037.

List of Subjects in 47 CFR Part 73

Radio broadcasting.

PART 73—[AMENDED]

1. The authority citation for Part 73 reads as follows:

Authority: Secs. 303, 48 Stat., as amended, 1082; 47 U.S.C. 154, as amended.

§ 73.202 [Amended]

2. Section 73.202(b), the Table of FM Allotments under California, is amended by removing Channel 250B at Long Beach and adding Channel 250B at East Los Angeles.

Federal Communications Commission.

John A. Karousos,

Chief, Allocations Branch, Policy and Rules Division, Mass Media Bureau.

[FR Doc. 95–7124 Filed 3–22–95; 8:45 am]

BILLING CODE 6712–01–F

47 CFR Part 73

[MM Docket No. 90–522; RM–7493, RM–7499]

Radio Broadcasting Services; LaCrosse, Florida and Douglas, Georgia

AGENCY: Federal Communications Commission.

ACTION: Final rule.

SUMMARY: This document allots Channel 258A to LaCrosse, Florida, as that community's first local aural transmission service, at the request of Robert E. Wideman (RM–7499), and denies the substitution of Channel 258C for Channel 258C1 at Douglas, Georgia at the request of WDMG, Inc., (RM–7493). In doing so, this document sets aside the *Report and Order* in this proceeding, upgrading Station WDMG(FM), Douglas, Georgia to Channel 258C. *See* 58 FR 7194, February 5, 1993. Channel 258A can be allotted to LaCrosse in compliance with the Commission's minimum distance separation requirements with a site restriction of 13.1 kilometers (8.2 miles) southeast, in order to avoid a short-spacing to Station WDMG(FM), Channel 258C1, Douglas, Georgia, and Station WQIK(FM), Channel 256C, Jacksonville, Florida, at coordinates North Latitude 29–44–38 and West Longitude 82–19–52. This document also reopens the filing window for Channel 258A at LaCrosse, Florida, which was stayed by a previous *Order. See* 58 FR 16780, March 31, 1993. With this action, this proceeding is terminated.

DATES: Effective May 1, 1995. The window period for filing applications for Channel 258A at LaCrosse, Florida, will be open on May 1, 1995, and close on June 1, 1995.

FOR FURTHER INFORMATION CONTACT: Nancy J. Walls, Mass Media Bureau, (202) 418–2180.

SUPPLEMENTARY INFORMATION: This is a synopsis of the Commission's *Memorandum Opinion and Order,* MM Docket No. 90–522, adopted March 9, 1995, and released March 17, 1995. The full text of this Commission decision is available for inspection and copying during normal business hours in the FCC Reference Center (Room 239), 1919 M Street, NW, Washington, D.C. The complete text of this decision may also be purchased from the Commission's copy contractors, International Transcription Service, Inc., (202) 857–3800, 1919 M Street, NW, Room 246, or 2100 M Street, NW, Suite 140, Washington, D. C. 20037.

List of Subjects in 47 CFR Part 73

Radio broadcasting.

Part 73 of Title 47 of the Code of Federal Regulations is amended as follows:

PART 73—[AMENDED]

1. The authority citation for Part 73 continues to read as follows:

Authority: Secs. 303, 48 Stat., as amended, 1082; 47 U.S.C. 154, as amended.

§ 73.202 [Amended]

2. Section 73.202(b), the Table of FM Allotments under Florida, is amended by adding LaCrosse, Channel 258A.

Federal Communications Commission.

Douglas W. Webbink,

Chief, Policy and Rules Division, Mass Media Bureau.

[FR Doc. 95–7123 Filed 3–22–95; 8:45 am]

BILLING CODE 6712–01–F

Proposed Rules

Federal Register
Vol. 60, No. 56
Thursday, March 23, 1995

This section of the FEDERAL REGISTER contains notices to the public of the proposed issuance of rules and regulations. The purpose of these notices is to give interested persons an opportunity to participate in the rule making prior to the adoption of the final rules.

DEPARTMENT OF AGRICULTURE

Animal and Plant Health Inspection Service

7 CFR Part 201

[Docket No. 93–126–2]

Imported Seed

AGENCY: Animal and Plant Health Inspection Service, USDA.

ACTION: Proposed rule and notice of public hearing.

SUMMARY: We are proposing to expand the list of noxious weed seeds contained in Federal Seed Act regulations to include seeds of all of the weeds listed in the Federal Noxious Weed Act regulations. This rule would allow APHIS to prohibit the entry into the United States of any imported agricultural or vegetable seed shipments containing seeds of noxious weeds listed in the Federal Noxious Weed Act regulations. We believe this action is necessary to prevent the introduction of noxious weeds into the United States.

DATES: Consideration will be given only to comments received on or before April 24, 1995. We also will consider comments made at a public hearing to be held on April 4, 1995, from 9 a.m. until 12 noon.

ADDRESSES: Please send an original and three copies of your comments to Docket No. 93–126–2, Animal and Plant Health Inspection Service, Policy and Program Development, Regulatory Analysis and Development, 4700 River Road Unit 118, Riverdale, MD 20737–1228. Please state that your comments refer to Docket No. 93–126–2. Comments received may be inspected at USDA, room 1141, South Building, 14th Street and Independence Avenue SW, Washington, DC, between 8 a.m. and 4:30 p.m., Monday through Friday, except holidays. Persons wishing to inspect comments are requested to call ahead on (202) 690–2817 to facilitate entry into the comment reading room. The public hearing will be held on April 4, 1995, in room 3A01, 4700 River Road, Riverdale, MD 20737–1228.

FOR FURTHER INFORMATION CONTACT: Ms. Polly Lehtonen, Botanist, Animal and Plant Health Inspection Service, Plant Protection and Quarantine, Biological Assessments And Taxonomic Support, 4700 River Road Unit 133, Riverdale, MD 20737–1228, (301) 734–8896.

SUPPLEMENTARY INFORMATION:

Background

In 1939, Congress enacted the Federal Seed Act (FSA), directing the U.S. Department of Agriculture (USDA), among other things, to regulate foreign commerce in seeds in cooperation with the U.S. Department of Treasury. Title III of the FSA, ''Foreign Commerce,'' requires shipments of imported agricultural and vegetable seeds to be labeled correctly and to be tested for the presence of certain noxious weeds as a condition of entry into the United States. On October 1, 1982, the Agricultural Marketing Service (AMS) of the USDA transferred authority for issuing and enforcing regulations under Title III of the FSA (7 CFR 201.39 through 201.47b, 201.66, and 201.101 through 201.230) to the Animal and Plant Health Inspection Service (APHIS).

On September 15, 1994, we published an advance notice of proposed rulemaking in the **Federal Register** (59 FR 47286–47287, Docket No. 93–126–1) announcing our plans to revise the FSA regulations to reflect amendments to the FSA, developments in the seed industry, and the transfer of regulatory authority for Title III of the FSA from AMS to APHIS. We also noted our intention to revise the list of noxious weed seeds contained in the regulations promulgated under the FSA to include seeds of all the noxious weeds listed in the regulations promulgated under the Federal Noxious Weed Act.

We have decided to proceed separately with this proposal to revise the list of noxious weeds contained in the regulations, for reasons explained below. We are still reviewing comments concerning the other issues raised in the advance notice, and plan to publish another proposed rule at a later date. We also will hold a public hearing in connection with that proposed rule.

We solicited comments on the advance notice of proposed rulemaking for 45 days ending October 31, 1994. By that date we received 13 comments from seed companies and importers, State governments, and universities. Four of those comments remarked on our plan to revise the list of noxious weed seeds contained in the FSA regulations to include seeds of all the noxious weeds listed in the Federal Noxious Weed Act regulations. Two of these comments supported our actions and two raised relevant questions. These questions are addressed below.

Under § 201.108 of the FSA regulations, seeds of 11 types of weeds are considered to be noxious when found in shipments of imported agricultural or vegetable seeds. If seeds of these weeds are found in a shipment of imported agricultural or vegetable seeds in amounts greater than the tolerances listed in § 201.66, APHIS prohibits the entry of that shipment into the United States (except possibly for supervised cleaning or repackaging for re-export). However, if seeds of noxious weeds listed in the Federal Noxious Weed Act regulations are found in a shipment of imported agricultural or vegetable seeds subject to the FSA regulations, APHIS currently may not prohibit the entry of that shipment into the United States based on such contamination. The Federal Noxious Weed Act (7 U.S.C. 2801–2813) specifically provides that it does not apply to shipments of seed subject to the FSA. Shipments of agricultural and vegetable seeds are subject to the FSA.

This prohibition increases the chances that noxious weeds listed in the Federal Noxious Weed Act regulations, but not in the FSA regulations, may be introduced into the United States from contaminated shipments of agricultural or vegetable seeds. In fact, since 1988, APHIS has found noxious weeds listed in the Federal Noxious Weed Act regulations in two shipments of imported agricultural and vegetable seed. In 1988, APHIS discovered seed of the noxious weed serrated tussock (*Nassella trichotoma* (Nees) Hackel ex Arechavaleta) in a shipment of lawn grass seed imported from Argentina. More recently, in September of 1994, APHIS discovered seed of the noxious weed goatsrue (*Galega officinalis* L.) in a shipment of carrot seed imported from Chile.

We are proposing, therefore, to expand the list of noxious weed seeds contained in the FSA regulations to

include seeds of all of the noxious weeds listed in the Federal Noxious Weed Act regulations. As a result of this action, APHIS would have the authority to prohibit the entry of shipments of imported agricultural and vegetable seed containing seed of the noxious weeds currently listed in the Federal Noxious Weed Act regulations. We have decided to proceed with this proposal separately from other issues identified in the advance notice of proposed rulemaking mentioned above due to the urgent need to expand APHIS authority in this matter, as underscored by the recent detection of seed of the noxious weed goatsrue in imported carrot seed.

Tolerances

Under § 201.66 of the FSA regulations, agricultural or vegetable seed imports may enter the United States if they contain only small amounts, or ''tolerances,'' of the noxious weed seeds specified in § 201.108. We propose to preserve these tolerances for the weed seeds currently listed in § 201.108, except for species of *Cuscuta*. Currently, all species of *Cuscuta* are listed in § 201.108 (with tolerances) and several are also listed in the Federal Noxious Weed Act regulations (without tolerances). Since many seeds of *Cuscuta* species plants are indistinguishable from each other, we are proposing to retain tolerances for none. Thus, we would reduce the risk that *Cuscuta* species classified as noxious weeds under the Federal Noxious Weed Act regulations would enter the United States in agricultural or vegetable seeds. Also, we are proposing to establish no tolerances for the other noxious weed seeds that are to be added to the FSA regulations from the Federal Noxious Weed Act regulations. There are no tolerances for these weeds under the Federal Noxious Weed Act regulations.

Also, we are proposing to add a new § 201.108(b). This paragraph would state that the allowable tolerance for certain noxious weed seeds in import shipments of agricultural and vegetable seeds would be two weed seeds in the minimum amount of seed required to be examined. Shipments containing three or more noxious weed seeds may not be imported into the United States. If two noxious weed seeds are found during the initial examination, a second sample will be taken and examined. If two or fewer noxious weed seeds are found in the second examination, the shipment from which the seeds were drawn may be imported into the United States. If three or more noxious weed seeds are found in the second examination, the shipment may not be imported into the United States.

Miscellaneous

We are proposing to revise the list of noxious weed seeds in the FSA regulations by updating the taxonomical names of several of the weeds listed. Specifically, concerning the three species of whitetop or hoary cress currently listed in the regulations, *Lepidium draba* (L.) and *Lepidium repens* (Schrenk) Boiss. would be redesignated as *Cardaria draba* (L.) Desv., and *Hymenophysa pubescens* C. A. Mey. would be redesignated as *Cardaria pubescens* (C. A. Mey.) Jarmol. These changes will bring the list of noxious weed seeds under the FSA regulations into accord with current botanical nomenclature. These changes would not affect the Federal Noxious Weed Act regulations, as these seeds are not listed under those regulations.

Comments on the Advance Notice of Proposed Rulemaking

As stated above, of the 13 comments we received on the advance notice of proposed rulemaking, four remarked on our plan to revise the list of noxious weeds in the FSA regulations. Two of the comments supported our plan. The other two raised the following questions.

One comment, from a State government, inquired as to whether APHIS would consider adding seeds of weeds appearing on State noxious weed lists to the list of noxious weeds in the FSA regulations. We would consider adding a weed to the noxious weed list in the FSA regulations (as well as the noxious weed list in the Federal Noxious Weed Act regulations) upon receipt and review of information regarding that weed.

The other comment, from a trade association, encouraged APHIS to undertake a thorough scientific review of the list of noxious weeds in the FSA regulations to confirm its scientific basis and applicability to today's trade. We welcome for review any information indicating a need to revise the list of noxious weeds in the FSA regulations (or the Federal Noxious Weed Act regulations).

Public Hearing

As required by 7 U.S.C. 1592(c), APHIS will host a public hearing to provide interested persons a full opportunity to present their views regarding this proposal. At this public hearing, we will also consider comments on a proposed rule to amend the Federal Noxious Weed Act regulations. (See APHIS Docket No. 94–050–1, published in the Proposed Rules Section of this issue of the **Federal Register**). The hearing will be held on April 4, 1995, in room 3A01, 4700 River Road, Riverdale, MD 20737–1228.

A representative of APHIS will preside at the public hearing. Any interested person may appear and be heard in person, by attorney, or by other representative. Persons who wish to speak at the public hearing will be asked to sign in, listing their names and organizations.

The public hearing will begin at 9 a.m. local time and is scheduled to end at 12 noon local time. However, the hearing may be terminated at any time after it begins if all persons desiring to speak have been heard. We ask that anyone who reads a statement provide two copies to the presiding officer at the hearing. If the number of speakers at the hearing warrants it, the presiding officer may limit the time for each presentation so that everyone wishing to speak has the opportunity.

The purpose of the hearing is to give interested persons an opportunity for oral presentations of data, views, and arguments. Questions about the content of the proposed rules may be part of the commenters' oral presentations. However, neither the presiding officer nor any other representative of APHIS will respond to comments at the hearing, except to clarify or explain provisions of the proposed rules.

Executive Order 12866 and Regulatory Flexibility Act

This proposed rule has been reviewed under Executive Order 12866. The rule has been determined to be not significant for purposes of Executive Order 12866 and, therefore, has not been reviewed by the Office of Management and Budget.

We are proposing to expand the list of noxious weed seeds contained in FSA regulations by including the seeds of all weeds listed in Federal Noxious Weed Act regulations. Currently APHIS can prohibit the entry of shipments of imported agricultural or vegetable seeds contaminated with noxious weed seeds listed in the FSA regulations, but not shipments which contain weed seeds listed only in the Federal Noxious Weed Act regulations. The change would authorize APHIS to prohibit the entry of any agricultural or vegetable seed shipments containing noxious weed seeds listed in the Federal Noxious Weed Act regulations.

The weeds already established in the United States pose serious threats to the U.S. supplies of food and fiber, causing losses in both yield and quality of crops. As a result of increased weed

competition, yields decline, production decreases, exports decrease, and prices of commodities increase. Weed management has a major influence on the production decisions made by agricultural producers. The use of additional land, livestock, labor, equipment and fuel, herbicides, insecticides and fungicides, fertilizers, and irrigation water may all be required in order to maintain economical commodity production when weeds are present.

Between 1989 and 1991, weeds in crops and forage cost producers using herbicides about $4.1 billion annually and cost producers unable to use herbicides about $19.6 billion annually. (These estimates represent the upper limits of costs related to weeds.) Although such losses varied between crops and regions, we estimate yield reduction to have been between 10 and 20 percent. Furthermore, certain weeds in pasture lands not only reduce production and availability but also poison livestock. Livestock losses related to weeds are estimated at about 3 to 5 percent annually.

Many of the nonindigenous weed species listed in the Federal Noxious Weed Act regulations attack important farm crops in their native lands. Among farm products attacked by such weeds are corn, wheat, sorghum, tobacco, tomatoes, sugarcane, potatoes, grapes, sunflowers, rice, carrots, and pasture grasses. These crops generate an annual income of approximately $50 billion in the United States. Additionally, these agricultural commodities account for about an estimated $19 billion in U.S. exports. Therefore, even if yield losses related to new weeds were much less than the average loss related to established weeds (10 to 20 percent), the economic impact related to their introduction would be substantial.

Very few agricultural and vegetable seed shipments have been found to be contaminated with seeds of weeds listed in the Federal Noxious Weed Act regulations. The recent interception of goatsrue seeds in a carrot seed shipment from Chile was the first case of a noxious weed listed in the Federal Noxious Weed Act regulations, but not under the FSA regulations, being found in an agricultural or vegetable seed shipment since serrated tussock seed was found in a lawn grass seed shipment 6 years ago.

Goatsrue is a perennial weed that competes with and reduces yields of forage plants in moist or irrigated pastures, grassland, marshy areas, river banks, and along roadsides. The cost of eradicating goatsrue already introduced has been substantial to the agency. Since the eradication program began in 1981, the agency has appropriated about $1.7 million to the ongoing effort.

Although we could not prohibit the entry of the imported carrot seed based on its contamination with goatsrue seed, the importer agreed not to distribute the seed in the United States. However, had we had the authority to prohibit the entry of the shipment based on its contamination with goatsrue, and had the importer subsequently destroyed the contaminated seed, we estimate he would have incurred a loss of about $24,000. This sort of loss is insubstantial compared with the potential agricultural costs and production losses that could result from the introduction of a noxious weed.

Under these circumstances, the Administrator of the Animal and Plant Health Inspection Service has determined that this action would not have a significant economic impact on a substantial number of small entities.

Executive Order 12778

This proposed rule has been reviewed under Executive Order 12778, Civil Justice Reform. If this proposed rule is adopted: (1) All State and local laws and regulations that are inconsistent with this rule will be preempted; (2) no retroactive effect will be given to this rule; and (3) administrative proceedings will not be required before parties may file suit in court challenging this rule.

Paperwork Reduction Act

This rule contains no information collection or recordkeeping requirements under the Paperwork Reduction Act of 1980 (44 U.S.C. 3501 *et seq.*).

List of Subjects in 7 CFR Part 201

Advertising, Agricultural commodities, Imports, Labeling, Reporting and recordkeeping requirements, Seeds, Vegetables.

Accordingly, 7 CFR part 201 would be amended as follows:

PART 201—FEDERAL SEED ACT REGULATIONS

1. The authority citation for part 201 would continue to read as follows:

Authority: 7 U.S.C. 1592.

§ 201.66 [Removed and reserved]

2. Section 201.66 would be removed and reserved.

3. Section 201.108 would be revised to read as follows:

§ 201.108 Noxious weed seeds.

(a) Seeds of the following plants shall be considered noxious weed seeds.

[1] *Acroptilon repens* (L.) DC. (=*Centaurea repens* L.) (=*Centaurea picris*)
Aeginetia spp.
Ageratina adenophora (Sprengel) King & Robinson
Alectra spp.
Alternanthera sessilis (L.) R. Brown ex de Candolle
Asphodelus fistulosus L.
Avena sterilis L. (including *Avena ludoviciana* Durieu)
Azolla pinnata R. Brown
Borreria alata (Aublet) de Candolle
[1]*Cardaria draba* (L.) Desv.
[1]*Cardaria pubescens* (C. A. Mey.) Jarmol.
Carthamus oxycantha M. Bieberstein
[1]*Convolvulus arvensis* L.
Chrysopogon aciculatus (Retzius) Trinius
[1]*Cirsium arvense* (L.) Scop.
Commelina benghalensis L.
Crupina vulgaris Cassini
Cuscuta spp.
Digitaria abyssinica (=D. scalarum)
Digitaria velutina (Forsskal) Palisot de Beauvois
Drymaria arenarioides Humboldt & Bonpland ex Roemer & Schultes
Eichhornia azurea (Swartz) Kunth
[1]*Elytrigia repens* (L.) Desv. (=*Agropyron repens* (L.) Beauv.)
Emex australis Steinheil
Emex spinosa (L.) Campdera
[1]*Euphorbia esula* L.
Galega officinalis L.
Heracleum mantegazzianum Sommier & Levier
Hydrilla verticillata (Linnaeus f.) Royle
Hygrophila polysperma T. Anderson
Imperata brasiliensis Trinius
Imperata cylindrica (L.) Raeuschel
Ipomoea aquatica Forsskal
Ipomoea triloba L.
Ischaemum rugosum Salisbury
Lagarosiphon major (Ridley) Moss
Leptochloa chinensis (L.) Nees
Limnophila sessiliflora (Vahl) Blume
Lycium ferocissimum Miers
Melaleuca quinquenervia (Cav.) Blake
Melastoma malabathricum L.
Mikania cordata (Burman f.) B. L. Robinson
Mikania micrantha Humboldt, Bonpland, & Kunth
Mimosa invisa Martius
Mimosa pigra L. var. *pigra*
Monochoria hastata (L.) Solms-Laubach
Monochoria vaginalis (Burman f.) C. Presl
Nassella trichotoma (Nees) Hackel ex Arechavaleta
Opuntia aurantiaca Lindley
Orobanche spp.
Oryza longistaminata A. Chevalier & Roehrich
Oryza punctata Kotschy ex Steudel
Oryza rufipogon Griffith
Ottelia alismoides (L.) Pers.
Paspalum scrobiculatum L.
Pennisetum clandestinum Hochstetter ex Chiovenda
Pennisetum macrourum Trinius
Pennisetum pedicellatum Trinius
Pennisetum polystachion (L.) Schultes
Prosopis alapataco R. A. Philippi
Prosopis argentina Burkart
Prosopis articulata S. Watson
Prosopis burkartii Munoz
Prosopis caldenia Burkart

Prosopis calingastana Burkart
Prosopis campestris Grisebach
Prospis castellanosii Burkart
Prosopis denudans Bentham
Prosopis elata (Burkart) Burkart
Prosopis farcta (Solander ex Russell) Macbride
Prosopis ferox Grisebach
Prosopis fiebrigii Harms
Prosopis hassleri Harms
Prosopis humilis Gillies ex Hooker & Arnott
Prosopis kuntzei Harms
Prosopis pallida (Humboldt & Bonpland ex Willdenow) Humboldt, Bonpland, & Kunth
Prosopis palmeri S. Watson
Prosopis reptans Bentham var. *reptans*
Prosopis rojasiana Burkart
Prosopis ruizlealii Burkart
Prosopis ruscifolia Grisebach
Prosopis sericantha Gillies ex Hooker & Arnott
Prosopis strombulifera (Lamarck) Bentham
Prosopis torquata (Cavanilles ex Lagasca y Segura) de Candolle
Rottboellia cochinchinensis (Lour.) Clayon (=*R. exaltata* (L.) L. f.)
Rubus fruticosus L. (complex)
Rubus moluccanus L.
Saccharum spontaneum L.
Sagittaria sagittifolia L.
Salsola vermiculata L.
Salvinia auriculata Aublet
Salvinia biloba Raddi
Salvinia herzogii de la Sota
Salvinia molesta D.S. Mitchell
Setaria pallide-fusca (Schumacher) Stapf & Hubbard
Solanum torvum Swartz
Solanum viarum Dunal
[1] *Sonchus arvensis* L.
[1] *Sorghum halepense* (L.) Pers.
Sparganium erectum L.
Striga spp.
Tridax procumbens L.
Urochloa panicoides Beauvois

[1] Seeds with tolerances applicable to their prohibition.

(b) The tolerance applicable to the prohibition of the noxious weed seeds marked above with ([1]) shall be two seeds in the minimum amount required to be examined as shown in Table 1, § 201.46. If fewer than two seeds are found in an initial examination, the shipment from which the sample was drawn may be imported. If two seeds are found in an initial examination, a second sample must be examined. If two or fewer seeds are found in the second examination, the shipment from which the samples were drawn may be imported. If three or more seeds are found in the second examination, the shipment from which the samples were drawn may not be imported. If three or more seeds are found in an initial examination, the shipment from which the sample was drawn may not be imported.

Done in Washington, DC, this 15th day of March 1995.

Terry Medley,

Acting Administrator, Animal and Plant Health Inspection Service.

[FR Doc. 95–7133 Filed 3–22–95; 8:45 am]

BILLING CODE 3410–34–P

7 CFR Part 360

[Docket No. 94–050–1]

Noxious Weeds; Deletions and Additions to List

AGENCY: Animal and Plant Health Inspection Service, USDA.

ACTION: Proposed rule and notice of public hearing.

SUMMARY: We are proposing to amend the noxious weed regulations by removing *Stratiotes aloides* Linnaeus (water-aloe) from the list of aquatic weeds and *Euphorbia prunifolia* Jacquin (painted euphorbia) from the list of terrestrial weeds. We are also proposing to amend the noxious weed regulations by adding *Ottelia alismoides* (L.) Pers. to the list of aquatic weeds and *Solanum viarum* Dunal (tropical soda apple) to the list of terrestrial weeds. Listed noxious weeds may be moved into or through the United States only under a written permit and under conditions that would not involve a danger of dissemination of the weeds. This action appears to be necessary to prevent the artificial spread of noxious weeds into noninfested areas of the United States, and to remove unnecessary restrictions.

DATES: Consideration will be given only to comments received on or before April 24, 1995. We also will consider comments made at a public hearing to be held on April 4, 1995.

ADDRESSES: Please send an original and three copies of your comments to Docket No. 94–050–1, Regulatory Analysis and Development, PPD, APHIS, Suite 3C03, 4700 River Road Unit 118, Riverdale, MD 20727–1238. Please state that your comments refer to Docket No. 94–050–1. Comments received may be inspected at USDA, room 1141, South Building, 14th Street and Independence Avenue SW., Washington, DC, between 8 a.m. and 4:30 p.m., Monday through Friday, except holidays. Persons wishing to inspect comments are requested to call ahead on (202) 690–2817 to facilitate entry into the comment reading room. The public hearing will be held in room 3A01, 4700 River Road, Riverdale, MD 20737–1228.

FOR FURTHER INFORMATION CONTACT: Ms. Polly Lethonen, Botanist, Biological Assessment and Taxonomic Support, PPQ, APHIS, Suite 4A03, 4700 River Road Unit 113, Riverdale, MD 20737–1236, (301) 734–8896.

SUPPLEMENTARY INFORMATION:

Background

The noxious weed regulations (referred to below as the regulations) were promulgated under authority of the Federal Noxious Weed Act of 1974 (7 U.S.C. 2801 et seq., referred to below as the Act) and are set forth in 7 CFR part 360. They contain restrictions on the movement of listed noxious weeds into or through the United States, but do not affect the movement of listed noxious weeds that are moved solely intrastate.

A listed noxious weed may be moved into or through the United States only pursuant to a written permit. The regulations provide that APHIS will issue a written permit only after determining that the importation and movement of the noxious weed would not involve a danger of dissemination of the noxious weed in the United States.

Section 360.200 of the regulations lists these categories of noxious weeds: aquatic (§ 360.200(a)), parasitic (§ 360.200(b)), and terrestrial (§ 360.200(c)). This document proposes to delete *Stratiotes aloides* Linnaeus (water-aloe) from the list of aquatic weeds and *Euphorbia prunifolia* Jacquin (painted euphorbia) from the list of terrestrial weeds. This document also proposes to add *Ottelia alismoides* (L.) Pers. to the list of aquatic weeds and *Solanum viarum* Dunal (tropical soda apple) to the list of terrestrial weeds.

The Act (7 U.S.C. 2802(c)) defines a noxious weed as ''any living stage (including but not limited to, seeds and reproductive parts) of any parasitic or other plant of a kind, or subdivision of a kind, which is of foreign origin, is new to or not widely prevalent in the United States, and can directly or indirectly injure crops, other useful plants, livestock, or poultry or other interests of agriculture, including irrigation, or navigation or the fish or wildlife resources of the United States or the public health.''

First reported in Florida in 1988, *Solanum viarum* Dunal (tropical soda apple) has spread rapidly in Florida and appears to be a noxious weed, as defined in the Act. It is of foreign origin, not widely prevalent in the United States, and can directly or indirectly injure crops, other useful plants, livestock, or other interests of agriculture. Tropical soda apple poses a significant threat to the cattle industry, agricultural areas, and natural ecosystems of the southern United States. The Weed Science Society of America and the National Association of Exotic Plant Pest Councils support the listing of tropical soda apple under the Federal Noxious Weed Act, as does the pest risk assessment completed by the Animal and Plant Health Inspection

Service in April, 1994.[1] Listing this species will help avert further introductions and prevent the artificial spread of the weed into noninfested areas of the United States. Therefore, we are proposing to amend § 360.200(c) by adding Solanum viarum Dunal (tropical soda apple) to the list of terrestrial weeds under the noxious weed regulations.

The regulations also list *Stratiotes aloides* Linnaeus (water-aloe) as an aquatic noxious weed. This is an error. That species is not considered a noxious weed anywhere in its range. The correct listing should have been *Stratiotes alismoides* L. (duck-lettuce), which has been renamed as *Ottelia alismoides* (L.) Pers. We consider *Ottelia alismoides* (L.) Pers. to be a noxious weed because it is of foreign origin, is new to or not widely prevalent in the United States, and is directly or indirectly injurious to agricultural interests because it forms dense colonies along ditchbanks and irrigation canals that impede water flow. It is also a potentially serious weed of rice fields and slow moving or still bodies of water. Therefore, we are proposing to amend 7 CFR 360.200(a) by removing *Stratiotes aloides* Linnaeus (water-aloe) and adding *Ottelia alismoides (L.) Pers. to the list of aquatic weeds.*

Euphorbia prunifolia Jacquin (painted euphorbia), now listed in the regulations as a terrestrial weed, is considered to be synonymous with *Euphorbia heterophylla*,[2] a species native to North America, and widespread in the United States. Consequently, *Euphorbia prunifolia* Jacquin (painted euphorbia) no longer appears to meet the definition of a noxious weed under the Act. Therefore, we are proposing to amend § 360.200(c) by removing *Euphorbia prunifolia* Jacquin (painted euphorbia).

Public Hearing

APHIS will host a public hearing to provide interested persons a full opportunity to present their views regarding this proposal. At this public hearing, we will also consider comments on a proposed rule to amend the Federal Seed Act regulations. (See APHIS Docket No. 93–126–2, published in the Proposed Rule section of this issue of the **Federal Register**.) The hearing will be held on April 4, 1995, in room 3A01, 4700 River Road, Riverdale, MD 20737–1228.

A representative of APHIS will preside at the public hearing. Any interested person may appear and be heard in person, by attorney, or by other representative. Persons who wish to speak at the public hearing will be asked to sign in, listing their names and organizations.

The public hearing will begin at 9 a.m. local time and is scheduled to end at 12 p.m. local time. However, the hearing may be terminated at any time after it begins if all persons desiring to speak have been heard. We ask that anyone who reads a statement provide two copies to the presiding officer at the hearing. If the number of speakers at a hearing warrants it, the presiding officer may limit the time for each presentation so that everyone wishing to speak has the opportunity.

The purpose of the hearings is to give interested persons an opportunity for oral presentations of data, views, and arguments. Questions about the content of the proposed rules may be part of the commenters' oral presentations. However, neither the presiding officer nor any other representative of APHIS will respond to comments at a hearing, except to clarify or explain provisions of the proposed rules.

Executive Order 12866 and Regulatory Flexibility Act

This proposed rule has been reviewed under Executive Order 12866. For this action, the Office of Management and Budget has waived its review process required by Executive Order 12866.

In accordance with 5 U.S.C. 603, we have performed an Initial Regulatory Flexibility Analysis, set forth below, regarding the impact of this proposed rule on small entities. We do not currently have all the data necessary for a comprehensive analysis of the economic effects of this rule on small entities. Therefore, we are inviting comments concerning potential economic impacts. In particular, we are interested in determining the number and kinds of small entities that may incur benefits or costs from implementation of this proposed rule.

In accordance with 7 U.S.C. 2803 and 2809, the Secretary of Agriculture is authorized to promulgate regulations to prevent the movement of any noxious weed into the United States, or interstate, except under conditions prescribed by the Secretary.

This proposed rule would add *Solanum viarum* Dunal (tropical soda apple) to the list of terrestrial noxious weeds. The reduction in usable acreage caused by the spread of tropical soda apple poses a significant threat to the cattle industry and to other agricultural entities. Tropical soda apple also poses a threat to natural ecosystems. The weed is spreading into citrus groves, vegetable farms, sugarcane production areas, and dairy farms. Preventing further introductions and curtailing spread would have a positive economic impact on ranchers and growers not yet affected.

If this proposed rule is adopted, commodities offered for import found to be contaminated with propagules of tropical soda apple will have to be cleaned, treated, or reexported. This could have a negative economic impact on various importers. However, information regarding importations of commodities contaminated with tropical soda apple is not available, nor is the number of importers of such material. We expect that the economic impact on importers would be minimal as a result of this proposed rule change.

This proposed rule would also remove *Euphorbia prunifolia* Jacquin (painted Euphorbia) from the list of terrestrial noxious weeds, and would therefore remove restrictions on its importation and interstate movement. From 1985 through 1993, 207 shipments of articles intended for entry into the United States were found to contain *Euphorbia*, possibly *prunifolia*.

This proposed rule would also add *Ottelia alismoides* (L.) Pers. to the list of aquatic noxious weeds, and would remove *Stratiotes aloides* Linnaeus (water-aloe) from the list of aquatic noxious weeds. Data on the amount of *Ottelia alismoides* (L.) Pers., if any, currently being imported into the United States is unavailable. From 1985 through 1993, one shipment of articles intended for entry into the United States was found to contain water-aloe.

This proposed rule contains paperwork and recordkeeping requirements. A listed noxious weed may be moved into or through the United States only pursuant to a written permit. The regulations provide that APHIS will issue a written permit only after determining that the importation and movement of the noxious weed would not involve a danger of dissemination of the noxious weed in the United States.

Executive Order 12372

This program/activity is listed in the Catalog of Federal Domestic Assistance under No. 10.025 and is subject to Executive Order 12372, which requires intergovernmental consultation with State and local officials. (See 7 CFR part 3015, subpart V.)

[1] A copy of the pest risk assessment is available for inspection in the comment reading room (see **ADDRESSES**) or may be obtained from the individual listed under **FOR FURTHER INFORMATION CONTACT.**

[2] The Agriculture Research Service Germplasm Resource Information Network (GRIN) database, and other sources. For additional information, contact the individual listed under **FOR FURTHER INFORMATION CONTACT.**

Executive Order 12778

This proposed rule has been reviewed under Executive Order 12778, Civil Justice Reform. If this proposed rule is adopted: (1) All State and local laws and regulations that are inconsistent with this rule will be preempted; (2) no retroactive effect will be given to this rule; and (3) administrative proceedings will not be required before parties may file suit in court challenging this rule.

Paperwork Reduction Act

This proposed rule contains no information collection or recordkeeping requirements under the Paperwork Reduction Act of 1980 (44 U.S.C. 3501 *et seq.*).

List of Subjects in 7 CFR Part 360

Imports, Plants (Agriculture), Quarantine, Transportation, Weeds.

Accordingly, 7 CFR part 360 would be amended as follows:

PART 360—NOXIOUS WEED REGULATIONS

1. The authority citation for part 360 would continue to read as follows:

Authority: 7 U.S.C. 2803 and 2809; 7 CFR 2.17, 2.51, and 371.2(c).

§ 360.200 [Amended]

2. Section 360.200 would be amended as follows:

a. In paragraph (a), by removing ''*Stratiotes aloides* Linnaeus (water-aloe)''.

b. In paragraph (a), by adding ''*Ottelia alismoides* (L.) Pers.'' immediately after ''*Monochoria vaginalis* (Burman f.) C. Presl''.

c. In paragraph (c), by removing ''*Euphorbia prunifolia* Jacquin (painted euphorbia)''.

d. In paragraph (c), by adding ''*Solanum viarum* Dunal (tropical soda apple)'' immediately after ''*Solanum torvum* Swartz (turkeyberry)''.

Done in Washington, DC, this 15th day of March 1995.

Terry Medley,

Acting Administrator, Animal and Plant Health Inspection Service.

[FR Doc. 95–7135 Filed 3–22–95; 8:45 am]

BILLING CODE 3410–34–P

Agricultural Marketing Service

7 CFR Part 1050

[DA–95–14]

Milk in the Central Illinois Marketing Area; Proposed Suspension of Certain Provisions of the Order

AGENCY: Agricultural Marketing Service, USDA.

ACTION: Proposed suspension of rule.

SUMMARY: This document invites written comments on a proposal to suspend a portion of the producer milk definition of the Central Illinois Federal milk marketing order (Order 50) for an indefinite period commencing April 1, 1995. The proposed suspension was requested by Prairie Farms Dairy, Inc., which contends the action is necessary to prevent uneconomic and inefficient movements of milk and to ensure that producer milk historically associated with Order 50 will continue to be pooled under the order.

DATES: Comments are due no later than March 30, 1995.

ADDRESSES: Comments (two copies) should be filed with the USDA/AMS/Dairy Division, Order Formulation Branch, Room 2971, South Building, P.O. Box 96456, Washington, DC 20090–6456.

FOR FURTHER INFORMATION CONTACT: Nicholas Memoli, Marketing Specialist, USDA/AMS/Dairy Division, Order Formulation Branch, Room 2971, South Building, P.O. Box 96456, Washington, DC 20090–6456, (202) 690–1932.

SUPPLEMENTARY INFORMATION: The Regulatory Flexibility Act (5 U.S.C. 601–612) requires the Agency to examine the impact of a proposed rule on small entities. Pursuant to 5 U.S.C. 605(b), the Administrator of the Agricultural Marketing Service has certified that this proposed rule would not have a significant economic impact on a substantial number of small entities. This rule would lessen the regulatory impact of the order on certain milk handlers and would tend to ensure that dairy farmers would continue to have their milk priced under the order and thereby receive the benefits that accrue from such pricing.

The Department is issuing this proposed rule in conformance with Executive Order 12866.

This proposed rule has been reviewed under Executive Order 12778, Civil Justice Reform. This rule is not intended to have a retroactive effect. If adopted, this proposed rule will not preempt any state or local laws, regulations, or policies, unless they present an irreconcilable conflict with the rule.

The Agricultural Marketing Agreement Act of 1937, as amended (7 U.S.C. 601–674), provides that administrative proceedings must be exhausted before parties may file suit in court. Under section 608c(15)(A) of the Act, any handler subject to an order may file with the Secretary a petition stating that the order, any provisions of the order, or any obligation imposed in connection with the order is not in accordance with law and request a modification of an order or to be exempted from the order. A handler is afforded the opportunity for a hearing on the petition. After a hearing, the Secretary would rule on the petition. The Act provides that the district court of the United States in any district in which the handler is an inhabitant, or has its principal place of business, has jurisdiction in equity to review the Secretary's ruling on the petition, provided a bill in equity is filed not later than 20 days after the date of the entry of the ruling.

Notice is hereby given that, pursuant to the provisions of the Agricultural Marketing Agreement Act, the suspension of the following provision of the order regulating the handling of milk in the Central Illinois marketing area is being considered for an indefinite period, beginning April 1, 1995:

In § 1050.13(d)(2), the words ''not'' and ''it'' where they first appear.

All persons who want to submit written data, views or arguments about the proposed suspension should send two copies of their views to the USDA/AMS/Dairy Division, Order Formulation Branch, Room 2971, South Building, P.O. Box 96456, Washington, DC 20090–6456, by the 7th day after publication of this notice in the **Federal Register**. The period for filing comments is limited to 7 days because a longer period would not provide the time needed to complete the required procedures before the requested suspension is to be effective.

All written submissions made pursuant to this notice will be made available for public inspection in the Dairy Division during regular business hours (7 CFR 1.27(b)).

Statement of Consideration

The proposed rule would suspend a portion of the producer milk definition under the Central Illinois order for an indefinite period of time, beginning April 1, 1995. The proposed suspension would suspend the diversion limits applicable to individual producers for a pool distributing plant regulated under the order. The aggregate limit of 35 percent contained in the proviso of

§ 1050.13(d)(2) were suspended for an indefinite period on January 1, 1995.

The Central Illinois order currently allows an operator of a distributing plant to divert to a nonpool plant up to 50 percent of a producer's milk that is physically received at the pool plant during the months of August through April. The proposed suspension would allow a distributing plant to divert an unlimited amount of a producer's milk to a nonpool plant during each of these months, provided that at least one day's production is physically received at a pool plant.

Prairie Farms, which operates the only distributing plant regulated under Order 50, states that it represents over 90 percent of the producer milk pooled under Order 50. According to Prairie Farms, approximately 60 percent of its producer milk pooled under Order 50 was supplied to Beatrice Cheese, Inc., effective December 1, 1994. It contends the proposed suspension is necessary to permit it to keep its producers pooled under the order without the necessity of costly and inefficient movements of milk. It maintains that its proposal would not jeopardize the integrity of the order because at least one day's production would have to be physically received at a pool plant during each of the months of August through April to qualify the milk for diversion to a nonpool plant. Prairie Farms requests that the proposed action be handled on an emergency basis to allow the continuous pooling of producer milk historically associated with Order 50.

Accordingly, it may be appropriate to suspend the aforesaid provision for an indefinite period beginning April 1, 1995.

List of Subjects in 7 CFR Part 1050

Milk marketing orders.

The authority citation for 7 CFR part 1050 continues to read as follows:

Authority: Secs. 1–19, 48 Stat 31, as amended; 7 U.S.C. 601–674.

Dated: March 17, 1995

Lon Hatamiya,

Administrator.

[FR Doc. 95–7105 Filed 3–22–95; 8:45 am]

BILLING CODE 3410–02–P

DEPARTMENT OF LABOR

Occupational Safety and Health Administration

29 CFR Parts 1910, 1915, and 1926

[Docket No. H–049]

RIN 1218–0099

Respiratory Protection; Proposed Rule

AGENCY: Occupational Safety and Health Administration (OSHA), Labor.

ACTION: Extension of date for filing of testimony and evidence before the public hearing.

SUMMARY: By this document the Occupational Safety and Health Administration (OSHA) is extending the date for submitting the text of testimony and documentary evidence for those who intend to testify at the public hearings from April 14, 1995 to May 15, 1995, in order to provide additional time for the preparation of testimony for the hearings.

DATES: Testimony and evidence to be submitted at the hearings must be postmarked on or before May 15, 1995. Comments must be postmarked on or before April 14, 1995. The hearing will begin at 9:30 a.m., Tuesday, June 6, 1995 in Washington, DC.

ADDRESSES: Testimony and documentary evidence are to be submitted in quadruplicate to: Mr. Thomas Hall, OSHA Division of Consumer Affairs, Occupational Safety and Health Administration, 200 Constitution Avenue, N.W., Room N3649, Washington, D.C. 20210; (202) 219–8615. Testimony and documentary evidence will be available for inspection and copying in the Docket Office, Room N2625 at the above address.

Written comments should be submitted in quadruplicate or 1 original (hardcopy) and 1 disk (5¼ or 3 ½) in WordPerfect 5.0, 5.1, 6.0 or ASCII to: Docket Office, Docket H–49, U.S. Department of Labor, Occupational Safety and Health Administration, Room N2625, 200 Constitution Avenue, N.W. Washington, D.C. 20210; (202) 219–7894. Any information not contained on disk, e.g., studies, articles, etc., must be submitted in quadruplicate.

The hearing will be held in the auditorium of the U.S. Department of Labor, 200 Constitution Avenue, NW., Washington, DC.

FOR FURTHER INFORMATION CONTACT:

Proposal: Mr. Richard Liblong, Director, Office of Information and Consumer Affairs, Occupational Safety and Health Administration, 200 Constitution Avenue, N.W., Room N3647, Washington, D.C. 20210; (202) 219–8151.

Hearings: Mr. Thomas Hall, Division of Consumer Affairs, Occupational Safety and Health Administration, 200 Constitution Avenue NW., Room N3649, Washington, D.C. 20210; (202) 219–8615.

SUPPLEMENTARY INFORMATION:

Background

On November 15, 1994, OSHA published a notice of proposed rulemaking on its respiratory protection standard (59 FR 58884 *et seq.*). The proposal is intended to update the current respirator standard to reflect changes in methodology, technology, and approach related to respiratory protection that have occurred since the existing respiratory protection standard was adopted in 1971.

A notice of the extension of the comment period and the rescheduling of the public hearing was published on January 20, 1995 (60 FR 4132 *et seq.*). This notice extended the public comment period for the proposal to April 14, 1995. The date for submitting a notice of intention to appear at the hearing to testify was extended to March 31, 1995. The public hearings were rescheduled to start on June 6, 1995.

Extension of Date for Submitting Testimony and Evidence Before the Hearing

Pursuant to section 6(b)(3) of the OSH Act, an opportunity to submit oral testimony concerning all issues raised by the proposed standard will be provided at an informal public hearing to be held in Washington, DC from June 6, 1995 and continuing until Friday, June 23. The hearing will commence at 9:30 a.m. on June 6, 1995, in the auditorium of the Frances Perkins Building, U.S. Department of Labor, 3rd Street and Constitution Avenue NW., Washington, DC 20210.

All persons desiring to participate at the hearing must file in quadruplicate a notice of intention to appear, postmarked on or before March 31, 1995.

In addition to a notice of intention to appear, any party requesting more than ten (10) minutes for a presentation, or who will submit documentary evidence, must provide in quadruplicate the complete text of the testimony, including any documentary evidence to be presented. One copy shall not be stapled or bound and be suitable for copying. These materials must be provided to Mr. Thomas Hall, OSHA Division of Consumer Affairs at the

address above. By this document OSHA is extending the date for submitting the text of testimony and documentary evidence for those who intend to testify at the public hearings from April 14, 1995 to May 15, 1995, in order to provide additional time for the preparation of testimony for the hearings.

Any party who has not substantially complied with this requirement may be limited to a ten-minute presentation, and may be requested to return for questioning at a later time during the hearing.

Notices of intention to appear, testimony and evidence will be available for inspection and copying at the Docket Office at the address above.

Authority and Signature: This document was prepared under the direction of Joseph A. Dear, Assistant Secretary of Labor for Occupational Safety and Health, U.S. Department of Labor, 200 Constitution Avenue, NW., Washington, DC 20210. It is issued pursuant to section 6(b) of the Occupational Safety and Health Act of 1970 (84 Stat. 1593, 29 U.S.C. 655).

Signed at Washington, DC., this 20th day of March, 1995.

Joseph A. Dear,

Assistant Secretary of Labor.

[FR Doc. 95–7200 Filed 3–22–95; 8:45 am]

BILLING CODE 4510–26–P

ENVIRONMENTAL PROTECTION AGENCY

40 CFR Chapter I

[AD–FRL–5177–3]

RIN 2060–AE24

Consumer and Commercial Products: Schedule for Regulation

AGENCY: U.S. Environmental Protection Agency (EPA).

ACTION: Notice of the consumer and commercial product category list and schedule for regulation.

SUMMARY: This notice publishes a list of consumer and commercial products identified for possible regulation and a schedule for the promulgation of such regulations. Under section 183(e) of the Clean Air Act (CAA), the EPA is required to conduct a study of volatile organic compounds (VOC) emissions from the use of consumer and commercial products to assess their potential to contribute to violations of the national ambient air quality standard (NAAQS) for ozone, and to establish criteria for products subject to regulation under that section. Upon completion of the study, the EPA is required to submit a Report to Congress documenting the results of the study. Under section 183(e), the EPA is required to list and schedule for regulation those categories of products that the Administrator determines account for at least 80 percent of the total VOC emissions, on a reactivity-adjusted basis, from consumer and commercial products in areas classified as nonattainment for ozone. The consumer and commercial product list and schedule for regulation published in today's notice meets this obligation.

Although today's notice identifies consumer and commercial products that potentially could be regulated, this list and schedule may be amended as further information becomes available or is submitted to the EPA. The public will have an opportunity to comment on the listing and possible regulation of a particular product at the time the EPA proposes to regulate that particular product. Thus, today's action does not represent final agency action. Final agency action occurs upon publication of a final regulation for each product.

ADDRESSES: *Docket.* Docket No. A–94–65 contains information considered by the EPA in development of the consumer and commercial products study and subsequent schedule for regulation. In addition, the public may submit to the docket information or comments regarding today's notice and the Report to Congress. The docket is available for public inspection and photocopying between 8 a.m. and 5:30 p.m. Monday through Friday at the EPA's Air and Radiation Docket and Information Center (6102), room M–1500, Waterside Mall, 401 M Street, SW., Washington, DC 20460. The telephone number is (202) 260–7548 and the facsimile number is (202) 260–4400. A reasonable fee may be charged for copying docket materials.

Report to Congress. The Consumer and Commercial Product Report to Congress is available from Docket No. A–94–65 at the above address or from the Office of Air Quality Planning and Standards (OAQPS) Technology Transfer Network (TTN) which is a network of electronic bulletin boards operated by the EPA. The service is free, except for the cost of the telephone call. The modem telephone number is (919) 541–5742. The modem provides up to a 14,400 baud connection. If more information on the TTN is needed, call the HELP line at (919) 541–5384.

FOR FURTHER INFORMATION CONTACT: For information concerning the Report to Congress and schedule for regulation, contact Mr. Bruce Moore, Coatings and Consumer Products Group, Emission Standards Division (MD–13), U.S. Environmental Protection Agency, Research Triangle Park, North Carolina 27711, telephone number (919) 541–5460.

SUPPLEMENTARY INFORMATION:

I. Background

This notice describes the EPA's initial efforts to respond to requirements of Section 183(e) of the CAA and to a court order. These efforts also respond to concerns expressed by representatives of State and local air pollution control agencies and by consumer products industry representatives. The persistence of the ground-level ozone problem has caused State and local air pollution agencies to seek emission reductions beyond those which have been obtained through regulation of the conventional mobile and stationary sources of emissions. As a result, several agencies are adopting rules to regulate various household consumer products. Representatives of the consumer products industry have expressed concern that differences in State and local requirements for consumer products could disrupt the national distribution network for consumer products and has urged the EPA to issue rules for consumer products to provide consistency across the country. States who need emission reductions are also supportive of an EPA rulemaking which will assist them in their efforts toward achievement of ozone attainment.

In response to these concerns, the EPA consulted with consumer product manufacturers and other interested parties to determine which products would be the most amenable to an expedited regulation that could achieve significant VOC emission reductions without significant effects on consumer satisfaction or price of the products. Industry representatives identified a group of consumer products that meet these criteria and proposed to EPA emission requirements for them that have already been achieved in California (see Section III.C). High quality products meeting these standards are being sold in California with no significant effect on consumer prices. The EPA plans to propose the rule covering these products as part of the first group of categories listed for regulation.

The relevant statutory provision is contained in Section 183(e) of the CAA. Through this provision, Congress required the EPA to conduct a study of emissions of VOC into the ambient air from consumer and commercial products. The term ''consumer and

commercial products'' is defined to mean:

> * * * any substance, product (including paints, coatings, and solvents), or article (including any containers or packaging) held by any person, the use, consumption, storage, disposal, destruction, or decomposition of which may result in the release of volatile organic compounds * * *

The statutory definition of consumer and commercial products includes a much broader array of products than those usually considered to be consumer products (e.g., personal care products, household cleaning products, or household pesticides). The statutory definition of consumer and commercial products encompasses all VOC-emitting products used in the home, by businesses, by institutions, and in a wide range of industrial manufacturing operations.

The stated objectives of the study are (1) to determine the potential of VOC emissions into the ambient air from consumer and commercial products to contribute to ozone levels which violate the NAAQS for ozone; and (2) to establish criteria for regulating consumer and commercial products.

Upon completion of the study, the EPA is required to submit a Report to Congress that documents the results of the study. The study and Report to Congress required under Section 183(e) are described in section II of this notice.

In establishing criteria for regulating products, the Administrator is directed to consider the following: the uses, benefits, and commercial demand of products; the health or safety functions served by such products; whether products emit highly reactive VOC into the ambient air; the cost-effectiveness of controls; and the availability of alternatives which are of comparable costs, considering health, safety, and environmental impacts. The development and application of criteria, and the resultant ranking of products based on these and other considerations, are described in sections III.B and III.C of this notice.

Upon completion of the study and submission of the Report to Congress, the EPA is required to list those categories of products that are determined, based on the study, to account for at least 80 percent of the total VOC emissions, on a reactivity-adjusted basis, from consumer and commercial products in areas that violate the NAAQS for ozone. The EPA is required to divide the list into four groups establishing priority for regulation. Every 2 years following publication of the list, the EPA is required to regulate one group until all four groups are regulated. The consumer and commercial product list and schedule for regulation is presented in section III.C of this notice.

As noted earlier, the EPA is presenting this list and schedule at this time as required by the CAA and court order. However, the EPA may amend the schedule and the products listed in particular groups as further information becomes available. For example, as one of the considerations specifically noted by Congress in section 183(e)(2)(B)(iv), cost-effectiveness of control is an important factor, and one for which the EPA had relatively limited information. In moving forward to develop specific regulations, the EPA will evaluate new information on cost-effectiveness as well as the other criteria and may, in the process, reassess the product listing and schedule.

II. Study and Report to Congress

A. Intent and Structure

The primary intent of the study and Report to Congress is to meet the objectives of section 183(e) of the CAA which requires EPA to inform members of Congress, and other interested parties, of relevant issues surrounding VOC emissions from the use, consumption, storage, disposal, destruction, or decomposition of consumer and commercial products. The study examines the potential of VOC emissions from consumer and commercial products to contribute to ozone nonattainment; documents the development of a reliable and comprehensive emissions inventory; identifies and evaluates opportunities for achieving emission reductions; examines the fate of consumer and commercial product-related VOC in wastewater and in landfills; evaluates the use of various systems of regulation, including economic incentives; and provides supporting rationale for the establishment of criteria for prioritizing products for regulation.

The study is composed of six volumes, including:

(1) Report to Congress (EPA–453/R–94–066–a)

(2) Comprehensive Emissions Inventory (EPA–453/R–94–066–b)

(3) Fate of Consumer Product VOC in Landfills (EPA–453/R–94–066–c)

(4) Fate of Consumer Product VOC in Wastewater (EPA–453/R–94–066–d)

(5) Economic Incentives to Reduce VOC Emissions from Consumer and Commercial Products (EPA–453/R–94–066–e)

(6) Aerosol Products and Packaging Systems (EPA–453/R–94–066–f)

B. Findings of the Consumer and Commercial Products Study

The Report to Congress highlights the following key findings of the study:

1. The scope of consumer and commercial products subject to section 183(e) is very broad and includes not only household consumer products but many products used commercially and in industrial manufacturing operations. This vast universe of products ranges from underarm antiperspirants and deodorants to coatings used in the manufacture of automobiles.

2. Consumer and commercial products, while individually small sources of VOC emissions, contribute significantly to the ozone nonattainment problem. In 1990, consumer and commercial products emitted approximately 6 million tons of VOC nationwide, or about 28 percent of all man-made VOC.

3. Opportunities exist for VOC emission reductions from consumer and commercial products through product reformulation, substitution, repackaging, and other control measures. With regard to consumer products, California and other States have issued regulations which limit the VOC content of approximately two dozen categories of products. These regulations were developed over several years with extensive interaction with the consumer products industry. The EPA has estimated that the VOC content limitations imposed by the State regulations, if applied nationwide, may result in an overall VOC reduction of approximately 25 percent from the 1990 baseline for those categories.

4. In developing control measures for consumer products, emission reductions must be balanced with product efficacy, consumer acceptance, and economic impacts.

5. A number of systems can be employed to implement the various control measures available under Section 183(e). These include product registration, labeling, self-monitoring, reporting, prohibitions, limitations, and economic incentives.

6. Under section 183(e)(3)(C), the EPA may issue control techniques guidelines (CTG) in lieu of regulations where the Administrator determines that the CTG will be substantially as effective in reducing VOC emissions in nonattainment areas. In many cases, CTG can be effective regulatory approaches to reduce emissions of VOC in nonattainment areas—with the advantage of not imposing control costs on attainment areas. For example, in the case of small volume consumer products that are widely used (e.g.,

personal care products), a CTG might not be effective at reducing VOC emissions because of difficulties in enforcement. However, for other cases (and for a potentially large share of nonattainment area VOC emission sources), enforcement and compliance may be effectively focused at the source of the VOC emissions, be it the point of manufacture, the point of end-use, or both. For example, VOC emissions from commercial products used in industrial settings could be controlled effectively with a CTG that targeted emissions at the point of end-use, as the population of end-users is likely to be readily identifiable.

7. Economic incentive programs appear to be viable alternatives to traditional strategies to reduce VOC emissions from consumer and commercial products. Certainty of emission reductions, minimization of control and/or implementation costs, technological innovation, and flexibility afforded by the program are all objectives which should be considered in selecting a strategy. The best regulatory approach for consumer and commercial products depends upon the particular universe of products being regulated and the priority of objectives.

8. Ideally, ozone control strategies should be based not only on mass VOC and NO_X emissions but also on the relative photochemical reactivity of individual species, the VOC-to-NO_X ratios prevalent in specific airsheds, and other factors which could work together to minimize the formation of ozone with minimum adverse impacts. However, reactivity data on VOC, especially those compounds used to formulate consumer and commercial products, are extremely limited. Better data, which can be obtained only at great expense, are needed if the EPA is to consider relative photochemical reactivity in development of regulations. In the meantime, a practical approach is to make regulatory determinations on the basis of mass VOC emissions.

The EPA considered reactivity to a limited extent, however, in prioritizing consumer and commercial product categories for regulation. In an effort to meet the requirements of section 183(e), and being aware of the limitations and uncertainties surrounding the reactivity issue, the EPA employed available information on reactivity to (1) consider those products which emit ''highly-reactive'' compounds; and (2) adjust mass VOC emission estimates to account for relative reactivity of product ingredients. The EPA's methodology for this limited application of reactivity is discussed in detail in the Report to Congress.

9. A widely held misconception is that most aerosol products employ chlorofluorocarbons (CFC) as propellants and contribute to stratospheric ozone depletion. In 1978, the EPA banned the use of CFC in virtually all aerosol products, the exceptions being medical products, military specification products, and aviation products. Hydrocarbons (propane, butane, and isobutane), which are VOC, are currently the predominant propellant compounds. Aerosol products function as systems composed of the product, the propellant, the valve, and the container. Hydrocarbon propellants not only expel the product from the container but serve as diluents in the product formulation.

III. Consumer and Commercial Product Schedule for Regulation

A. Criteria for Regulating Products Under Section 183(e)

Although the EPA has discretion to determine which products are considered to account for 80 percent of VOC emissions, as a preliminary step, the EPA relied on numerical rankings to ensure that the highest priority products would be regulated. Section 183(e)(2)(B) of the CAA instructs the EPA to develop criteria for prioritizing consumer and commercial products for regulation. In establishing these criteria, the EPA is required to consider the following factors:

(1) Uses, benefits, and commercial demand,

(2) Health and safety functions,

(3) Products which emit highly reactive VOC,

(4) Cost-effectiveness of control, and

(5) Availability of alternatives.

The following eight criteria for ranking consumer and commercial products were developed:

(1) Utility,

(2) Commercial demand,

(3) Health and safety functions,

(4) Emissions of highly reactive VOC,

(5) Availability of alternatives,

(6) Cost-effectiveness of controls,

(7) Magnitude of annual VOC emissions, and

(8) Regulatory efficiency and program considerations.

Criterion 1 (Utility) considers uses and benefits, and commercial demand is addressed by Criterion 2. The remaining four factors are addressed individually by Criteria 3 through 6. Criteria 7 and 8 (magnitude of emissions and regulatory efficiency) reflect additional considerations not specifically prescribed in the CAA. The EPA has exercised its discretion to include these criteria, as the EPA believes they are important in prioritizing product categories for regulation. The EPA's interpretation of each of the five factors and the rationale and intent of each of the eight criteria are discussed in detail in the Report to Congress.

B. Preliminary Ranking of Product Categories

Criteria 1 through 7 were developed such that each product category could be evaluated numerically by assigning a score of 1 to 5 for each of the criteria, with a higher score indicating a higher priority for regulation.

The preliminary ranking was based on numerical scoring of criteria 1 through 7 for each product category. This process involved objective and subjective considerations. Criteria 2, 4, 6, and 7 are objective in nature and could be scored quantitatively based on annual sales, VOC emissions, and cost of control. Exercise of Criteria 1, 3, and 5 may include some subjective considerations. Scoring of these criteria could be affected by one's background, knowledge of the category, or other factors. In order to ensure consistency and fairness, an independent panel was convened to assist the EPA in application of these criteria.

The National Air Pollution Control Techniques Advisory Committee (NAPCTAC), established in 1968 by the Surgeon General, is an advisory group which has provided, and continues to provide, the EPA with independent views on EPA actions related to the air program. The NAPCTAC consists of the Director, Office of Air Quality Planning and Standards, or his designee, as chairperson and 11 members appointed by the EPA's Deputy Administrator. Members are selected from industry, State and local agencies, public interest groups, and academia.

Because of the balance afforded by the diversity of such a group, the NAPCTAC was considered a convenient choice for the panel. Accordingly, the panel was convened in July 1994 in Durham, North Carolina, for the purpose of assigning preliminary scores for Criteria 1 through 7 to each of the product categories. Results of the preliminary scoring exercise are available in the docket.

C. Application of Criterion Eight: Regulatory Efficiency and Program Considerations

Once the initial ranking of products based on exercise of Criteria 1 through 7 was completed, the EPA exercised Criterion 8, regulatory efficiency and program considerations, to identify which products should be considered to account for 80 percent of VOC

emissions and prioritized in the schedule for regulation.

As required by section 183(e), the EPA grouped the listed categories of consumer and commercial products into four groups, one of which will be regulated every 2 years. Although the statute does not require that the 80 percent be divided into four equal groups, the EPA placed product categories into the four groups listed in Table 1 as equally as possible for purposes of workload management. The EPA also attempted to reduce emissions as early as possible, given these workload considerations. Nearly two-thirds of the emissions from consumer and commercial products are addressed by the first two groups of categories.

TABLE 1.—CONSUMER AND COMMERCIAL PRODUCTS SCHEDULE FOR REGULATIONS

	Schedule for regulation	Emissions Mg/yr
Group I:		
Consumer products (24 categories)[a]	1997	301,347
Shipbuilding and repair coatings	1997	23,302
Aerospace coatings	1997	165,892
Architectural coatings	1997	362,454
Autobody refinishing coatings	1997	85,509
Aerosol spray paints	1997	58,521
Wood furniture coatings	1997	88,109
		1,085,134
Group II:		
Lithographic printing materials	1999	545,454
Industrial cleaning solvents	1999	232,890
Flexible package printing materials	1999	136,364
Flat wood paneling coatings	1999	19,618
		934,326
Group III:		
Miscellaneous metal products coatings	2001	198,545
Large appliance coatings	2001	22,994
Fiberglass boat manufacturing materials	2001	11,000
Miscellaneous industrial adhesives	2001	185,175
		417,714
Group IV:		
Paper, film, and foil coatings	2003	92,064
Letterpress printing materials	2003	25,636
Plastic parts coatings	2003	20,000
Metal furniture coatings	2003	97,220
Auto and light truck assembly coatings	2003	68,182
Petroleum drycleaning solvents	2003	49,091
		352,193
Emissions addressed by schedule		2,789,367
Percentage of total (3,481,804 Mg/yr)		80.1

[a] Product categories included in ''Consumer products (24 categories)'' grouping:
Aerosol cooking sprays
Air fresheners
Auto windshield washer fluids
Bathroom and tile cleaners
Carburetor and choke cleaners
Charcoal lighter materials
Dusting aids
Engine degreasers
Fabric protectants
Floor waxes and polishes
Furniture maintenance products
General purpose cleaners
Glass cleaners
Hair sprays
Hair mousses
Hair styling gels
Household adhesives
Nonagricultural insecticides
Laundry prewash treatments
Laundry starch products
Nail polish removers
Oven cleaners
Shaving creams
Underarm antiperspirants and deodorants

Group I includes product categories some of which have regulatory activities (rules or guidelines) already underway. The remaining categories are divided among Groups II, III, and IV according to numerical rank. ''Consumer products (24 categories)'' represent an aggregation of two dozen individual household, personal care, and automotive products which are currently regulated in one or more States. They are products used in home, office, institutional, or similar settings. In order to achieve VOC reductions required under their State Implementation Plan (SIP), many States have declared intentions to develop rules to reduce VOC emissions from these particular categories as part of their attainment plans. The EPA has scheduled these categories for regulation as part of Group I.

With one exception, all the other categories in Group I received relatively high numerical scores in the preliminary ranking. The one exception is shipbuilding and repair coatings, which are included in Group I despite a lower numerical score because a CTG for this category is currently under development pursuant to section 183(a) of the CAA. Under section 183(e)(3)(C), the Administrator may issue CTG in lieu of regulations if it is determined that a CTG will be substantially as effective in reducing VOC emissions. As a CTG is developed, the EPA will assess the projected emission reductions to make this determination. The EPA believes that the issuance of a CTG for shipbuilding and repair coatings to satisfy the requirements of both sections 183(a) and 183(e) would promote regulatory efficiency. Two other categories in Group I for which CTG are being developed are aerospace coatings and wood furniture coatings. As with the shipbuilding and repair coatings CTG, determinations will be made as to whether these CTG satisfy the requirements of section 183(e)(3)(c).

While the regulatory schedule presented in today's notice includes product categories that account for 80 percent of VOC emissions in nonattainment areas, as directed in the CAA, the EPA recognizes that the list of product categories included may need to be amended as regulatory development proceeds or as new information becomes available.

As individual products and categories are further assessed and comments are submitted during the rulemaking process, the EPA's evaluation of the criteria as applied to each category may change. For example, Criterion 6, cost-effectiveness of controls, reflects the emphasis Congress placed on identifying ''(t)hose consumer and commercial products which are subject to the most cost-effective controls.'' (Section 183(e)(2)(B)(iv)). However, the EPA had relatively limited data on the cost-effectiveness of control for most products. As the EPA moves forward in implementing the emission limitations required by section 183(e), it will reevaluate and reassess the ranking and schedule for regulation based on additional information developed on cost-effectiveness.

As a result, categories may be removed from the list, and remaining unlisted categories may be considered for listing. Table 2 shows significant categories within the scope of section 183(e) which are not being listed at this time for regulation. Any changes made to the consumer and commercial products regulatory schedule will be published in the **Federal Register**.

TABLE 2.—SIGNIFICANT CATEGORIES OUTSIDE 80 PERCENT

	Baseline emissions (Mg/yr)
Agricultural pesticides	25,050
Rotogravure publication printing materials	18,182
Nonautomotive paint thinners	9,055
Cutback asphalt paving materials	116,727
Synthetic fiber spinning solvents	42,000
Metal cleaning (degreasing) solvents	32,727
Fabric printing, coating, and dyeing materials	42,000
Metal can coatings	40,909
Tire manufacturing cements	24,000
Magnetic tape coatings	5,000
Metal coil coatings	19,636
Roofing materials	16,840
Magnet wire coatings	7,407
Mold release agents	68,545
Remaining consumer products	154,714

IV. Administrative Requirements

A. Docket

The docket is an organized file of information considered by the EPA in the development of an action. Although this action is not a rulemaking, a docket has been established for the consumer and commercial product study and subsequent product category list and schedule for regulation. The docket number is A–94–65. The purpose of this docket is to allow interested parties a means to access relevant documents not otherwise available. In addition, the public may submit to the docket information or comments regarding today's notice and the Report to Congress. The docket may be inspected at the EPA's Air and Radiation Docket and Information Center, listed in the **ADDRESSES** section of this notice.

B. Regulatory Requirements

1. General

Because today's notice is not a rulemaking, the EPA has not prepared an assessment of the potential costs and benefits pursuant to Executive Order 12866, nor an economic impact analysis pursuant to section 317, nor a regulatory flexibility analysis pursuant to the Regulatory Flexibility Act (Pub. L. 96–354, September 19, 1980). Also, this notice is not subject to the Paperwork Reduction Act of 1990, 44 U.S.C. 3501 *et seq.*

2. Executive Order and Office of Management and Budget Review

Under Executive Order 12866 (58 FR 51735, October 4, 1993), the EPA must determine whether regulatory actions are significant and therefore subject to Office of Management and Budget (OMB) review and the requirements of the Executive Order. The Order defines ''significant regulatory action'' as one that is likely to lead to a rule that may:

(1) Have an annual effect on the economy of $100 million or more, or adversely and materially affect a sector of the economy, productivity, competition, jobs, the environment, public health or safety, or State, local, or tribal governments or communities;

(2) Create a serious inconsistency or otherwise interfere with an action taken or planned by another agency;

(3) Materially alter the budgetary impact of entitlements, grants, user fees, or loan programs, or the rights and obligation of recipients thereof; or

(4) Raise novel legal or policy issues arising out of legal mandates, the President's priorities or the principles set forth in the Executive Order.

Pursuant to the terms of the Executive Order, OMB has notified the EPA that it considers this a ''significant regulatory action'' within the meaning of the Executive Order because it is likely to lead to rules which may meet one or more of the criteria. The EPA has submitted this action to OMB for review. Changes made in response to OMB suggestions or recommendations will be documented in the public record.

Dated: March 15, 1995.

Carol M. Browner,

Administrator.

[FR Doc. 95–7198 Filed 3–22–95; 8:45 am]

BILLING CODE 6560–50–P

40 CFR Part 52

[FRL–5175–4]

Transportation Conformity; Proposed Approval of Petition for Exemption From Nitrogen Oxides Provisions, Colorado

AGENCY: Environmental Protection Agency.

ACTION: Proposed rule.

SUMMARY: The Environmental Protection Agency (EPA) is proposing to approve a petition that was submitted pursuant to section 182(f) of the Clean Air Act (as amended in 1990) (CAA) by the Denver Regional Council of Governments (DRCOG) requesting that the Denver metropolitan area, an ozone nonattainment area classified as transitional, be exempted from the requirements regarding the control of oxides of nitrogen (NO_X) imposed by the Federal conformity rules. These rules waive certain NO_X requirements if an exemption under section 182(f) is granted by EPA. The EPA has indicated in relevant guidance that areas (including transitional areas, like the Denver Metropolitan area) demonstrating attainment based on ambient air quality monitoring data without additional NO_X reductions satisfy the exemption test.

DATES: Comments must be received on or before April 24, 1995.

ADDRESSES: Written comments should be addressed to: Douglas M. Skie, Chief, Air Quality Branch (8ART-AP), United States Environmental Protection Agency, Region VIII, 999 18th Street, suite 500, Denver, Colorado 80202–2466.

Copies of the DRCOG petition and other information relevant to this action are available for inspection between 8 a.m. and 4 p.m. Monday through Friday at the following locations: United States Environmental Protection Agency, Region VIII, Air Quality Branch (8ART-AP), 999 18th Street, suite 500, Denver, Colorado 80202–2466.

Air and Radiation Docket and Information Center, United States Environmental Protection Agency, 401 M. Street SW., Washington, DC 20460

Anyone wishing to review this petition at the Denver EPA Regional office is asked to contact the person below to schedule an appointment 24 hours in advance.

FOR FURTHER INFORMATION CONTACT: Ms. Aundrey C. Wilkins, SIP Section (8ART-AP), Air Programs Branch, United States Environmental Protection Agency, Region VIII, 999 18th Street, Suite 500, Denver, Colorado, 80202–2466, telephone (303) 294–1379.

SUPPLEMENTARY INFORMATION:

I. Background

Section 182(f) of the Clean Air Act contains requirements for major stationary NO_X sources in marginal and above ozone nonattainment areas and in an ozone transport region. Section 182(f) also specifies circumstances under which the NO_X requirements would be limited or would not apply.

Under section 182(f)(1)(A), an exemption from the NO_X requirements may be granted for nonattainment areas outside an ozone transport region if EPA determines that ''additional reductions of NO_X would not contribute to attainment'' of the ozone NAAQS in those areas. EPA has indicated that in cases where a nonattainment area is demonstrating attainment with 3 consecutive years of air quality monitoring data, without having implemented the section 182(f) NO_X provisions, it is clear that this test is met since ''additional reductions of NO_X would not contribute to attainment'' of the NAAQS in that area.

EPA's general and transportation conformity rules reference the section 182(f) exemption process as a means for exempting affected areas from certain NO_X conformity requirements. See 58 FR 62197, November 24, 1993, Transportation Conformity, and 58 FR 63240, November 30, 1993, General Conformity.

This interpretation is discussed in a May 27, 1994 memorandum from John S. Seitz, Director, Office of Air Quality Planning and Standards (OAQPS), entitled ''Section 182(f) Nitrogen Oxides (NO_X) Exemptions—Revised Process and Criteria.'' This memorandum revised relevant portions of previously-issued OAQPS guidance dated December, 1993, entitled ''Guideline for Determining the Applicability of Nitrogen Oxide Requirements under Section 182(f).'' Both documents address EPA's policy regarding NO_X exemptions for areas outside an ozone transport region that have air quality monitoring data showing attainment. The section 182(f) NO_X provisions and the guidance cited above apply to marginal and above ozone nonattainment areas, but not nonclassifiable ozone nonattainment areas (i.e., submarginal, transitional, and incomplete/no data). However, on June 17, 1994, EPA published a document entitled ''Conformity; General Preamble for Exemption from Nitrogen Oxides Provisions'' (59 FR 31238) (''General Preamble''). This document provides guidance on the exemption of nonclassifiable ozone nonattainment areas, outside an ozone transport region, from the conformity rule's NO_X provisions based on air quality monitoring data showing attainment. As a transitional ozone nonattainment area, the Denver metropolitan area falls within the ''nonclassifiable'' category.

Pursuant to section 182(f), a person or State may petition EPA to grant an exemption which would relieve the relevant nonattainment area from certain requirements of the general and transportation conformity rule. DRCOG submitted a NO_X exemption petition on May 25, 1994 and submitted supporting documentation via a letter dated August 1, 1994. Ambient air quality data provided with the DRCOG petition showed no violations of the ozone NAAQS during the three-year period from 1991 through 1993. Further, the Colorado Air Pollution Control Division (APCD) provided additional air quality data for the same time period supporting DRCOG's position that there were no violations.

II. Analysis of the DRCOG Petition for a NO_X Exemption

EPA believes that DRCOG has demonstrated that the Denver metropolitan area qualifies for an exemption from the NO_X conformity requirements based on the ambient data provided by DRCOG and APCD for 1991, 1992, and 1993. The AIRS data show no violations of ozone NAAQS during these three years.

The APCD has endorsed the DRCOG petition in a letter dated December 15, 1994, from Tom Getz, Director, APCD, to Mr. William Yellowtail, the EPA Region VIII Regional Administrator.

III. Analysis of Other Ozone Network Issues

EPA considered the condition of the ozone ambient air monitoring network as part of evaluating the DRCOG NO_X exemption request. In 1989, EPA called attention to suspected deficiencies in the ozone ambient air monitoring network. EPA and the APCD have continued to address these concerns over the years. The APCD conducted studies of the ozone network in 1991 and 1992. A 1993 study report noted that the network was not measuring at maximum concentrations. The APCD found that the maximum concentration area covered the northwest and southwest parts of the ozone nonattainment area. The state is required to designate at least one site, but should include as many as are necessary, to adequately monitor the maximum concentration area. (40 CFR Part 58).

In 1993, it was determined that higher values appeared in the northwest part of

the maximum concentration area rather than in the southwest. Priority was given to placing new sites in the northwest.

In 1993, APCD added two new sites in the northwest—Enrel and South Boulder Creek. No violations were recorded at these two sites in 1993. However, data in AIRS show one exceedance at the South Boulder Creek site in 1993. Three exceedances must occur for there to be a violation.

These two new sites were retained and studied in 1994. The APCD has reported that no violations or exceedances occurred at either of these sites in 1994.

There are nine sites currently on the Denver ozone ambient air monitoring network, including the two new sites. The Enrel and South Boulder Creek sites continue to record higher values than other sites on the network. The one exceedance at the South Boulder Creek site in 1993 and the continued higher value readings at the same site and at the Enrel site confirm study findings that these sites are within the maximum concentration area and should remain in place.

Modifying the network to ensure monitoring of maximum concentrations is an EPA priority and is required by 40 CFR part 58. The EPA is working with APCD to ensure that at least one monitoring site is established in the southwest area in 1995. In addition, the APCD plans to conduct further study in this southwest area during the 1995 summer ozone season to more accurately identify where sites should be placed.

Although there have been concerns with the monitoring network, EPA believes that many of the concerns have been corrected and that any remaining concerns are not significant enough to deny the NO_X waiver. As indicated above, no violations have been recorded by the network, even since installation of the Enrel and South Boulder Creek sites in 1993. In addition, the NO_X waiver policy published in the General Preamble provides further protection by providing for granting a NO_X exemption on a contingent basis as described in section IV of this **Federal Register** document. This allows EPA to revoke the exemption if violations are recorded at any monitoring sites.

IV. Approval of the NO_X Exemption on a Contingent Basis

According to the General Preamble, approval of an exemption based solely on ambient air quality monitoring data shall be granted on a contingent basis, i.e., the exemptions will last for only as long as the area's monitoring data continue to demonstrate attainment. If EPA subsequently determines that the area has violated the ozone standard, the exemption, as of the date of the determination, will no longer apply. If a violation of the ozone NAAQS is monitored in the Denver Metropolitan Area, EPA will provide notice in the **Federal Register**. Existing transportation plans and TIPs and past conformity determinations will not be affected by a determination that the NO_X exemption no longer applies, but new conformity determinations would have to observe the NO_X requirements of the conformity rule. The State must continue to operate an appropriate ambient air quality monitoring network, in accordance with 40 CFR Part 58, to verify the attainment status of the area. The air quality data relied on for the above determination must be consistent with 40 CFR part 58 requirements and other relevant EPA guidance, and recorded in EPA's AIRS national database.

The EPA NO_X exemption guidelines, published in the General Preamble, do not require that a redesignation request be submitted with a request for a NO_X transportation conformity exemption. Conditional exemptions from the transportation conformity NO_X requirements do not substitute for the redesignation process.

The General Preamble stated that for areas which are relying on monitoring data for the exemption request, the notice proposing approval of the exemption request should provide opportunity for comment on the preliminary interpretations contained in the General Preamble. It should also offer opportunity for comment on the appropriateness of using monitoring data which are consistent with the requirements in 40 CFR part 58 and are recorded in AIRS as the basis of EPA's approval and rescission of the contingent NO_X exemption. Accordingly, EPA requests comments regarding these matters.

V. Impacts of Granting a NO_X Waiver for Denver Metropolitan Area

In ozone nonattainment areas classified as transitional, such as the Denver metropolitan area, the effect of a NO_X exemption is limited solely to the issue of whether such areas may be exempted from meeting the applicable NO_X requirements of the transportation and general conformity rule.

EPA also stated in the General Preamble that it plans to amend the transportation conformity rule to require that once an area's maintenance plan is approved, any previously approved NO_X conformity exemption no longer applies. The area must then demonstrate as part of its conformity determinations that the transportation plan and TIP are consistent with the motor vehicle emissions budgets for NO_X where such a budget is established by the maintenance plan. As currently written, none of the transportation conformity rule's NO_X requirements would ever apply to an area once such an area had received a NO_X transportation conformity exemption.

Regulatory Flexibility

Under the Regulatory Flexibility Act, 5 U.S.C. 600 *et seq.*, EPA must prepare a regulatory flexibility analysis assessing the impact of any proposed or final rule on small entities. (5 U.S.C. 603 and 604). Alternatively, EPA may certify that the rule will not have a significant impact on a substantial number of small entities. Small entities include small businesses, small not-for-profit enterprises, and government entities with jurisdiction over populations of less than 50,000.

This proposal does not create any new requirements. Therefore, I certify that it does not have significant impact on any small entities affected. Moreover, due to the nature of the federal-state relationship under the CAA, preparation of a regulatory flexibility analysis would constitute federal inquiry into the economic reasonableness of state action.

The OMB has exempted these actions from review under Executive Order 12866.

Interested parties are invited to comment on all aspects of this proposed action.

List of Subjects in 40 CFR Part 52

Environmental protection, Air pollution control, Carbon Monoxide, Hydrocarbons, Intergovernmental relations, Lead, Nitrogen dioxide, Ozone, Particulate matter, Reporting and recordkeeping requirements, Volatile organic compounds.

Authority: 42 U.S.C. 7401–7671q.

Dated: March 10, 1995.

William P. Yellowtail,

Regional Administrator.

[FR Doc. 95–6926 Filed 3–22–95; 8:45 am]

BILLING CODE 6560–50–P

---

40 CFR Part 52

[OH45–1–5974b; FRL 5169–3]

Approval and Promulgation of Implementation Plans; Ohio

AGENCY: United States Environmental Protection Agency (USEPA).

ACTION: Proposed rule.

SUMMARY: The USEPA proposes to approve the State Implementation Plan (SIP) revision request submitted by the State of Ohio for the purpose of satisfying Clean Air Act requirements. In the final rules section of this **Federal Register**, the USEPA is approving the State's SIP revision request as a direct final rule without prior proposal, because the USEPA views this as a noncontroversial revision amendment and anticipates no adverse comments. A detailed rationale for the action is set forth in the direct final rule. If no adverse comments are received in response to that direct final rule, no further activity is contemplated in relation to this proposed rule. If the USEPA receives adverse comments, the direct final rule will be withdrawn, and all public comments received will be addressed in a subsequent final rule based on this proposed rule. The USEPA will not institute a second comment period on this notice. Any parties interested in commenting on this notice should do so at this time.

DATES: Comments must be received on or before April 24, 1995.

ADDRESSES: Written comments should be mailed to: William L. MacDowell, Chief, Regulation Development Section, Air Enforcement Branch (AE–17J), United States Environmental Protection Agency, Region 5, 77 West Jackson Boulevard, Chicago, Illinois 60604.

Copies of the State submittal and the USEPA's analysis of it are available for public inspection during normal business hours at: (It is recommended that you telephone Bonnie Bush at (312) 353–6684, before visiting the Region 5 office.)

Regulation Development Section, Air Enforcement Branch (AE–17J), United States Environmental Protection Agency, Region 5, 77 West Jackson Boulevard, Chicago, Illinois 60604.

FOR FURTHER INFORMATION CONTACT: Bonnie J. Bush, Air Enforcement Branch, Regulation Development Section (AE–17J), United States Environmental Protection Agency, Region 5, Chicago, Illinois, 60604. (312) 353–6684.

SUPPLEMENTARY INFORMATION: For additional information see the direct final rule published in the rules section of this **Federal Register**.

Authority: 42 U.S.C. 7401–7671(q).

Dated: February 23, 1995.

Robert Springer,

Acting Regional Administrator.

[FR Doc. 95–7102 Filed 3–22–95; 8:45 am]

BILLING CODE 6560–50–P

40 CFR Part 52

[IL115–6791b; FRL–5166–2]

Approval and Promulgation of Implementation Plans; Illinois

AGENCY: Environmental Protection Agency (USEPA).

ACTION: Proposed rule.

SUMMARY: The United States Environmental Protection Agency (USEPA) proposes to approve the State Implementation Plan (SIP) revision request submitted by the State of Illinois on October 25, 1994, for the purpose of lowering the Reid Vapor Pressure (RVP) of gasoline from 9.0 pounds per square inch (psi) to 7.2 psi for the Metro-East St. Louis (Metro-East) ozone nonattainment area which includes Madison, Monroe, and St. Clair Counties. In the final rules section of this **Federal Register**, the USEPA is approving this action as a direct final rule without prior proposal because USEPA views this as a noncontroversial action and anticipates no adverse comments. A detailed rationale for the approval is set forth in the direct final rule. If no adverse comments are received in response to that direct final rule, no further activity is contemplated in relation to this proposed rule. If USEPA receives adverse comments, the direct final rule will be withdrawn and all public comments received will be addressed in a subsequent final rule based on the proposed rule. USEPA will not institute a second comment period on this action. Any parties interested in commenting on this notice should do so at this time.

DATES: Comments on this proposed rule must be received on or before April 24, 1995.

ADDRESSES: Written comments should be mailed to: J. Elmer Bortzer, Chief, Regulation Development Section, Regulation Development Branch (AR18–J), U.S. Environmental Protection Agency, Region 5, 77 West Jackson Boulevard, Chicago, Illinois 60604.

Copies of the State submittal and USEPA's analysis of it are available for inspection at: Regulation Development Section, Regulation Development Branch (AR18–J), U.S. Environmental Protection Agency, Region 5, 77 West Jackson Boulevard, Chicago, Illinois 60604.

FOR FURTHER INFORMATION CONTACT: Francisco Acevedo, Regulation Development Section, Regulation Development Branch (AR–18J), U.S. Environmental Protection Agency, Region 5, 77 West Jackson Boulevard, Chicago, Illinois 60604, (312) 886–6061.

SUPPLEMENTARY INFORMATION: For additional information see the direct final rule published in the rules section of this **Federal Register**.

Dated: February 23, 1995.

Robert Springer,

Acting Regional Administrator.

[FR Doc. 95–7101 Filed 3–22–95; 8:45 am]

BILLING CODE 6560–50–P

40 CFR Part 52

[CA 32–3–6502; FRL–5177–6]

Approval and Promulgation of Implementation Plans; California State Implementation Plan Revision; South Coast Air Quality Management District

AGENCY: Environmental Protection Agency (EPA).

ACTION: Notice of proposed rulemaking (NPRM).

SUMMARY: EPA is proposing a limited approval and limited disapproval of revisions to the California State Implementation Plan (SIP) for ozone. These revisions concern the control of oxides of nitrogen (NO_X) from stationary gas turbines. The intended effect of proposing limited approval and limited disapproval of this rule is to regulate emissions of NO_X in accordance with the requirements of the Clean Air Act, as amended in 1990 (CAA or the Act). EPA's final action on this notice of proposed rulemaking will incorporate this rule into the Federally approved SIP. EPA has evaluated this rule and is proposing a simultaneous limited approval and limited disapproval under provisions of the CAA regarding EPA actions on SIP submittals and general rulemaking authority because these revisions, while strengthening the SIP, also do not fully meet the CAA provisions regarding plan submissions and requirements for nonattainment areas.

DATES: Comments on this proposed action must be received in writing on or before April 24, 1995.

ADDRESSES: Comments may be mailed to: Daniel A. Meer, Rulemaking Section (A–5–3), Air and Toxics Division, U.S. Environmental Protection Agency, Region IX, 75 Hawthorne Street, San Francisco, CA 94105.

Copies of the rule and EPA's evaluation report of the rule are available for public inspection at EPA's Region IX office during normal business hours. Copies of the submitted rule are also available for inspection at the following locations:

California Air Resources Board, Stationary Source Division, Rule Evaluation Section, 2020 ''L'' Street, Sacramento, CA 95814.
South Coast Air Quality Management District, 21865 E. Copley Drive, Diamond Bar, CA 91765–4182.

FOR FURTHER INFORMATION CONTACT: Mae Wang, Rulemaking Section (A–5–3), Air and Toxics Division, U.S. Environmental Protection Agency, Region IX, 75 Hawthorne Street, San Francisco, CA 94105, Telephone: (415) 744–1200.

SUPPLEMENTARY INFORMATION:

Applicability

This document addresses EPA's proposed action for South Coast Air Quality Management District (SCAQMD) Rule 1134, Emissions of Oxides of Nitrogen from Stationary Gas Turbines. This rule was submitted by the California Air Resources Board (CARB) on December 31, 1990.

Background

On November 15, 1990, the Clean Air Act Amendments of 1990 (CAA) were enacted. Public Law 101–549, 104 Stat. 2399, codified at 42 U.S.C. 7401–7671q. The air quality planning requirements for the reduction of NO_X emissions through reasonably available control technology (RACT) are set out in section 182(f) of the CAA. On November 25, 1992, EPA published a NPRM entitled ''State Implementation Plans; Nitrogen Oxides Supplement to the General Preamble; Clean Air Act Amendments of 1990 Implementation of Title I; Proposed Rule,'' (the NO_X Supplement) which describes and provides preliminary guidance on the requirements of section 182(f). 57 FR 55620. The November 25, 1992 notice should be referred to for further information on the NO_X requirements and is incorporated into this proposal by reference.

Section 182(f) of the Clean Air Act requires States to apply the same requirements to major stationary sources of NO_X (''major'' as defined in section 302 and section 182(c), (d), and (e)) as are applied to major stationary sources of volatile organic compound (VOC) emissions, in moderate or above ozone nonattainment areas. The Los Angeles-South Coast Air Basin is classified as extreme;[1] therefore this area was subject to section 182(f), the RACT requirements of section 182(b)(2), and the November 15, 1992 deadline, cited below.

Section 182(b)(2) requires submittal of RACT rules for major stationary sources of VOC (and NO_X) emissions (not covered by a pre-enactment control technologies guidelines (CTG) document or a post-enactment CTG document) by November 15, 1992. There were no NO_X CTGs issued before enactment and EPA has not issued a CTG document for any NO_X sources since enactment of the CAA. The RACT rules covering NO_X sources and submitted as SIP revisions are expected to require final installation of the actual NO_X controls as expeditiously as practicable, but no later than May 31, 1995.

This document addresses EPA's proposed action for SCAQMD Rule 1134, Emissions of Oxides of Nitrogen from Stationary Gas Turbines. The SCAQMD adopted Rule 1134 on August 4, 1989 and the rule was submitted by the CARB on December 31, 1990. This submitted rule was found to be complete on February 28, 1991 pursuant to EPA's completeness criteria that are set forth in 40 CFR Part 51 Appendix V[2] and is being proposed for limited approval and limited disapproval.

Rule 1134 controls emissions of NO_X from the operation of gas turbines of 0.3 megawatt and larger. NO_X emissions contribute to the production of ground level ozone and smog. The rule was adopted as part of SCAQMD's efforts to achieve the National Ambient Air Quality Standards (NAAQS) for ozone and in response to the CAA requirements cited above. The following is EPA's evaluation and proposed action for this rule.

EPA Evaluation and Proposed Action

In determining the approvability of a NO_X rule, EPA must evaluate the rule for consistency with the requirements of the CAA and EPA regulations, as found in section 110, and part D of the CAA and 40 CFR part 51 (Requirements for Preparation, Adoption and Submittal of Implementation Plans). The EPA interpretation of these requirements, which forms the basis for this action, appears in the NO_X Supplement (57 FR 55620) and various EPA policy guidance documents.[3] Among these provisions is the requirement that a NO_X rule must, at a minimum, provide for the implementation of RACT for stationary sources of NO_X emissions.

For the purposes of assisting state and local agencies in developing NO_X RACT rules, EPA prepared the NO_X Supplement to the General Preamble. In the NO_X Supplement, EPA provides guidance on how RACT will be determined for stationary sources of NO_X emissions. While most of the guidance issued by EPA on what constitutes RACT for stationary sources has been directed towards application for VOC sources, much of the guidance is also applicable to RACT for stationary sources of NO_X (see section 4.5 of the NO_X Supplement). In addition, pursuant to section 183(c), EPA is issuing alternative control technique documents (ACTs), that identify alternative controls for all categories of stationary sources of NO_X. The ACT documents will provide information on control technology for stationary sources that emit or have the potential to emit 25 tons per year or more of NO_X. However, the ACTs will not establish a presumptive norm for what is considered RACT for stationary sources of NO_X. In general, the guidance documents cited above, as well as other relevant and applicable guidance documents, have been set forth to ensure that submitted NO_X RACT rules meet Federal RACT requirements and are fully enforceable and strengthen or maintain the SIP.

Rule 1134 is a new rule which was adopted to control emissions from stationary gas turbines. For this source category, CARB has made a determination on the emission levels that constitute both RACT and best available retrofit control technology (BARCT). BARCT emission levels are generally more stringent than RACT levels, and CARB has published a guidance document concerning their determination for this source category. Sources subject to Rule 1134[4] are required to meet BARCT emission limits and to use continuous emissions monitoring systems (CEMS). EPA agrees that the limits incorporated in Rule 1134 meet Federal RACT levels, and are consistent with the Agency's guidance and policy for making RACT determinations in terms of general cost-effectiveness, emission reductions, and environmental impacts.

Although SCAQMD Rule 1134 will strengthen the SIP, the rule contains deficiencies related primarily to the lack

[1] The Los Angeles-South Coast Air Basin retained its designation of nonattainment and was classified by operation of law pursuant to sections 107(d) and 181(a) upon the date of enactment of the CAA. See 56 FR 56694 (November 6, 1991).

[2] EPA adopted the completeness criteria on February 16, 1990 (55 FR 5830) and, pursuant to section 110(k)(1)(A) of the CAA, revised the criteria on August 26, 1991 (56 FR 42216).

[3] Among other things, the pre-amendment guidance consists of those portions of the proposed post-1987 ozone and carbon monoxide policy that concern RACT, 52 FR 45044 (November 24, 1987); and ''Issues Relating to VOC Regulation Cutpoints, Deficiencies, and Deviations, Clarification to Appendix D of November 24, 1987 **Federal Register** Notice'' (Blue Book) (notice of availability was published in the **Federal Register** on May 25, 1988).

[4] Rule 1134 will apply to sources which are not covered in the SCAQMD NO_X RECLAIM program.

of Federal enforceability. These deficiencies include Executive Officer discretion in approving CEMS, lack of test methods, and lack of monitoring requirements to demonstrate exemption eligibility. A more detailed discussion of the sources controlled, the controls required, justification for why these controls represent RACT, and the rule deficiencies can be found in the Technical Support Document (TSD), which is available from the U.S. EPA, Region IX office. Because of the rule deficiencies, Rule 1134 is not approvable pursuant to section 182(a)(2), section 182(b)(2), section 182(f) and part D of the CAA, because it is not consistent with the interpretation of section 172 of the 1977 CAA as found in the Blue Book and may lead to rule enforceability problems.

Because of the above deficiencies, EPA cannot grant full approval of this rule under section 110(k)(3) and part D. Also, because the submitted rule is not composed of separable parts which meet all the applicable requirements of the CAA, EPA cannot grant partial approval of the rule under section 110(k)(3). However, EPA may grant a limited approval of the submitted rule under section 110(k)(3) in light of EPA's authority pursuant to section 301(a) to adopt regulations necessary to further air quality by strengthening the SIP. The approval is limited because EPA's action also contains a simultaneous limited disapproval. In order to strengthen the SIP, EPA is proposing a limited approval of SCAQMD's submitted Rule 1134 under sections 110(k)(3), 301(a), and 182(f) of the CAA.

At the same time, EPA is also proposing a limited disapproval of this rule because it contains deficiencies which must be corrected in order to fully meet the requirements of section 182(a)(2), 182(b)(2), 182(f), and part D of the CAA. Under section 179(a)(2), if the Administrator disapproves a submission under section 110(k) for an area designated nonattainment, based on the submission's failure to meet one or more of the elements required by the Act, the Administrator must apply one of the sanctions set forth in section 179(b) unless the deficiency has been corrected within 18 months of such disapproval. Section 179(b) provides two sanctions available to the Administrator: Highway funding and offsets. The 18 month period referred to in section 179(a) will begin on the effective date of EPA's final limited disapproval. Moreover, the final disapproval triggers the Federal implementation plan (FIP) requirement under section 110(c). It should be noted that the rule covered by this NPRM has been adopted by the SCAQMD and is currently in effect in the SCAQMD. EPA's limited disapproval action will not prevent SCAQMD or EPA from enforcing this rule.

Nothing in this action should be construed as permitting or allowing or establishing a precedent for any future request for revision to any state implementation plan. Each request for revision to the state implementation plan shall be considered separately in light of specific technical, economic and environmental factors and in relation to relevant statutory and regulatory requirements.

Regulatory Flexibility

Under the Regulatory Flexibility Act, 5 U.S.C. 600 *et seq.*, EPA must prepare a regulatory flexibility analysis assessing the impact of any proposed or final rule on small entities. 5 U.S.C. 603 and 604. Alternatively, EPA may certify that the rule will not have a significant economic impact on a substantial number of small entities. Small entities include small businesses, small not-for-profit enterprises, and government entities with jurisdiction over populations of less than 50,000.

Limited approvals under section 110 and 301 and subchapter I, part D of the CAA do not create any new requirements, but simply approve requirements that the State is already imposing. Therefore, because the Federal SIP-approval does not impose any new requirements, it does not have a significant impact on affected small entities. Moreover, due to the nature of the Federal-state relationship under the CAA, preparation of a regulatory flexibility analysis would constitute Federal inquiry into the economic reasonableness of state action. The CAA forbids EPA to base its actions concerning SIPs on such grounds. *Union Electric Co.* v. *U.S. E.P.A.*, 427 U.S. 246, 256–66 (S.Ct. 1976); 42 U.S.C. 7410 (a)(2).

The Office of Management and Budget has waived this regulatory action from Executive Order 12866 review.

List of Subjects in 40 CFR Part 52

Environmental protection, Air pollution control, Hydrocarbons, Incorporation by reference, Intergovernmental relations, Nitrogen dioxide, Nitrogen oxides, Ozone, Reporting and recordkeeping requirements, Volatile organic compounds.

Authority: 42 U.S.C. 7401–7671q.

Dated: March 8, 1995.

John Wise,

Acting Regional Administrator.

[FR Doc. 95–7210 Filed 3–22–95; 8:45 am]

BILLING CODE 6560–50–P

---

40 CFR Part 300

[FRL–5177–5]

National Oil and Hazardous Substances Pollution Contingency Plan; National Priorities List

AGENCY: Environmental Protection Agency.

ACTION: Notice of intent to delete the Koch Refining Company from the National Priorities List; request for comments.

SUMMARY: The United States Environmental Protection Agency (U.S. EPA) Region V announces its intent to delete the Koch Refining Company Site from the National Priorities List (NPL) and requests public comment on this action. The NPL constitutes Appendix B of 40 CFR part 300 which is the National Oil and Hazardous Substances Pollution Contingency Plan (NCP), which U.S. EPA promulgated pursuant to Section 105 of the Comprehensive Environmental Response, Compensation, and Liability Act of 1980 (CERCLA) as amended. This action is being taken by U.S. EPA, because it has been determined that all Fund-financed responses under CERCLA have been implemented and U.S. EPA, in consultation with the State of Minnesota, has determined that no further response is appropriate. Moreover, U.S. EPA and the State have determined that remedial activities conducted at the Site to date have been protective of public health, welfare, and the environment.

DATES: Comments concerning the proposed deletion of the Site from the NPL may be submitted on or before April 24, 1995.

ADDRESSES: Comments may be mailed to Gladys Beard (HSRM–J) Associate Remedial Project Manager, Office of Superfund, U.S. EPA, Region V, 77 W. Jackson Blvd., Chicago, IL 60604. Comprehensive information on the site is available at U.S. EPA's Region V office and at the local information repository located at: Minnesota Pollution Agency Public Library, 520 Lafayette RD. St. Paul, MN 55155–194. Requests for comprehensive copies of documents should be directed formally to the Region V Docket Office. The address and phone number for the Regional Docket Officer is Jan

Pfundheller (H–J), U.S. EPA, Region V, 77 W. Jackson Blvd., Chicago, IL 60604, (312) 353–821.

FOR FURTHER INFORMATION CONTACT: Gladys Beard (HSRM–J) Associate Remedial Project Manager, Office of Superfund, U.S. EPA, Region V, 77 W. Jackson Blvd., Chicago, IL 60604, (312) 886–253 or Cheryl Allen (P–9J), Office of Public Affairs, U.S. EPA, Region V, 77 W. Jackson Blvd., Chicago, IL 60604, (312) 353–6196.

SUPPLEMENTARY INFORMATION:

Table of Contents

I. Introduction
II. NPL Deletion Criteria
III. Deletion Procedures
IV. Basis for Intended Site Deletion

I. Introduction

The U.S. Environmental Protection Agency (EPA) Region V announces its intent to delete the Koch refining Company Site from the National Priorities List (NPL), which constitutes Appendix B of the National Oil and Hazardous Substances Pollution Contingency Plan (NCP), and requests comments on the proposed deletion. The EPA identifies sites that appear to present a significant risk to public health, welfare or the environment, and maintains the NPL as the list of those sites. Sites on the NPL may be the subject of remedial actions financed by the Hazardous Substance Superfund Response Trust Fund (Fund). Pursuant to Section 300.425(e)(3) of the NCP, any site deleted from the NPL remains eligible for Fund-financed remedial actions if the conditions at the site warrant such action.

The U.S. EPA will accept comments on this proposal for thirty (30) days after publication of this notice in the **Federal Register**.

Section II of this notice explains the criteria for deleting sites from the NPL. Section III discusses procedures that EPA is using for this action. Section IV discusses the history of this site and explains how the site meets the deletion criteria.

Deletion of sites from the NPL does not itself create, alter, or revoke any individual's rights or obligations. Furthermore, deletion from the NPL does not in any way alter U.S. EPA's right to take enforcement actions, as appropriate. The NPL is designed primarily for informational purposes and to assist in Agency management.

II. NPL Deletion Criteria

The NCP establishes the criteria the Agency uses to delete Sites from the NPL. In accordance with 40 CFR 300.425(e), sites may be deleted from the NPL where no further response is appropriate. In making this determination, U.S. EPA will consider, in consultation with the State, whether any of the following criteria have been met:

(i) Responsible parties or other persons have implemented all appropriate response actions required; or

(ii) All appropriate Fund-financed responses under CERCLA have been implemented, and no further response action by responsible parties is appropriate; or

(iii) The Remedial investigation has shown that the release poses no significant threat to public health or the environment and, therefore, remedial measures are not appropriate.

III. Deletion Procedures

Upon determination that at least one of the criteria described in 300.425(e) has been met, U.S. EPA may formally begin deletion procedures once the State has concurred. This **Federal Register** notice, and a concurrent notice in the local newspaper in the vicinity of the Site, announce the initiation of a 30-day comment period. The public is asked to comment on U.S. EPA's intention to delete the Site from the NPL. All critical documents needed to evaluate U.S. EPA's decision are included in the information repository and the deletion docket.

Upon completion of the public comment period, if necessary, the U.S. EPA Regional Office will prepare a Responsiveness Summary to evaluate and address comments that were received. The public is welcome to contact the U.S. EPA Region V Office to obtain a copy of this responsiveness summary, if one is prepared. If U.S. EPA then determines the deletion from the NPL is appropriate, final notice of deletion will be published in the **Federal Register**.

IV. Basis for Intended Site Deletion

The Koch Refining Company is located at the Junction of Highway 52 and 54 in Rosemount, Dakota County, Minnesota. In 1984, the staff from the Minnesota Pollution Control Agency (MPCA) and Minnesota Department of Health (MDH) sampled and analyzed two residential wells downgradient of the Koch Refining Company (Koch) Site. The analysis of the samples indicated the residential wells were contaminated with VOCs. The Koch Refining Company had been supplying bottled water to these two residents as well as a third since the early 1970's in response to analytical results showing high specific conductance, phenols and elevated concentrations of several major ions. Potential sources of contamination at the Site included leaks, spills and discharges from active and inactive watewater lagoons, process areas, internal pipelines and waste treatment areas.

On October 15, 1984, the Site was placed on the Permanent List Priorities (PLP) and the National Priorities List (NPL), **Federal Register** 49 page 40320.

In January 1985, a Request for Response Action (RFRA) was issued to Koch requesting Koch to conduct a Remedial Investigation/Feasibility Study (RI/FS) for the Site. The Site investigations, reported in the 1986 and 1988 RI, identified the source of contamination in the residential wells to be from a petroleum release originating from the on-site barge dock pipeline. The RI reports also identified several areas of concern including solid waste management units that the MPCA is currently addressing under the authority contained in the Resource Conservation Recovery Act (RCRA). In addition, the petroleum releases are being addressed by the Underground Storage Tank (UST) regulations of RCRA. However, because the barge dock pipeline release was being addressed under Superfund authority, it was not included in the areas addressed by the UST regulation of RCRA. Therefore, the MPCA pursued the completion of the RI/FS and developed and implemented a Record of Decision (ROD) for the barge dock pipeline release.

The ROD identified three operable units to be addressed as a part of the remediation of the barge dock release: the Product Recovery System for removal and treatment of free floating hydrocarbon and contaminated ground water; the Ground Water Gradient Control System for containment and treatment of contaminated ground water; and the Soil Gas Extraction System for treatment of contaminated soil. Koch has implemented the product system and is working on a pilot study for the Soil Gas Extraction System. The pilot study is part of the Tank 12 release soil gas extraction system currently being addressed under the authority contained in the UST regulations of RCRA. The Tank 12 release is a petroleum spill from a storage tank number twelve.

The Underground Storage Tank Program, established in Subtitle I of the Resource Conservation Act (RCRA), as amended by the Hazardous and Solid Waste Amendments for 1984 (HSWA) is the regulatory authority with jurisdiction over cleanup of petroleum releases. Therefore, it is recommended that clean-up activities for the barge

dock pipeline be implemented under the authorities contained in the UST provisions of RCRA. The MPCA is in agreement with this approach.

The transfer of Site clean-up activities from CERCLA to RCRA authority is completed once the NPL and PLP delisting has taken place.

EPA, with concurrence from the State of Minnesota, has determined that all appropriate Fund-financed responses under CERCLA at the Koch Company Superfund Site have been completed, and no further CERCLA response is appropriate in order to provide protection of human health and the environment. Therefore, EPA proposes to delete the site from the NPL.

Dated: March 9, 1995.

David A. Ullrich,

Acting Regional Administrator, U.S. EPA, Region V.

[FR Doc. 95–7195 Filed 3–22–95; 8:45 am]

BILLING CODE 6560–50–P

FEDERAL COMMUNICATIONS COMMISSION

47 CFR Part 1

[MM Docket No. 95–31; FCC 95–79]

Reexamination of the Comparative Standards for New Noncommercial Educational Applicants

AGENCY: Federal Communications Commission.

ACTION: Proposed rule.

SUMMARY: By this *Notice of Proposed Rulemaking*, the Commission seeks additional comments relating to possible modification of the criteria currently used to select among competing applicants for new noncommercial educational broadcast facilities.

DATES: Comments are due April 24, 1995; reply comments are due May 10, 1995.

FOR FURTHER INFORMATION CONTACT: Michael Wagner, Mass Media Bureau, (202) 418–2720.

SUPPLEMENTARY INFORMATION: This is a summary of the Commission's Notice of Proposed Rulemaking in MM Docket No. 95–31, adopted February 28, 1995 and released March 17, 1995. The full text of this Commission decision is available for inspection and copying during regular business hours in the FCC Reference Center (Room 239), 1919 M Street, N.W., Washington D.C. The complete text of this decision also may be purchased from the Commission's duplicating contractor, International Transcription Service, Inc., (202) 857–3800, 2100 M Street, N.W., Suite 140, Washington, D.C. 20037.

Summary of Notice of Proposed Rulemaking

1. In its *Notice of Proposed Rulemaking In the matter of Reexamination of the Policy Statement on Comparative Broadcast Hearings*, GC Docket No. 92–52, 7 FCC Rcd 2664, 2669 [57 Fed. Reg. 14683] (1992) (''*1992 NPRM*''), the Commission initiated a general proceeding to reform the criteria used to select among mutually exclusive applicants for new broadcast facilities. While primarily concerned with the *1965 Policy Statement* on commercial broadcast hearings [1 FCC 2d 393 (1965)], the Commission noted in Paragraph 39 of the *1992 NPRM* that the standard used in noncommercial educational (''NCE'') proceedings was ''vague'' and difficult to apply. The Commission ''tentatively concluded'' that the standard should be eliminated, and invited comments on: (1) whether a modified version of the ''point system'' proposed for commercial applicants in the *1992 NPRM* should be adopted for NCE applicants; (2) whether the criteria used to select commercial applicants are relevant in NCE proceedings; and (3) whether a different comparative approach should be followed for state-owned public broadcasters as opposed to other NCE applicants.

2. Six commenters responded to the *1992 NPRM*. Examination of the comments leads the Commission to conclude that the comments received may not be representative of the full range of actual and potential NCE station operators. Furthermore, while most commenters agree on several points, only two commenters described detailed alternatives to the current criteria, and those proposals are widely divergent.

3. For these reasons, the Commission believes it appropriate to seek additional comments regarding both the existing NCE comparative criteria and the two alternatives already submitted. In order to focus the comments and encourage beneficial input, the Commission lists eight specific questions upon which input is sought.

4. Finally, the Commission has imposed a partial freeze on the processing of mutually exclusive NCE applications until it has adopted new or revised NCE comparative criteria: as of the release date of this *Notice*, the Commission will not designate mutually exclusive NCE applications for comparative hearing. Additionally, presiding Administrative Law Judges, the Review Board, and the Commission will no longer issue decisions in pending hearing proceedings involving competing NCE applicants where those decisions would rely upon the existing NCE comparative criteria. The Judges, Board, and Commission will, however, continue to encourage and, where appropriate, approve settlements among NCE applicants now involved in hearing proceedings provided such settlements comply with current Commission policies governing those agreements.

5. The Commission is sensitive to the need to resolve the issues presented in this proceeding as quickly as possible. It has therefore established a short comment and reply period and will act expeditiously once the comment cycle is completed.

List of Subjects in 47 CFR Part 1

Administrative practice and procedure.

Federal Communications Commission.

William F. Caton,

Acting Secretary.

[FR Doc. 95–7121 Filed 3–22–95; 8:45 am]

BILLING CODE 6712–01–M

47 CFR Part 73

[MM Docket No. 95–32, RM–8545]

Radio Broadcasting Services; Parker and Port St. Joe, Florida

AGENCY: Federal Communications Commission.

ACTION: Proposed rule.

SUMMARY: This document requests comments on a petition filed by Southern Broadcasting Companies, Inc., licensee of Station WPBH, Channel 233C, Port St. Joe, Florida, requesting the reallotment of Channel 233C from Port St. Joe, Florida, to Parker, Florida, and the modification of its license to specify Parker as its community of license, in accordance with Section 1.420(i) of the Commission's rules. The coordinates for Channel 233C at Parker are North Latitude 29–49–09 and West Longitude 85–15–34.

DATES: Comments must be filed on or before May 11, 1995,and reply comments on or before May 26, 1995.

ADDRESSES: Federal Communications Commission, Washington, D.C. 20554. In addition to filing comments with the FCC, interested parties should serve the petitioner, or its counsel or consultant, as follows: Gary S. Smithwick, Shaun A. Maher, Smithwick & Belendiuk, P.C., 1990 M Street, NW, Suite 510, Washington, D.C. 20036 (Attorneys for Petitioner).

FOR FURTHER INFORMATION CONTACT: Nancy J. Walls, Mass Media Bureau, (202) 418–2180.

SUPPLEMENTARY INFORMATION: This is a synopsis of the Commission's *Notice of Proposed Rule Making,* MM Docket No. 95–32, adopted March 20, 1995, and released March 20, 1995. The full text of this Commission decision is available for inspection and copying during normal business hours in the FCC Reference Center (Room 239), 1919 M Street, NW, Washington, D.C. The complete text of this decision may also be purchased from the Commission's copy contractors, International Transcription Service, Inc., (202) 857–3800, 1919 M Street, NW, Room 246, or 2100 M Street, NW, Suite 140, Washington, D.C. 20037.

Provisions of the Regulatory Flexibility Act of l980 do not apply to this proceeding.

Members of the public should note that from the time a Notice of Proposed Rule Making is issued until the matter is no longer subject to Commission consideration or court review, all *ex parte* contacts are prohibited in Commission proceedings, such as this one, which involve channel allotments. See 47 CFR 1.1204(b) for rules governing permissible *ex parte* contacts.

For information regarding proper filing procedures for comments, see 47 CFR 1.415 and 1.420.

List of Subjects in 47 CFR Part 73

Radio broadcasting.

Federal Communications Commission.

John A. Karousos,

Chief, Allocations Branch, Policy and Rules Division, Mass Media Bureau.

[FR Doc. 95–7122 Filed 3–22–95; 8:45 am]

BILLING CODE 6712–01–F

DEPARTMENT OF DEFENSE

48 CFR Parts 245 and 252

Defense Federal Acquisition Regulation Supplement; Demilitarization

AGENCY: Department of Defense (DoD).

ACTION: Supplementary notice of proposed rulemaking with request for public comments.

SUMMARY: The Defense Acquisition Regulations Council is proposing changes to the Defense FAR Supplement (DFARS) to cover control of Munitions List items (MLI) and Strategic List items (SLI) and demilitarization of excess property.

DATES: Comments on the proposed rule should be submitted to the address shown below on or before May 22, 1995 to be considered in the formulation of a final rule.

ADDRESSES: Interested parties should submit written comments to: Defense Acquisition Regulations Directorate, ATTN: IMD 3D139, PDUSD (A&T), 3062 Defense Pentagon, Washington, D.C. 20301–3062. FAX (703) 602–0350. Please cite DFARS Case 92–D024 in all correspondence related to this case.

FOR FURTHER INFORMATION CONTACT: LTC Ed King; (703) 602–0131.

SUPPLEMENTARY INFORMATION:

A. Background

A proposed rule was published in the **Federal Register** on March 16, 1994 (59 FR 12223). The rule proposed amendments to the DFARS by adding a subsection at 245.604–70 and a clause at 252.245–7XXX, and by revising 245.601, 245.604, 245,610–4, and 245.7310–1 to improve control of Munitions List items (MLI) and Strategic List items (SLI) and demilitarization of excess contractor inventory. Twenty comments from four respondents were received during the public comment period. After evaluating the public comments, the DAR Council agreed to publish another proposed rule incorporating the following changes:

—The term ''Security Trade Controls'' is changed to read ''Trade Security Controls.''

—DFARS 245.604–70(a) and 252.245–7XXX(b) are rewritten for clarity.

—Subparagraph (b)(4) to DFARS 252.245–7XXX is added to cover those situations where contractor acquired property is transferred to another Government contract and is treated as Government-Furnished Property.

B. Regulatory Flexibility Act

The Regulatory Flexibility Act applies, but the proposed rule is not expected to have a significant economic impact on a substantial number of small entities within the meaning of the Regulatory Flexibility Act, 5 U.S.C. 601, *et seq.*, because the vast majority of property to be demilitarized, including MLI and SLI, is in the custody of large contractors. An initial Regulatory Flexibility Analysis (IRFA) has therefore not been performed. Comments are invited from small businesses and other interested parties. Comments from small entities concerning the affected DFARS subparts will be considered in accordance with Section 610 of the Act. Such comments must be submitted separately and should cite DAR Case 92–D024 in all correspondence.

C. Paperwork Reduction Act

The Paperwork Reduction Act applies because the proposed rule imposes additional reporting requirements which require the approval of OMB under 44 U.S.C. 3501, *et seq.* On May 10, 1994, OMB approved OMB Clearance 0704–0363 for 17,500 hours. That clearance covered the reporting requirements associated with the proposed rule published on March 16, 1994 (59 FR 12223). This supplemental proposed rule imposes an additional reporting requirement at 252.245–7XXX(b)(4). As a result, a request for revision to the previously approved clearance has been submitted to OMB reflecting an increase of 2500 hours.

List of Subjects in 48 CFR Parts 245 and 252

Government procurement.

Claudia L. Naugle,

Executive Editor, Defense Acquisition Regulations Directorate.

Therefore it is proposed that 48 CFR Parts 245 and 252 be amended as follows:

1. The authority citation for 48 CFR Parts 245 and 252 continues to read as follows:

Authority: 41 U.S.C. 421 and 48 CFR Chapter 1.

2. Section 245.601 is amended by revising paragraph (2) to read as follows:

§ 245.601 Definitions

* * * * *

(2) *Demilitarization* is defined in the clause at 252.245–7XXX, Demilitarization and Trade Security Controls.

* * * * *

§ 245.604 [Amended]

3. Section 245.604 is amended by removing paragraph (3) and redesignating paragraphs (4) and (5) as paragraphs (3) and (4).

4. Section 245.604–70 is added to read as follows:

§ 245.604–70 Demilitarization and security trade controls.

(a) Contracting officers shall ensure that solicitations and contracts include a demilitarization code for each item of Government-furnished property in accordance with DoD 4160.21–M–1, Defense Demilitarization Manual.

(b) *Contract clause.*

Use the clause at 252.245–7XXX, Demilitarization and Trade Security Controls, in solicitations and contracts whenever Government property is either furnished to contractors, or whenever the contractor is authorized to acquire/manufacture items for the Government's

account for use in performance of the contract.

5. Section 245.7310–1 is amended by revising paragraph (a) to read as follows:

§ 245.7310–1 Demilitarization.

* * * * *

(a) *Demilitarization.*

Item(s) _____ require demilitarization by the Purchaser in the manner and to the degree set forth in the Defense Demilitarization Manual, DoD 4160.21–M–1.

* * * * *

6. Section 252.245–7XXX is added to read as follows:

§ 252.245–7XXX Demilitarization and Trade Security Controls.

As prescribed in 245.604–70(b), use the following clause:

Demilitarization and Trade Security Controls (XXX 1995)

(a) *Definitions.*

Demilitarization means the act of destroying the military offensive or defensive advantage inherent in certain types of equipment or material. The term includes mutilation, dumping at sea, cutting, crushing, scrapping, melting, burning or alteration designed to prevent the further use of this equipment and material for its originally intended military or lethal purpose and applies equally to material in unserviceable or serviceable condition, that has been screened through the Inventory Control Point (ICP) and declared surplus or foreign excess.

Munititions List item means any item contained in the U.S. Munitions list (22 CFR Part 121).

Trade Security Controls means control procedures designed to preclude the sale or shipment of Munitions List of Strategic List property to any entity whose interests are inimical to those of the United States. These controls are also applicable to such other selected property as may be designated by the Deputy Under Secretary of Defense (Trade Security Policy).

Strategic List item means an item assigned a code letter ''A'' or ''B'' following the export control classification number (ECCN) on the Commerce Control List, Supplement No. 1 to Section 799.1 of the Export Administration Regulations Department of Commerce.

(b) When Government property becomes excess to the needs of the Contractor in performing this contract, the Contractor shall—

(1) Ensure the appropriate demilitarization code is included in the item description on inventory schedules generated to report the excess Government property, utilizing the guidelines provided in the Defense Demilitarization Manual, DoD 4160.21–M–1;

(2) Ensure demilitarization of the items, if required; and

(3) Apply trade security controls as required by the Arms Export Control Act and 22 CFR Parts 120–130, the International Traffic in Arms Regulations; the Export Administration Act of 1979 and 15 CFR parts 700–799, the Export Administration Regulations; and DoD 4160.21–M–1, Defense Demilitarization Manual.

(4) Ensure a demilitarization code is included in the item description on all transfer documents when Contractor-acquired property is transferred to a follow on contract, utilizing the guidelines provided in the Defense Demilitarization Manual, DoD 4160.21–M–1.

(c) The Contractor also shall include this clause, including this paragraph (c) in any subcontract issued under this contract.

(End of clause)

[FR Doc. 95–7014 Filed 3–22–95; 8:45 am]

BILLING CODE 3810–01–M

DEPARTMENT OF THE INTERIOR

Fish and Wildlife Service

50 CFR Part 14

RIN 1018–AB49

Importation, Exportation, and Transportation of Wildlife

AGENCY: Fish and Wildlife Service, Interior.

ACTION: Proposed rule; supplemental.

SUMMARY: The U.S. Fish and Wildlife Service (Service) is proposing additional changes to its regulations providing for uniform rules and procedures for the importation, exportation, and transportation of wildlife. The Service is proposing to allow the importation and exportation of dead, preserved, dried, or embedded scientific wildlife specimens by accredited scientists or accredited scientific institutions at any U.S. Customs port, or by way of the international mail. This proposed rule is a supplement to the Service's previous proposal published on September 14, 1994.

DATES: Comments must be submitted on or before May 22, 1995.

ADDRESSES: Comments and materials concerning this proposal should be sent to the Director, U.S. Fish and Wildlife Service, P.O. Box 3247, Arlington, Virginia 22203–3247. Comments and materials may be hand-delivered to the U.S. Fish and Wildlife Service, Division of Law Enforcement, 4401 N. Fairfax Drive, Room 500, Arlington, Virginia, between the hours of 8:00 a.m. and 4:00 p.m., Monday through Friday.

FOR FURTHER INFORMATION CONTACT: Frank Shoemaker, Special Agent in Charge, Branch of Investigations, Division of Law Enforcement, telephone (703) 358–1949.

SUPPLEMENTARY INFORMATION: On Wednesday, September 14, 1994, the Service published in the **Federal Register** (59 FR 47212) a proposed rule amending 50 CFR parts 13 and 14. Since the date of the publication of this prior proposed rule, the Service has received numerous inquiries from the scientific community concerned about the effects of the Service's regulations upon the ordinary scientific exchange of dead, preserved, dried, or embedded taxonomic or systematic collection specimens, or parts thereof, being imported or exported through the international mail or by way of ports other than Service designated ports of entry. The Service's proposed rule of September 14, 1994, made no substantive changes to the prior requirements of the existing regulations related to such matters and only touched upon such requirements tangentially. The Service has become aware, however, in responding to the numerous public inquiries regarding the scope of the proposed rule that some reasonable concerns exist with respect to its present requirements governing the importation or exportation of taxonomic or systematic collection specimens, or parts thereof, and acknowledges that some substantive changes to those requirements are necessarily in order. The Service, therefore, is making supplementary proposals at this time, in addition to those already published in the proposed rule of September 14, 1994. The Service makes these proposals in an effort to facilitate the importation and exportation of dead, preserved, dried, or embedded scientific specimens or parts thereof, encompassed within the definition of wildlife, and thereby alleviate any unnecessary impediments to scientific exchange its existing regulations may have imposed.

The Service is proposing to facilitate the importation or exportation of dead, preserved, dried, or embedded scientific taxonomic or systematic collection specimens, or parts thereof, by accredited scientists or accredited institutions by making several changes in its current regulations. The Service, in order to clarify its requirements, will define the terms ''Accredited scientific institutions'' and ''Accredited scientist'' in the definition section provided in § 14.4. The term ''Accredited scientific institutions'' is defined to include any public museum, public zoological park, accredited institution of higher education, accredited member of the American Zoological Association, accredited member of the American Association of Systematic Collections, or any State or Federal government agency that conducts biological or medical research. The term ''Accredited scientist'' is defined to include any individual associated with, employed by, or under contract to and accredited

by an accredited scientific institution for the purposes of conducting biological or medical research, and whose research activities are approved and sponsored by the scientific institution granting accreditation.

The Service will also add a new section at § 14.24, to be entitled Scientific Specimens. This new section will provide for dead, preserved, dried, or embedded taxonomic or systematic collection specimens to be imported or exported by accredited scientists and/or scientific institutions by way of any U.S. Customs port or to be shipped through the international mail. This exception, however, will not apply in situations where the wildlife being imported or exported requires a permit under any of the Service regulations established in 50 CFR parts 16, 17, 18, 21, 22, and 23 that set forth the Service regulations implementing: the Lacey Act, (18 U.S.C. 42); the Endangered Species Act (ESA), (16 U.S.C. 1531–1543); the Marine Mammal Protection Act (MMPA), (16 U.S.C. 1361–1407); the Migratory Bird Treaty Act (MBTA), (16 U.S.C. 703–712); the Bald and Golden Eagle Protection Act (Eagle Act), (16 U.S.C. 668); and the Convention on International Trade in Endangered Species of Wild Flora and Fauna (CITES), respectively. In addition this exception will not apply to any specimen or part of any specimen taken as a result of sport hunting. The term ''sport hunting'' will be given its common and ordinary meaning.

In general all wildlife imported into the United States must be cleared in accordance with § 14.52 by a Service officer prior to its release from detention by Customs officers. Clearance by a Service officer may be obtained only at designated ports, border ports, special ports, or any port where importation is authorized by permit, unless the wildlife is otherwise exempted from such requirement. The Service's existing exceptions to clearance requirements for certain wildlife are set forth in § 14.55. The Service is proposing to amend § 14.55 by adding a new paragraph at § 14.55(d) providing an additional exception to the Service clearance requirements for dead, preserved, dried, or embedded specimens or parts thereof, imported or exported by accredited scientists and/or accredited scientific institutions for taxonomic or systematic research purposes.

The provisions of § 14.61 require that a completed Declaration for Importation and Exportation of Fish and Wildlife (Form 3–177) be filed with the Service when clearance is requested. A Declaration for Importation and Exportation of Wildlife does not have to be filed, however, for certain categories of wildlife provided an exception under § 14.62, entitled Exceptions to Import Declaration Requirements. The Service is amending § 14.62 by revising § § 14.62(c) and adding a new paragraph at § 14.62(d) to provide an additional exception to the import declaration requirements. This provision will provide that a Declaration for the Importation or Exportation of Fish or Wildlife (Form 3–177) does not have to be filed at the time of importation for shipments of dead, preserved, dried, or embedded scientific specimens or parts thereof, imported by accredited scientists and/or accredited scientific institutions for taxonomic or systematic research purposes. This exception, however, will not apply in situations where the wildlife being imported requires a permit under any of the Service regulations established in Title 50 CFR Parts 16, 17, 18, 21, 22, and 23.

Except for wildlife requiring a permit pursuant to parts 16, 17, 18, 21, 22 and 23 of this subchapter, the new § 14.62(d) will provide that a Declaration for the Importation or Exportation of Fish or Wildlife (Form 3–177) does not have to be filed at the time of importation for shipments of dead, preserved, dried, or embedded scientific specimens or parts thereof, imported by accredited scientists and/or accredited scientific institutions for taxonomic or systematic research purposes. A Form 3–177 must be filed within 180 days of importation with the appropriate Assistant Regional Director—Law Enforcement in the Region where the importation occurs. The specimens must be identified to the most accurate taxonomic classification reasonably practicable using the best available taxonomic information, and the country of origin must be declared. This exception to the import declaration requirements will be limited to only exchanges made by accredited scientists or accredited scientific institutions and shall not apply to any specimens or parts thereof, taken as a result of sport hunting.

Section 14.63 set forth the requirement that a completed Declaration of Importation and Exportation of Fish or Wildlife (Form 3-177) must be filed with the Service prior to the export of any wildlife. Certain exceptions to this export declaration requirement are provided in § 14.64. The Service is amending § 14.64, by adding a new paragraph at § 14.64(b)(3) to provide an additional exception to the Service's export declaration requirements. This exception will provide that a Declaration for the Importation or Exportation of Fish or Wildlife (Form 3–177) does not have to be filed at the time of exportation for shipments of dead, preserved dried, or embedded scientific specimens or parts thereof, exported by accredited scientists and/or accredited scientific institutions for taxonomic or systematic research purposes. This exception, however, will not apply in situations where the wildlife being exported requires a permit under any of the Service regulations established in Title 50 CFR parts 16, 17, 18, 21, 22, and 23.

Except for wildlife requiring a permit pursuant to parts 16, 17, 18, 21, 22 and 23 of this subchapter, the new § 14.63(b)(3) will provide that a Declaration for the Importation or Exportation of Fish or Wildlife (Form 3–177) does not have to be filed at the time of exportation for shipments of dead, preserved, dried, or embedded scientific specimens or parts thereof, exported by accredited scientists and/or accredited scientific institutions for taxonomic or systematic research purposes. A Form 3–177 must be filed within 180 days of exportation with the appropriate Assistant Regional Director—Law Enforcement in the Region where the exportation occurs. The specimens must be identified to the most accurate taxonomic classification reasonably practicable using the best available taxonomic information, and the country of origin must be declared. This exception to the export declaration requirements will be limited to only exchanges made by accredited scientists or accredited scientific institutions and will not apply to any specimens or parts thereof, taken as result of sport hunting.

The Service is currently deliberating upon the comments received to its earlier proposed rule. The Service invites public comments to these new proposals and will respond to all comments to its proposals in the final rule.

Required Determination

This rule was not subject to Office of Management and Budget (OMB) review under Executive Order 12866. The Department of the Interior (Department) has determined that this proposed rule will not have a significant economic effect on a substantial number of small entities under the Regulatory Act (5 U.S.C. 601 *et seq.*). This action is not expected to have significant taking implications, as per Executive Order 12630.

This proposed rule does not contain any additional information collection requirements, beyond those already approved under OMB Approval Number 1018–0012, that would require approval by the Office of Management and Budget under the Paperwork Reduction

Act, 44 U.S.C. 3501 *et seq.* This action does not contain any federalism impacts as described in Executive Order 12612.

These proposed changes in the regulations in parts 13 and 14 are regulatory and enforcement actions which are covered by a categorical exclusion from National Environmental Policy Act procedures under 516 Department Manual and an Environmental Action Memorandum is on file at the Service's office in Arlington, Virginia. A determination has been made pursuant to Section 7 of the Endangered Species Act that the proposed revision of part 14 will not effect federally listed species. The Department has certified to OMB that these regulations meet the applicable standards provided in Section 2(a) and 2(b)(2) of Executive Order 12778.

Authorship. The originators of this proposed rule are Special Agents Frank Shoemaker and Marty Hernandez, and Law Enforcement Specialist Paul McGowan, Division of Law Enforcement, U.S. Fish and Wildlife Service, Washington, D.C.

List of Subjects in 50 CFR Part 14

Animal welfare, Exports, Fish, Imports, Labeling, Reporting and recordkeeping requirements, Transportation, Wildlife.

Regulation Promulgation

For the reasons set out in the preamble, title 50, chapter I, subchapter B of the Code of Federal Regulations is proposed to be amended as set forth below:

PART 14—[AMENDED]

1. The authority citation for part 14 is revised to read as follows:

Authority: 16 U.S.C. 704, 712, 1382, 1538(d)-(f), 1539, 1540(f), 3371–3378, 4223–4244, and 4901–4916; 18 U.S.C. 42; 31 U.S.C. 483(a).

2. Section 14.4, as proposed to be added at 59 FR 47217, September 14, 1994, is amended by adding paragraphs (e) and (f) to read as follows:

§ 14.4 Definitions.

* * * * *

(e) Accredited scientific institutions include any public museum, public zoological park, accredited institution of higher education, accredited member of the American Zoological Association, accredited member of the American Zoological Association, accredited member of the American Association of Systematic Collections, or any State or Federal government agency that conducts biological or medical research.

(f) Accredited scientist includes any individual associated with, employed by, or under contract to and accredited by an accredited scientific institution for the purposes of conducting biological or medical research, and whose research activities are approved and sponsored by the scientific institution granting accreditation.

3. A new § 14.24 is added to read as follows:

§ 14.24 Scientific specimens.

Except for wildlife requiring a permit pursuant to parts 16, 17, 18, 21, 22 and 23 of this subchapter, dead, preserved, dried, or embedded scientific specimens or parts thereof, imported or exported by accredited scientists and/or accredited scientific institutions may be imported or exported through any U.S. Customs port, or may be shipped through the international mail system. *Provided:* That this exception will not apply to any specimens or parts thereof, taken as a result of sport hunting.

4. Section 14.55 is amended by adding paragraph (d) to read as follows:

§ 14.55 Exceptions to clearance requirements.

* * * * *

(d) Dead, preserved, dried, or embedded scientific specimens or parts thereof, imported or exported by accredited scientists and/or accredited scientific institutions for taxonomic or systematic research purposes. *Provided:* That this exception will not apply to any specimens or parts thereof, taken as a result of sport hunting.

5. Section 14.62 is amended by revising paragraph (c) and adding paragraph (d) to read as follows:

§ 14.62 Exceptions to import declaration requirements.

* * * * *

(c) *General declarations for certain specimens.* Notwithstanding the provisions of § 14.61 and except for wildlife included in paragraph (d) of this section, scientific specimens imported for scientific institutions for taxonomic, systematic research, or faunal survey purposes may be described in general terms on a Declaration for the Importation or Exportation of Fish or Wildlife (Form 3–177). An amended Form 3–177 must be filed within 180 days after filing of the general declaration with the Service. The specimens must be identified to the most accurate taxonomic classification reasonably practicable using the best available taxonomic information. Extensions of the 180 day period may be granted by the Director.

(d) Except for wildlife requiring a permit pursuant to parts 16, 17, 18, 21, 22 and 23 of this subchapter, a Declaration for the Importation or Exportation of Fish or Wildlife (Form 3–177) does not have to be filed at the time of importation for shipments of dead, preserved, dried, or embedded scientific specimens or parts thereof, imported by accredited scientists and/or accredited scientific institutions for taxonomic or systematic research purposes. A Form 3–177 must be filed within 180 days of importation with the appropriate Assistant Regional Director—Law Enforcement in the Region where the importation occurs. The specimens must be identified to the most accurate taxonomic classification reasonably practicable using the best available taxonomic information, and the country of origin must be declared. *Provided:* That this exception will not apply to any specimens or parts thereof, taken as a result of sport hunting.

6. Section 14.64 is amended by adding paragraph (b)(3) to read as follows:

§ 14.64 Exceptions to export declaration requirements.

* * * * *

(b) * * *

(3) Except for wildlife requiring a permit pursuant to parts 16, 17, 18, 21, 22 and 23 of this subchapter, a Declaration for the Importation or Exportation of Fish or Wildlife (Form 3–177) does not have to be filed at the time of exportation for shipments of dead, preserved, dried, or embedded scientific specimens or parts thereof, exported by accredited scientists and/or accredited scientific institutions for taxonomic or systematic research purposes. A Form 3–177 must be filed within 180 days of exportation with the appropriate Assistant Regional Director—Law Enforcement in the Region where the exportation occurs. The specimens must be identified to the most accurate taxonomic classification reasonably practicable using the best available taxonomic information, and the country of origin must be declared. *Provided:* That this exception shall not apply to any specimens or parts thereof, taken as a result of sport hunting.

Dated: February 10, 1995.

George T. Frampton Jr.,

Assistant Secretary for Fish and Wildlife and Parks.

[FR Doc. 95–7085 Filed 3–22–95; 8:45 am]

BILLING CODE 4310–55–M

50 CFR Part 17

Endangered and Threatened Wildlife and Plants; Notice of Finding on a Petition to Emergency List the Amargosa Toad (Bufo nelsoni) as Endangered

AGENCY: Fish and Wildlife Service, Interior.

ACTION: Notice of 90-day petition finding and initiation of status review.

SUMMARY: The U.S. Fish and Wildlife Service (Service) announces a 90-day finding on a petition to list the Amargosa toad (*Bufo nelsoni*) under the Endangered Species Act of 1973, as amended (Act). The petition was found to present substantial information indicating the requested action may be warranted. The Service therefore initiates a status review and will prepare a 12 month finding at a later date.

DATES: The finding announced in this document was made on March 17, 1995. Comments and information concerning this petition finding must be submitted within 30 days of the publication of the finding in the **Federal Register** to be considered in the 12-month finding for this petition.

ADDRESSES: Data, information, comments, or questions concerning this finding should be sent to the Field Supervisor, U.S. Fish and Wildlife Service, 4600 Kietzke Lane, Building C Room 125, Reno, Nevada 89502. The petition, finding, and supporting data are available for public inspection, by appointment, during normal business hours at the above address.

FOR FURTHER INFORMATION CONTACT: Sheryl Barrett, Fish and Wildlife Biologist, see **ADDRESSES** section above or telephone 702–784–5227.

SUPPLEMENTARY INFORMATION:

Background

Section 4(b)(3)(A) of the Endangered Species Act (Act) of 1973, as amended (16 U.S.C. 1531 *et seq.*), requires that the U.S. Fish and Wildlife Service (Service) make a finding on whether a petition to list, delist, or reclassify a species presents substantial scientific or commercial information indicating that the petitioned action may be warranted. To the maximum extent practicable, this finding is to be made within 90 days of the receipt of the petition, and the finding is to be published promptly in the **Federal Register**. This finding is to be based on information contained in the petition and otherwise available to the Service at the time the finding is made. If the finding is that substantial information was presented, the Service also is required to review the status of the species involved if one has not already been initiated under the Service's internal candidate assessment process.

On September 21, 1994, the Service received a petition dated September 19, 1994, from Mr. D.C. ''Jasper'' Carlton, Director of the Biodiversity Legal Foundation, to emergency list the Amargosa toad (*Bufo nelsoni*) as endangered under the Endangered Species Act of 1973, as amended (Act).

The petitioner states that the Amargosa toad qualifies for emergency listing as endangered under the Act due to present and threatened destruction, modification, or curtailment of habitat or range; overuse of habitat for commercial, recreational, scientific, or educational purposes; other natural or man-made factors affecting its continued existence; severely restricted range; and inadequacy of existing regulatory mechanisms. The Amargosa toad is endemic to the Oasis Valley, Nye County, Nevada, in an approximately 9-mile stretch of the Amargosa River and nearby springs from Springdale to the Narrows south of Beatty. The petition noted that Hoff (1994) asserts that off-road vehicles, water diversions, grazing, and non-native predators have caused this species to decline from the thousands reported in 1958 to only 30 adult and juvenile toads observed in 1994 in Oasis Valley.

The Service included the Amargosa toad as a category 2 species in the August 2, 1977, Animal Notice of Review (42 FR 39121). It was subsequently categorized as a category 1 species in the December 30, 1982, Notice of Review (47 FR 58454) and again as a category 2 species in the September 18, 1985, Notice of Review (50 FR 37960). On November 14, 1994, the Service changed its classification back to category 1, with a listing priority of 2 (59 FR 58982). Assignment of the Amargosa toad to category 1 means that this is a taxa for which the Service has on file sufficient information on biological vulnerability and threats to support a proposal to list the taxa as an endangered or threatened species.

The Service finds that substantial information has been presented indicating that listing of the Amargosa toad may be warranted. However, emergency listing is not warranted at this time because an immediate threat of extinction does not exist. Several actions (e.g., fencing and removing introduced crayfish from Lower Indian springs, and removing catfish from Harlan/Keel Spring, etc.) aimed at conserving this species are ongoing. This decision is based on scientific and commercial information contained in the petition, provided as attachments to the petition, and otherwise available to the Service. The Service requests any additional data, comments, and suggestions from the public, other concerned governmental agencies, the scientific community, industry, or any other interested parties concerning the status of the Amargosa toad. Of particular interest is information on the Amargosa toad regarding—(1) The existence and status of additional populations, (2) environmental factors determining its distribution, (3) life history information, and (4) existing conservation efforts.

References Cited

A complete list of all references cited herein is available upon request from the Reno Field Office (see **ADDRESSES** section).

Authors

The primary authors of this document are Dr. Patricia G. Zenone and Sheryl L. Barrett of the Reno Field Office (see **ADDRESSES** above).

Authority

The authority for this action is the Endangered Species Act of 1973 as amended (16 U.S. C. 1531 *et seq.*).

Dated: March 17, 1995.

Mollie H. Beattie,

Director, Fish and Wildlife Service.

[FR Doc. 95–7204 Filed 3–22–95; 8:45 am]

BILLING CODE 4310–55–P

---

50 CFR Part 17

RIN 1018–AC48

Endangered and Threatened Wildlife and Plants; Reopening of Comment Period on Proposed Rule to Reclassify the Bald Eagle From Endangered to Threatened

AGENCY: Fish and Wildlife Service, Interior.

ACTION: Proposed rule; reopening of comment period.

SUMMARY: The U.S. Fish and Wildlife Service (Service) is reopening the comment period on the bald eagle reclassification proposal for thirty days. On July 12, 1994, the Service proposed reclassifying the bald eagles of the lower 48 States as threatened, except those already listed as threatened and those of the Southwestern Recovery Region and Mexico. The bald eagles of the Southwestern Recovery Region were proposed to remain listed as

endangered. The Service also proposed classifying bald eagles in Mexico as endangered; they are not currently listed as endangered or threatened. Specific public comment was solicited on the status of bald eagles in the Southwest and Mexico and the distinctness of those eagles as a separate population. New information indicates that the Southwestern and Mexican bald eagles may not warrant a classification as endangered. The Service is making available for public review and comment information recently received about bald eagles of the Southwestern Recovery Region.

DATES: The comment period on the proposal is reopened, effective immediately, and will close on April 24, 1995.

ADDRESSES: Interested parties may obtain copies of the comments and other information listed below from the Chief, Division of Endangered Species, U.S. Fish and Wildlife Service, Bishop Henry Whipple Federal Building, 1 Federal Drive, Ft. Snelling, Minnesota 55111–4056 (612/725–3536; fax 612/725–3526). Copies may also be obtained from the State Supervisor, Arizona Ecological Services State Office, 2321 W. Royal Palm Road, Phoenix, Arizona 85021 (602/640–2720; fax 602/640–2730).

Send written comments and other materials to the above Ft. Snelling, Minnesota, Regional Office address. Comments and materials received will be available for public inspection during normal business hours, by appointment, at that address.

FOR FURTHER INFORMATION CONTACT: Jody Gustitus Millar, Bald Eagle Recovery Coordinator, Fish and Wildlife Service, 4469–48th Avenue Court, Rock Island, Illinois 61201 (309/793–5800; fax 309/793–5804).

SUPPLEMENTARY INFORMATION:

Background

The bald eagle (*Haliaeetus leucocephalus*) is listed as endangered under the Endangered Species Act of 1973, as amended (Act), in the lower 48 States except Washington, Oregon, Minnesota, Wisconsin, and Michigan, where it is listed as threatened. The bald eagle also occurs in Alaska and Canada, where it is not at risk and is not protected under the Act; and in small numbers in northern Mexico. The Service proposed in the July 12, 1994, **Federal Register** notice (59 FR 35584) to reclassify the bald eagle from endangered to threatened in the lower 48 States except in certain portions of the American Southwest and to classify bald eagles in Mexico as endangered. That notice also stated that comments and other information received by the Service may lead to a final regulation that differs from the original proposal, including the possible complete reclassification to threatened status for all bald eagles south of Canada.

The Service has received significant new information regarding Southwestern bald eagles and has re-examined other information. Existing information at the time of the proposed rule fails to identify any unique genetic characteristics possessed by the Southwestern bald eagles. New information indicates that the bald eagles of the Southwestern Recovery Region and Mexico are not likely to be reproductively isolated. Evidence of recruitment has recently been found from the Southeastern Recovery Region into the Southwestern Recovery Region and Mexico. Unique threats to Southwestern bald eagles remain, but their significance is diminished in light of immigration into the population segment.

The Service is now considering reclassifying the eagles of the Southwestern Recovery Region as threatened, and classifying the bald eagles of Mexico as threatened. The bald eagle would remain threatened in the five States where it is currently listed as threatened. This modified action, if finalized, would not alter those conservation measures already in force to protect the species and its habitats.

The **Federal Register** notice announcing the proposed rule opened a public comment period that ended on October 11, 1994; the deadline for receipt of public hearing requests was August 26, 1994. Public hearings were subsequently held, and the comment period was extended in a September 30, 1994 notice (59 FR 49908) to accommodate them. The extended comment period closed November 9, 1994. This notice reopens the comment period for 30 days to allow interested parties to obtain copies of the following documents and to submit additional comments on the proposed rule.

References

Driscoll, D.E., R.I. Mesta and J.T. Driscoll. 1993. Population ecology and demography of bald eagles in Arizona: 1991–1993. American Eagle Research Institute, Mesa, Arizona 74pp.

Driscoll, Dan (American Eagle Research Institute) 1995. Letter to U.S. Fish and Wildlife Service, Phoenix, Arizona.

Driscoll, Dan (American Eagle Research Institute) 1995. Letter to U.S. Fish and Wildlife Service, Rock Island, Illinois.

Mabie, D.W., M.T. Merendino and D.H Reid. 1994. Dispersal of bald eagles fledged in Texas. Journal of Raptor Research 28(4):213–219.

Montoya, Bill (Director, New Mexico Department of Game & Fish). 1994. Letter to U.S. Fish and Wildlife Service.

Shroufe, Duane. (Director, Arizona Game & Fish Department). 1994. Letter to U.S. Fish and Wildlife Service.

Spiller, Sam. (State Supervisor, U.S. Fish and Wildlife Service, Phoenix, Arizona). 1994. Memo to U.S. Fish and Wildlife Service, Twin Cities, Minnesota.

Author

The primary author of this notice is Jody Gustitus Millar, Bald Eagle Recovery Coordinator, Fish and Wildlife Service, 4469–48th Avenue Court, Rock Island, Illinois 61201.

Authority

The authority for this action is the Endangered Species Act of 1973 (16 U.S.C. 1531 *et seq.*).

Dated: March 15, 1995.

Mollie H. Beattie,

Director, Fish and Wildlife Service.

[FR Doc. 95–7205 Filed 3–22–95; 8:45 am]

BILLING CODE 4310–55–P

---

50 CFR Part 17

Endangered and Threatened Wildlife and Plants; 12-Month Finding for a Petition to List the Southern Rocky Mountain Population of the Boreal Toad as Endangered

AGENCY: Fish and Wildlife Service, Interior.

ACTION: Notice of 12-month petition finding.

SUMMARY: The U.S. Fish and Wildlife Service (Service) announces a 12-month finding for a petition to list the southern Rocky Mountain population of the boreal toad (*Bufo boreas boreas*) under the Endangered Species Act of 1973, as amended. After review of all available scientific and commercial information, the Service finds that listing this species is warranted but precluded by other higher priority actions to amend the Lists of Endangered and Threatened Wildlife and Plants.

DATES: The finding announced in this document was made on March 15, 1995. Comments, questions, or information regarding status and threats to the boreal toad may be submitted until further notice.

ADDRESSES: Comments, questions, or information concerning this finding may be submitted to the Assistant Field Supervisor, U.S. Fish and Wildlife Service, 764 Horizon Drive, South Annex A, Grand Junction, Colorado 81506–3946. The petition, finding, and supporting documents are available for public inspection, by appointment,

during normal business hours at the above address.

FOR FURTHER INFORMATION CONTACT: Terry Ireland (see **ADDRESSES** above) at telephone (303) 243–2778.

SUPPLEMENTARY INFORMATION:

Background

Section 4(b)(3)(B) of the Endangered Species Act (Act) of 1973, as amended (16 U.S.C. 1531 *et seq.*), requires that, for any petition to revise the Lists of Endangered and Threatened Wildlife and Plants that contains substantial scientific and commercial information, the Fish and Wildlife Service (Service) make a finding within 12 months of the date of the receipt of the petition on whether the petitioned action is (a) not warranted, (b) warranted, or (c) warranted but precluded from immediate proposal by other pending proposals of higher priority. Notice of such 12-month findings are to be published promptly in the **Federal Register**. This notice meets the latter requirement for the Service's 12-month administrative finding regarding the petition discussed below. Information contained in this notice is a summary of the information in the 12-month finding, which is the Service's decision document.

On September 30, 1993, the Service received a petition dated September 27, 1993, from the Biodiversity Legal Foundation located in Boulder, Colorado, and Dr. Peter Hovingh, a professor at the University of Utah. The petition requested that the southern Rocky Mountain population of the ''western boreal toad'' (*Bufo boreas boreas*) be listed as endangered and that critical habitat be designated. A 90-day finding announced in the **Federal Register** on July 22, 1994 (59 FR 37439), indicated that the petition presented substantial information indicating that the requested action may be warranted.

The finding also announced a public comment period extending to September 20, 1994. Forty-three comment letters were received. Two commenters provided scientific information on status, threats, and genetics of the boreal toad and concluded that listing was warranted. A third commenter provided a hypothesis for boreal toad declines. The other 40 letters opposed Federal listing and 9 provided information on status or regulatory protection afforded to the southern Rocky Mountain population of the boreal toad. Several residents of the Laramie, Wyoming, area were concerned about restriction of mosquito spraying. The Service does not believe that mosquito spraying in Laramie contributed to declines of the boreal toad because Laramie lies below 2,300 meters (7,500 feet) which is the lower elevational range inhabited by the boreal toad.

Boreal toads were once common throughout much of the high elevations in Colorado (Burger and Bragg 1946, Smith et al. 1965, Hammerson 1989) and in the Sierra Madre, Medicine Bow, and southern Laramie Mountains of southeast Wyoming (Baxter and Stone 1985). Boreal toads were found at only three localities at the southern periphery of their range in the San Juan Mountains of New Mexico: Lagunitas, Canjilon and Trout Lakes (Campbell and Degenhardt 1971, Jones 1978, New Mexico Department of Game and Fish 1988). Altitudinal distribution ranges from 2,300 meters (7,500 feet) Baxter 1952) to approximately 3,700 meters (12,000 feet) (C. Pague, Colorado Natural Heritage Program, *in litt.* 1994).

Declines in boreal toad demes (a small group or population of organisms that interbreed) were first documented in New Mexico in 1984 (Woodward and Mitchell 1985), in Colorado in 1974 (Carey 1993), and in southern Wyoming in 1986 (Corn et al. 1989). Boreal toads are now extirpated from the three known historic sites in New Mexico (Stuart and Painter 1994). Corn et al. (1989) found that boreal toads were absent from 83 percent of locations in Colorado and Wyoming previously known to contain toads. Recent surveys revealed several previously unknown locations and extant historical locations of nonbreeding individuals and several breeding sites; but survey data indicated that boreal toads are absent from approximately 96 percent of localities that contained known historical records of suitable habitat.

Physical and climatic conditions separate the southern Rocky Mountain population of the boreal toad from populations in western Wyoming and northeastern Utah. Because of this geographic isolation, the Service believes that the southern Rocky Mountain population of the boreal toad can be listed as a distinct vertebrate population segment under the Act.

Summary of Factors Affecting the Species

The following information is a summary and discussion of the five factors or listing criteria as set forth in section 4(a)(1) of the Endangered Species Act (Act), as amended (16 U.S.C. 1531 *et seq.*), and regulations (50 CFR part 424) promulgated to implement the listing provisions of the Act and their applicability to the current status of the southern Rocky Mountain population of the boreal toad.

A. *The present or threatened destruction, modification, or curtailment of its habitat or range.* The southern Rocky Mountain population of the boreal toad is found primarily on public land within State forests, national forests, and lands administered by the Bureau of Reclamation, Bureau of Land Management, and National Park Service. The use of these lands ranges from recreational to intensive timber and grazing management and watershed alteration activities. Activities that destroy, modify, or curtail habitat are likely to contribute to the continued decline in toad numbers; however, the Service does not believe that recreational or habitat management activities brought about rangewide decline of the southern Rocky Mountain population of the boreal toad.

B. *Overutilization for commercial, recreational, scientific, or educational purposes.* The boreal toad has no commercial value and any recreational values are low and nonconsumptive. Scientific and educational collecting is not thought to have been widespread over the past decade. Overutilization is not currently thought to contribute to declines in the southern Rocky Mountain population of the boreal toad.

C. *Diseases or predation.* Carey (1987, 1993) indicated that the proximate cause of the widespread decline of boreal toads in northern New Mexico and west-central Colorado was a result of infection by *Aeromonas hydrophila* bacteria (red-leg disease). However, *A. hydrophila* is common in the microfauna carried by amphibians, and it does not cause infection or death in healthy individuals. As a result, toads likely were stressed by adverse environmental factors, such as acid rain, pollution, or increased ultraviolet radiation, and later succumbed to *A. hydrophila* infection (Carey 1987). Competition and predation by native and nonnative species occurs but is probably a minor impact.

D. *The inadequacy of existing regulatory mechanisms.* The boreal toad is listed as endangered by Colorado and New Mexico and is a nongame animal in Wyoming. The Colorado Division of Wildlife has formed a recovery team and is in the final stages of preparing a State recovery plan (Tom Nesler, Colorado Division of Wildlife, pers. comm. 1994). In 1993 the Colorado Division of Wildlife entered into a cooperative agreement with the Service for research on the boreal toad and has also initiated a conservation agreement with a private mining company whose land contains boreal toad breeding sites.

A conservation agreement will be developed for the southern Rocky Mountain population of the boreal toad between the Service, Forest Service, National Park Service, Bureau of Land Management, National Biological Survey, Colorado Division of Wildlife, and perhaps other agencies. The agreement will serve as a commitment by the various agencies to work toward recovery of the southern Rocky Mountain population of the boreal toad. A cooperatively formulated conservation strategy that complements the Colorado Division of Wildlife's recovery plan and that implements the conservation agreement has been recommended by the Forest Service (Elizabeth Estill, U.S. Forest Service, *in litt.* 1994).

A sensitive species policy has been developed under the National Forest Management Act (16 U.S.C. 1600 *et seq.*) which directs the U.S. Forest Service to manage for sensitive or candidate species such as the boreal toad. In 1988, policies were developed by both the National Park Service and the Bureau of Land Management to conserve federally listed or rare species, thus ensuring that their actions do not impact boreal toads. Other Federal resource laws that may provide protection for the boreal toad are the Fish and Wildlife Coordination Act (16 U.S.C. 661 *et seq.*), Clean Water Act (33 U.S.C. 1344 *et seq.*) and Clean Air Act (42 U.S.C. 1857 *et seq.*).

E. *Other natural or manmade factors affecting its continued existence.* Factors, such as acid rain, pollution, and increased ultraviolet radiation, may be causing declines of the southern Rocky Mountain population of the boreal toad. The extent of natural population fluctuation remains unknown and may be working synergistically with other environmental or anthropogenic factors to cause declines in toad populations. Fishery management activities also may cause decline or extirpation in localized areas.

Finding

The service has reviewed the petition, the literature cited in the petition, other available literature and information, comments received following the 90-day finding, and consulted with biologists and researchers familiar with the boreal toad. On the basis of the best scientific and commercial information available, which is discussed above under the five listing factors, the Service finds the petitioned action is warranted but precluded by work on other species having higher priority for listing.

Section 4(b)(3)(B)(iii) of the Act states that the Service may make a warranted but precluded finding if it can demonstrate that (1) an immediate proposed rule is precluded by other pending proposals, and that (2) expeditious progress is being made on other listing actions. Expeditious progress in listing endangered and threatened species is being made and is reported annually in the **Federal Register**. Furthermore, on September 21, 1983 (48 FR 43098), the Service published in the **Federal Register** its system for prioritizing species for listing. The system considers magnitude of threat, immediacy of threat, and taxonomic distinctiveness in assigning species numerical listing priorities on a scale of 1 to 12. The southern Rocky Mountain population of the boreal toad is assigned a listing priority of 3 because noted declines exist throughout its range (magnitude is high), as far as can be determined the threat(s) still exists (it is imminent), and for taxonomic purposes populations are treated as subspecies.

Although a priority 3 is a relatively high listing priority, there are three candidate species in Colorado that appear to be more in need of listing, thus precluding the listing of the southern Rocky Mountain population of the boreal toad at this time. One candidate is the mountain plover (*Charadrius montanus*) for which the Service is preparing a proposed rule. The Service regards the magnitude and immediacy of threat to the mountain plover to be at the same level as they are for the boreal toad; however, the mountain plover is a full species and is being considered for listing throughout its range, resulting in a higher listing priority of 2. The Service has been petitioned to list the Preble's meadow jumping mouse (*Zapus hudsonius preblei*). If a warranted finding is made, the listing priority for the mouse will likely be 3, the same as the boreal toad; however, the mouse's entire range is being considered for listing, not just a portion, and there are fewer individual mice than boreal toads. A plant, *Phacelia submutica* (DeBeque phacelia), also has a higher listing priority (2) than the boreal toad. Consequently, listing of the boreal toad will follow listing of the other three species unless it is determined that listing one or more of those species is not warranted or that listing the boreal toad is not warranted.

The petitioners requested that critical habitat be designated for the southern Rocky Mountain population of the boreal toad. Designation of critical habitat is not petitionable under the Act; however, critical habitat will be proposed at the time the population is proposed for listing unless it is not determinable or not prudent.

As required by section 4(b)(3)(C)(i) of the Act, the Service will reassess the warranted but precluded finding after 1 year.

The Service's 12-month finding contains more detailed information regarding the above decisions. A copy may be obtained from the Western Colorado Office (see **ADDRESSES** section).

Reference Cited

A complete list of all references cited is available upon request from the Western Colorado Office (see **ADDRESSES** section).

Author: The primary author of this document is Terry Ireland, Western Colorado Office (see **ADDRESSES** section).

Authority: The authority for this action is the Endangered Species Act of 1973, as amended (16 U.S.C. 1531–1544).

Dated: March 15, 1995.

Mollie H. Beattie,

Director, Fish and Wildlife Service.

[FR Doc. 95–7203 Filed 3–22–95; 8:45 am]

BILLING CODE 4310–55–M

Notices

Federal Register
Vol. 60, No. 56
Thursday, March 23, 1995

This section of the FEDERAL REGISTER contains documents other than rules or proposed rules that are applicable to the public. Notices of hearings and investigations, committee meetings, agency decisions and rulings, delegations of authority, filing of petitions and applications and agency statements of organization and functions are examples of documents appearing in this section.

DEPARTMENT OF AGRICULTURE

Animal and Plant Health Inspection Service

[Docket No. 95–015–1]

Determination of Nonregulated Status for Additional Calgene, Inc., Genetically Engineered FLAVR SAVR™ Tomato Lines

AGENCY: Animal and Plant Health Inspection Service, USDA.

ACTION: Notice.

SUMMARY: The Animal and Plant Health Inspection Service is announcing that it has added 20 additional genetically engineered tomato lines to those subject to its October 19, 1992, interpretive ruling that the subject FLAVR SAVR™ lines need no longer be regulated. The effect of this action is that 20 additional delayed softening tomato lines, which have been modified by the incorporation of genetic material described by Calgene, Inc., in its initial request for an interpretive ruling, will no longer be subject to regulation under 7 CFR part 340.

FOR FURTHER INFORMATION CONTACT: Dr. Keith Reding, Biotechnologist, Animal and Plant Health Inspection Service, Biotechnology, Biologics, and Environmental Protection, Biotechnology Permits, 4700 River Road Unit 147, Riverdale, MD 20737–1228; (301) 734–7612.

SUPPLEMENTARY INFORMATION: On October 19, 1992, the Animal and Plant Health Inspection Service (APHIS) published in the **Federal Register** (57 FR 47608–47616, Docket No. 92–087–2) a notice announcing the issuance of an interpretive ruling that the Calgene, Inc., FLAVR SAVR™ tomato does not present a plant pest risk and is not a regulated article under the regulations contained in 7 CFR part 340. This action was in response to a petition submitted by Calgene seeking a determination from APHIS that its FLAVR SAVR™ tomato no longer be deemed a regulated article, based on an absence of plant pest risk. The effect of the action was that previously field tested lines of the FLAVR SAVR™ tomato and their progeny would no longer be regulated under these regulations.

FLAVR SAVR™ tomatoes were defined by Calgene in its initial petition to include any tomatoes transformed with one of seven identified plasmid vectors that all carry an antisense copy of the tomato polygalacturonase gene and a bacterial neomycin phosphotransferase gene with associated regulatory sequences. Calgene's initial request to APHIS in 1992 was for a determination pertaining to all FLAVR SAVR™ transformants produced in tomatoes using any one of the seven plasmid vectors. Calgene indicated in its petition that data provided to the Agency were representative of the data gathered for all lines tested up to that time. The initial determination announced by APHIS on October 19, 1992, only applied to those lines that had already been field tested. However, APHIS indicated that new lines were likely to exhibit properties similar to those of lines already field tested under permit. The determination also allowed for cross-breeding of the identified FLAVR SAVR™ tomato lines with any other lines or cultivars of tomato without a permit. One additional FLAVR SAVR™ tomato line was added to the original determination on October 3, 1994 (59 FR 50220, Docket No. 94–096–1), and nine additional FLAVR SAVR™ tomato lines were added to the original determination on November 18, 1994 (59 FR 59746, Docket No. 94–125–1).

Seventeen of the 20 additional FLAVR SAVR™—tomato lines that are the subject of this notice were constructed using the plasmid vector pCGN4109, and the remaining three lines were constructed using the plasmid vector pCGN1436. These two vectors were among the seven included in Calgene's initial petition to APHIS. In our determination of October 19, 1992, the lines using these vectors were not deregulated because they had not been field tested. These lines have since been field tested in accordance with APHIS regulations at 7 CFR part 340, and data provided to APHIS indicate that the new transformants, produced in a manner identical to the earlier transformant lines, behave similarly to those earlier FLAVR SAVR™ tomato lines to which the determination initially applied. Reports from field trials and other data indicate that the new tomato lines grow normally, exhibit the expected morphological, reproductive, and physiological properties, and do not have unexpected pest or disease susceptibility or symptoms. Therefore, the APHIS determination of nonregulated status of October 19, 1992, applies as well to the new transformed lines.

Done in Washington, DC, this 16th day of March 1995.

Terry L. Medley,

Acting Administrator, Animal and Plant Health Inspection Service.

[FR Doc. 95–7132 Filed 3–22–95; 8:45 am]

BILLING CODE 3410–34–P

Forest Service

Southwest Oregon Provincial Interagency Executive Committee (PIEC), Advisory Committee

AGENCY: Forest Service, USDA.

ACTION: Notice of meeting.

SUMMARY: The Southwest Oregon PIEC Advisory Committee will meet on April 20, 1995 at the Medford Bureau of Land Management Office, 3040 Biddle Road, Medford, Oregon. The meeting will begin at 9:30 a.m. and continue until 4:00 p.m. Agenda items to be covered include: (1) Context of the Advisory Committee; including background on the President's Forest Plan; (2) Introduction of members and orientation; (3) Meeting operating guidelines; (4) Mission and purpose of the Province Advisory Committee and its relationship to the PIEC; (5) Brief presentation by Advisory Committee members on who they represent; and (6) Open public forum. All Southwest Oregon Province Advisory Committee meetings are open to the public. Interested citizens are encouraged to attend.

FOR FURTHER INFORMATION CONTACT: Direct questions regarding this meeting to Chuck Anderson, Province Advisory Committee staff, USDA, Rogue River National Forest, P.O. Box 520, Medford, Oregon 97501, 503–858–2322.

Dated: March 17, 1995.

James T. Gladen,

Forest Supervisor.

[FR Doc. 95–7211 Filed 3–22–95; 8:45 am]

BILLING CODE 3410–11–M

Forms Under Review by Office of Management and Budget

March 17, 1995.

The Department of Agriculture has submitted to OMB for review the following proposal for the collection of information under the provisions of the Paperwork Reduction Act (44 U.S.C. Chapter 35) since the last list was published. This list is grouped into new proposals, revisions, extension, or reinstatements. Each entry contains the following information:

(1) Agency proposing the information collection; (2) Title the information collection; (3) Form number(s), if applicable; (4) Who will be required or asked to report; (5) An estimate of the number of responses; (6) An estimate of the total number of hours needed to provide the information; (7) Name and telephone number of the agency contact person.

Questions about the items in the listing should be directed to the agency person named at the end of each entry. Copies of the proposed forms and supporting documents may be obtained from: Department Clearance Officer, USDA, OIRM, Room 404–W Admin. Bldg., Washington, DC 20250, (202) 690–2118.

Revision

- Rural Utilities Service

RUS Electric Loan Application and Related Reporting Burdens

RUS forms 740C, 740G, 7, 12, 325a–k, 341, 345, 726, 7a

Individuals or households; Business or other for-profit; Not-for-profit institutions; 3,447 responses; 120,268 hours

Sue Arnold, (202) 690–1078

- National Agricultural Statistics Service

Agricultural Prices

Business or other for-profit; Farms; 81,170 responses; 13,918 hours

Larry Gambrell, (202) 720–5778

Extension

- Food and Consumer Service

7 CFR Part 235–State Administrative Expense Funds

FNS–74, FNS–525

State, Local or Tribal Government; 100,036 responses; 34,461 hours

Angella Love, (703) 305–2607

New Collection

- Food and Consumer Service

Evaluation of Retailer Compliance Management Demonstrations In EBT–Ready States and Related Initiatives/ Evaluation of Agreements With State Law Enforcement Bureaus (SLEB)

State, Local or Tribal Government; 31 responses; 104 hours

Ken Offerman, (703) 305–2124.

Larry K. Roberson,

Deputy Departmental Clearance Officer.

[FR Doc. 95–7104 Filed 3–22–95; 8:45 am]

BILLING CODE 3410–01–M

DEPARTMENT OF COMMERCE

Bureau of Export Administration

Action Affecting Export Privileges; Joseph Jeno Nandory

Order

The Office of Export Enforcement, Bureau of Export Administration, United States Department of Commerce (Department), having notified Joseph Jeno Nandory (Nandory) of its intention to initiate an administrative proceeding against him pursuant to Part 788 of the Export Administration Regulations (currently codified at 15 CFR Parts 768–799 (1994)) (the Regulations), issued pursuant to the Export Administration Act of 1979, as amended (50 U.S.C.A. app. §§ 2401–2420 (1991, Supp. 1993, and Pub. L. No. 103–277, July 5, 1994)) (the Act),[1] based on allegations that, Nandory, on or about December 6, 1989, in violation of Section 787.3(a) of the Regulations, attempted to export U.S.-origin computer-related equipment from the United States to Hungary, without obtaining from the Department the validated export license required by Section 772.1(b) of the Regulations;

The Department and Nandory having entered into a Consent Agreement whereby the Department and Nandory have agreed to settle this matter in accordance with the terms and conditions set forth therein, and the terms of the Consent Agreement having been approved by me;

It is therefore ordered,

First, that Joseph Jeno Nandory, shall, for a period of five years from the date of entry of this Order, be denied all privileges of participating, directly or indirectly, in any manner or capacity, in any transaction in the United States or abroad involving any commodity or technical data exported or to be exported from the United States and subject to the Regulations.

A. All outstanding individual validated export licenses in which Nandory appears or participates, in any manner or capacity, are hereby revoked and shall be returned forthwith to the Office of Exporter Services for cancellation. Further, all of Nandory's privileges of participating, in any manner or capacity, in any special licensing procedure, including, but not limited to, distribution licenses, are hereby revoked.

B. Without limiting the generality of the foregoing, participation, either in the United States or abroad, shall include participation, directly or indirectly, in any manner or capacity: (i) as a party or as a representative of a party to any export license application submitted to the Department; (ii) in preparing or filing with the Department any export license application or request for reexport authorization, or any document to be submitted therewith; (iii) in obtaining from the Department or using any validated or general export license, reexport authorization, or other export control document; (iv) in carrying on negotiations with respect to, or in receiving, ordering, buying, selling, delivering, storing, using, or disposing of, in whole or in part, any commodities or technical data exported or to be exported from the United States and subject to the Regulations; and (v) in financing, forwarding, transporting, or other servicing of such commodities or technical data.

C. After notice and opportunity for comment as provided in Section 788.3(c) of the Regulations, any person, firm, corporation, or business organization related to Nandory by affiliation, ownership, control, or position of responsibility in the conduct of trade or related services may also be subject to the provisions of this Order.

D. As provided by Section 787.12(a) of the Regulations, without prior disclosure of the facts to and specific authorization of the Office of Exporter Services, in consultation with the Office of Export Enforcement, no person may directly or indirectly, in any manner or capacity: (i) apply for, obtain, or use any license, Shipper's Export Declaration, bill of lading, or other export control document relating to an export or reexport of commodities or technical data by, to, or for another person then subject to an order revoking or denying his export privileges or then excluded from practice before the Bureau of Export Administration; or (ii) order, buy, receive, use, sell, deliver, store, dispose of, forward, transport, finance, or otherwise service or participate: (a) in any transaction which may involve any commodity or technical data exported

[1] The Act expired on August 20, 1994. Executive Order 12924 (59 *Fed. Reg.* 43437, August 23, 1994) continued the Regulations in effect under the International Emergency Economic Powers Act (50 U.S.C.A. §§ 1701–1706 (1991)).

or to be exported from the United States; (b) in any reexport thereof; or (c) in any other transaction which is subject to the Regulations, if the person denied export privileges may obtain any benefit or have any interest in, directly or indirectly, any of these transactions.

Second, that the proposed Charging Letter, the Consent Agreement and this Order shall be made available to the public, and this Order shall be published in the **Federal Register**.

Entered this 14th day of March 1995.

This Order is effective immediately.

Frank W. Deliberti,

Acting Assistant Secretary for Export Enforcement.

[FR Doc. 95–7091 Filed 3–22–95; 8:45 am]

BILLING CODE 3510–PT–M

DEPARTMENT OF DEFENSE

Department of the Air Force

Intent to Grant a Limited Exclusive Patent License

Pursuant to the provisions of Part 404 of Title 37, Code of Federal Regulations, which implements Public Law 96–517, the Department of the Air Force announces its intention to grant Advanced Optical Equipment & Systems Corporations, a corporation of the State of New Mexico, a limited exclusive license under: United States Patent No. 5,008,593 filed in the name of L.A. Schlie for ''Coaxial Liquid Cooling of High Power Microwave Excited Plasma UV Lamps''; United States Patent No. 5,055,741 filed in the name of L.A. Schlie for ''Liquid Coolant for High Power Microwave Excited Plasma Tubes''; United States Patent No. 5,301,203 filed in the names of L.A. Schlie and R.D. Rathge for a ''Scalable and Stable, CW Photolytic Atomic Iodine Laser''; United States Patent No. 5,235,251 filed in the name of L.A. Schlie for ''Hydraulic Fluid Cooling of High Power Microwave Plasma Tubes''; U.S. Patent Application Serial No. 08/157,848 filed in the names of L.A. Schlie and R.D. Rathge for ''Turbo-Molecular Blower''; U.S. Patent Application Serial No. 07/949,615 filed in the names of L.A. Schlie and R.D. Rathge for a ''Repetitively Pulsed, Closed Cycle Photolytic Atomic Iodine Laser''; and U.S. Patent Application Serial No. 08/282,842 filed in the names of L.A. Schlie and R.D. Rathge for a ''Compact, Burst Mode, Pulsed, High Energy Blowdown Flow Photolytic Atomic Iodine Laser.

The license described above will be granted unless an objection thereto, together with a request for an opportunity to be heard, if desired, is received in writing by the addressee set forth below within sixty (60) days from the date of publication of this Notice. Copies of the patents and patent applications may be obtained, on request, from the same addressee.

All communications concerning this Notice should be sent to: Mr. Samuel B. Smith, Jr., Chief, Intellectual Property Branch, Commercial Litigation Division, Air Force Legal Services Agency, 1501 Wilson Blvd., Suite 805, Arlington, VA 22209–2403, Telephone No. (703) 696–9050.

Patsy J. Conner,

Air Force Federal Register Liaison Officer.

[FR Doc. 95–7092 Filed 3–22–95; 8:45 am]

BILLING CODE 3910–01–M

Department of the Army

Army Science Board; Notice of Closed Meeting

In accordance with Section 10(a)(2) of the Federal Advisory Committee Act (P.L. 92–463), announcement is made of the following Committee Meeting:

Name of Committee: Army Science Board (ASB).

Date of Meeting: 27 & 28 April 1995.

Time of Meeting: 0900–1600, 27 April 1995. 0900–1500, 28 April 1995.

Place: Pentagon—Washington, DC.

Agenda: The Army Science Board's 1994 Summer Study on ''Technical Architecture C4I'' will meet for discussions on ASB business. These meetings will be closed to the public in accordance with Section 552b(c) of Title 5, U.S.C., specifically subparagraph (4) thereof, and Title 5, U.S.C., Appendix 2, subsection 10(d). The proprietary matters to be discussed are so inextricably intertwined so as to preclude opening any portion of these meetings. The ASB Administration Officer, Sally Warner, may be contacted for further information at (703) 695–0781.

Sally A. Warner,

Administrative Officer, Army Science Board.

[FR Doc. 95–7089 Filed 3–22–95; 8:45 am]

BILLING CODE 3710–08–M

Army Science Board; Notice of Open Meeting

In accordance with Section 10(a)(2) of the Federal Advisory Committee Act (P.L. 92–463), announcement is made of the following Committee Meeting:

Name of Committee: Army Science Board (ASB).

Date of Meeting: 25 April 1995.

Time of Meeting: 0800–1200.

Place: Fort Huachuca, AZ.

Agenda: The Army Science Board's (ASB) Battle Lab Issue Group and the Summer Study on ''Technology Transfer from the Technology Base to the Customer'' will visit three Training and Doctrine Command (TRADOC) Battle Labs. This meeting will be open to the public. Any interested person may attend, appear before, or file statements with the committee at the time and in the manner permitted by the committee. The ASB Administrative Officer, Sally Warner, may be contacted for further information at (703) 695–0781.

Sally A. Warner,

Administrative Officer, Army Science Board.

[FR Doc. 95–7140 Filed 3–22–95; 8:45 am]

BILLING CODE 3710–08–M

Army Science Board; Notice of Open Meeting

In accordance with Section 10(a)(2) of the Federal Advisory Committee Act (P.L. 92–463), announcement is made of the following Committee Meeting:

Name of Committee: Army Science Board (ASB).

Date of Meeting: 5 May 1995.

Time of Meeting: 0800–1200.

Place: Fort Benning, GA.

Agenda: The Army Science Board's (ASB) Battle Lab Issue Group and the Summer Study on ''Technology Transfer from the Technology Base to the Customer'' will visit three Training and Doctrine Command (TRADOC) Battle Labs. This meeting will be open to the public. Any interested person may attend, appear before, or file statements with the committee at the time and in the manner permitted by the committee. The ASB Administrative Officer, Sally Warner, may be contacted for further information at (703) 695–0781.

Sally A. Warner,

Administrative Officer, Army Science Board.

[FR Doc. 95–7141 Filed 3–22–95; 8:45 am]

BILLING CODE 3710–08–M

Army Science Board; Notice of Open Meeting

In accordance with Section 10(a)(2) of the Federal Advisory Committee Act (P.L. 92–463), announcement is made of the following Committee Meeting:

Name of Committee: Army Science Board (ASB).

Date of Meeting: 4 May 1995.

Time of Meeting: 0800–1200.

Place: Fort Gordon, GA.

Agenda: The Army Science Board's (ASB) Battle Lab Issue Group and the Summer Study on ''Technology Transfer from the Technology Base to the Customer'' will visit three Training and Doctrine Command (TRADOC) Battle Labs. This meeting will be open to the public. Any interested person may attend, appear before, or file statements with the committee at the time and in the manner permitted by the committee. The ASB Administrative Officer, Sally Warner,

may be contacted for further information at (703) 695–0781.

Sally A. Warner,

Administrative Officer, Army Science Board.

[FR Doc. 95–7142 Filed 3–22–95; 8:45 am]

BILLING CODE 3710–08–M

Army Science Board; Notice of Open Meeting

In accordance with Section 10(a)(2) of the Federal Advisory Committee Act (P.L. 92–463), announcement is made of the following Committee Meeting:

Name of Committee: Army Science Board (ASB).

Date of Meeting: 14 April. 1995.

Time of Meeting: 0800–1200.

Place: Fort Leavenworth, KS.

Agenda: The Army Science Board's (ASB) Battle Lab Issue Group and the Summer Study on ''Technology Transfer from the Technology base to the Customer'' will visit three Training and Doctrine Command (TRADOC) Battle Labs. This meeting will be open to the public. Any interested person may attend, appear before, or file statements with the committee at the time and in the manner permitted by the committee. The ASB Administrative Officer, Sally Warner, may be contacted for further information at (703) 695–0781.

Sally A. Warner,

Administrative Officer, Army Science Board.

[FR Doc. 95–7143 Filed 3–22–95; 8:45 am]

BILLING CODE 3710–08–M

Office of the Secretary

Department of Defense Wage Committee; Notice of Closed Meetings

Pursuant to the provisions of section 10 of Public Law 92–463, the Federal Advisory Committee Act, notice is hereby given that closed meetings of the Department of Defense Wage Committee will be held on April 4, 1995; April 11, 1995; April 18, 1995; and April 25, 1995, at 10:00 a.m. in Room 800, Hoffman Building #1, Alexandria, Virginia.

Under the provisions of 10(d) of Public Law 92–463, the Department of Defense has determined that the meetings meet the criteria to close meetings to the public because the matters to be considered are related to internal rules and practices of the Department of Defense and the detailed wage data considered were obtained from officials of private establishments with a guarantee that the data will be held in confidence.

However, members of the public who may wish to do so are invited to submit material in writing to the chairman concerning matters believed to be deserving of the Committee's attention.

Additional information concerning the meetings may be obtained by writing to the Chairman, Department of Defense Wage Committee, 4000 Defense Pentagon, Washington, DC 20301–4000.

Dated: March 17, 1995.

Patricia L. Toppings,

Alternate OSD Federal Register Liaison Officer, Department of Defense.

[FR Doc. 95–7083 Filed 3–22–95; 8:45 am]

BILLING CODE 5000–04–M

Defense Partnership Council Meeting

AGENCY: Department of Defense.

ACTION: Notice of meeting.

SUMMARY: The Department of Defense (DOD) announces a meeting of the Defense Partnership Council. Notice of this meeting is required under the Federal Advisory Committee Act. This meeting is open to the public. The topics to be covered are criteria for assessing successful partnerships and partnership successes within DOD.

DATES: The meeting is to be held Wednesday April 5, 1995, in room 1E801, Conference Room 4 the Pentagon from 1 p.m. until 3 p.m. Comments should be received by March 29, 1995, in order to be considered at the April 5 meeting.

ADDRESSES: We invite interested persons and organizations to submit written comments or recommendations. Mail or deliver your comments or recommendations to Mr. Kenneth Oprisko at the address shown below. Seating is limited and available on a first-come, first-served basis. Individuals wishing to attend who do not possess an appropriate Pentagon building pass should call the below listed telephone number to obtain instructions for entry into the Pentagon. Handicapped individuals wishing to attend should also call the below listed telephone number to obtain appropriate accommodations.

FOR FURTHER INFORMATION CONTACT:

Mr. Kenneth Oprisko, Chief, Labor Relations Branch, Field Advisory Services Division, Civilian Personnel Management Service, 2461 Eisenhower Ave., Hoffman Building #1, Suite 152, Alexandria, VA 22331–0900, (703) 325–1380.

Dated: March 17, 1995.

Patricia L. Toppings,

Alternate OSD Federal Register Liaison Officer, Department of Defense

[FR Doc. 95–7084 Filed 3–22–95; 8:45 am]

BILLING CODE 5000–04–M

Department of the Navy

Naval Research Advisory Committee; Closed Meeting

Pursuant to the provisions of the Federal Advisory Committee Act (5 U.S.C. App. 2), notice is hereby given that the Naval Research Advisory Committee will meet on April 10–14, 1995. The meeting will be held at the Commander in Chief, U.S. Pacific Fleet Headquarters, Pearl Harbor, Oahu, HI; Pacific Missile Range Facility, Kauai, HI; and Maui High Performance Computer Center and Haleakala Observatory, Maui, HI. The meeting will commence at 9 a.m. and terminate at 5 p.m. on April 10; commence at 8 a.m. and terminate at 5 p.m. on April 11; commence at 12 Noon and terminate at 5 p.m. on April 12; commence at 12:30 p.m. and terminate at 8 p.m. on April 13; and commence at 9 a.m. and terminate at 2:30 p.m. on April 14, 1995. All sessions of the meeting will be closed to the public.

The purpose of the meeting is to expose the Committee members to fleet operations and complexities in the Pacific Theater. The agenda will consist of briefings, discussions and demonstrations related to joint interoperability, forward presence, C^4I, quality of life, logistics, maintenance, training and tactics, theater air defense, cooperative engagement, reduced ship manning, system life cycle cost reduction, and relevant technology issues. These briefings, discussions, and demonstrations will contain classified information that is specifically authorized under criteria established by Executive order to be kept secret in the interest of national defense and are, in fact, properly classified pursuant to such Executive order. The classified and nonclassified matters to be discussed are so inextricably intertwined as to preclude opening any portion of the meeting.

Accordingly, the Secretary of the Navy has determined in writing that the public interest requires that all sessions of the meeting be closed to the public because they will be concerned with matters listed in section 552b(c)(1) of title 5, United States Code.

For further information concerning this meeting contact: Ms. Diane Mason-Muir, Office of Naval Research, Naval Research Advisory Committee, 800 North Quincy Street, Arlington, VA 22217–5660, Telephone Number: (703) 696–6769.

Dated: March 17, 1995.

L.R. McNees,

LCDR, JAGC, USN, Federal Register Liaison Officer.

[FR Doc. 95–7114 Filed 3–22–95; 8:45 am]

BILLING CODE 3810–FF–P

DEPARTMENT OF ENERGY

Deviation from the Department of Energy Assistance Regulations

AGENCY: Department of Energy.

ACTION: Notice of class deviation.

SUMMARY: The Department of Energy (DOE) hereby announces a class deviation from its Financial Assistance Regulations. This deviation removes, on a pilot basis for noncompetitive financial assistance awards of $1 million or less, the requirements to publish a **Federal Register** announcement prior to award and, then, to delay 14 calendar days before making the award. This deviation will save public funds and reduce paperwork by allowing smaller financial assistance actions to be awarded in a more timely fashion involving fewer DOE offices and employees.

EFFECTIVE DATE: April 7, 1995.

SUPPLEMENTARY INFORMATION: In this notice, the Department of Energy announces that, pursuant to 10 CFR 600.4, the Deputy Assistant Secretary for Procurement and Assistance Management has made a determination of the need for a class deviation to the Department's Financial Assistance Rules. A deviation to 10 CFR 600.7 has been approved which provides that, on a Department-wide two year pilot basis, noncompetitive financial assistance awards under $1 million are not required to be published in the **Federal Register** 14 calendar days prior to making an award. This deviation was approved to avoid the time consuming and labor intensive efforts involved in preparation and review of the announcements, and the 14 days of publication before award could be made for relatively low dollar value actions. Publication of these pending noncompetitive award announcements have not resulted in their intended purpose which was to make potentially qualified recipients aware of pending noncompetitive financial assistance awards so they might make their qualifications known to the awarding office, and possibly compete for the award. During the many years that the Department has published these announcements, only a very few responses have been received, and, of those, most had nothing to do with the noncompetitive nature of the awards. This deviation will result in streamlining the process of awarding noncompetitive financial assistance actions, thereby saving the Government resources of time and money. It is anticipated that, by the time the deviation expires, DOE will have completed a rulemaking to remove the publication requirement on a permanent basis.

FOR FURTHER INFORMATION CONTACT: Stephen D. Mournighan, Office of Management Review and Analysis, [HR–523], U.S. Department of Energy, 1000 Independence Avenue, SW, Washington, DC.

Issued in Washington, DC, on September 30, 1994.

Richard H. Hopf,

Deputy Assistant Secretary for Procurement and Assistance Management.

Editorial note: This document was received at the Office of the Federal Register on March 20, 1995.

[FR Doc. 95–7201 Filed 3–22–95; 8:45 am]

BILLING CODE 6450–01–P

Seattle Regional Support Office

Notice of Pacific Northwest and Alaska Regional Bioenergy Program

AGENCY: Department of Energy.

ACTION: Notice of Competitive Financial Assistance Applications Number DE–PS51–95R020563.

SUMMARY: The U.S. Department of Energy (DOE) Seattle Regional Support Office (SRSO) announces its intention to issue a competitive solicitation and make financial assistance awards for bioenergy-related demonstration, development and commercialization projects in support of the Pacific Northwest and Alaska Regional Bioenergy Program. This action is subject to the DOE Financial Assistance Rules (10 CFR Part 600).

DATES: The solicitation is anticipated to be released on or about March 17, 1995.

ADDRESSES: To obtain a copy of the solicitation, forward your request to the U.S. Department of Energy's Seattle Regional Support Office, 800 Fifth Avenue, Suite 3950, Seattle, WA 98104, Attn: Ms. Carol A. Curtis, Grants/Contracts Specialist. Only written requests for this solicitation will be honored. For convenience, requests for the solicitation may be faxed to Ms. Curtis at (206) 553–2200. Please reference solicitation DE–PS51–95R020563.

FOR FURTHER INFORMATION CONTACT: Carol Curtis, phone number 206–553–2166.

SUPPLEMENTARY INFORMATION:

The DOE established regional bioenergy programs to promote the development of effective uses of biomass for energy. The legislative authority (Senate Appropriation Bill) directs DOE to ''carry out activities related to technology transfer, industry support, resource assessment, and matching local resources to conversion technologies.'' The solicitation will be one approach used to carry out this directive. The DOE is seeking applications for projects that demonstrate bioenergy technologies which produce energy savings through displacement of non-renewable resources, or that produce energy through the direct combustion of renewable resources. Projects will also be evaluated on the ability of the proposed project to minimize environmental impacts and improve the economic viability of a specific bioenergy industry or technology. Projects shall be located in the region consisting of the states of: Washington, Oregon, Idaho, Alaska, and Montana. All project sponsors will be required to provide a minimum cost sharing of 1:1. Acceptable demonstration technologies will use one or more of the following biomass fuels: landfill debris and landfill gas; logging residues; agricultural crops and wastes; biomass farming; urban, forest, and forest products wood wastes; municipal solid waste; animal wastes; and food processing wastes. Bioenergy projects can produce electricity, mechanical power, space heat, and industrial process heat. The DOE plans to award multiple grants valued at approximately $100,000 for each project. The DOE funding for this program in FY 1995 is about $500,000.

This solicitation will be issued on or about March 17, 1995, and will contain detailed information on funding, cost-sharing requirements, eligibility, application preparation, and evaluation. Responses to the solicitation will be due May 10, 1995. Awards will be announced prior to September 30, 1995.

All responsible sources are encouraged to submit an application. All projects must comply with the requirements of the National Energy Policy Act (NEPA).

Issued in Seattle, Washington on March 2, 1995.

Carol Curtis,

Grants/Contract Specialist.

[FR Doc. 95–7202 Filed 3–22–95; 8:45 am]

BILLING CODE 6450–01–P

Federal Energy Regulatory Commission

[Docket No. RP95–72–000]

Northern Natural Gas Company; Notice of Cancellation of Technical Conference

March 17, 1995.

Take notice that the technical conference originally scheduled to be held on Friday, March 24, 1995, at 10 a.m., has been canceled until further notice.

Linwood A. Watson, Jr.,

Acting Secretary.

[FR Doc. 95–7094 Filed 3–22–95; 8:45 am]

BILLING CODE 6717–01–M

[Docket No. CP95–259–000]

National Fuel Gas Supply Corporation; Notice of Request Under Blanket Authorization

March 17, 1995.

Take notice that on March 13, 1995, National Fuel Gas Supply Corporation (National Fuel), 10 Lafayette Square, Buffalo, New York 14203, filed a request with the Commission in Docket No. CP95–259–000 pursuant to §§ 157.205 and 157.212 of the Commission's Regulations under the Natural Gas Act (NGA) for authorization to operate a delivery tap, authorized in blanket certificate issued in Docket No. CP83–4–000, all as more fully set forth in the request on file with the Commission and open to public inspection.

National Fuel proposes to operate an existing delivery tap, which would be available as a delivery point for any shipper receiving transportation service from National Fuel. The delivery tap is located between National Fuel's Line N and the Three River Pipeline, in Independence Township, Beaver County, Pennsylvania. National Fuel states that the proposed quantities of natural gas to be delivered to each of the affected delivery points and end-use of the gas would be up to 60,000 Dth per day. National Fuel also states that the gas would serve various commercial, industrial and residential end-users downstream of the Three Rivers Pipeline.

Any person or the Commission's staff may, within 45 days after the Commission has issued this notice, file pursuant to Rule 214 of the Commission's Procedural Rules (18 CFR 385.214) a motion to intervene or notice of intervention and pursuant to § 157.205 of the Regulations under the NGA (18 CFR 157.205) a protest to the request. If no protest is filed within the allowed time, the proposed activity shall be deemed to be authorized effective the day after the time allowed for filing a protest. If a protest is filed and not withdrawn within 30 days after the time allowed for filing a protest, the instant request shall be treated as an application for authorization pursuant to Section 7 of the NGA.

Linwood A. Watson, Jr.,

Acting Secretary.

[FR Doc. 95–7095 Filed 3–22–95; 8:45 am]

BILLING CODE 6717–01–M

ENVIRONMENTAL PROTECTION AGENCY

[FRL–5178–1]

Agency Information Collection Activities Under OMB Review

AGENCY: Environmental Protection Agency (EPA).

ACTION: Notice.

SUMMARY: In compliance with the Paperwork Reduction Act (44 U.S.C. 3501 *et seq.*), this notice announces that the Information Collection Request (ICR) abstracted below has been forwarded to the Office of Management and Budget (OMB) for review and comment. The ICR describes the nature of the information collection and its expected cost and burden.

DATES: Comments must be submitted on or before April 24, 1995.

FOR FURTHER INFORMATION OR A COPY OF THIS ICR CONTACT: Sandy Farmer at EPA, (202) 260–2740, please refer to EPA ICR # 1189.05.

SUPPLEMENTARY INFORMATION:

Office of Solid Waste and Emergency Response

Title: Identification, Listing, and Rulemaking Petitions (ICR No. 1189.05). This is a renewal and amendment of an approved collection (OMB No. 2050–0053). This renewal includes Part 260 and 261 requirements pertaining to wood-preserving waste (ICR No. 1579) previously approved under OMB No. 2050–0115.

Abstract: This ICR is a comprehensive presentation of the information requirements to apply for petitions, variances, exclusions, and exemptions from various RCRA requirements, as provided in Subpart C of 40 CFR Part 260 and 261.

For rulemaking petitions, all petitioners must submit certain basic information, including name and address, and interest in, description of, and need and justification for the proposed action. In addition, petitioners for equivalent testing or analytical methods must also demonstrate that the proposed method is equal to or superior to the specified method and provide additional information such as a description of proposed method and comparative results of proposed and specified methods. Petitioners seeking to delist a waste produced at a particular facility must demonstrate that the waste does not exhibit the characteristics for which it was listed or any additional factors which may cause the waste to be hazardous. Facilities requesting variances from classification as a solid waste for specified recycled materials must address the relevant criteria contained in § 260.31. EPA uses this information to substantiate that these materials actually are being recycled and are not being accumulated to evade hazardous waste regulation. Owners/operators of enclosed flame combustion devices requesting variances for classification as a boiler must demonstrate the compatibility of the proposed device with classification as a boiler and address the relevant criteria detailed in §§ 260.32 and 260.33 in their demonstrations.

For hazardous waste exclusions, §§ 261.3 and 261.4 contain provisions that allow generators to obtain a hazardous waste exclusion for certain types of wastes. Facilities applying for these exclusions must either submit supporting information or keep detailed records. Facility requirements for treatability study exemptions for samples of hazardous waste not subject to DOT or USPS shipping requirements must comply with the information requirements of § 261.4(d)(2). Information requests include initial notification, recordkeeping, reporting, and final disposition notification. Facilities generating and collecting treatability study samples may also petition to increase sample quantity limits in excess of the specified limits. EPA uses this information to track the treatability study sample wastes, to confirm the proper management of these wastes, and to ensure that only legitimate treatability study activities are conducted.

For hazardous waste listing exemptions, 40 CFR 261.31(b)(2)(ii) details informational requirements for generators and treatment, storage and disposal facilities proving their sludges are exempt from listing as F037 and F038 wastes. Section 261.35(b) and (c) sets out the requirements for the cleaning or replacement of all process equipment that may have come into contact with chlorophenolic formulations or constituents.

Burden Statement: The estimated average public reporting burden for this collection varies from 4 hours per response (e.g., nonwastewater exemption) to 1,618 hours per response (e.g., delisting petition) depending on the type of petition or demonstration. This estimate includes all aspects of the information collection including the time for reviewing instructions, searching existing data sources, gathering and maintaining the data needed, and completing and reviewing the collection of information. The estimated annual recordkeeping burden varies from 11 to 73 hours per recordkeeper, depending on the type of petition or demonstration.

Respondents: Facilities generating hazardous and solid waste, generators and collectors of treatability study samples, and laboratories and other facilities conducting treatability studies.

Estimated Number of Respondents: 250.

Estimated Number of Responses Per Respondent: 1.

Estimated Total Annual Burden on Respondents: 39,937 hours.

Frequency of Collection: On occasion.

Send comments regarding the burden estimate, or any other aspect of this collection of information, including suggestions for reducing the burden, (please refer to EPA ICR # 1189.05 and OMB # 2050–0053) to:

Sandy Farmer, EPA ICR # 1189.05, U.S. Environmental Protection Agency, Information Policy Branch (2136), 401 M Street, S.W., Washington, D.C. 20460

and

Jonathan Gledhill, OMB # 2050–0053, Office of Management and Budget, Office of Information and Regulatory Affairs, 725 17th St., N.W., Washington, D.C. 20503

Dated: March 16, 1995.

David Schwarz,

Acting Director, Regulatory Management Division.

[FR Doc. 95–7194 Filed 3–22–95; 8:45 am]

BILLING CODE 6560–50–M

[FRL–5178–1]

Public Water System Supervision Program Revision for the Government of the Virgin Islands

AGENCY: United States Environmental Protection Agency (USEPA).

ACTION: Notice.

SUMMARY: Notice is hereby given that the Government of the Virgin Islands is revising its approved Public Water System Supervision Primacy Program. The Government of the Virgin Islands has adopted drinking water regulations that satisfy the National Primary Drinking Water Regulations for the Synthetic Organic Chemicals and Inorganic Chemicals; Monitoring for Unregulated Contaminants rule (Phase 2) Monitoring for Volatile Organic Chemicals rule (Phase 2B), and the Synthetic Organic Chemicals and Inorganic Chemicals rule (Phase 5). These regulations were promulgated by EPA on January 30, 1991 (56 FR 3526), July 1, 1991 (56 FR 30266) with May 27, 1992 correction (57 FR 22178); and July 17, 1992 (57 FR 31776), respectively.

The USEPA has determined that the Virgin Islands' Phase 2, 2B and 5 regulations are no less stringent than the corresponding Federal regulations and that the Virgin Islands continues to meet all requirements for primary enforcement responsibility as specified in 40 CFR 142.10. All interested parties, other than Federal Agencies, may request a public hearing. A request for a public hearing must be submitted to the USEPA Regional Administrator at the address shown below within thirty (30) days after the date of this **Federal Register** notice. If a substantial request for a public hearing is made within the required thirty-day period, a public hearing will be held and a notice will be given the **Federal Register** and a newspaper of general circulation. Frivolous or insubstantial requests for a hearing may be denied by the Regional Administrator.

If no timely and appropriate request for a hearing is received and the Regional Administrator does not choose to hold a hearing on his/her motion,this determination shall become final and effective thirty (30) days after publication of this **Federal Register** notice.

Any request for a public hearing shall include the following information:

(1) The name, address and telephone number of the individual organization or other entity requesting a hearing;

(2) A brief statement of the requesting person's interest in the Regional Administrator's determination and a brief statement on information that the requesting person intends to submit at such hearing;

(3) The signature of the individual making the requests or, if the request is made on behalf of an organization or other entity, the signature of a responsible official of the organization or other entity.

ADDRESSES: Requests for Public Hearing shall be addressed to: Carl-Axel P. Soderberg—Director, U.S. Environmental Protection Agency, Caribbean Field Office, Centrol Europa Building, 1492 Ponce De Leon Avenue, Suite—417, Santurce, Puerto Rico 00907.

All documents relating to this determination are available for inspection between the hours of 9 am and 4:30 pm, Monday through Friday, at the following offices:

Department of Planning and Natural Resources, Public Water Supply Supervision Program, Government of the Virgin Islands, Nisky Center, Suite 231, Nisky 45A, St. Thomas, Virgin Islands 00802

U.S. Environmental Protection Agency, Caribbean Field Office, Centro Europa Building, 1492 Ponce De Leon Avenue, Suite—417, Santurce, Puerto Rico 00907

U.S. Environmental Protection Agency—Region II, Public Water System Supervision Section Room 853, Jacob K. Javits Federal Building, 26 Federal Plaza, New York, New York 10278

For further information, you may contact: Victor Trinidad, Chief, Water Management Staff, U.S. Environmental Protection Agency, Caribbean Field Office, Centro Europa Building, 1492 Ponce De Leon Avenue, Suite–417, Santurce, Puerto Rico 00907, (809) 729–6951.

(Section 1413 of the Safe Drinking Water Act, as amended, and 40 CFR 142.10 of the NPDWR)

Dated: February 28, 1995.

William J. Muszynski,

Acting Regional Administrator, EPA, Region II.

[FR Doc. 95–7193 Filed 3–22–95; 8:45 am]

BILLING CODE 6560–50–M

FEDERAL EMERGENCY MANAGEMENT AGENCY

Availability of Documents for ''Contamination Monitoring Standard for a Portal Monitor Used for Radiological Emergency Response''

AGENCY: Federal Emergency Management Agency (FEMA).

ACTION: Notice.

SUMMARY: FEMA announces the availability of three documents: ''Contamination Monitoring Standard for a Portal Monitor Used for Emergency Response'' (the Standard); ''Background Information for the Contamination Monitoring Standard for a Portal Monitor Used for Emergency Response'' (background information), and ''Statements of Consideration for the Contamination Monitoring Standard for

a Portal Monitor Used for Emergency Response'' (resolution of comments).

ADDRESSES: Copies of the documents may be obtained by contacting Ralph A. Myers, Federal Emergency Management Agency, 500 C Street SW., Washington, DC 20472, (202)646–3084, (facsimile) (202)646–3486.

FOR FURTHER INFORMATION CONTACT: Ralph A. Myers, Federal Emergency Management Agency, 500 C Street SW., Washington, DC 20472, (202)646–3084, (facsimile) (202)646–3486.

SUPPLEMENTARY INFORMATION: In the event of an accident at a commercial nuclear power plant, the public may be exposed to airborne or deposited radioactive material if significant amounts of radioactive particulate materials are released to the atmosphere. The Standard sets the level for detection by a portal monitor of radioactive contamination that, if detected, would warrant decontamination measures. The objective is to minimize the risk of health effects to an individual from external radioactive contamination on the skin and clothing. The background document provides a detailed discussion of the scientific basis and rationale supporting selection of the numerical value of this Standard.

The portal monitor must have the capability to detect at least one microcurie (μCi) of radionuclides that emit beta and gamma radiation, in the form of surface contamination with a widespread nonuniform distribution over an individual. One or more cesium–137 (Cs–137) sealed source(s) with a total activity not exceeding one microcurie (μCi) shall be used for determining compliance with the Standard. Detectability of this amount of radioactivity shall be demonstrated by the manufacturer to cognizant State or local government officials with the Cs–137 source(s) located at several points along a vertical line centered between the two side columns of the unit between 0.5 feet and 5.5 feet above the base upon which the individual stands when being monitored. It is the responsibility of cognizant State or local government officials (not FEMA or other Federal agencies) to determine and assure that portal monitors intended for use for commercial nuclear power plant accidents meet this Standard. Such officials should document the intended use of portal monitors in their emergency plans. State and local governments that use or intend to use portal monitors should assure compliance with this Standard by April 30, 1996.

Since the issuance of this Standard constitutes guidance for State and local governments, alternative approaches for meeting the intent of this Standard may be proposed by State and local governments for review, evaluation, and approval by FEMA. Such alternative approaches should be submitted to the applicable FEMA Regional Director for review, recommendation, and forwarding to FEMA Headquarters for disposition.

This Standard will be incorporated in the ''Radiological Emergency Preparedness (REP) Exercise Manual'' (FEMA–REP–14).

Kay C. Goss,

Associate Director, Preparedness, Training, and Exercises Directorate.

[FR Doc. 95–7187 Filed 3–22–95; 8:45 am]

BILLING CODE 6718–20–P

FEDERAL LABOR RELATIONS AUTHORITY

Federal Service Labor-Management Relations Statute; Collective Bargaining; Comment Solicitation for Policy Statement

AGENCY: Federal Labor Relations Authority.

ACTION: Clarification of response deadline.

SUMMARY: The Federal Labor Relations Authority (Authority) published a Notice on March 16, 1995, 60 FR 14285, soliciting comments concerning the issuance of a policy statement. The Authority indicated in the section entitled ''DATES'' that comments must be received by the Authority by close of business on April 17, 1995, to be considered. However, the body of the Notice indicated that comments must be received by close of business on April 14, 1995, to be considered. This Notice clarifies that the deadline for submitting comments is April 17, 1995.

Dated: March 20, 1995.

Federal Labor Relations Authority.

Solly Thomas,

Executive Director.

[FR Doc. 95–7207 Filed 3–22–95; 8:45 am]

BILLING CODE 6267–01–P

FEDERAL MARITIME COMMISSION

Ocean Freight Forwarder License Applicants

Notice is hereby given that the following applicants have filed with the Federal Maritime Commission applications for licenses as ocean freight forwarders pursuant to section 19 of the Shipping Act of 1984 (46 U.S.C. app. 1718 and 46 CFR 510).

Persons knowing of any reason why any of the following applicants should not receive a license are requested to contact the Office of Freight Forwarders, Federal Maritime Commission, Washington, DC 20573.

Superior Shipping, Inc., 13910 S.W. 28th Street, North Miami, FL 33175, Officers: Elena Dieppa, President/Sole Officer

Blue Pacific Services, 100 Oceangate, Suite 788, Long Beach, CA 90802, Officers: Alex Yang, President, Chuck Yang, Secretary/Vice President

World Cargo Corporation, 4408 N.W. 74th Avenue, Miami, FL 33166, Officers: Diana Obregon-Bader, President, Liliana Haynes, Vice President

All Points Export Incorporated d/b/a Appex, Inc., 3512 N.E. 140th Street, Seattle, WA 98125, Officers: Eliza Y. Chan, President, Solomon M. Chan, Vice President

Worldwide Cargo Express, Inc. d/b/a Wessco International, 1551 NW 93rd Avenue, Miami, FL 33172, Officers: Carlos A. Henao, President, Astrid Henao, Vice President, Betty Hernandez, Vice President Marketing, Astrid Escalona, Treasurer, Carlos F. Henao, Operation's Director

LR International, Inc., 801–H Chase Avenue, Elk Grove Village, IL 60007, Officers: Linda L. Frantz, Frederick G. Frantz, Jr.

Dated: March 20, 1995.

By the Federal Maritime Commission.

Joseph C. Polking,

Secretary.

[FR Doc. 95–7126 Filed 3–22–95; 8:45 am]

BILLING CODE 6730–01–M

FEDERAL RESERVE SYSTEM

Agency Forms Under Review

AGENCY: Board of Governors of the Federal Reserve System.

ACTION: Notice.

BACKGROUND: On June 15, 1984, the Office of Management and Budget (OMB) delegated to the Board of Governors of the Federal Reserve System (Board) its approval authority under the Paperwork Reduction Act of 1980, as per 5 CFR 1320.9, to approve of and assign OMB control numbers to collection of information requests and requirements conducted or sponsored by the Board under conditions set forth in 5 CFR 1320.9. Board-approved collections of information will be incorporated into the official OMB inventory of currently approved collections of information. A copy of the OMB 83I and supporting statement and the approved collection of information instrument will be placed into OMB's public docket files. The following form, which is being handled under this

delegated authority, has received initial Board approval and is hereby published for comment. At the end of the comment period, the proposed information collection, along with an analysis of comments and recommendations received, will be submitted to the Board for final approval under OMB delegated authority.

DATES: Comments must be submitted on or before April 24, 1995.

ADDRESSES: Comments, which should refer to the OMB Docket number (or Agency form number in the case of a new information collection that has not yet been assigned an OMB number), should be addressed to Mr. William W. Wiles, Secretary, Board of Governors of the Federal Reserve System, 20th and C Streets, N.W., Washington, D.C. 20551, or delivered to the Board's mail room between 8:45 a.m. and 5:15 p.m., and to the security control room outside of those hours. Both the mail room and the security control room are accessible from the courtyard entrance on 20th Street between Constitution Avenue and C Street, N.W. Comments received may be inspected in room B-1122 between 9:00 a.m. and 5:00 p.m., except as provided in section 261.8 of the Board's Rules Regarding Availability of Information, 12 CFR 261.8(a).

A copy of the comments may also be submitted to the OMB desk officer for the Board: Milo Sunderhauf, Office of Information and Regulatory Affairs, Office of Management and Budget, New Executive Office Building, Room 3208, Washington, D.C. 20503.

FOR FURTHER INFORMATION CONTACT: A copy of the proposed form and instructions, the Paperwork Reduction Act Submission (OMB 83I), supporting statement, and other documents that will be placed into OMB's public docket files once approved may be requested from the agency clearance officer, whose name appears below.

Mary M. McLaughlin, Federal Reserve Board Clearance Officer (202-452-3829), Division of Research and Statistics, Board of Governors of the Federal Reserve System, Washington, D.C. 20551. For the hearing impaired *only*, Telecommunications Device for the Deaf (TDD) Dorothea Thompson (202–452–3544), Board of Governors of the Federal Reserve System, Washington, D.C. 20551.

Proposal to approve under OMB delegated authority the implementation of the following report:

1. Report title: Finance Company Questionnaire
Agency form number: FR 3033p
OMB Docket number: 7100–0277
Frequency: One-time
Reporters: Domestic finance companies
Annual reporting hours: 775
Estimated average hours per response: 0.25
Number of respondents: 3,100
Small businesses are affected.

General description of report: This information collection is voluntary [12 U.S.C. §§225(a), 263, and 353-359] and is given confidential treatment [5 U.S.C. Y552(b)(4)].

Abstract: Since 1995 the Federal Reserve has conducted surveys of domestic finance companies every five years on consumer and business credit and on major assets and liabilities of finance companies. The FR 3033p is a one-page questionnaire that determines which finance companies are in existence and for those that are, information is requested about the company's total receivables, areas of specialization, and other characteristics.

Board of Governors of the Federal Reserve System, March 17, 1995

Jennifer J. Johnson,

Deputy Secretary of the Board

[FR Doc. 95–7119 Filed 3–22–95; 8:45 am]

Billing Code 6210–01–F

Community Bancshares, Inc. Employee Stock Ownership Plan; Notice of Application to Engage de novo in Permissible Nonbanking Activities

The company listed in this notice has filed an application under § 225.23(a)(1) of the Board's Regulation Y (12 CFR 225.23(a)(1)) for the Board's approval under section 4(c)(8) of the Bank Holding Company Act (12 U.S.C. 1843(c)(8)) and § 225.21(a) of Regulation Y (12 CFR 225.21(a)) to commence or to engage *de novo*, either directly or through a subsidiary, in a nonbanking activity that is listed in § 225.25 of Regulation Y as closely related to banking and permissible for bank holding companies. Unless otherwise noted, such activities will be conducted throughout the United States.

The application is available for immediate inspection at the Federal Reserve Bank indicated. Once the application has been accepted for processing, it will also be available for inspection at the offices of the Board of Governors. Interested persons may express their views in writing on the question whether consummation of the proposal can ''reasonably be expected to produce benefits to the public, such as greater convenience, increased competition, or gains in efficiency, that outweigh possible adverse effects, such as undue concentration of resources, decreased or unfair competition, conflicts of interests, or unsound banking practices.'' Any request for a hearing on this question must be accompanied by a statement of the reasons a written presentation would not suffice in lieu of a hearing, identifying specifically any questions of fact that are in dispute, summarizing the evidence that would be presented at a hearing, and indicating how the party commenting would be aggrieved by approval of the proposal.

Comments regarding the application must be received at the Reserve Bank indicated or the offices of the Board of Governors not later than April 6, 1995.

A. Federal Reserve Bank of Kansas City (John E. Yorke, Senior Vice President) 925 Grand Avenue, Kansas City, Missouri 64198:

1. Community Bancshares, Inc. Employee Stock Ownership Plan, Neosho, Missouri; to engage *de novo* through Community Bancshares, Inc., Neosho, Missouri, in operating Community Bank, Fayetteville, Arkansas, a *de novo* savings association, pursuant to § 225.25(b)(9) of the Board's Regulation Y.

Board of Governors of the Federal Reserve System, March 17, 1995.

Jennifer J. Johnson,

Deputy Secretary of the Board.

[FR Doc. 95–7116 Filed 3–22–95; 8:45 am]

BILLING CODE 6210–01–F

First Southern Bancshares, Inc., et al.; Formations of; Acquisitions by; and Mergers of Bank Holding Companies

The companies listed in this notice have applied for the Board's approval under section 3 of the Bank Holding Company Act (12 U.S.C. 1842) and § 225.14 of the Board's Regulation Y (12 CFR 225.14) to become a bank holding company or to acquire a bank or bank holding company. The factors that are considered in acting on the applications are set forth in section 3(c) of the Act (12 U.S.C. 1842(c)).

Each application is available for immediate inspection at the Federal Reserve Bank indicated. Once the application has been accepted for processing, it will also be available for inspection at the offices of the Board of Governors. Interested persons may express their views in writing to the Reserve Bank or to the offices of the Board of Governors. Any comment on an application that requests a hearing must include a statement of why a written presentation would not suffice in lieu of a hearing, identifying specifically any questions of fact that are in dispute and summarizing the evidence that would be presented at a hearing.

Unless otherwise noted, comments regarding each of these applications must be received not later than April 17, 1995.

A. Federal Reserve Bank of Atlanta (Zane R. Kelley, Vice President) 104 Marietta Street, N.W., Atlanta, Georgia 30303:

1. First Southern Bancshares, Inc., Lithonia, Georgia; to become a bank holding company by acquiring 100 percent of the voting shares of First Southern Bank, Lithonia, Georgia.

B. Federal Reserve Bank of St. Louis (Randall C. Sumner, Vice President) 411 Locust Street, St. Louis, Missouri 63166:

1. Union Illinois Company Employee Stock Ownership Trust, Swansea, Illinois; to become a bank holding company by acquiring 28.21 percent of the voting shares of Union Illinois Company, Swansea, Illinois, and thereby indirectly acquire Union Bank of Illinois, Swansea, Illinois, and The State Bank of Jerseyville, Jerseyville, Illinois.

C. Federal Reserve Bank of Minneapolis (James M. Lyon, Vice President) 250 Marquette Avenue, Minneapolis, Minnesota 55480:

1. Community First Bankshares, Inc., Fargo, North Dakota; to merge with Snow Bankcorp, Inc., Dillion, Colorado, and thereby indirectly acquire Snow Bank, N.A., Dillon, Colorado.

Board of Governors of the Federal Reserve System, March 17, 1995.

Jennifer J. Johnson,

Deputy Secretary of the Board.

[FR Doc. 95–7117 Filed 3–22–95; 8:45 am]

BILLING CODE 6210–01–F

Kari Torgerhagen, et al.; Change in Bank Control Notices; Acquisitions of Shares of Banks or Bank Holding Companies

The notificants listed below have applied under the Change in Bank Control Act (12 U.S.C. 1817(j)) and § 225.41 of the Board's Regulation Y (12 CFR 225.41) to acquire a bank or bank holding company. The factors that are considered in acting on the notices are set forth in paragraph 7 of the Act (12 U.S.C. 1817(j)(7)).

The notices are available for immediate inspection at the Federal Reserve Bank indicated. Once the notices have been accepted for processing, they will also be available for inspection at the offices of the Board of Governors. Interested persons may express their views in writing to the Reserve Bank indicated for that notice or to the offices of the Board of Governors. Comments must be received not later than April 6, 1995.

A. Federal Reserve Bank of Minneapolis (James M. Lyon, Vice President) 250 Marquette Avenue, Minneapolis, Minnesota 55480:

1. Kari Torgerhagen, Milan, Minnesota; to retain an additional 8.96 percent, for a total of 29.04 percent, of the voting shares of Milan Agency, Inc., Milan, Minnesota, and thereby indirectly acquire Prairie State Bank, Milan, Minnesota.

2. Erik Thompson, Milan, Minnesota; to retain an additional 8.22 percent, for a total of 26.66 percent, of the voting shares of Milan Agency, Inc., Milan, Minnesota, and thereby indirectly acquire Prairie State Bank, Milan, Minnesota.

Board of Governors of the Federal Reserve System, March 17, 1995.

Jennifer J. Johnson,

Deputy Secretary of the Board.

[FR Doc. 95–7118 Filed 3–22–95; 8:45 am]

BILLING CODE 6210–01–F

DEPARTMENT OF HEALTH AND HUMAN SERVICES

Health Resources and Services Administration

National Organ Transplant Act; Grants to Increase Organ Donation

AGENCY: Health Resources and Services Administration, HHS.

ACTION: Notice of the availability of grant funds.

SUMMARY: The Health Resources and Services Administration (HRSA) announces that fiscal year (FY) 1995 funds are available for grants for assistance to organ procurement organizations and other private nonprofit entities to develop and implement a plan to increase the number of organ donors from non-donor hospitals that have characteristics similar to donor hospitals. The grants are authorized by Sections 371 and 374 of the Public Health Service (PHS) Act, as amended. Funds are appropriated under Pub. L. 103–333.

DATES: To receive consideration, grant applications must be received by the close of business May 22, 1995.

Applications will be considered as meeting the deadline if they are either: (1) Received on or before the deadline date; or (2) postmarked on or before the deadline date and received in time for submission to the review committee. A legibly dated receipt from a commercial carrier or U.S. Postal Service will be accepted in lieu of a postmark. Private metered postmarks will not be acceptable as proof of timely mailing. Hand delivered applications must be received by 5:00 p.m. May 22, 1995. Applications received after the deadline will be returned to the applicant.

ADDRESSES: Grant applications and additional information regarding business, administrative or fiscal issues related to the awarding of grants under this Notice may be requested from Ms. Glenna Wilcom, Grants Management Officer (BHRD), Parklawn Building, Room 7–15, 5600 Fishers Lane, Rockville, Maryland 20857, telephone (301) 443–2280. Applicants for grants will use Form PHS 5161–1 (revised 7/92), approved under OMB Control Number 0937–0189. Completed applications must be mailed to the office of the Grants Management Officer (BHRD).

FOR FURTHER INFORMATION CONTACT: Additional information relating to technical or program issues may be obtained from Mr. Remy Aronoff, Chief, Operations and Analysis Branch, Division of Organ Transplantation, Parklawn Building, Room 7–18, 5600 Fishers Lane, Rockville, Maryland 20857, (301) 443–7577.

SUPPLEMENTARY INFORMATION:

Background and Objective

Section 371 of the Public Health Service (PHS) Act authorizes a program of grants and special projects for the purpose of increasing the number of organ donors.

The principal purpose of this grant program is to increase the availability of donor organs in this country. In past years, the program has attempted to further this objective primarily through support of public and professional education projects. This year, the grant program will focus on increasing the number of organ donors from non-donor hospitals that have characteristics similar to donor hospitals. Research conducted by Johns Hopkins School of Hygiene and Public Health, under contract to HRSA's Division of Organ Transplantation, indicates that approximately 850 hospitals with organ donor capability did not have a solid organ donor from their hospital in any of the years 1991, 1992, or 1993. A hospital was considered to have donor capability if it had a staff neurologist, an anesthesiologist, an operating room, and an intensive care unit. These services were considered essential for the identification and determination of brain death, and the maintenance and procurement of organs. An additional criterion was bed capacity of 50 beds or more.

In 1992, 29,499 patients were on the transplant waiting list. That same year,

a total of 14,068 organs were recovered for transplant from 4,277 cadaveric donors. Also during that year 2,564 patients died while waiting for an organ. In the last 2 years the cadaveric donor rate has increased slightly from approximately 4,500 to 4,800 donors per year. Currently there are over 37,000 people registered on the Organ Procurement and Transplantation Network's transplant waiting list.

In an effort to improve the procurement process and the organ donor rate at the 850 hospitals mentioned above, two (2) grants will be awarded for projects which focus on increasing donation at these hospitals; in particular, hospitals with 150 beds or more. The grantee will be required to develop and implement a methodology with the objective of producing at least one solid organ donor at no fewer than 50 percent of the identified hospitals located in the designated organ procurement organization (OPO) service area.

Availability of Funds

Pending the availability of funds, up to $100,000 is available for the grant program in fiscal year (FY) 1995. Two (2) grants for $50,000 each will be awarded. Applicants are requested to propose a two-year plan specifying the work to be done each year. Funding for the second year (an additional $50,000) will be contingent on the availability of funds and progress toward objectives. Based on the applications received, the program may decide to award just one grant in this fiscal year for an amount not to exceed $100,000. See the **Application Evaluation Criteria** section for additional information on funding.

Eligible Applicants

The grant program is open to organ procurement organizations (OPOs) and other private nonprofit entities involved with organ donation and transplantation.

Joint applications of two or more *eligible* entities may be submitted, e.g., an OPO and a non-OPO, or two OPOs. In such instances, one entity must be designated as the grantee institution on the application. If a non-OPO wishes to apply for a grant under this grant program, it must have a written cooperative agreement with the designated OPO for the non-donor hospitals identified in the project. Preference will be given to those proposals involving a large number of hospitals that have the greatest potential of generating at least one solid organ donor.

Additional Information

A listing of non-donor hospitals having characteristics similar to donor hospitals within individual OPO service areas is available upon request. Copies of the study by Anne Klassen of the Johns Hopkins School of Hygiene and Public Health are also available. Requests should be directed to Mr. Remy Aronoff or Ms. Philomena Green at (301) 443–7577.

Application Evaluation Criteria

Grant applications will be evaluated by a review committee according to the following criteria:

- Consistency with the program objective and the extent to which the program objective will be met through the proposed project;
- Appropriateness and adequacy of the proposed method(s);
- Appropriateness of the work plan and schedule for organizing and completing the project;
- Capability of the organization to complete the project as proposed;
- Adequacy of supporting documentation justifying the proposal;
- Reasonableness of the budget; and
- Qualifications of the project director and staff.

Final funding decisions for these grants are the responsibility of the Director, BHRD. Preference will be given to those proposals involving a large number of non-donor hospitals that have the greatest potential of generating at least one solid organ donor. This means approved applications involving a large number or percentage of the non-donor hospitals in an individual OPO service area may be considered for funding ahead of approved applications involving a smaller number or percentage of non-donor hospitals in an individual OPO service area.

Allowable Costs

The basis for determining the allowability and allocability of costs charged to PHS grants is set forth in 45 CFR part 74, subpart Q. The three separate sets of cost principles prescribed for recipients of grants for OPOs and other private nonprofit entities are: OMB Circular A–21 for institutions of higher education; 45 CFR part 74, Appendix E for hospitals; and OMB Circular A–122 for nonprofit organizations.

Other Award Information

Grants awarded under this Notice are subject to the provisions of Executive Order 12372, as implemented by 45 CFR part 100, which allows States the option of setting up a system for reviewing applications within their State for assistance under certain Federal programs. The application packages made available by HRSA will contain a listing of States that have chosen to set up such a review system and will provide a point of contact in the State for the review. Applicants (other than federally recognized Indian tribes) should contact their State Single Point of Contact (SPOC) and follow the SPOC's instructions prior to the submission of an application. For proposed projects serving more than one State, the applicant is advised to contact the SPOC of each affected State. The SPOC has 60 days after the application deadline date to submit its review comments. The granting agency does not guarantee to ''accommodate or explain'' for State process recommendations it receives after that date.

The Public Health Service strongly encourages all grant recipients to provide a smoke-free workplace and promote the non-use of all tobacco products. This is consistent with the PHS mission to protect and advance the physical and mental health of the American people.

The Public Health Service urges applicants to submit work plans that address specific objectives of Healthy People 2000. Potential applicants may obtain a copy of Healthy People 2000 (Full Report: Stock No. 017–001–00474–0) or Healthy People 2000 (Summary Report: Stock No. 017–001–00473–1) through the Superintendent of Documents, Government Printing Office, Washington, DC 20402–9325 (Telephone 202–783–3238).

The OMB Catalog of Federal Domestic Assistance Number for this program is 93.134.

Dated: March 20, 1995.

Ciro V. Sumaya,

Administrator.

[FR Doc. 95–7210 Filed 3–22–95; 8:45 am]

BILLING CODE 4160–15–P

Substance Abuse and Mental Health Services Administration

Fiscal Year (FY) 1995 Funding Opportunities for Grants and Cooperative Agreements From the Center for Substance Abuse Prevention; Correction

AGENCY: Center for Substance Abuse Prevention, Substance Abuse and Mental Health Services Administration (SAMHSA), HHS.

ACTION: Correction notice.

SUMMARY: Public notice was given in the **Federal Register** on February 10, 1995, Volume 60, No. 28, pages 7980–7984, of the funding opportunities for grants and cooperative agreements from the Center for Substance Abuse Prevention (CSAP) during FY 1995. On page 7980 under Summary and on page 7983 under 4.1.4 Faculty Development Grants for Preventing Alcohol, Tobacco, and Other Drug Abuse, the receipt date for applications for Faculty Development Grants for Preventing Alcohol, Tobacco, and Other Drug Abuse was listed as May 10, 1995. The receipt date for Faculty Development Grants for Preventing Alcohol, Tobacco, and Other Drug Abuse has subsequently been changed to May 24, 1995. The receipt dates for the other FY 1995 grant and cooperative agreement programs referenced in this notice are unchanged.

FOR FURTHER INFORMATION CONTACT: Dr. Lucille Perez, Associate Director for Medical and Clinical Affairs, Center for Substance Abuse Prevention, Rockwall II, Suite 9D10, 5600 Fishers Lane, Rockville, MD 20857; telephone (301) 443–9351.

Dated: March 19, 1995.

Richard Kopanda,

Acting Executive Officer, SAMHSA.

[FR Doc. 95–7209 Filed 3–22–95; 8:45 am]

BILLING CODE 4162–20–P

DEPARTMENT OF HOUSING AND URBAN DEVELOPMENT

[Docket No. N–95–3885; FR–3884–N–02]

Assistant Secretary for Public and Indian Housing; Submission of Proposed Information Collection OMB for Public Housing Apprenticeship Demonstration Program

AGENCY: Office of the Assistant Secretary for Public and Indian Housing, HUD.

ACTION: Notice.

SUMMARY: The proposed information collection requirements described below have been submitted to the Office of Management and Budget (OMB) for review, as required by the Paperwork Reduction Act. The Department is soliciting public comment on the subject proposal.

DATES:

Comments due date: April 7, 1995.

ADDRESSES: Comments should refer to the proposal by name and should be sent to: Joseph F. Lackey, Jr., OMB Desk Officer, Office of Management and Budget, New Executive Office Building, Washington, D.C. 20503; or Joan Campion, Rules Docket Clerk, Department of Housing and Urban Development (HUD), 451 7th Street, S.W., Room 10276, Washington, D.C. 20410.

FOR FURTHER INFORMATION CONTACT: Kay F. Weaver, Reports Management Officer, Department of Housing and Urban Development (HUD), 451 7th Street, S.W., Room 4178, Washington, D.C. 20410. (202) 708–0050. This is not a toll-free number. Copies of the documents submitted to OMB may be obtained from Ms. Weaver.

SUPPLEMENTARY INFORMATION: The information collection requirements for this notice are published elsewhere in today's **Federal Register**.

This Notice informs the public that the Department of HUD has submitted to OMB, for expedited processing, an information collection package with respect to information required for the Public Housing Apprenticeship Demonstration Program in the Construction Trades. It also is requested that OMB complete its review within 15 days.

The Department has submitted the proposal for the collection of information, as described below, to OMB for review, as required by the Paperwork Reduction Act (44 U.S.C. chapter 35).

(1) *Title of the information collection proposal:* Public Housing Apprenticeship Demonstration Program in the Construction Trades: Proposal and Reporting.

(2) *Office of the agency to collect the information:* Office of the Assistant Secretary for Public and Indian Housing.

(3) *Description of the need for the information and its proposed use:* The data that will be collected in the proposal are necessary for HUD to approve eligible applicants grant funding under this Program. Grantees will report information to HUD annually regarding the implementation of this Program and the effectiveness of the Program in meeting its purpose.

(4) *Agency form numbers:* None.

(5) *Members of the public who will be affected by the proposal:* Public housing agencies.

(6) *How frequently information submissions will be required:* One-time proposal; reporting annually.

(7) *An estimate of the total number of hours needed to prepare the information submission including number of respondents, frequency of response and hours of response:* See attached chart with a total of 2,520 burden hours.

(8) *Type of request:* New.

(9) *The names and telephone numbers of an agency official familiar with the proposal:* Pat Lehrer, Office of Public and Indian Housing, (202) 619–8201.

Authority: Section 3507 of the Paperwork Reduction Act, 44 U.S.C.; Section 7(d) of the Department of Housing and Urban Development Act, 42 U.S.C. 3535(d).

Dated: March 14, 1995.

Joseph Shuldiner,

Assistant Secretary for Public and Indian Housing.

Notice of Submission of Proposed Information Collection to OMB

Proposal: Public Housing Apprenticeship Demonstration Program in the Construction Trades: Proposal and Reporting.

Office: Office of Consumer Relations and Involvement.

Description of the Need for the Information and Its Proposed Use: This information collection is required in connection with Public Housing Apprenticeship Demonstration Program in the Construction Trades. The information will allow HUD to approve proposals for eligible applicants for funding under this Program. Grantees will report annually on the implementation of this Program and the effectiveness of the Construction Trades and Public Housing Operations Demonstration Program in meeting its purpose.

Form Number: None.

Respondents: Public Housing Agencies.

Reporting Burden:

	Number of respondents	×	Frequency of responses	×	Hours per response	=	Burden hours
Total Annual Burden	63		1		Varies		5,544

Status: New Collection.

Contact: Pat Lehrer, (202) 619–8201.

Supporting Statement For Construction Trades Apprenticeship Grant Program

A. Justification.

1. This Grant Program is authorized under subtitle D of Title IV of the Cranston-Gonzales National Affordable Housing Act (P.L. 101–625, approved 11/28/90). The $8.5 million for the Grant Program is funded from the $10 million appropriated under the heading ''Severely Distressed Public Housing Projects,'' as contained in the Departments of Veterans Affairs and Housing and Urban Development, and Independent Agencies Appropriations Act for 1994 (P.L. 103–124, approved 10/28/93). The Demonstration Program will provide job training and ensure bonafide apprenticeship employment opportunities in the construction trades that will lead to self-sufficiency for public housing residents.

2. Eligible applicants (Public Housing Agencies) will submit to HUD a proposal in response to an announcement in the **Federal Register** which requests a one-time submission of information describing its program. HUD needs this information to rate and rank eligible applicants against specific requirements to approve/disapprove them for funding under this Program.

3. Information technology was not considered for collection of this information because eligible applicants are the only means for obtaining the information.

4. This information cannot be duplicated and is not available in the Department.

5. The collection of this information does not impact on a substantial number of small businesses or small entities.

6. The information is collected one-time as funding availability is announced in the **Federal Register**.

7. There are no special circumstances that require the collection to be conducted in a manner inconsistent with the general information collection guidelines in 5 CFR 1320.6.

8. There was no consultation with persons outside the agency. The Notice will allow for interested persons to submit comments.

9. There are no assurances of confidentiality provided to applicants.

10. There are not questions of a sensitive nature.

11. There will be no additional costs to the Federal Government or the applicants. Applicants (PHAs) prepare proposals/applications frequently to compete for grant funds and preparation of this proposal would not create any additional burden which would result in added costs. HUD Field staff will review the proposals as part of their normal workload at no additional costs.

12. The reporting burden associated with this information collection is as follows:

Requirement	No. of respondents	Freq. of responses	Est. avg. response time (hours)	Estimated annual burden (hours)
Threshold Criteria	63	1	36	2,268
Proposal	63	1	48	3,024
Reporting	63	1	4	252
Total Reporting Burden	.....	.....	.....	5,544

13. This is a new collection which will implement a Grant Program.

14. There are no plans to publish this information for statistical purposes.

[FR Doc. 95–7107 Filed 3–22–95; 8:45 am]

BILLING CODE 4210–33–M

DEPARTMENT OF THE INTERIOR

Bureau of Land Management

[CO–920–95–1320–01; COC 54608]

Public Hearing and Request for Comments on Environmental Assessment, Maximum Economic Recovery Report, and Fair Market Value; Application for Competitive Coal Lease COC 54608; Colorado

AGENCY: Bureau of Land Management, Interior.

ACTION: Notice of public hearing.

SUMMARY: Bureau of Land Management, Colorado State Office, Lakewood, Colorado, hereby gives notice that a public hearing will be held to receive comments on the environmental assessment, maximum economic recovery, and fair market value of federal coal to be offered. An application for coal lease was filed by Cyprus Western Coal Company requesting the Bureau of Land Management offer for competitive lease 2,560 acres of federal coal in Routt County, Colorado.

DATES: The public hearing will be held at 7 p.m., April 12, 1995. Written comments should be received no later than April 26, 1995.

ADDRESSES: The public hearing will be held in the Yampa Valley Electric Building, 32 Tenth Street, Steamboat Springs, Colorado. Written comments should be addressed to the Bureau of Land Management, Little Snake Resource Area Office, 1280 Industrial Avenue, Craig, Colorado 81625.

FOR FURTHER INFORMATION CONTACT: John Husband, Area Manager, Little Snake Resource Area Office at the address above, or by telephone at (303) 824–4441.

SUPPLEMENTARY INFORMATION: Bureau of Land Management, Colorado State Office, Lakewood, Colorado, hereby gives notice that a public hearing will be held on April 12, 1995, at 7 p.m., in the Yampa Valley Electric Association Building, 32 Tenth Street, Steamboat Springs, Colorado.

An application for coal lease was filed by Cyprus Western Coal Company requesting the Bureau of Land Management offer for competitive lease federal coal in the lands outside established coal production regions described as:

T. 5 N., R. 86 W., 6th P.M.
sec. 21, N½, and SE¼;
sec. 22, E½E½, and W½;
sec. 23, all;
sec. 26, N½, and N½SW¼;
sec. 27, W½;
sec. 28, NE¼, and E½NW¼;
sec. 33, NE¼NE¼.

containing 2,560 acres.

The coal resource to be offered is limited to coal recoverable by underground mining methods.

The purpose of the hearing is to obtain public comments on the environmental assessment and on the following items:

(1) The method of mining to be employed to obtain maximum economic recovery of the coal;

(2) The impact that mining the coal in the proposed leasehold may have on the area, and

(3) The methods of determining the fair market value of the coal to be offered.

Written requests to testify orally at the April 12, 1995, public hearing should be received at the Little Snake Resource Area Office prior to the close of business April 12, 1995. Those who indicate they wish to testify when they register at the hearing may have an opportunity if time is available.

In addition, the public is invited to submit written comments concerning the fair market value and maximum economic recovery of the coal resource. Public comments will be utilized in establishing fair market value for the coal resource in the described lands. Comments should address specific factors related to fair market value including, but not limited to:

1. The quality and quantity of the coal resource.
2. The price that the mined coal would bring in the market place.
3. The cost of producing the coal.
4. The interest rate at which anticipated income streams would be discounted.
5. Depreciation and other accounting factors.
6. The mining method or methods which would achieve maximum economic recovery of the coal.
7. Documented information on the terms and conditions of recent and similar coal land transactions in the lease area, and
8. Any comparable sales data of similar coal lands.

Should any information submitted as comments be considered to be proprietary by the commenter, the information should be labeled as such and stated in the first page of the submission. Written comments on the environmental assessment, maximum economic recovery, and fair market value should be sent to the Little Snake Resource Area Office at the above address prior to close of business on April 26, 1995.

Substantive comments, whether written or oral, will receive equal consideration prior to any lease offering.

The Draft Environmental Assessment and Maximum Economic Recovery Report are available from the Little Snake Resource Area Office upon request.

A copy of the Draft Environmental Assessment, the Maximum Economic Recovery Report, the case file, and the comments submitted by the public, except those portions identified as proprietary by the commenter and meeting exemptions stated in the Freedom of Information Act, will be available for public inspection at the Colorado State Office, 2850 Youngfield, Lakewood, Colorado, 80215.

Dated: March 17, 1995.

Karen A. Purvis,

Solid Minerals Team, Resource Services.

[FR Doc. 95–7110 Filed 3–22–95; 8:45 am]

BILLING CODE 4310–JB–M

[WY–920–41–5700; WYW134693]

Notice of Proposed Reinstatement of Terminated Oil and Gas Lease

Pursuant to the provisions of 30 U.S.C. 188 (d) and (e), and 43 CFR 3108.2–3 (a) and (b)(1), a petition for reinstatement of oil and gas lease WYW134693 for lands in Sublette County, Wyoming, was timely filed and was accompanied by all the required rentals accruing from the date of termination.

The lessee has agreed to the amended lease terms for rentals and royalties at rates of $5.00 per acre, or fraction thereof, per year and 16⅔ percent, respectively.

The lessee has paid the required $500 administrative fee and $125 to reimburse the Department for the cost of this **Federal Register** notice. The lessee has met all the requirements for reinstatement of the lease as set out in Section 31 (d) and (e) of the Mineral Lands Leasing Act of 1920 (30 U.S.C. 188), and the Bureau of Land Management is proposing to reinstate lease WYW134693 effective December 1, 1994, subject to the original terms and conditions of the lease and the increased rental and royalty rates cited above.

Pamela J. Lewis,

Supervisory Land Law Examiner.

[FR Doc. 95–7154 Filed 3–22–95; 8:45 am]

BILLING CODE 4310–22–M

[WY–920–41–5700; WYW102759]

Notice of Proposed Reinstatement of Terminated Oil and Gas Lease

Pursuant to the provisions of 30 U.S.C. 188(d) and (e), and 43 CFR 3108.2–3(a) and (b)(1), a petition for reinstatement of oil and gas lease WYW102759 for lands in Sublette County, Wyoming, was timely filed and was accompanied by all the required rentals accruing from the date of termination.

The lessee has agreed to the amended lease terms for rentals and royalties at rates of $5.00 per acre, or fraction thereof, per year and 16⅔ percent, respectively.

The lessee has paid the required $500 administrative fee and $125 to reimburse the Department for the cost of this **Federal Register** notice. The lessee has met all the requirements for reinstatement of the lease as set out in Section 31 (d) and (e) of the Mineral Lands Leasing Act of 1920 (30 U.S.C. 188), and the Bureau of Land Management is proposing to reinstate lease WYW102759 effective December 1, 1994, subject to the original terms and conditions of the lease and the increased rental and royalty rates cited above.

Pamela J. Lewis,

Supervisory Land Law Examiner.

[FR Doc. 95–7155 Filed 3–22–95; 8:45 am]

BILLING CODE 4310–22–M

[WY–920–41–5700; WYW102690]

Notice of Proposed Reinstatement of Terminated Oil and Gas Lease

Pursuant to the provisions of 30 U.S.C. 188(d) and (e), and 43 CFR 3108.2–3(a) and (b)(1), a petition for reinstatement of oil and gas lease WYW1027690 for lands in Sublette County, Wyoming, was timely filed and was accompanied by all the required rentals accruing from the date of termination. The lessee has agreed to the amended lease terms for rentals and royalties at rates of $5.00 per acre, or fraction thereof, per year and 16⅔ percent, respectively.

The lessee has paid the required $500 administrative fee and $125 to reimburse the Department for the cost of this **Federal Register** notice. The lessee has met all the requirements for reinstatement of the lease as set out in Section 31 (d) and (e) of the Minerals Lands Leasing Act of 1920 (30 U.S.C. 188), and the Bureau of Land Management is proposing to reinstate lease WYW102690 effective December 1, 1994, subject to the original terms and conditions of the lease and increased rental and royalty rates cited above.

Pamela J. Lewis,

Supervisory Land Law Examiner.

[FR Doc. 95–7156 Filed 3–22–95; 8:45 am]

BILLING CODE 4310–22–M

[WY–920–41–5700; WYW102710]

Notice of Proposed Reinstatement of Terminated Oil and Gas Lease

Pursuant to the provisions of 30 U.S.C. 188(d) and (e), and 43 CFR 3108.2–3(a) and (b)(1), a petition for reinstatement of oil and gas lease WYW102710 for lands in Sublette County, Wyoming, was timely filed and was accompanied by all the required rentals accruing from the date of

termination. The lessee has agreed to the amended lease terms for rentals and royalties at rates of $5.00 per acre, or fraction thereof, per year and 16⅔ percent, respectively.

The lessee has paid the required $500 administrative fee and $125 to reimburse the Department for the cost of this **Federal Register** notice. The lessee has met all the requirements for reinstatement of the lease as set out in Section 31 (d) and (e) of the Mineral Lands Leasing Act of 1920 (30 U.S.C. 188), and the Bureau of Land Management is proposing to reinstate lease WYW102710 effective December 1, 1994, subject to the original terms and conditions of the lease and the increased rental and royalty rates cited above.

Pamela J. Lewis,

Supervisory Land Law Examiner.

[FR Doc. 95–7157 Filed 3–22–95; 8:45 am]

BILLING CODE 4310–22–M

[WY–9020–41–5700; 121982]

Notice of Proposed Reinstatement of Terminated Oil and Gas Lease

Pursuant to the provisions of 30 U.S.C. 188(d) and (e), and 43 CFR 3108.2–3(a) and (b)(1), a petition for reinstatement of oil and gas lease WYW121982 for lands in Laramie County, Wyoming, was timely filed and was accompanied by all the required rentals accruing from the date of termination. The lessee has agreed to the amended lease terms for rentals and royalties at rates of $10.00 per acre, or fraction thereof, per year and 16⅔ percent, respectively.

The lessee has paid the required $500 administrative fee and $125 to reimburse the Department for the cost of this **Federal Register** notice. The lessee has met all the requirements for reinstatement of the lease as set out in Section 31 (d) and (e) of the Mineral Lands Leasing Act of 1920 (30 U.S.C. 188), and the Bureau of Land Management is proposing to reinstate lease WYW121982 effective November 1, 1994, subject to the original terms and conditions of the lease and the increased rental and royalty rates cited above.

Pamela J. Lewis,

Supervisory Land Law Examiner.

[FR Doc. 95–7158 Filed 3–22–95; 8:45 am]

BILLING CODE 4310–22–M

[MT–060–05–1430–01; M82474]

Notice of Realty Action: Plan Amendment for the Exchange of Public and Private Lands in Fergus County, Montana

AGENCY: Bureau of Land Management, Interior.

ACTION: Designation of public lands in Fergus County, Montana, for transfer out of Federal ownership in exchange for lands owned by CR Kendall. The Bureau of Land Management (BLM) is also providing notice of a plan amendment to the Judith-Valley-Phillips Resource Management Plan for the public lands.

SUMMARY: The public will gain private lands with wildlife habitat and recreation potential in addition to public access to the North Moccasin Mountains. Disposal of public lands with relatively low public values will help meet the management goals for the area where the public will gain private land with high resource values and public access. Therefore, this exchange is in the public interest. The Bureau of Land Management has advised State and local officials regarding the proposed exchange.

The following described public lands are suitable for disposal by exchange under Section 206 of the Federal Land Management Act of 1976, 43 U.S.C. 1716.

Principal Meridian Montana

T. 18 N., R. 18 E.,
Section 29, Lots 1, 2, 5, 7, 8, 13, 14;
Section 31, Lots 8, 9, 16, 18, 19, 23, 25;
Section 32, Lots 2, 3, 4;

Containing 150.51 acres

The United States will exchange this public land to acquire the following described private land:

Principal Meridian Montana

T. 18 N., R. 17 & 18 E.,
MS 6366—Abbey Lode
MS 6727—Extension Lode
MS 6728—Keno Lode
MS 8470—Arizona Lode
MS 8471—Fox Lode
MS 8472—Mason Lode
MS 8473—Placer Lode
MS 8474—Legal Tender Lode

Containing 129.24 acres

DATES: The effective date of this plan amendment decision and proposed exchange notice is March 23, 1995.

Any person who participated in the Judith-Valley-Phillips Resource Management Plan Amendment for the CR Kendall exchange having an interest or adversely affected by the amendment may protest such amendment as stated in 43 CFR 1610.5–2. The protest shall be in writing and filed on or before April 24, 1995. Send protests to: Director (480), Bureau of Land Management, Resource Planning Team, P. O. Box 65755, Washington, D.C. 20036. The protest must contain:

1. The name, mailing address, telephone number and interest of the person filing the protest.
2. A statement of the issue or issues being protested.
3. A statement of the part or parts of the amendment being protested.
4. A copy of all documents addressing the issue or issues submitted during the planning process by the protesting party or an indication of the discussion date of the issues(s) for the record.
5. A concise statement explaining why the State Director's decision may be wrong.

From March 23, 1995 through May 8, 1995, interested parties may submit written comments to Chuck Otto, Resource Area Manager, Bureau of Land Management, Box 1160, Lewistown MT, 59457. Any adverse comments will be evaluated by the BLM, Montana State Director, who may sustain, vacate, or modify this realty action. In the absence of any objections, this realty action will become the final determination of the Department of the Interior.

FOR FURTHER INFORMATION CONTACT: Information related to the Exchange, including the Plan Amendment and Environmental Assessment, is available for review at the Lewistown District Office, P. O. Box 1160, Lewistown MT 59457.

SUPPLEMENTARY INFORMATION: The publication of this notice segregates the public lands described above from settlement, sale, location and entry under the public land laws, including the mining laws, but not from exchange pursuant to Section 206 of the Federal Land Policy and Management Act of 1976 for a period of two years from the date of first publication. The exchange will be made subject to:

1. A reservation to the United States of a right-of-way for ditches or canals in accordance with 43 U.S.C. 945.
2. A 60 foot wide right-of-way reservation, 30 feet on either side of the centerline, to the United States on a road, approximately one-half mile in length, crossing those Federal lands to be conveyed to CR Kendall, specifically Lots 1 and 5, section 29, T18N R18E, and a 60 foot wide permanent, exclusive easement, 30 feet on either side of the centerline, from CR Kendall to the United States on that same road, which crosses sections 29, 31 and 32, T18N R18E.
3. The exchange must meet the requirements of 43 CFR 4110.4–2(b).

This exchange is consistent with Bureau of Land Management policies

and planning and has been discussed with State and local officials. The estimated intended time of the exchange is March 1995. The public interest will be served by completion of this exchange since it will enable the Bureau of Land Management to acquire lands with high public values, public access, and will increase management efficiency of public lands in the area.

Dated: March 13. 1995.

Dave Mari,

District Manager, Lewistown.

[FR Doc. 95–7088 Filed 3–22–95; 8:45 am]

BILLING CODE 4310–DN–P

[CO–050–1610–00]

Availability Notice; Royal Gorge Resource Area Proposed Resource Management Plan and Final Environmental Impact Statement; Colorado

AGENCY: Bureau of Land Management, Interior.

ACTION: Notice of Availability of the Royal Gorge Proposed Resource Management Plan and Final Environmental Impact Statement. This document is now available to the public for a 30 day protest period.

SUMMARY: The Bureau of Land Management, Canon City District, Royal Gorge Resource Area office has prepared a proposed resource management plan (PRMP) and final environmental impact statement (FEIS) for the Royal Gorge Resource Area (RGRA) in accordance with the Federal Land Policy and Management Act of 1976 (FLPMA) and 43 CFR part 1600. A draft resource management plan (DRMP) and environmental impact statement (DEIS) for the RGRA was made available to the public in September of 1993 for a 90 day review and comment period Substantial public comment was received through three public hearings and 180+ written letters. More than nine hundred specific comments were received with the largest concern related to and disagreeing with the recommendation not to designate the 126 miles of the Upper Arkansas River and the 20 miles of Beaver Creek as Wild & Scenic River. These comments have been responded to within the PRMP/FEIS. This final plan replaces and supersedes all existing land use plans and other related environmental documents. This final plan establishes ten ecological subregions upon which all the decisions within the plan are focused. This final plan establishes resource conditions for, provides for managing and allocating of BLM administered land and mineral resources in the RGRA for the next 15 to 20 years. Located in eastern Colorado, the RGRA encompasses 653,000 acres of Federal surface estate and 2,566,000 acres of Federal subsurface mineral estate within Baca, Brent, Chaffee, Crowley, Custer, El Paso, Fremont, Huerfano, Kiowa, Lake, Las Animas, Otero, Park, Prowers, Pueblo, and Teller counties.

Only those parties who made substantial comments to BLM on the RGRA/DEIS during the 90 day review and comment period would be considered to have standing for protest of the decisions within this plan.

DATES: The PRMP/FEIS protest period will begin on March 27, 1995, and will run through close of business on April 26, 1995.

ADDRESSES: Interested parties may obtain a copy of the PRMP/FEIS from the Bureau of Land Management, Royal Gorge Resource Area, 3170 East Main Street, Canon City, CO 81212.

FOR FURTHER INFORMATION CONTACT: Dave Taliaferro, RMP Project Manager, at (719) 539–7560 or Paul Trentzsch, Royal Gorge Area Manager, at (719) 275–0631.

SUPPLEMENTARY INFORMATION: Some of the highlights of the PRMP/FEIS are:

1. The plan focuses on the principles of multiple use and sustained yield as mandated by section 202 of FLPMA. The plan directs future resource condition objectives, land use allocations, and management actions.

2. The plan designates nine areas of critical environmental concern (ACEC's) these being a. Mosquito Pass (4,036 acres), b. Browns Canyon (11,697 acres), c. Droney Gulch (705 acres), d. Arkansas Canyonlands (23,921 acres), e. Grape Creek (15,978 acres), f. Garden Park (2,728 acres), g. Phantom Canyon (6,096 acres), h. Beaver Creek (12,081 acres), and i. Cucharas Canyon (1,314 acres).

3. The plan serves as the final environmental impact statement required for the Wild and Scenic River Act. Twenty miles of Beaver Creek and 126 miles of the Arkansas River were analyzed and found to be eligible and suitable for potential designation under the Wild and Scenic River Act. BLM management directs within the final plan and all 146 stream miles not be recommended to Congress as a potential addition to the National Wild and Scenic River System. These streams would be managed under a protective interim management prescription for a period of three years after the Approved Resource Management Plan (ARMP)/ Record of Decision (ROD) is signed.

4. The plan did carry out an analysis and does recommend that 197,000 acres in the Arkansas River Corridor be recommended to Congress to be designated as a National Recreation Area. This would include the segments of the Arkansas River that were determined to be eligible and suitable for Wild and Scenic River designation.

Upon the closing of the protest period the ARMP/ROD will be prepared and would be tentatively scheduled to be completed by September of 1995.

Stuart L. Freer,

Associate District Manager.

[FR Doc. 95–7159 Filed 3–22–95; 8:45 am]

BILLING CODE 4310–JB–M

[ES–960–1420–00; ES–047165, Group 152, Wisconsin]

Filing of Plat of Survey; Wisconsin

The plat of the survey of an island in the Milwaukee River, in section 25, Township 10 North, Range 21 East, Fourth Principal Meridian, Wisconsin, will be officially filed in Eastern States, Springfield, Virginia at 7:30 a.m., on May 1, 1995.

The survey was requested by the District Manager, Milwaukee District Office, Milwaukee, Wisconsin.

All inquiries or protests concerning the technical aspects of the survey must be sent to the Chief Cadastral Surveyor, Eastern States, Bureau of Land Management, 7450 Boston Boulevard, Springfield, Virginia 22153, prior to 7:30 a.m. May 1, 1995.

Copies of the plat will be made available upon request and prepayment of the reproduction fee of $2.75 per copy.

Dated: March 14, 1995.

Stephen G. Kopach,

Chief Cadastral Surveyor.

[FR Doc. 95–7144 Filed 3–22–95; 8:45 am]

BILLING CODE 4310–GJ–M

[ES–960–1420–00; ES–047168, Group 152, Wisconsin]

Filing of Plat of Survey; Wisconsin

The plat of the survey of an island in the Milwaukee River, in section 28, Township 12 North, Range 21 East, Fourth Principal Meridian, Wisconsin, will be officially filed in Eastern States, Springfield, Virginia at 7:30 a.m., on May 1, 1995.

The survey was requested by the District Manager, Milwaukee District Office, Milwaukee, Wisconsin.

All inquiries or protests concerning the technical aspects of the survey must be sent to the Chief Cadastral Surveyor, Eastern States, Bureau of Land Management, 7450 Boston Boulevard, Springfield, Virginia 22153, prior to 7:30 a.m. May 1, 1995.

Copies of the plat will be made available upon request and prepayment of the reproduction fee of $2.75 per copy.

Dated: March 14, 1995.

Stephen G. Kopach,

Chief Cadastral Surveyor.

[FR Doc. 95–7145 Filed 3–22–95; 8:45 am]

BILLING CODE 4310–GJ–M

[ES–960–1420–00; ES–047170, Group 152, Wisconsin]

Filing of Plat of Survey; Wisconsin

The plat of the survey of two islands in the Milwaukee River, in section 12, Township 8 North, Range 21 East, Fourth Principal Meridian, Wisconsin, will be officially filed in Eastern States, Springfield, Virginia at 7:30 a.m., on May 1, 1995.

The survey was requested by the District Manager, Milwaukee District Office, Milwaukee, Wisconsin.

All inquiries or protests concerning the technical aspects of the survey must be sent to the Chief Cadastral Surveyor, Eastern States, Bureau of Land Management, 7450 Boston Boulevard, Springfield, Virginia 22153, prior to 7:30 a.m. May 1, 1995.

Copies of the plat will be made available upon request and prepayment of the reproduction fee of $2.75 per copy.

Dated: March 14, 1995.

Stephen G. Kopach,

Chief Cadastral Surveyor.

[FR Doc. 95–7146 Filed 3–22–95; 8:45 am]

BILLING CODE 4310–GJ–M

[ES–960–1420–00; ES–047169, Group 152, Wisconsin]

Filing of Plat of Survey; Wisconsin

The plat of the survey of an island in the Milwaukee River, in section 18, Township 9 North, Range 22 East, Fourth Principal Meridian, Wisconsin, will be officially filed in Eastern States, Springfield, Virginia at 7:30 a.m., on May 1, 1995.

The survey was requested by the District Manager, Milwaukee District Office, Milwaukee, Wisconsin.

All inquiries or protests concerning the technical aspects of the survey must be sent to the Chief Cadastral Surveyor, Eastern States, Bureau of Land Management, 7450 Boston Boulevard, Springfield, Virginia 22153, prior to 7:30 a.m. May 1, 1995.

Copies of the plat will be made available upon request and prepayment of the reproduction fee of $2.75 per copy.

Dated: March 14, 1995.

Stephen G. Kopach,

Chief Cadastral Surveyor.

[FR Doc. 95–7147 Filed 3–22–95; 8:45 am]

BILLING CODE 4310–GJ–M

[ES–960–1420–00; ES–047167, Group 152, Wisconsin]

Filing of Plat of Survey; Wisconsin

The plat of the survey of an island in the Milwaukee River, in section 24, Township 11 North, Range 21 East, Fourth Principal Meridian, Wisconsin, will be officially filed in Eastern States, Springfield, Virginia at 7:30 a.m., on May 1, 1995.

The survey was requested by the District Manager, Milwaukee District Office, Milwaukee, Wisconsin.

All inquiries or protests concerning the technical aspects of the survey must be sent to the Chief Cadastral Surveyor, Eastern States, Bureau of Land Management, 7450 Boston Boulevard, Springfield, Virginia 22153, prior to 7:30 a.m. May 1, 1995.

Copies of the plat will be made available upon request and prepayment of the reproduction fee of $2.75 per copy.

Dated: March 14, 1995.

Stephen G. Kopach,

Chief Cadastral Surveyor.

[FR Doc. 95–7148 Filed 3–22–95; 8:45 am]

BILLING CODE 4310–GJ–M

[ES–960–1420–00; ES–047166, Group 152, Wisconsin]

Filing of Plat of Survey; Wisconsin

The plat of the survey of an island in the Milwaukee River, in section 14, Township 11 North, Range 21 East, Fourth Principal Meridian, Wisconsin, will be officially filed in Eastern States, Springfield, Virginia at 7:30 a.m., on May 1, 1995.

The survey was requested by the District Manager, Milwaukee District Office, Milwaukee, Wisconsin.

All inquiries or protests concerning the technical aspects of the survey must be sent to the Chief Cadastral Surveyor, Eastern States, Bureau of Land Management, 7450 Boston Boulevard, Springfield, Virginia 22153, prior to 7:30 a.m. May 1, 1995.

Copies of the plat will be made available upon request and prepayment of the reproduction fee of $2.75 per copy.

Dated: March 14, 1995.

Stephen G. Kopach,

Chief Cadastral Surveyor.

[FR Doc. 95–7149 Filed 3–22–95; 8:45 am]

BILLING CODE 4310–GJ–M

[ES–960–1420–00; ES–047164, Group 152, Wisconsin]

Filing of Plat of Survey; Wisconsin

The plat of the survey of an island in the Milwaukee River, in section 13, Township 10 North, Range 21 East, Fourth Principal Meridian, Wisconsin, will be officially filed in Eastern States, Springfield, Virginia at 7:30 a.m., on May 1, 1995.

The survey was requested by the District Manager, Milwaukee District Office, Milwaukee, Wisconsin.

All inquiries or protests concerning the technical aspects of the survey must be sent to the Chief Cadastral Surveyor, Eastern States, Bureau of Land Management, 7450 Boston Boulevard, Springfield, Virginia 22153, prior to 7:30 a.m. May 1, 1995.

Copies of the plat will be made available upon request and prepayment of the reproduction fee of $2.75 per copy.

Dated: March 14, 1995.

Stephen G. Kopach,

Chief Cadastral Surveyor.

[FR Doc. 95–7150 Filed 3–22–95; 8:45 am]

BILLING CODE 4310–GJ–M

ES–960–1420–00; ES–047172, Group 152, Wisconsin

Filing of Plat of Survey; Wisconsin

The plat of the survey of an island in the Milwaukee River, in section 12, Township 11 North, Range 20 East, Fourth Principal Meridian, Wisconsin, will be officially filed in Eastern States, Springfield, Virginia at 7:30 a.m., on May 1, 1995.

The survey was requested by the District Manager, Milwaukee District Office, Milwaukee, Wisconsin.

All inquiries or protests concerning the technical aspects of the survey must be sent to the Chief Cadastral Surveyor, Eastern States, Bureau of Land Management, 7450 Boston Boulevard, Springfield, Virginia 22153, prior to 7:30 a.m. May 1, 1995.

Copies of the plat will be made available upon request and prepayment of the reproduction fee of $2.75 per copy.

Dated: March 14, 1995.

Stephen G. Kopach,

Chief Cadastral Surveyor.

[FR Doc. 95–7151 Filed 3–22–95; 8:45 am]

BILLING CODE 4310–GJ–M

[ES–960–1420–00; ES–047171, Group 152, Wisconsin]

Notice of Filing of Plat of Survey; Wisconsin

The plat of the survey of two islands in the Milwaukee River, in section 5, Township 7 North, Range 22 East, Fourth Principal Meridian, Wisconsin, will be officially filed in Eastern States, Springfield, Virginia at 7:30 a.m., on May 1, 1995.

The survey was requested by the District Manager, Milwaukee District Office, Milwaukee, Wisconsin.

All inquiries or protests concerning the technical aspects of the survey must be sent to the Chief Cadastral Surveyor, Eastern States, Bureau of Land Management, 7450 Boston Boulevard, Springfield, Virginia 22153, prior to 7:30 a.m. May 1, 1995.

Copies of the plat will be made available upon request and prepayment of the reproduction fee of $2.75 per copy.

Dated: March 14, 1995.

Stephen G. Kopach,

Chief Cadastral Surveyor.

[FR Doc. 95–7152 Filed 3–22–95; 8:45 am]

BILLING CODE 4310–GJ–M

[NM–932–1430–01; NMNM 46826]

Notice of Proposed Continuation of Withdrawal; New Mexico

AGENCY: Bureau of Land Management, Interior.

ACTION: Notice.

SUMMARY: The United States Department of Agriculture, Forest Service, proposes that a 197.50-acre withdrawal for the Luna Administrative Site (formerly Luna Ranger Station Administrative Site) in the Gila National Forest continue for an additional 20 years. The land will remain closed to mining, but has been and will remain open to mineral leasing.

DATES: Comments should be received by June 21, 1995.

ADDRESSES: Comments should be sent to State Director, BLM New Mexico State Office, P.O. Box 27115, Santa Fe, New Mexico 87502, 505–438–7502.

FOR FURTHER INFORMATION CONTACT: Jeanette Espinosa, BLM New Mexico State Office, 505–438–7597.

SUPPLEMENTARY INFORMATION: The United States Department of Agriculture, Forest Service, proposes that the existing land withdrawal made by Secretarial Orders dated November 26, 1906 and November 25, 1907, and correction Public Land Order No. 7114 dated January 31, 1995, be continued for a period of 20 years pursuant to Section 204 of the Federal Land Policy and Management Act of 1976, U.S.C. 1714 (1988). The land is described as follows:

New Mexico Principal Meridian

Gila National Forest

T. 5 S., R. 20 W.,
Sec. 32, S½NE¼, E¼SE¼, N½NW¼SE¼, SE¼NW¼SE¼, E½SW¼NW¼SE¼, and E½W½SW¼NW¼SE¼.

The area described contains 197.50 acres in Cibola County.

The purpose of the withdrawal is to protect the Luna Administrative Site (formerly Luna Ranger Station Administrative Site) in the Gila National Forest. The withdrawal segregates the land from the mining laws, but not the mineral leasing laws. No change is proposed in the purpose of the withdrawal.

For a period of 90 days from the date of publication of this notice, all persons who wish to submit comments in connection with the proposed withdrawal continuation may present their views in writing to the State Director in the New Mexico State Office.

The authorized officer of the Bureau of Land Management will undertake such investigations as are necessary to determine the existing and potential demand for the land and its resources. A report will also be prepared for consideration by the Secretary of the Interior, the President, and the Congress, who will determine whether or not the withdrawal will be continued, and if so, for how long.

The final determination on the continuation of the withdrawal will be published in the **Federal Register**. The existing withdrawal will continue until such final determination is made.

Dated: March 15, 1995.

Richard A. Whitley,

Acting State Director.

[FR Doc. 95–7161 Filed 3–22–95; 8:45 am]

BILLING CODE 4310–FB–P

[CA–930–1430–00; CAS 050013, CACA 7858, CAS 730, CAS 059261, CAS 072061]

Notice of Proposed Continuation of Withdrawals; California

AGENCY: Bureau of Land Management, Interior.

ACTION: Notice.

SUMMARY: The United States Department of Agriculture, Forest Service, has proposed to continue withdrawals on approximately 3,348.38 acres for 20 years within the Eldorado, Sierra and Plumas National Forests. The segregative effect on these withdrawals remains unchanged.

DATES: Comments should be received on or before June 21, 1995.

ADDRESSES: Comments should be sent to the California State Director, BLM, 2800 Cottage Way, Room E–2845, Sacramento, California 95825.

FOR FURTHER INFORMATION CONTACT: Marcia Sieckman, BLM California State Office, (916) 979–2858.

SUPPLEMENTARY INFORMATION:

1. CAS 050013

Slate Mountain

The land is described as follows:

Mount Diablo Meridian, T.11 N., R. 12 E., sec. 6, E½ Lot 7, W½ SE¼SW¼.

The area described contains approximatley 39.21 acres in Eldorado County. The purpose of this withdrawal is to protect the Slate Mountain Lookout Site.

Grizzly Flat

The land is described as follows:

Mount Diablo Meridian, T.9 N., R. 13 E., sec. 15, NE½NW¼. The area described contains 40.00 acres in Eldorado County. The purpose of this withdrawal is to protect the Grizzly Flat Guard Station.

Sly Park

The land is described as follows:

Mount Diablo Meridian, T.10 N., R. 13 E., sec. 19, NW¼ of Lot 1.

The area described contains approximately 12.54 acres in Eldorado County. The purpose of this withdrawal is to protect the Sly Park Environmental Education Center.

Pacific Ranger Station

The land is described as follows:

Mount Diablo Meridian, T.11 N., R. 13 E., sec. 34, Lots 3 and 4.

The area described contains 75.20 acres in Eldorado County. The purpose of this withdrawal is to protect the Pacific Ranger Station.

Plummer Ridge Guard Station

The land is described as follows:

Mount Diablo Meridian, T.9 N., R. 14 E., sec. 20, NE¼SW¼SE¼.

The area described contains 10.00 acres in Eldorado County. The purpose of this

withdrawal is to protect the Plummer Ridge Guard Station.

29 Mile Guard Station

The land is described as follows:

Mount Diablo Meridian, T.11 N., R. 14 E., sec. 25, SW¼NE¼SE¼, SE¼NW¼SE¼, NE¼SW¼SE¼, NW¼SE¼SE¼.

The area described contains 40.00 acres in Eldorado County. The purpose of this withdrawal is to protect the 29 Mile Guard Station.

Big Meadows Campground

The land is described as follows:

Mount Diablo Meridian, T.14 N., R. 14 E., sec. 8, S½NE¼SE¼, E½SW¼SE¼, SE¼SE¼.

The area described contains 80.00 acres in Placer County. The purpose of this withdrawal is to protect the Big Meadows Campground.

Lumberyard Ranger Station and Campground

The land is described as follows:

Mount Diablo Meridian, T.8 N., R. 15 E., sec. 15, W½SW¼NE¼, SE¼SW¼NE¼NW¼, SW¼SE¼NE¼NW¼, SE¼NW¼.

The area described contains 65.00 acres in Eldorado and Amador Counties. The purpose of this withdrawal is to protect the Lumberyard Ranger Station and Campground.

Baldwin Public Service Site

The land is described as follows:

Mount Diablo Meridian, T.12 N., R. 17 E., sec. 1, SE¼NE¼. The area described contains 40.00 acres in Eldorado County. The purpose of this withdrawal is to protect the Baldwin Public Service Site.

Bear Creek Recreation Area

The land is described as follows:

Mount Diablo Meridian, T.12 N., R. 11 E., sec. 32, NW¼NE¼SW¼. The area described contains 10.00 acres in Eldorado County. The purpose of this withdrawal is to protect the Bear Creek Recreation Area.

Airport Recreation Area

The land is described as follows:

Mount Diablo Meridian, T.13 N., R. 14 E., sec. 10, E½NE¼SE¼; sec. 11, NW¼SW¼; sec. 15, E½ lot 6, lot 7.

The area described contains approximately 120.28 acres in Eldorado County. The purpose of this withdrawal is to protect the Airport Recreation Area.

South Fork Recreation Area

The land is described as follows:

Mount Diablo Meridian, T.13 N., R. 14 E., sec. 27, W½NW¼NW¼; sec. 28, E½NE¼NE¼.

The area described contains 40.00 acres in Eldorado County. The purpose of this withdrawal is to protect the South Fork Recreation Area.

Lower Bear River Reservoir

The land is described as follows:

Mount Diablo Meridian, T.8 N., R. 16 E., sec. 17, SW¼NW¼, NE¼SE¼, NE¼SW¼SE¼.

The area described contains 90.00 acres in Amador County. The purpose of this withdrawal is to protect the Lower Bear River Reservoir.

Wright's Lake Recreation Area

The land is described as follows:

Mount Diablo Meridian, T.12 N., R. 16 E., sec. 29, SE¼SW¼SE¼, S½N½SE¼SE¼, S½SE¼SE¼; sec. 32, NE¼ except portion covered by Wright's Lake, N½SE¼, SW¼SE¼, NW¼SE¼SE¼; sec.33, NW¼NW¼ except portion covered by Wright's Lake, SW¼NW¼.

The area described contains approximately 347.00 acres in Eldorado County. The purpose of this withdrawal is to protect the Wrights Lake Recreation Area.

Bay View Campground and Picnic Area

Mount Diablo Meridian, T.13 N., R. 17 E., sec. 28, Lots 10 and 19.

The area described contains approximately 39.00 acres in Eldorado County. The purpose of this withdrawal is to protect the Bay View Campground and Picnic Area.

Alder Creek Recreation Area

Mount Diablo Meridian, T.11 N., R. 14 E., sec. 26, S½SW¼SE¼.

The area described contains approximately 20.00 acres in Eldorado County. The purpose of this withdrawal is to protect the Alder Creek Recreation Area.

Woods Lake Recreation Area

Mount Diablo Meridian, T.10 N., R. 18 E., sec. 28, E½NW¼, NE¼SW¼.

The area described contains approximately 120.00 acres in Alpine County. The purpose of this withdrawal is to protect the Woods Lake Recreation Area.

Highway 50 Roadside Zone

A strip of land 200 feet wide on either side of the centerline of the existing U.S. Highway No. 50 through the following legal subdivisions:

Mount Diablo Meridian, T.11 N., R. 13 E., sec. 25, Lots 1, 2, 5 to 7, inclusive; sec. 26, Lots 2 to 4, inclusive; sec. 33, NE¼NE¼, N½NW¼NE¼, W½SW¼NW¼NE¼, N½NE¼NW¼, N½SW¼NE¼NW¼, SE¼NE¼NW¼; sec. 34, Lots 3 to 5, inclusive; sec. 35, Lot 1, NE¼NW¼. T. 11 N., R. 14 E., sec. 25, S½SW¼, SE¼; sec. 26, NE¼SE¼, S½SE¼; sec. 27, NW¼NE¼, SE¼NE¼, NE¼NW¼; sec. 28, N½; sec. 29, NE¼, W½NE¼NW¼NE¼SW¼, W½NW¼NE¼SW¼, SE¼NW¼NE¼SW¼, N½NW¼SW¼NE¼SW¼, N½NW¼SW¼, N½N½SW¼NW¼SW¼, N½NW¼SE¼NW¼SW¼, NE¼SE¼NW¼SW¼, NW¼SE¼; sec. 30, Lots 1 and 2, SE¼SE¼.

The area described contains approximately 458.00 acres in Alpine County. The purpose of this withdrawal is to protect the Highway 50 Roadside Zone.

2. CACA 7858

Mount Diablo Meridian, T.24 N., R. 14 E., sec. 33, NE¼SW¼NW¼.

The area described contains 10.00 acres in Plumas County. The purpose of this withdrawal is to protect the Crocker Guard Station.

3. CAS 730

Mount Diablo Meridian, T.23 N., R. 16 E., sec. 3, SE¼SE¼; sec. 10, NE¼NE¼. T. 24 N., R. 16 E., sec. 32, N½S½, S½NW¼, SW¼NE¼; sec. 33, N½SW¼, NW¼SE¼.

The area described contains 480.00 acres in Plumas County. The purpose of this withdrawal is to protect the Lost Creek Recreation Area.

4. CAS 059261

Mount Diablo Meridian, T. 22 N., R. 11 E., Fractional portion of Lot 1; sec. 13, Lot 1, SE¼SW¼; sec. 14, Lots 1 and 2; sec. 23, Lots 5 through 11, inclusive; sec. 24, Lots 11, 16, 18, 20, 22, 23, 35, 38, 50, 51, 54 and 55; sec. 25, Lots 2 through 4, inclusive, and 7 through 10, inclusive, SW¼SE¼; sec. 26, Lots 1 through 7, inclusive.

Mount Diablo Meridian, T. 22 N., R. 12 E., sec. 7, S½SW¼NE¼, S½SE¼NW¼; sec. 19, W½ of Lot 1.

The area described contains approximately 1,122.15 acres in Plumas County.

5. CAS 072061

Mount Diablo Meridian, T. 6 S., R. 21 E., sec. 12, SE¼NW¼NW¼, E½SW¼NW¼, S½E½W½SW¼; sec. 14, NE¼NE¼.

The area described contains 90.00 acres in Madera County.

The purpose of this withdrawal is to protect the Lewis Creek Recreation Area.

The authorized officer of the Bureau of Land Management will undertake such investigations as are necessary to determine the existing and potential demand for the land and its resources. A report will also be prepared for consideration by the Secretary of the Interior, the President, and the Congress, who will determine whether or not the withdrawal will be continued and, if so, for how long. The final determination on the continuation of the withdrawal will be published in the **Federal Register**. The existing withdrawals will continue until such final determination is made.

Dated: March 15, 1995.

David McIlnay,

Chief, Branch of Lands.

[FR Doc. 95–7162 Filed 3–22–95; 8:45 am]

BILLING CODE 4310–40–P

[CA–940–1430–01; CACA 34475]

Notice of Proposed Withdrawal and Opportunity for Public Meeting; California

AGENCY: Bureau of Land Management, Interior.

ACTION: Notice.

SUMMARY: The Bureau of Land Management proposes to withdraw 5,117 acres of public land in Imperial County to facilitate the All-American Canal Lining Project. This notice closes

the land for up to 2 years from surface entry and mining. The land will remain open to mineral leasing and the Materials Act of 1947.

DATES: Comments and requests for a public meeting must be received by June 21, 1995.

ADDRESSES: State Director, BLM (CA–931.13), Federal Building, Room E–2845, 2800 Cottage Way, Sacramento, California 95825–1889.

FOR FURTHER INFORMATION CONTACT: Duane Marti, BLM California State Office, 916–979–2858.

SUPPLEMENTARY INFORMATION: On March 13, 1995, a petition was approved allowing the Bureau of Reclamation to file an application to withdraw the following described public land from settlement, sale, location, or entry under the general land laws, including the mining laws, subject to valid existing rights:

San Bernardino Meridian

T. 16 S., R. 20 E.,
Sec. 21, SE¼;
Sec. 22, SW¼;
Sec. 26, NW¼NW¼;
Sec. 27, N½;
Secs. 28 to 29, inclusive;
Sec. 33;
Secs. 44 to 45, inclusive;
Secs. 49 to 51, inclusive.

The area described contains approximately 5,117 acres in Imperial County.

The purpose of the proposed withdrawal is to facilitate the All-American Canal Lining Project.

For a period of 90 days from the date of publication of this notice, all persons who wish to submit comments, suggestions, or objections in connection with the proposed withdrawal may present their views in writing to the California State Director of the Bureau of Land Management.

Notice is hereby given that an opportunity for a public meeting is afforded in connection with the proposed withdrawal. All interested persons who desire a public meeting for the purpose of being heard on the proposed withdrawal must submit a written request to the California State Director within 90 days from the date of publication of this notice. Since the proposed withdrawal involves more that 5,000 acres in the aggregate, at least one public meeting will be held as required by 43 CFR 2310.3–1(b)(2)(v). A notice of the time and place will be published in the **Federal Register** at least 30 days before the scheduled date of the meeting.

The application will be processed in accordance with the regulations set forth in 43 CFR 2300.

For a period of 2 years from the date of publication of this notice in the **Federal Register**, the land will be segregated as specified above unless the application is denied or canceled or the withdrawal is approved prior to that date. The temporary uses which may be permitted during this segregative period are those which are compatible with the use of the land by Bureau of Reclamation.

Dated: March 17, 1995.

David McIlnay,

Chief, Branch of Lands.

[FR Doc. 95–7199 Filed 3–22–95; 8:45 am]

BILLING CODE 4310–40–P

Fish and Wildlife Service

Availability of an Environmental Assessment and Receipt of an Application for an Incidental Take Permit for a Project Called Waterside Down, Phase I, a Mixed-Use Project, in Brevard County, Florida

AGENCY: Fish and Wildlife Service, Interior.

ACTION: Notice.

SUMMARY: Waterside Down Development Corporation (Applicant), is seeking an incidental take permit from the Fish and Wildlife Service (Service), pursuant to Section 10(a)(1)(B) of the Endangered Species Act of 1973 (Act), as amended. The permit would authorize the take of four families of the threatened Florida scrub jay, *Aphelocoma coerulescens coerulescens* in Brevard County, Florida, for a period of 5 years. The proposed taking is incidental to construction of 211 single family homes, plus as yet unspecified number of condominium units and commercial buildings, including the necessary infrastructure, on approximately 76.5 acres (Project). The entire site is considered occupied by Florida scrub jays and will be permanently altered. The Project is called Waterside Down, and it is located on the barrier island of Brevard County, adjacent to a Wal Mart/Albertson strip mall and Britanny Apartments to the north, S.R. A1A to the east, Holy Name of Jesus Church and a residential development to the south, and vacant land scheduled to be Waterside Down Phase II on the west.

The Service also announces the availability of an environmental assessment (EA) and habitat conservation plan (HCP) for the incidental take application. Copies of the EA or HCP may be obtained by making a request to the Regional Office address below. This notice also advises the public that the Service has made a preliminary determination that issuing the incidental take permit is not a major Federal action significantly affecting the quality of the human environment within the meaning of Section 102(2)(C) of the National Environmental Policy Act of 1969, as amended. The Finding of No Significant Impact is based on information contained in the EA and HCP. The final determination will be made no sooner than 30 days from the date of this notice. This notice is provided pursuant to Section 10(c) of the Act and National Environmental Policy Act Regulations (40 CFR 1506.6).

DATES: Written comments on the permit application, EA and HCP should be received on or before April 24, 1995.

ADDRESSES: Persons wishing to review the application, HCP, and EA may obtain a copy by writing the Service's Southeast Regional Office, Atlanta, Georgia. Documents will also be available for public inspection by appointment during normal business hours at the Regional Office, or the Jacksonville, Florida, Field Office. Written data or comments concerning the application, EA, or HCP should be submitted to the Regional Office. Please reference permit under PRT–800150 in such comments.

Regional Permit Coordinator, U.S. Fish and Wildlife Service, 1875 Century Boulevard, Suite 200, Atlanta, Georgia 30345, (telephone 404/679–7110, fax 404/679–7280).

Field Supervisor, U.S. Fish and Wildlife Service, 6620 Southpoint Drive, South, Suite 310, Jacksonville, Florida 32216–0912, (telephone 904/232–2580, fax 904/232–2404).

FOR FURTHER INFORMATION CONTACT: Dawn Zattau at the Jacksonville, Florida, Field Office, or Rick G. Gooch at the Atlanta, Georgia, Regional Office.

SUPPLEMENTARY INFORMATION: *Aphelocoma coerulescens coerulescens* is geographically isolated from other subspecies of scrub jays found in Mexico and the Western United States. The Florida scrub jay is found almost exclusively in peninsular Florida and is restricted to scrub habitat. The total estimated population is between 7,000 and 11,000 individuals. Due to habitat loss and degradation throughout the State of Florida, it has been estimated that the Florida scrub jay population has been reduced by at least half in the last 100 years. Surveys have indicated that two families of Florida scrub jays inhabit the Project site. Construction of the Project's infrastructure and subsequent construction of the individual homesites will likely result in death of, or injury to, *Aphelocoma coerulescens coerulescens* incidental to the carrying out of these otherwise lawful activities. Habitat alteration associated with property development will reduce the availability of feeding, shelter, and nesting habitat.

The EA considers the environmental consequences of three alternatives. The no action alternative may result in loss

of habitat for *Aphelocoma coerulescens coerulescens* and exposure of the Applicant under Section 9 of the Act. A second alternative is the proposed Project that is designed with a different mitigation strategy focusing on management of existing lands surrounding the project area. The third alternative, the proposed action alternative, is issuance of the incidental take permit. This provides for restrictions of construction activity, purchase of offsite habitat for the Florida scrub jay, the establishment of an endowment fund for the offsite acquired habitat, and donation of additional offsite habitat. The HCP provides a funding mechanism for these mitigation measures.

Dated: March 16, 1995.

Judy L. Jones,

Acting Regional Director.

[FR Doc. 95–7111 Filed 3–22–95; 8:45 am]

BILLING CODE 4310–55–P

Geological Survey

Earth Observing System (EOS) Land Processes Distributed Active Archive Center (DAAC) Science Advisory Panel

AGENCY: U.S. Geological Survey, Interior.

ACTION: Notice of meeting.

SUMMARY: Pursuant to Public law 92–463, the Land Processes DAAC Science Advisory Panel will meet at the U.S. Geological Survey Earth Resources Observation Systems (EROS) Data Center near Sioux Falls, South Dakota. The Panel, comprised of scientists from academic and government institutions, will provide Land Processes DAAC management with advice and consultation on a broad range of scientific and technical topics relevant to the development and operation of DAAC systems and capabilities.

Topics to be reviewed and discussed by the Panel include status of 1995 Land Processes DAAC development activities; a preliminary list of 1996 activities; DAAC user services status; EOS Core System (ECS) development status; various Land Processes DAAC-related ECS topics; and others.

DATES: April 11–13, 1995, commencing at 8:30 a.m. on April 11 and adjourning by 3:30 p.m. on April 13.

FOR FURTHER INFORMATION CONTACT: Dr. Bryan Bailey, Land Processes DAAC Project Scientist, U.S. Geological Survey, EROS Data Center, Sioux Falls, South Dakota 57198 at (605) 594–6001.

SUPPLEMENTARY INFORMATION: Meetings of the Land Processes DAAC Science Advisory Panel are open to the public.

Dated: March 14, 1995.

Gordon P. Eaton,

Director, U.S. Geological Survey.

[FR Doc. 95–7167 Filed 3–22–95; 8:45 am]

BILLING CODE 4310–31–M

Minerals Management Service

Outer Continental Shelf (OCS) Policy Committee of the Minerals Management Advisory Board; Notice and Agenda for Meeting

AGENCY: Minerals Management Service, Interior.

SUMMARY: The OCS Policy Committee of the Minerals Management Advisory Board will meet at the Houstonian Hotel in Houston, Texas on May 3–4, 1995.

The agenda will cover the following principal subjects:

—Regional Stakeholders Task Force Presentation
—Government Role in Low Oil Price/Marginal Development Scenario: United Kingdom
—Subcommittee on the Oil Pollution Act of 1990 Presentation
—Point-Counter Point: Imports, Is A High Rate A National Security Risk?
—Scientific Committee Update

The meeting is open to the public. Upon request, interested parties may make oral or written presentations to the OCS Policy Committee. Such requests should be made no later than April 14, 1995, to the Office of Advisory Board Support, Minerals Management Service, 381 Elden Street, MS–4110, Herndon, Virginia, 22070, Attention: Terry Holman.

Requests to make oral statements should be accompanied by a summary of the statement to be made. For more information, call Terry Holman at (703) 787–1211.

Minutes of the OCS Policy Committee meeting will be available for public inspection and copying at the Minerals Management Service in Herndon, Virginia.

DATES: Wednesday, May 3 and Thursday, May 4, 1995.

ADDRESSES: The Houstonian Hotel, 111 North Post Oak Lane, Houston, Texas 77024—(713) 680–2626.

FOR FURTHER INFORMATION CONTACT: Terry Holman at the address and phone number listed above.

Authority: Federal Advisory Committee Act, P.L. No. 92–463, 5 U.S.C. Appendix 1, and the Office of Management and Budget's Circular No. A–63, Revised.

Dated: March 15, 1995.

Thomas Gernhofer,

Associate Director for Offshore Minerals Management.

[FR Doc. 95–7168 Filed 3–22–95; 8:45 am]

BILLING CODE 4310–MR–M

INTERSTATE COMMERCE COMMISSION

[Ex Parte No. 290 (Sub No. 5) (95–2)]

Quarterly Rail Cost Adjustment Factor

AGENCY: Interstate Commerce Commission.

ACTION: Approval of rail cost adjustment factor and decision.

SUMMARY: The Commission has approved a second quarter 1995 rail cost adjustment factor (RCAF) and cost index filed by the Association of American Railroads. The second quarter RCAF (Unadjusted) is 1.070. The second quarter RCAF (Adjusted) is 0.820, a decrease of 0.2% from the first quarter 1995 RCAF (Adjusted). Maximum second quarter 1995 RCAF rate levels may not exceed 99.8% of maximum first quarter 1995 rate levels.

EFFECTIVE DATE: April 1, 1995.

FOR FURTHER INFORMATION CONTACT: Robert C. Hasek, (202) 927–6239 or H. Jeff Warren, (202) 927–6243. TDD for the hearing impaired: (202) 927–5721.

SUPPLEMENTARY INFORMATION: Additional information is contained in the Commission's decision. To purchase a copy of the full decision write to, call, or pick up in person from: Dynamic Concepts, Inc., Room 2229, Interstate Commerce Commission Building, 1201 Constitution Avenue, NW., Washington, DC 20423, or telephone (202) 289–4357/4359. (Assistance for the hearing impaired is available through TDD services (202) 927–5721.)

This action will not significantly affect either the quality of the human environment or energy conservation.

Pursuant to 5 U.S.C. 605(b), we conclude that our action will not have a significant economic impact on a substantial number of small entities within the meaning of the Regulatory Flexibility Act.

Decided: March 16, 1995.

By the Commission, Chairman McDonald, Vice Chairman Morgan, and Commissioners Simmons and Owen.

Vernon A. Williams,

Secretary.

[FR Doc. 95–7128 Filed 3–22–95; 8:45 am]

BILLING CODE 7035–01–P

[Finance Docket No. 32671]

Springfield Terminal Railway Company, Trackage Rights Exemption; Eastern Maine Railway Company

Eastern Maine Railway Company (EMR) has agreed to grant overhead trackage rights to Springfield Terminal Railway Company (ST) over approximately 56.39 miles of rail line from milepost 5.61 at the Maine/New Brunswick, Canada border near Vanceboro, ME to milepost 62.00 at Mattawamkeag, ME.[1] The trackage rights were to become effective on March 10, 1995.

This notice is filed under 49 CFR 1180.2(d)(7). If the notice contains false or misleading information, the exemption is void *ab initio*. Petitions to revoke the exemption under 49 U.S.C. 10505(d) may be filed at any time. The filing of a petition to revoke will not stay the transaction. Pleadings must be filed with the Commission and served on: John R. Nadolny, Springfield Terminal Railway Company, Iron Horse Park, North Billerica, MA 01862.

As a condition to use of this exemption, any employees adversely affected by the trackage rights will be protected under Norfolk and Western Ry. Co.—Trackage Rights—BN, 354 I.C.C. 605 (1978), as modified in *Mendocino Coast Ry., Inc.—Lease and Operate*, 360 I.C.C. 653 (1980).

Decided: March 16, 1995.

By the Commission, David M. Konschnik, Director, Office of Proceedings.

Vernon A. Williams,

Secretary.

[FR Doc. 95–7127 Filed 3–22–95; 8:45 am]

BILLING CODE 7035–01–P

[1] EMR, the owner of the line, has granted ST the right to operate its own trains with its own crews between Mattawamkeag and the Maine/New Brunswick border to enable ST to exchange traffic with the New Brunswick Southern Railroad.

DEPARTMENT OF JUSTICE

Antitrust Division

Notice Pursuant to the National Cooperative Research and Production Act of 1993, Unixware Technology Group Inc.

Notice is hereby given that, on July 19, 1994, pursuant to Section 6(a) of the National Cooperative Research and Production Act of 1993, 15 U.S.C. § 4301 *et seq.* (''the Act''), UnixWare Technology Group Inc. has filed written notifications simultaneously with the Attorney General and the Federal Trade Commission disclosing (1) the identities of the parties and (2) the nature and objectives of the venture. The notifications were filed for the purpose of invoking the Act's provisions limiting the recovery of the antitrust plaintiffs to actual damages under specified circumstances. Pursuant to Section 6(b) of the Act, the identities of the parties are: AT&T/GIS, West Columbia, SC; Amdahl Corporation, Sunnyvale, CA; Chorus Systems, Beaverton, OR; Fujitsu Limited, Kawasaki, JAPAN; Hewlett-Packard, Ft. Collins, CO; ICL, Berks, Bracknell, GREAT BRITAIN; Locus Computing, Inglewood, CA; Microport, Scotts Valley, CA; MITSUBISHI/apricot, Kamakura, JAPAN; NEC Systems Laboratory, Inc., Princeton, NJ; Novell, Inc., San Jose, CA; Olivetti S.p.A., Ivera, ITALY; Sony Corporation, Kanaqwa, JAPAN; Stratus Computer, Inc., San Jose, GREAT BRITAIN; and Unisys Corporation, Blue Bell, PA.

The nature and objectives of UTG are to engage in research and development related to the improvement of the UNIX operating system, and to promote and encourage the availability of a variety of ''open'' and compatible UNIX based products and systems which meet the many and varied needs of the end users of those systems.

Constance K. Robinson,

Director of Operations, Antitrust Division.

[FR Doc. 95–7171 Filed 3–22–95; 8:45 am]

BILLING CODE 4410–01–M

Notice Pursuant to the National Cooperative Research and Production Act of 1993; Petrotechnical Open Software Corporation

Notice is hereby given that, on January 17, 1995, pursuant to section 6(a) of the National Cooperative Research and Production Act of 1993, 15 U.S.C. § 4301, *et seq.* (''the Act''), Petrotechnical Open Software Corporation (''POSC'') has filed written notifications simultaneously with the Attorney General and the Federal Trade Commission disclosing changes in its membership. The notifications were filed for the purpose of extending the Act's provisions limiting the recovery of antitrust plaintiffs to actual damages under specified circumstances. Specifically, the following additional parties have become new, non-voting members of POSC: US Geological Survey, Denver, CO; Geographix Incorporated, Denver, CO; Convex Computer Corporation, Houston, TX; and System Development Inc., Houston, TX.

No other changes have been made in either the membership or planned activity of POSC.

On January 14, 1991, POSC filed its original notification pursuant to Section 6(a) of the Act. The Department of Justice published a notice in the **Federal Register** pursuant to Section 6(b) of the Act on February 7, 1991, (56 FR 5021).

The last notification was filed with the Department on October 17, 1994. A notice was published in the **Federal Register** pursuant to Section 6(b) of the Act on February 8, 1995 (60 FR 7584).

Constance K. Robinson,

Director of Operations, Antitrust Division.

[FR Doc. 95–7172 Filed 3–22–95; 8:45 am]

BILLING CODE 4410–01–M

Notice Pursuant to the National Cooperative Research and Production Act of 1993; Spray Drift Task Force

Notice is hereby given that, on January 26, 1995, pursuant to Section 6(a) of the National Cooperative Research and Production Act of 1993, 15 U.S.C. 4301 *et seq.* (''the Act''), the Spray Drift Task Force (SDTF) has filed written notifications simultaneously with the Attorney General and the Federal Trade Commission disclosing changes in its membership. The notifications were filed for the purpose of invoking the Act's provisions limiting the recovery of antitrust plaintiffs to actual damages under specified circumstances. Specifically, Akvo Chemicals bv, Chicago, IL and Merck & Company, Whitehouse Station, NJ have become members to SDTF.

No other changes have been made in either the membership or planned activities of the venture. Membership remains open and the Spray Drift Task Force intends to file additional written notification disclosing all changes in membership.

On May 15, 1990, the Spray Drift Task Force filed its original notification pursuant to Section 6(a) of the Act. The Department of Justice published a notice in the **Federal Register** pursuant to Section 6(a) of the Act on July 5, 1990 (55 FR 27701).

The last notification was filed with the Department on October 5, 1994. A notice was published in the **Federal Register** pursuant to Section 6(b) of the Act on December 1, 1994 (59 FR 61639).

Constance K. Robinson,

Director of Operations, Antitrust Division.

[FR Doc. 95–7173 Filed 3–22–95; 8:45 am]

BILLING CODE 4410–01–M

Notice Pursuant to the National Cooperative Research and Production Act of 1993; Corporation for Open Systems International

Notice is hereby given that, on September 28, 1994, pursuant to Section 6(a) of the National Cooperative Research and Production Act of 1993, 15 U.S.C. § 4301 et seq. (''the Act''), the Corporation for Open Systems International (''COS'') has filed written notification simultaneously with the Attorney General and the Federal Trade Commission disclosing changes in its membership. The notifications were filed for the purpose of extending the Act's provisions limiting the recovery of antitrust plaintiffs to actual damages under specified circumstances. Specifically, the changes are as follows: (1) Electric Power Research Institute ceased membership in COS effective July 24, 1994; (2) The BONDING Consortium, Portsmouth, RI, has entered into an Agreement with COS under which COS will develop an interoperability testing program for communications equipment implementing Bandwidth on Demand (''BONDING'') specifications; (3) the following organizations became Associates of COS's SONET Interoperability Forum (the ''Forum'') on the dates indicated: Alcatel Network Systems, Richardson, TX, on June 30, 1994; Pacific Bell, San Ramon, CA, on August 1, 1994; Reliance Electric, Phoenix, AZ, on June 30, 1994; and Retix, Santa Monica, CA, on August 1, 1994; (4) Wind River Systems, Inc., Alameda, CA, became an Auditing Member of the Forum on June 30, 1994; (5) The following organizations became Patrons of the ISDN Solutions '94 project of COS's ISDN Executive Council, on the dates indicated; diehl isdn GmbH, Leonberg, GERMANY, on July 8, 1994; Intel Corporation, Schaumburg, IL, on July 5, 1994; and Pacific Bell, San Ramon, CA, on June 30, 1994; (6) Shure Brothers Incorporated, Evanston, IL became an Observer of COS's Video Teleconferencing Executive Interest Group on July 15, 1994.

No other changes have been made in either the membership or planned activities of COS. Membership in COS remains open, and COS intends to file additional written notifications disclosing all changes in membership.

On May 14, 1986, COS filed its original notification pursuant to Section 6(b) of the Act. The Department of Justice published a notice in the **Federal Register** pursuant to Section 6(b) of the Act on June 11, 1986, (51 FR 21260).

The last notification was filed by the Department on June 13, 1994. A notice was published in the **Federal Register** pursuant to Section 6(b) of the Act on October 27, 1994 (59 FR 54011).

Constance K. Robinson,

Director of Operations, Antitrust Division.

[FR Doc. 95–7174 Filed 3–22–95; 8:45 am]

BILLING CODE 4410–01–M

Notice Pursuant to the National Cooperative Research and Production Act of 1993; National Information Infrastructure Testbed

Noticeis hereby given that, on August 9, 1994, pursuant to Section 6(a) of the National Cooperative Research and Production Act of 1993, 15 U.S.C. 4301 *et seq.* (''the Act''), the National Information Infrastructure Testbed (''NIIT'') has filed written notification simultaneously with the Attorney General and the Federal Trade Commission disclosing changes in membership. The notifications were filed for the purpose of extending the Act's provisions limiting the recovery of antitrust plaintiffs to actual damages under specified circumstances. Pursuant to Section 6(b) of the Act, the identities of the additional members of NIIT are: California Institute of Technology, Jet Propulsion Laboratory, Pasadena, CA; Center for the New West, Denver, CO; Concurrent Technologies, Johnstown, PA; Entergy Services, Inc., New Orleans, LA; Hitachi Telecom, Inc., Norcross, GA; Hughes Aircraft Corporation, Los Angeles, CA; Intel Corporation, Hillsboro, OR; MCNC, Research Triangle Park, NC; Methodist Health Network of Iowa, Des Moines, IA; Microelectronics & Computer Technology Corporation, Austin, TX; PeerLogic, Inc., San Francisco, CA; Polaroid Corporation, Cambridge, MA; University of Michigan Medical Center, Ann Arbor, MI; and University of Southern California, Los Angeles, CA.

No other changes have been made in the membership, nature and objectives of the consortium. Membership in NIIT remains open, and the consortium intends to file additional written notifications disclosing all changes in membership.

On December 7, 1993, NIIT filed its original notification pursuant to Section 6(a) of the Act. The Department of Justice published a notice in the **Federal Register** pursuant to Section 6(b) of the Act on May 18, 1994 (59 Fed. Reg. 25960).

The last notification was filed with the Department on April 26, 1994. A notice was published in the **Federal Register** pursuant to Section 6(b) of the Act on June 23, 1994 (59 FR 32463).

Constance K. Robinson,

Director of Operations, Antitrust Division.

[FR Doc. 95–7175 Filed 3–22–95; 8:45 am]

BILLING CODE 4410–01–M

Notice Pursuant to the National Cooperative Research and Production Act of 1993 HDP User Group International, Inc.

Notice is hereby given that, on September 14, 1994, pursuant to Section 6(a) of the National Cooperative Research and Production Act of 1993, 15 U.S.C. 4301 *et seq.* (''the Act''), HDP User Group International, Inc., an Arizona non-profit corporation, has filed written notifications simultaneously with the Attorney General and the Federal Trade Commission disclosing (1) identities of the parties and (2) the nature and objectives of the venture. The notifications were filed for the purpose of invoking the Act's provisions limiting the recovery of antitrust plaintiffs to actual damages under specified circumstances. Pursuant to Section 6(b) of the Act, the identities of the parties are Ruben Bergman, Alvsjo, Sweden; Advanced Micro Devices, Sunnyvale, CA; Alcatel, Aventom, Belgium; Digital Equipment Corp., Maynard, MA; Ericsson Telecom AB, Stockholm, Sweden; International Business Machines, Hopewell Junction, NY; Nokia, Espoo, Finland; and Northern Telecom, Ltd., Kanata, Ottawa, Canada.

The HDP User Group International, Inc. Began in August, 1990, as an informal group of companies from Europe and North America whose goal was to influence the development of standard component assembly, and interconnect technologies required for dense electronic and opt-electronic systems, or High Density Packaging. HDP began operating under the VMEbus International Trade Association in 1993, operating as a user group with representatives from within the industry. Subsequently, HDP separated from VMEbus and on June 15, 1994, HDP incorporated as a nonprofit corporation under the laws of the State of Arizona. HDP supports, in concept, open packaging technologies as opposed to proprietary packaging technologies.

The general areas of planned activity are as follows: (a) Collecting the requirements for End Users and the Industry; (b) collecting the requirements of Users for pre-defined application profiles, based upon supplier opportunities; (c) defining preferred concepts of packaging with Suppliers

and their organizations; and (d) working with Suppliers and their organizations aimed at promoting preferred concepts to develop industry standards.

Constance K. Robinson,

Director of Operations, Antitrust Division.

[FR Doc. 95–7176 Filed 3–22–95; 8:45 am]

BILLING CODE 4410–01–M

Notice Pursuant to the National Cooperative Research and Production Act of 1993; Corporation for Open Systems International

Notice is hereby given that, on December 22, 1994, pursuant to Section 6(a) of the National Cooperative Research and Production Act of 1993, 15 U.S.C. 4301 *et seq.* (''the Act''), the Corporation for Open Systems International (''COS'') has filed written notifications simultaneously with the Attorney General and the Federal Trade Commission disclosing changes in its membership. The notifications were filed for the purpose of extending the Act's provisions limiting the recovery of antitrust plaintiffs to actual damages under specified circumstances. Specifically, the changes are as follows: 1) Anritsu Wiltron, Morgan Hill, CA, and Hitachi Telecom, Norcross, GA, became Associates of COS's SONET Interoperability Forum (the ''Forum'') on November 30, 1994, and September 27, 1994, respectively; (2) DSET Corporation, Bridgewater, NJ, and Open Networks Engineering, Inc., Ann Arbor, MI, became Auditing Members of the Forum on October 20, 1994, and September 30, 1994, respectively; (3) Vivo Software, Inc., Waltham, MA, became an Associate of COS's Video Teleconferencing Executive Interest Group on November 11, 1994.

No other changes have been made in either the membership or planned activities of COS. Membership in COS remains open, and COS intends to file additional written notifications disclosing all changes in membership.

On May 14, 1986, COS filed its original notification pursuant to Section 6(a) of the Act. The Department of Justice published a notice in the **Federal Register** pursuant to Section 6(b) of the Act on June 11, 1986 (51 Fed. Reg. 21260).

The last notification was filed with the Department on September 28, 1994. This notice has not yet been published in the **Federal Register**.

Constance K. Robinson,

Director of Operations, Antitrust Division.

[FR Doc. 95–7177 Filed 3–22–95; 8:45 am]

BILLING CODE 4410–01–M

Notice Pursuant to the National Cooperative Research and Production Act of 1993; EHC Technologies Consortium—Electrical Energy—Source Alternatives

Notice is hereby given that, on January 27, 1994, pursuant to section 6(a) of the National Cooperative Research and Production Act of 1993, 15 U.S.C. 4301 *et seq.* (''the Act''), Southwest Research Institute (''SwRI'') has filed written notifications simultaneously with the Attorney General and the Federal Trade Commission disclosing changes in the membership of the ''EHC Technologies Consortium—Electrical Energy-Source Alternatives''. The notifications were filed for the purpose of extending the Act's provisions limiting the recovery of antitrust plaintiffs to actual damages under specified circumstances. Specifically, General Motors Corporation, Delco-Remy Division, Anderson, IN; Nissan Research & Development, Inc., Farmington Hills, MI; and Volvo Car Corporation, Goteborg, SWEDEN have become new members of the project.

No other changes have been made in either the membership or planned activities of the venture. Membership in the group research project remains open, and SwRI intends to file additional written notifications disclosing all changes in membership.

On October 18, 1993, SwRI filed its original notification pursuant to section 6(a) of the Act. The Department of Justice published a notice in the **Federal Register** pursuant to section 6(b) of the Act on January 14, 1994 (59 FR 2438–2439).

Constance K. Robinson,

Director of Operations, Antitrust Division.

[FR Doc. 95–7178 Filed 3–22–95; 8:45 am]

BILLING CODE 4410–01–M

Notice Pursuant to the National Cooperative Research and Production Act of 1993, Bell Communications Research, Inc.

Notice is hereby given that, on December 12, 1994, pursuant to section 6(a) of the National Cooperative Research and Production Act of 1993, 15 U.S.C. 4301 *et seq.* (''the Act''), Bell Communications Research, Inc. (''Bellcore'') has filed written notifications on behalf of Bellcore and PenWare, Inc. (''PenWare'') simultaneously with the Attorney General and the Federal Trade Commission disclosing (1) the identities of the parties and (2) the nature and objectives of the venture. The notifications were filed for the purpose of invoking the Act's provisions limiting the recovery of antitrust plaintiffs to actual damages under specified circumstances. Pursuant to Section 6(b) of the Act, the identities of the parties are Bellcore, Livingston, NJ; and PenWare, Palo Alto, CA. Bellcore and PenWare entered into an agreement effective as of November 9, 1994, to engage in cooperative research to investigate and understand the technologies for wireless data applications and to better understand the feasibility and application of these technologies for exchange and exchange access services, including experimental prototype fabrication for the demonstration of such technologies.

Constance K. Robinson,

Director of Operations, Antitrust Division.

[FR Doc. 95–7179 Filed 3–22–95; 8:45 am]

BILLING CODE 4410–01–M

Notice Pursuant to the National Cooperative Research and Production Act of 1993; Cable Television Laboratories, Inc.

Notice is hereby given that, on December 7, 1994, pursuant to section 6(a) of the National Cooperative Research and Production Act of 1993, 15 U.S.C. 4301 *et seq.* (''the Act''), Cable Television Laboratories, Inc. (''CableLabs'') filed written notifications simultaneously with the Attorney General and the Federal Trade Commission disclosing changes in membership. The notifications were filed for the purpose of extending the Act's provisions limiting the recovery of antitrust plaintiffs to actual damages under specified circumstances. Specifically, the following companies are no longer members of CableLabs: Apollo Cablevision, Inc.; Bluffton Cablevision, Ltd.; and C–TEC Cable Systems.

No other changes have been made in either the membership or planned activity of CableLabs. Membership remains open and CableLabs intends to file additional written notification disclosing all changes in membership.

On September 26, 1994 CableLabs filed its original notification pursuant to section 6(b) of the Act. This notification has not yet been published.

Constance K. Robinson,

Director of Operations, Antitrust Division.

[FR Doc. 95–7180 Filed 3–22–95; 8:45 am]

BILLING CODE 4410–01–M

Notice Pursuant to the National Cooperative Research and Production Act of 1993, Technology Joint Venture

Notice is hereby given that, on January 17, 1995, pursuant to Section 6(a) of the National Cooperative Research and Production Act of 1993, 15 U.S.C. 4301 *et seq.* (''the Act''), Technology Joint Venture has filed written notification simultaneously with the Attorney General and the Federal Trade Commission disclosing (1) the identities of the parties and (2) the nature and objectives of the venture. The notifications were filed for the purpose of extending the Act's provisions limiting the recovery of plaintiffs to actual damages under specified circumstances. Pursuant to section 6(b) of the Act, the identities of the parties are: New Venture Gear, Troy, MI; Premix Incorporated, North Kingsville, OH; Hercules Incorporated, Wilmington, DE; and Quantum Consultants Inc., East Lansing, MI.

The general area of planned activity is to develop, demonstrate and commercialize the use of high performance composite based materials for power transmission systems. The activities of this Technology Joint Venture will be partially funded by an award for the Advanced Technology Program, National Institute of Standards and Technology, Department of Commerce.

Constance K. Robinson,

Director of Operations, Antitrust Division.

[FR Doc. 95–7181 Filed 3–22–95; 8:45 am]

BILLING CODE 4410–01–M

Notice Pursuant to the National Cooperative Research and Production Act of 1993; The ATM Forum

Notice is hereby given that, on November 10, 1994, pursuant to section 6(a) of the National Cooperative Research and Production Act of 1993, 15 U.S.C. 4301 *et seq.* (''the Act''), The ATM Forum (the ''ATM Forum'') filed written notifications simultaneously with the Attorney General and the Federal Trade Commission disclosing changes in its membership. The notifications were filed for the purpose of extending the Act's provisions limiting the recovery of antitrust plaintiffs to actual damages under specified circumstances. Specifically, the identities of the new members of ATM Forum are: Silicon Design Experts, Inc., Morganville, NJ; Summa Four, Inc., Manchester, NH; and Telogy Networks, Inc., Gaithersburg, MD.

No other changes have been made in either the membership or planned activities of ATM Forum. Membership remains open, and the ATM Forum intends to file additional written notifications disclosing all changes in membership.

On April 19, 1993, ATM filed its original notification pursuant to section 6(a) of the Act. The Department of Justice published a notice in the **Federal Register** pursuant to section 6(b) of the Act on June 2, 1993 (58 FR 31415).

The last notification was filed with the Department on August 16, 1994. A notice was published in the **Federal Register** pursuant to section 6(b) of the Act on March 1, 1995 (60 FR 11114).

Constance K. Robinson,

Director of Operations, Antitrust Division.

[FR Doc. 95–7182 Filed 3–22–95; 8:45 am]

BILLING CODE 4410–01–M

Notice of Lodging of Consent Decree

Notice is hereby given that a proposed Consent Decree and Settlement in *United States v. Minnesota Mining and Manufacturing Co.*, Civil Action No. 95–CV–70860–DT (E.D. Mich.), entered into by the United States, and Minnesota Mining and Manufacturing Co. (''3M''), was lodged on March 8, 1995, with the United States District Court for the Eastern District of Michigan. The proposed Consent Decree and Settlement resolves certain claims of the United States under Sections 104 and 107 of the Comprehensive Environmental Response, Compensation, and Liability Act (''CERCLA''), 42 U.S.C. § § 9604 and 9607, with respect to the Montie Drums Site in Belleville, Michigan. Under the Consent Decree, 3M will pay the United States $1,100,000, representing one hundred percent of the government's claims for past response costs. In addition, 3M will pay the United States $50,000 to settle civil penalty claims arising from its alleged failure to fully and accurately respond to information requests from the United States Environmental Protection Agency.

The Department of Justice will receive comments relating to the proposed Consent Decree and Settlement for 30 days following publication of this Notice. Comments should be addressed to the Assistant Attorney General, for the Environment and Natural Resources Division, Department of Justice, P.O. Box 7611, Ben Franklin Station, Washington, D.C. 20044, and should refer to *United States v. Minnesota Mining and Manufacturing Co.*, D.J. Ref. No. 90–11–2–834. The proposed Consent Decree and Settlement may be examined at the Office of the United States Attorney for the Eastern District of Michigan, 211 West Fort Street, Suite 2300 Detroit, MI 48226, the Region V Office of the United States Environmental Protection Agency, 77 West Jackson Boulevard, Chicago, Illinois 60604; and at the Consent Decree Library, 1120 G Street, N.W., 4th Floor, Washington, D.C. 20005, (202) 624–0892. A copy of the proposed Consent Decree may be obtained in person or by mail from the Consent Decree Library, 1120 G Street, N.W., 4th Floor, Washington, D.C. 20005. In requesting a copy, please enclose a check in the amount of $6.00 (25 cents per page for reproduction costs), payable to the Consent Decree Library.

Joel M. Gross,

Acting Chief, Environmental Enforcement Section, Environment and Natural Resources Division.

[FR Doc. 95–7169 Filed 3–22–95; 8:45 am]

BILLING CODE 4410–01–M

Lodging of Consent Decree Under the Clean Air Act

In accordance with the policy of the Department of Justice, 28 CFR § 50.7, notice is hereby given that on March 15, 1995, a proposed Consent Decree in *United States v. California Almond Growers Exchange d/b/a Blue Diamond Growers*, Civil Action No. CIV–S–95–475–LKK–GGH, was lodged with the United States District Court for the Eastern District of California. That action was brought pursuant to the Clean Air Act for Blue Diamond's failure to obtain a new source review permit and a Prevention of Significant Deterioration permit prior to construction of a facility in Sacramento, California, and operation of that facility without the permits and in non-compliance with the Clean Air Act. Pursuant to the Consent Decree, Blue Diamond must either obtain permits for its facility and comply with emissions limits in the consent decree and any permit that is issued, replace the facility in its entirety and comply with the Clean Air Act, or shut the facility down. In addition, Blue Diamond will pay an initial civil penalty of $437,000, and an additional $238,000 penalty if it does not shut down the facility.

As provided in 28 CFR 50.7, the Department of Justice will receive comments from persons who are not named as parties to this action relating to the proposed Consent Decree for a period of thirty days from the date of this publication. Comments should be addressed to the Assistant Attorney General of the Environment and Natural Resources Division, Department of Justice, Washington, D.C. 20530. All

comments should refer to *United States* v. *California Almond Growers Exchange d/b/a Blue Diamond Growers,* D.J. Ref. 90–5–2–1–1679.

The proposed Consent Decree may be examined at the office of the United States Attorney, 650 Capital Mall, Sacramento, California; the Region IX office of the U.S. Environmental Protection Agency, 75 Hawthorne Street, San Francisco, California 94105, and at the Consent Decree Library, 1120 G Street, N.W., 4th Floor, Washington, D.C. 20005, (202) 624–0892. A copy of the proposed Consent Decree may be obtained in person or by mail from the Consent Decree Library, 1120 G Street, N.W., 4th Floor, Washington, D.C. 20005. In requesting a copy, please enclose a check in the amount of $6.50 for a copy of the consent decree (25 cents per page reproduction costs) payable to ''Consent Decree Library.''

Joel M. Gross,

Acting Chief, Environmental Enforcement Section, Environment and Natural Resources Division.

[FR Doc. 95–7170 Filed 3–22–95; 8:45 am]

BILLING CODE 4410–01–M

National Institute of Corrections

Request for Proposals

The National Institute of Corrections, U.S. Department of Justice, is seeking applications from organizations and individuals able to develop and distribute a quarterly newsletter on jail mental health services. A grant of up to $20,000 will be awarded for a 12-month period beginning June 1, 1995. Applications must be received by April 28, 1995. For more information and application procedures, contact Linda Wood, National Institute of Corrections, Jails Division, 1960 Industrial Circle, Suite A, Longmont CO 80501; 1–800–995–6429, ext. 134; or fax 1–303–682–0469.

Morris L. Thigpen,

Director.

[FR Doc. 95–7103 Filed 3–22–95; 8:45 am]

BILLING CODE 4410–36–M

NATIONAL FOUNDATION ON THE ARTS AND THE HUMANITIES

Meeting of Humanities Panel

AGENCY: National Endowment for the Humanities.

ACTION: Notice of meeting.

SUMMARY: Pursuant to the provisions of the Federal Advisory Committee Act (Public Law 92–463, as amended), notice is hereby given that the following meeting of the Humanities Panel will be held at the Old Post Office, 1100 Pennsylvania Avenue, N.W., Washington, D.C. 20506.

FOR FURTHER INFORMATION CONTACT: David C. Fisher, Advisory Committee Management Officer, National Endowment for the Humanities, Washington, D.C. 20506; telephone (202) 660–8322. Hearing-impaired individuals are advised that information on this matter may be obtained by contacting the Endowment's TDD terminal on (202) 606–8282.

SUPPLEMENTARY INFORMATION: The proposed meeting is for the purpose of panel review, discussion, evaluation and recommendation on applications for financial assistance under the National Foundation on the Arts and the Humanities Act of 1965, as amended, including discussion of information given in confidence to the agency by the grant applicants. Because the proposed meeting will consider information that is likely to disclose: (1) Trade secrets and commercial or financial information obtained from a person and privileged or confidential; or (2) information of a personal nature the disclosure of which would constitute a clearly unwarranted invasion of personal privacy, pursuant to authority granted me by the Chairman's Delegation of Authority to Close Advisory Committee meetings, dated July 19, 1993, I have determined that this meeting will be closed to the public pursuant to subsections (c) (4), and (6) of section 552b of Title 5, United States Code.

Date: April 20–21, 1995.
Time: 9:00 a.m. to 5:30 p.m.
Room: 430.
Program: This meeting will review applications for Special Projects program for the March 1995 deadline, submitted to the Division of Public Programs, for projects beginning after July 1, 1995.

David C. Fisher,

Advisory Committee Management Officer.

[FR Doc. 95–7131 Filed 3–22–95; 8:45 am]

BILLING CODE 7536–01–M

NATIONAL SCIENCE FOUNDATION

Opportunity for Public Comment on the Fourth Biennial Revision of the U.S. Arctic Research Plan

In accordance with the Arctic Research and Policy Act of 1984, Pub. L. 98–373, the National Science Foundation announces an Opportunity for Public Comment on the Fourth Biennial Revision of the U.S. Arctic Research Plan.

PURPOSE: Section 109(a) of the Arctic Research and Policy Act requires a biennial revision of the U.S. Arctic Research Plan (due in July 1995). Section 109(a) of the Act further requires the Interagency Arctic Research Policy Committee to consult with a number of groups during development of the Plan. The Interagency Committee and its staff and working groups have prepared a draft revision to the Plan, which will be available for review in the following locations:

Arlington, Virginia: Office of Polar Programs, Room 755, National Science Foundation, 4201 Wilson Boulevard, Arlington, Virginia;
Anchorage, Alaska: The Alaska Resource Library, Federal Building, 222 W. 7th St., 1st Floor;
Juneau, Alaska: The Alaska State Library, State Office Building, 333 Willoughby Avenue, Circulation Desk, 8th Floor;
Fairbanks, Alaska: The Rasmuson Library, University of Alaska, Fairbanks, Reserve Desk.

Representatives of the groups named in section 109(a) of the Act (residents of the Arctic, the private sector and public interest groups) as well as members of the general public, are invited to obtain a copy of the draft revision for review. The biennial revision to the Arctic Research Plan is organized to address research needs in the following area:

1. Arctic Oceans and Marginal Seas;
2. Atmosphere and Climate;
3. Land and Offshore Resources;
4. Land-Atmosphere Interactions;
5. Engineering and Technology;
6. Social Science; and
7. Health.

Coordinated interagency efforts and supporting programs are also discussed. These include research in the Arctic ocean, cultural and natural characteristics of the Bering region, environmental monitoring, arctic contamination studies, data and information, logistics, and international activities.

PUBLIC PARTICIPATION: Comments from representatives of groups named in the Arctic Research and Policy Act are encouraged. Written comments should be submitted to the address below by April 25, 1995.

FOR FURTHER INFORMATION CONTACT: If you would like to review a copy of the draft biennial revision, but are unable to visit one of the above locations, please write to the following address: Arctic Research Staff, National Science Foundation, 4201 Wilson Boulevard, Arlington, Virginia 22230, or call (703) 306–1031, or FAX to (703) 306–0139. Information will be available after March 24, 1995.

COSTS: None.

Charles E. Myers,

Head, Arctic Staff, National Science Foundation.

[FR Doc. 95–7096 Filed 3–22–95; 8:45 am]

BILLING CODE 7555–01–M

NUCLEAR REGULATORY COMMISSION

[Docket No. 50–410]

Niagara Mohawk Power Corp.; Notice of Consideration of Issuance of Amendment To Facility Operating License, Proposed No Significant Hazards Consideration Determination, and Opportunity for a Hearing

The U.S. Nuclear Regulatory Commission (the Commission) is considering issuance of an amendment to Facility Operating License No. NPF–69 issued to Niagara Mohawk Power Corporation (the licensee) for operation of the Nine Mile Point Nuclear Station, located in Oswego County, New York.

The proposed amendment would revise the Nine Mile Point Nuclear Station, Unit 2, Technical Specifications (TSs). Specifically, TS 4.6.1.2. a would be modified to allow the second Primary Containment Integrated Leakage Rate Test (Type A) to be performed at the fifth refueling outage (RF–05) or 72 months after the first Type A test instead of the fourth refueling outage (RF–04) as currently scheduled.

Before issuance of the proposed license amendment, the Commission will have made findings required by the Atomic Energy Act of 1954, as amended (the Act) and the Commission's regulations.

The Commission has made a proposed determination that the amendment request involves no significant hazards consideration. Under the Commission's regulations in 10 CFR 50.92, this means that operation of the facility in accordance with the proposed amendment would not (1) involve a significant increase in the probability or consequences of an accident previously evaluated; or (2) create the possibility of a new or different kind of accident from any accident previously evaluated; or (3) involve a significant reduction in a margin of safety. As required by 10 CFR 50.91(a), the licensee has provided its analysis of the issue of no significant hazards consideration, which is presented below:

1. The operation of Nine Mile Point Unit 2, in accordance with the proposed amendment, will not involve a significant increase in the probability or consequences of an accident previously evaluated.

The proposed change for performance of the second Type A test until RF–05 does not increase the probability of a previously analyzed accident occurring. Primary containment leakage is not the precursor to any analyzed event. Type A testing is done to confirm the ability of the primary containment to limit leakage consistent with the safety analysis assumptions. Therefore, a change in the test interval will not result in an increase in the probability of an accident previously analyzed. This has also been confirmed by the risk assessment described above [in amendment proposal].

Extension of the second Type A test will not affect the containment's ability to maintain leakage below that assumed in the safety analysis. The previous Type A test was completed successfully, and there have been no plant modifications (other than those that required Type B or C testing) since the last test which could directly affect the test results. Type B and C testing of individual penetrations has been satisfactory and will continue to be performed in accordance with the Technical Specifications. There have been no pressure or temperature excursions in the containment which could have adversely affected containment integrity. Hence, the ability of the containment to maintain leakage within the Type A test limits will be maintained. This testing provides assurance that the consequences of radioactive leakage area within 10CFR100 and GDC–19 limits. Therefore, the proposed change will not involve a significant increase in the consequences of an accident previously evaluated.

2. The operation of Nine Mile Point Unit 2, in accordance with the proposed amendment, will not create the possibility of a new or different kind of accident from any accident previously evaluated.

The proposed change for performance of the second Type A test until RF–05 will not affect the test methodology or acceptance criteria nor does it alter the physical containment structure or boundary in any way. There will be no addition or removal of plant hardware. No new plant operating modes are being introduced. The primary containment will continue to perform its accident mitigation function of minimizing leakage of radioactivity to the secondary containment. Results of the previous Type A tests are well below allowable limits, and there have been no plant modifications since the last test nor are any planned that could directly impact the previous Type A test results. The primary containment performs a mitigation function and is not an initiator of any analyzed event. A risk assessment was performed which indicates that deferral of the Type A ILRT will not result in any new accident scenarios.

Therefore, the proposed change will not create the possibility of a new or different accident from any previously evaluated.

3. The operation of Nine Mile Point Unit 2, in accordance with the proposed amendment, will not involve a significant reduction in a margin of safety.

Safety margins are established through the Nine Mile Point Unit 2 safety analyses as reflected in the Technical Specification Limiting Conditions for Operation. Containment leak rates assumed in the safety analyses are not increased by the proposed change to the surveillance interval. The acceptance criteria which must be met to verify that leak rates remain within assumed values will also not be changed.

Although the interval between the first and second Type A tests is 72 months, no plant modifications have been made nor are planned which would invalidate past leak test results which confirm acceptable containment integrity. Furthermore, Type B and C testing of individual penetrations has been satisfactory and will continue to be performed in accordance with the Technical Specifications to assure that containment integrity is maintained.

Therefore, the proposed change will not involve a significant reduction in a margin of safety.

The NRC staff has reviewed the licensee's analysis and, based on this review, it appears that the three standards of 10 CFR 50.92(c) are satisfied. Therefore, the NRC staff proposes to determine that the amendment request involves no significant hazards consideration.

The Commission is seeking public comments on this proposed determination. Any comments received within 30 days after the date of publication of this notice will be considered in making any final determination.

Normally, the Commission will not issue the amendment until the expiration of the 30-day notice period. However, should circumstances change during the notice period such that failure to act in a timely way would result, for example, in derating or shutdown of the facility, the Commission may issue the license amendment before the expiration of the 30-day notice period, provided that its final determination is that the amendment involves no significant hazards consideration. The final determination will consider all public and State comments received. Should the Commission take this action, it will publish in the **Federal Register** a notice of issuance and provide for opportunity for a hearing after issuance. The Commission expects that the need to take this action will occur very infrequently.

Written comments may be submitted by mail to the Rules Review and Directives Branch, Division of Freedom of Information and Publications Services, Office of Administration, U.S. Nuclear Regulatory Commission, Washington, DC 20555, and should cite the publication date and page number of this **Federal Register** notice. Written comments may also be delivered to Room 6D22, Two White Flint North, 11545 Rockville Pike, Rockville,

Maryland, from 7:30 a.m. To 4:15 p.m. Federal workdays. Copies of written comments received may be examined at the NRC Public Document Room, the Gelman Building, 2120 L Street, NW., Washington, DC.

The filing of requests for hearing and petitions for leave to intervene is discussed below.

By April 24, 1995, the licensee may file a request for a hearing with respect to issuance of the amendment to the subject facility operating license and any person whose interest may be affected by this proceeding and who wishes to participate as a party in the proceeding must file a written request for a hearing and a petition for leave to intervene. Requests for a hearing and a petition for leave to intervene shall be filed in accordance with the Commission's ''Rules of Practice for Domestic Licensing Proceedings'' in 10 CFR Part 2. Interested persons should consult a current copy of 10 CFR 2.714 which is available at the Commission's Public Document Room, the Gelman Building, 2120 L Street, NW., Washington, DC, and at the local public document room located at the Reference and Documents Department, Penfield Library, State University of New York, Oswego, New York. If a request for a hearing or petition for leave to intervene is filed by the above date, the Commission or an Atomic Safety and Licensing Board, designated by the Commission or by the Chairman of the Atomic Safety and Licensing Board Panel, will rule on the request and/or petition; and the Secretary or the designated Atomic Safety and Licensing Board will issue a notice of hearing or an appropriate order.

As required by 10 CFR 2.714, a petition for leave to intervene shall set forth with particularity the interest of the petitioner in the proceeding, and how that interest may be affected by the results of the proceeding. The petition should specifically explain the reasons why intervention should be permitted with particular reference to the following factors: (1) The nature of the petitioner's right under the Act to be made party to the proceeding; (2) the nature and extent of the petitioner's property, financial, or other interest in the proceeding; and (3) the possible effect of any order which may be entered in the proceeding on the petitioner's interest. The petition should also identify the specific aspect(s) of the subject matter of the proceeding as to which petitioner wishes to intervene. Any person who has filed a petition for leave to intervene or who has been admitted as a party may amend the petition without requesting leave of the Board up to 15 days prior to the first prehearing conference scheduled in the proceeding, but such an amended petition must satisfy the specificity requirements described above.

Not later than 15 days prior to the first prehearing conference scheduled in the proceeding, a petitioner shall file a supplement to the petition to intervene which must include a list of the contentions which are sought to be litigated in the matter. Each contention must consist of a specific statement of the issue of law or fact to be raised or controverted. In addition, the petitioner shall provide a brief explanation of the bases of the contention and a concise statement of the alleged facts or expert opinion which support the contention and on which the petitioner intends to rely in proving the contention at the hearing. The petitioner must also provide references to those specific sources and documents of which the petitioner is aware and on which the petitioner intends to rely to establish those facts or expert opinion. Petitioner must provide sufficient information to show that a genuine dispute exists with the applicant on a material issue of law or fact. Contentions shall be limited to matters within the scope of the amendment under consideration. The contention must be one which , if proven, would entitle the petitioner to relief. A petitioner who fails to file such a supplement which satisfies these requirements with respect to at least one contention will not be permitted to participate as a party.

Those permitted to intervene become parties to the proceeding, subject to any limitations in the order granting leave to intervene, and have the opportunity to participate fully in the conduct of the hearing, including the opportunity to present evidence and cross-examine witnesses.

If a hearing is requested, the Commission will make a final determination on the issue of no significant hazards consideration. The final determination will serve to decide when the hearing is held.

If the final determination is that the amendment request involves no significant hazards consideration, the Commission may issue the amendment and make it immediately effective, notwithstanding the request for a hearing. Any hearing held would take place after issuance of the amendment.

If the final determination is that the amendment request involves a significant hazards consideration, any hearing held would take place before the issuance of any amendment.

A request for a hearing or a petition for leave to intervene must be filed with the Secretary of the Commission, U.S. Nuclear Regulatory Commission, Washington, DC 20555, Attention: Docketing and Services Branch, or may be delivered to the Commission's Public Document Room, the Gelman Building, 2120 L Street, NW., Washington, DC, by the above date. Where petitions are filed during the last 10 days of the notice period, it is requested that the petitioner promptly so inform the Commission by a toll-free telephone call to Western Union at 1–(800) 248–5100 (in Missouri 1–(800) 342–6700). The Western Union operator should be given Datagram Identification Number N1023 and the following message addressed to Ledyard B. Marsh: petitioner's name and telephone number, date petition was mailed, plant name, and publication date and page number of this **Federal Register**. A copy of the petition should also be sent to the Office of the General Counsel, U.S. Nuclear Regulatory Commission, Washington, DC 20555, and to Mark J. Wetterhahn, Esquire, Winston & Strawn, 1400 L Street, NW., Washington, DC 20005–3502, attorney for the licensee.

Nontimely filings of petitions for leave to intervene, amended petitions, supplemental petitions and/or requests for hearing will not be entertained absent a determination by the Commission, the presiding officer or the presiding Atomic Safety and Licensing Board that the petition and/or request should be granted based upon a balancing of the factors specified in 10 CFR 2.714(a)(1)(i)–(v) and 2.714(d).

For further details with respect to this action, see the application for amendment dated March 9, 1995, which is available for public inspection at the Commission's Public Document Room, the Gelman Building, 2120 L Street, NW., Washington, DC, and at the local public document room located at the Reference and Documents Department, Penfield Library, State University of New York, Oswego, New York 13126.

Dated at Rockville, Maryland, this 17th day of March 1995.

For the Nuclear Regulatory Commission.

Gordon E. Edison,

Senior Project Manager, Project Directorate 1–1, Division of Reactor Projects—I/II, Office of Nuclear Reactor Regulation.

[FR Doc. 95–7185 Filed 3–22–95; 8:45 am]

BILLING CODE 7590–01–M

Atomic Safety and Licensing Board Panel; Advanced Medical Systems, Inc., Cleveland, Ohio; Correction

[Docket No. 30–16055–ML–Ren; ASLBP No. 95–707–02–ML–Ren (Source Material License No. 34–19089–01)]

March 17, 1995.

In the Notice of Hearing, issued March 13, 1995, published at 60 FR 14467, March 17, 1995, a reference is made on page 14467 to a Memorandum and Order, dated March 10, 1995. That date should be March 13, 1995.

Dated: March 17, 1995.

Marshall E. Miller,

Presiding Officer, Administrative Judge.

[FR Doc. 95–7184 Filed 3–22–95; 8:45 am]

BILLING CODE 7590–01–M

Draft NUREG; Issuance, Availability

The Nuclear Regulatory Commission (NRC) has developed a draft guideline document for the review of advanced control room designs and advanced human-system interfaces that may be located within conventional control rooms. This is being issued as Draft Revision 1 to NUREG–0700, ''Human System Interface Design Review Guideline,'' which is the successor to, and integrates relevant sections of, the current guidance used by the staff, NUREG–0700 (1981), ''Guidelines for Control Room Design Reviews.''

Draft Revision 1 to NUREG–0700 is not a backfit and does not impose new requirements on current plants. It is not a generic communication that proposes a new staff position or seeks additional licensee commitments. This document would not apply to licensees under 10 CFR Part 50 for the review of human-system interfaces unless the licensee initiated a voluntary upgrade.

Draft Revision 1 to NUREG–0700 has been developed to apply primarily to advanced reactors. New plant designs, submitted to the NRC for review and approval under 10 CFR 52.47(a)(1)(ii), must meet 10 CFR 50.34(f)(2)(iii), which requires a ''control room design that reflects state-of-the-art human factors principles.'' Revision 1 to NUREG–0700 will be used by the staff as part of the comprehensive human factors engineering review process for advanced reactors described in the ''Human Factors Engineering Program Review Model,'' NUREG–0711 (July 1994).

Draft Revision 1 to NUREG–0700 is consistent with a previously established Commission position in that it does not include generic design certification communications or generic decisions for future plants (see SECY–92–224, June 22, 1992). The NUREG itself is not mandatory. Rather, the guidelines contained within it represent good human factors engineering practice based upon state-of-the-art research and validated review criteria developed in the nuclear industry as well as in other fields, primarily military and aerospace. The draft guidelines have been subjected to extensive independent peer review by subject matter experts as part of their development.

The Commission encourages comment from all interested parties, and specifically from facilities licensed under 10 CFR Part 50, with regard to the staff's contention that no backfitting is intended for current licensees with the issuance of this guidance document unless a licensee initiates a voluntary upgrade to its human-system interface.

The comment period expires May 15, 1995. Comments received after this date will be considered if it is practical to do so, but the Commission is able to assure consideration only for comments received before this date.

Mail comments to: Chief, Rules Review and Directives Branch, Division of Freedom of Information and Publication Services, Mail Stop T–6D59, U.S. Nuclear Regulatory Commission, Washington, DC 20555–0001. Comments may be hand-delivered to 11545 Rockville Pike, Maryland, between 7:45 a.m. and 4:15 p.m. on Federal workdays.

Comments may be submitted electronically, in either ASCII text or Workperfect format (version 5.1 or later), by calling the NRC Electronic Bulletin Board on FedWorld. The bulletin board may be accessed using a personal computer, a modem, and one of the commonly available communications software packages, or directly via Internet.

If using a personal computer and modem, the NRC subsystem on FedWorld can be accessed directly by dialing the toll free number 1–800–303–9672. Communication software parameters should be set as follows: parity to none, data bits to 8, and stop bits to 1 (N,8,1). Using ANSI or VT–100 terminal emulation, the NRC NUREGs and RegGuides for Comment subsystem can then be accessed by selecting the ''Rules Menu'' option from the ''NRC Main Menu.'' For further information about options available for NRC at FedWorld, consult the ''Help/Information Center'' from the ''NRC Main Menu.'' Users will find the ''FedWorld Online User's Guides'' particularly helpful. Many NRC subsystems and databases also have a ''Help/Information Center'' option that is tailored to the particular subsystem.

The NRC subsystem on FedWorld can also be accessed by a direct dial phone number for the main FedWorld BBS, 703–321–8020, or by using Telnet via Internet, fedworld.gov. If using 703–321–8020 to contact FedWorld, the NRC subsystem will be accessed from the main FedWorld menu by selecting the ''Regulatory, Government Administration and State Systems,'' then selecting ''Regulatory Information Mall.'' At the point, a menu will be displayed that has an option ''U.S. Nuclear Regulatory Commission'' that will take you to the NRC Online main menu. The NRC Online area also can be accessed directly by typing ''/go nrc'' at a FedWorld command line. If you access NRC from FedWorld's main menu, you may return to FedWorld by selecting the ''Return to FedWorld'' option from the NRC Online Main Menu. However, if you access NRC at FedWorld by using NRC's toll-free number, you will have full access to all NRC systems but you will not have access to the main FedWorld system.

If you contact FEDWORLD using Telnet, you will see the NRC area and menus, including the Rules menu. Although you will be able to download documents and leave messages, you will not be able to write comments or upload files (comments). If you contact FEDWORLD using FTP, all files can be accessed and downloaded but uploads are not allowed; all you will see is a list of files without descriptions (normal Gopher look). An index file listing all files within a subdirectory, with descriptions, is included. There is a 15-minute time limit for FTP access.

Although FEDWORLD can be accessed through the World Wide Web, like FTP that mode only provides access for downloading files and does not display the NRC Rules menu.

For more information on NRC bulletin boards, call Mr. Arthur Davis, Systems Integration and Development Branch, U.S. Nuclear Regulatory Commission, Washington, DC 20555, telephone (301) 415–5780; e-mail AXD3@nrc.gov.

NUREGs are available for inspection at the Commission's Public Document Room, 2120 L Street NW., Washington, DC. Requests for single copies of NUREGs (which may be reproduced) should be made in writing to the U.S. Nuclear Regulatory Commission, Washington, DC 20555, Attention: Distribution and Mail Services Section. Telephone requests cannot be accommodated. NUREGs are not copyrighted, and Commission approval is not required to reproduce them.

FOR FURTHER INFORMATION CONTACT: Jerry Wachtel, Office of Nuclear Regulatory

Research, U.S. Nuclear Regulatory Commission, Washington, DC 20555, telephone (301) 415–6498; e-mail jxw4@nrc.gov.

Dated at Rockville, Maryland, this 2nd day of March 1995.

For the Nuclear Regulatory Commission.

Franklin D. Coffman, Jr.,

Chief, Control, Instrumentation & Human Factors Branch, Division of Systems Technology, Office of Nuclear Regulatory Research.

[FR Doc. 95–7186 Filed 3–22–95; 8:45 am]

BILLING CODE 7590–01–M

SECURITIES AND EXCHANGE COMMISSION

[Rel. No. IC–20961; No. 812–9302]

Jackson National Life Insurance Company, et al.

March 17, 1995.

AGENCY: Securities and Exchange Commission (''SEC'' or ''Commission'').

ACTION: Notice of application for an order under the Investment Company Act of 1940 (''1940 Act'').

APPLICANTS: Jackson National Life Insurance Company (''Jackson National''), Jackson National Separate Account–I (''Separate Account'') and Jackson National Financial Services, Inc. (''Services'').

RELEVANT 1940 ACT SECTIONS: Order requested under Section 6(c) of the 1940 Act granting exemptions from the provisions of Sections 26(a)(2)(C) and 27(c)(2) of the 1940 Act.

SUMMARY OF APPLICATION: Applicants seek an order to permit the deduction of a mortality and expense risk charge from the assets of the Separate Account or any other separate account (''Other Accounts'') established by Jackson National to support certain flexible premium individual deferred variable annuity contracts (''Contracts'') as well as other variable annuity contracts that are substantially similar in all material respects to the Contracts (''Future Contracts'').

FILING DATE: The application was filed on October 21, 1994, and was amended and restated on December 29, 1994.

HEARING OR NOTIFICATION OF HEARING: An order granting the Application will be issued unless the Commission orders a hearing. Interested persons may request a hearing by writing to the SEC's Secretary and serving Applicants with a copy of the request, personally or by mail. Hearing requests should be received by the SEC by 5:30 p.m. on April 11, 1995, and should be accompanied by proof of service on Applicants in the form of an affidavit or, for lawyers, a certificate of service. Hearing requests should state the nature of the requestor's interest, the reason for the request, and the issues contested. Persons may request notification of a hearing by writing to the Secretary of the SEC.

ADDRESSES: Secretary, Securities and Exchange Commission, 450 5th Street NW., Washington, D.C. 20549. Applicants, Thomas J. Meyer, Esq., 5901 Executive Drive, Lansing, Michigan 48911.

FOR FURTHER INFORMATION CONTACT: Pamela K. Ellis, Attorney, or Wendy F. Friedlander, Deputy Chief, both at (202) 942–0670, Office of Insurance Products (Division of Investment Management).

SUPPLEMENTARY INFORMATION: Following is a summary of the Application; the complete Application is available for a fee from the SEC's Public Reference Branch.

Applicants' Representations

1. Jackson National, a stock life insurance company, is organized in Michigan and licensed to do business in the District of Columbia and all states except Maine and New York. Jackson National is an indirect wholly-owned subsidiary of Prudential Corporation plc, London, England.

2. The Separate Account is a separate account established by Jackson National to fund the Contracts. The Separate Account is registered with the Commission as a unit investment trust under the 1940 Act and the Contracts are registered as securities under the Securities Act of 1933.

3. Jackson National will establish for each investment option offered under the Contract a Separate Account subaccount or portfolio (''Subaccount''), which will invest solely in a specific corresponding series of the JNL Series Trust or of some other designated investment company (''Funds''). The Funds will be registered under the 1940 Act as open-end management investment companies. Each Fund series will have separate investment objectives and policies.

4. Services will serve as the distributor and principal underwriter of the Contracts. Services, a wholly owned subsidiary of Jackson National, is registered under the Securities Exchange Act of 1934 as a broker-dealer and is a member of the National Association of Securities Dealers, Inc.

5. The Contracts are flexible premium individual deferred variable annuity contracts. They may be purchased on a non-tax qualified basis (''Non-Qualified Contracts'') or they may be purchased and used in connection with retirement plans that qualify for favorable federal income tax treatment (''Qualified Contracts''). The Non-Qualified Contracts may be purchased with an initial premium of $5,000 and the Qualified Contracts may be purchased with an initial premium of $2,000. The minimum subsequent premium for both the Unqualified and Qualified Contracts is $500 (or $50 if made in connection with an automatic payment plan).[1] Premiums may be allocated to one or more of the Separate Account Subaccounts that have been established to support the Contracts. The Contracts also provide for the allocation of premiums to the general account of Jackson National, where such premiums are credited with a predetermined fixed rate of interest.

6. The Contracts provide for a series of annuity payments beginning on the annuity date. Several annuity forms are available under the Contracts.

7. The Contracts provide for a death benefit if the annuitant dies during the accumulation period. The standard death benefit is the greater of: (1) The Contract value at the end of the valuation period;[2] or (2) the total dollar amount of premiums made prior to the annuitant's death, minus the sum of any partial withdrawals and premium taxes incurred. Where permitted by state law, Jackson National will provide an enhanced death benefit. This benefit is determined by recomputing the total dollar amounts under (2) above annually at 5% (4% if the annuitant was age 70 or older on the issue date) to the date of death, and paying the greater of the amount so determined and the following amount, which is deemed to be $0 if the annuitant dies prior to the seventh Contract year: the Contract value at the seventh Contract year, plus any premiums made since that time and before the death of the annuitant, minus the sum of the total amount of partial withdrawals since the seventh year and premium taxes incurred since the seventh year, all accumulated annually at 5% (4% if the annuitant was age 70 or older on the issue date) to the date of death. However, the enhanced death benefit shall not exceed 250% of all premiums paid under a Contract,

[1] Jackson National may waive the minimum premiums at any time.

[2] Applicants define the valuation period as the period commencing at the close of normal trading on each day the New York Stock Exchange (''NYSE'') is open for business. (''Valuation Date'') and ending at the close of the NYSE on the next succeeding Valuation Date.

reduced by the amount of any partial withdrawals.

8. Certain charges and fees are assessed under the Contracts. During the accumulation and annuity periods, amounts allocated to the Separate Accounts may be transferred among Subaccounts. Prior to the annuity date, transfers from the Separate Account to the fixed account and, to a limited extent, from the fixed account to the Separate Account, also are permitted. There is no transfer fee charged for the first 15 transactions effecting transfers in any Contract year. Subsequent transfers within a Contract year, however, will be assessed a fee of $25 per transfer. This fee will be deducted from Contract values that remain in the Subaccount from which the transfer was made. If these Contract values are insufficient to pay the transfer fee, the fee will be deducted from transferred Contract values. The transfer fee is at cost with no anticipation of profit.

9. A contingent deferred sales charge (''CDSC'') may be imposed on certain withdrawals. The amount of the CDSC decreases annually from 7% to 0% over 8 Contract years. The CDSC is deducted from the remaining Contract value. For the purposes of determining the CDSC withdrawals will be allocated first to investment income, if any (which may generally be withdrawn free of the CDSC), and then to premiums on a first-in, first-out basis so that all withdrawals are allocated to premiums to which the lowest (if any) CDSC applies. In addition, there may be a free withdrawal amount for the first withdrawal during a Contract year. This withdrawal amount is equal to 10% of premiums that remain subject to the CDSC, less earnings in the owner's account.[3]

10. During the valuation period, Jackson National will deduct an administration charge from each Subaccount of the Separate Account. The charge is equal, on an annual basis, to .15% of the net asset value of each Subaccount. The administration charge is designed to compensate Jackson National for assuming administrative expenses related to the Separate Account and the issuance and maintenance of the Contracts.

11. An annual contract maintenance charge of $35 will be charged against each Contract. The contract maintenance charge will be assessed each anniversary of the Contract date that occurs on or prior to the annuity date. In the event that a total surrender of the Contract value is made other than on such anniversary, the charge will be assessed as of the date of surrender without assert that this charge reimburses Jackson National for the expenses incurred in establishing and maintaining records relating to the Contracts.

12. Applicants represent that the administration charge and the contract maintenance charge will not increase regardless of the actual cost incurred. In addition, Applicants represent that these charges are at cost with no anticipation of profit. Applicants rely on Rule 26(a)(1) of the Act to deduct the transfer fee, the CDSC, the administration charge and the contract maintenance charge.[4]

13. Jackson National proposes to deduct a mortality and expense risk charge from each Subaccount during each valuation period. Jackson National represents that the aggregate mortality and expense risk charge is equal, on an annual basis, to 1.25% of the net asset value on each Subaccount. Of this amount, approximately 1.02% is for mortality risks (of which .90% is for the standard death benefit and .12% is assessed for the enhanced death benefit) and .23% is for expense risks.

14. Jackson National assumes the mortality risk that the life expectancy of the annuitant will be greater than that assumed in the guaranteed annuity purchase rates, thus requiring Jackson National to pay out more in annuity income than it had planned. Additional mortality risks assumed by Jackson National are that it will waive the CDSC in the event of the death of the owner and Jackson National's contractual obligation to provide a standard and an enhanced death benefit prior to the annuity date. Thus, Jackson National assumes the risk that it may not be able to cover its distribution expenses and that the owner may die at a time when the amount of the death benefit payable exceeds the then net surrender value of the Contracts. The expense risk assumed by Jackson National is that the contract administration charge will be insufficient to cover the cost of administering the Contracts.

15. In the event the mortality and expense risk charges are more than sufficient to cover Jackson National's costs and expenses, any excess will be a profit to Jackson National. Any profit realized by these charges may be used by Jackson National to, among other things, offset losses experienced when the mortality and expense risk charges are insufficient. These charges may not be increased under the Contracts.

16. Should the owner live in a jurisdiction that levies a premium tax, Jackson National will pay the taxes when due. Jackson National represents that state premium taxes may range up to 3.5% to purchase payments and are subject to change. Jackson National reserves the right to deduct the amount of the tax either from the premiums as they are received or deduct the tax at a later date as permitted or required by applicable law.

Applicants' Legal Analysis

1. Section 6(c) of the 1940 Act authorizes the Commission, by order upon application, to conditionally or unconditionally grant an exemption from any provision, rule or regulation of the 1940 to the extent that the exemption is necessary or appropriate in the public interest and consistent with the protection of investors and the purposes fairly intended by the policy and provisions of the 1940 Act.

2. Sections 26(a)(2)(C) and 27(c)(2) of the 1940, in relevant part, prohibit a registered unit investment trust, its depositor or principal underwriter, from selling periodic payment plan certificates unless the proceeds of all payments, other than sales loads, are deposited with a qualified bank and held under arrangements which prohibit any payment to the depositor or principal underwriter except a reasonable fee, as the Commission may prescribe, for performing bookkeeping and other administrative duties normally performed by the bank itself.

3. Applicants request exemptions from Sections 26(a)(2)(C) and 27(c)(2) of the 1940 Act to the extent necessary to permit the deduction from the assets of the Separate Account and the Other Accounts in connection with the Contracts and Future Contracts of the 1.25% charge for the assumption of mortality and expense risks. Applicants assert that the terms of the relief requested with respect to any Future Contracts funded by the Separate Account or Other Accounts are consistent with the standards enumerated in Section 6(c) of the 1940 Act. Without the requested relief, Applicants would have to request and obtain exemptive relief for each new Other Account it establishes to fund any Future Contract. Applicants submit that any such additional request for exemption would present no issues under the 1940 Act that have not already been addressed in this application, and that investors would

[3] Jackson National states that it may waive the CDSC under certain circumstances.

[4] Applicants represent that, during the notice period, the application will be amended to reflect this representation.

not receive any benefit or additional protections thereby.[5]

Applicants submit that the requested relief is appropriate in the public interest, because it would promote competitiveness in the variable annuity contract market by eliminating the need for Applicants to file redundant exemptive applications, thereby reducing their administrative expenses and maximizing the efficient use of their resources. The delay and expense involved in having repeatedly to seek exemptive relief would reduce Applicants' ability effectively to take advantage of business opportunities as they arise.

Applicants further submit that the requested relief is consistent with the purposes of the 1940 Act and the protection of investors for the same reasons.

Applicants thus believe that the requested exemption is appropriate in the public interest and consistent with the protection of investors and the purposes fairly intended by the policy and provisions of the 1940 Act.

4. Applicants represent that the 1.25% per annum mortality and expense risk charge is within the range of industry practice for comparable annuity contracts. This representation is based upon an analysis of publicly available information about similar industry products, taking into consideration such factors as, among others, the current charge levels and benefits provided, the existence of expense charge guarantees and guaranteed annuity rates. Jackson National will maintain at its principal offices, available to the Commission, a memorandum setting forth in detail the products analyzed in the course of, and the methodology and results of, Applicants' comparative review.

5. Jackson National has concluded that there is a reasonable likelihood that the Separate Accounts' proposed distribution financing arrangements will benefit the Separate Accounts and their investors. Jackson National represents that it will maintain and make available to the Commission upon request a memorandum setting forth the basis of such conclusion.

6. The Separate Accounts will be invested only in management investment companies that undertake, in the event the company should adopt a plan for financing distribution expenses pursuant to rule 12b–1 under the 1940 Act, to have such plan formulated and approved by the company's board members, the majority of whom are not ''interested persons'' of the management investment company within the meaning of Section 2(a)(19) of the 1940 Act.

[5] Applicants represent that, during the Notice Period, the application will be amended to reflect this representation.

Conclusion

For the reasons set forth above, Applicants represent that the exemptions requested are necessary and appropriate in the public interest and consistent with the protection of investors and the purposes fairly intended by the policy and provisions of the 1940 Act.

For the Commission, by the Division of Investment Management, pursuant to delegated authority.

Margaret H. McFarland,

Deputy Secretary.

[FR Doc. 95–7139 Filed 3–22–95; 8:45 am]

BILLING CODE 8010–01–M

[Release No. 34–35502; File No. SR–PSE–94–27]

Self-Regulatory Organizations; The Pacific Stock Exchange Incorporated; Order Approving Proposed Rule Change Relating to Implementation of a Three-Day Settlement Standard

March 16, 1995.

On December 19, 1994, The Pacific Stock Exchange Incorporated (''PSE'') filed a proposed rule change (File No. SR–PSE–94–27) with the Securities and Exchange Commission (''Commission'') pursuant to Section 19(b) of the Securities Exchange Act of 1934 (''Act'').[1] Notice of the proposal was published in the **Federal Register** on January 12, 1995 to solicit comments from interested persons.[2] The Commission received one written comment.[3] As discussed below, this order approves the proposed rule change.

I. Description

In October 1993, the Commission adopted Rule 15c6–1 under the Act[4] which establishes three business days after the trade date (''T+3''), instead of five business days (''T+5''), as the standard settlement cycle for most securities transactions. The rule will become effective June 7, 1995.[5] Several of the PSE's rules are interrelated with the standard settlement time frame. The purpose of the proposed rule change is to amend PSE's rules to be consistent with a T+3 settlement standard for securities transactions.

Under PSE Rule 5.7, transactions in stocks traded ''regular'' will be ''ex-dividend'' or ''ex-rights,'' as the case may be, on the second business day preceding the record date fixed by the company or the date of the closing of transfer books, except when PSE's board of directors rules otherwise. Rule 5.7 also provides that should such record date or such closing of transfer books occur upon a day other than a business day, this rule applies for the third preceding business day.

Under Rule 5.9(a)(2), transactions in securities admitted to dealings on an ''issued'' basis settling ''regular way'' will be for delivery on the third business day following the day of the contract. Rule 5.9(a)(3) provides that transactions on a ''seller's option'' basis will be made for delivery at the option of the seller within the time specified in the option, which time may not be less than four business days following the date of the contract. Rule 5.9(a)(4) provides that transactions in rights and warrants may be made on a ''next day'' basis only during the three business days preceding the final day for trading therein.

Rule 9.12(a)(4) requires that no member organization may grant delivery versus payment (''DVP'') or receipt versus payment (''RVP'') privileges to a customer without obtaining an agreement from the customer to provide instructions to its agent no later than the second day after the trade date for RVP trades or no later than the first business day after trade date for DVP trades.

PSE has requested that the proposed rule change become effective on the same date as Rule 15c6–1. Rule 15c6–1 will become effective on June 7, 1995.[6]

II. Written Comment

The Commission received one comment letter from Thomson Trading Services, Inc. (''Thomson'') suggesting that additional regulatory changes may be necessary to implement T+3

[1] 15 U.S.C. § 78s(b) (1988).

[2] Securities Exchange Act Release No. 35193 (January 4, 1995), 60 FR 3015.

[3] Letter from P. Howard Edelstein, President, Electronic Settlements Group, Thomson Trading Services, Inc., to Jonathan G. Katz, Secretary, Commission (February 1, 1995).

[4] 17 CFR 240.15c6–1 (1994).

[5] Securities Exchange Act Release Nos. 33023 (October 6, 1993), 58 FR 52891 (order adopting Rule 15c6–1 and 34952 (November 9, 1994), 59 FR 59137 (changing effective date from June 1, 1995, to June 7, 1995).

[6] The transition from five day settlement to three day settlement will occur over a four day period. Friday, June 2, will be the last trading day with five business day settlement. Monday, June 5, and Tuesday, June 6, will be trading days with four business day with three business day settlement. As a result, trades from June 2 and June 5 will settle on Friday, June 9. Trades from June 6 and June 7 will settle on Monday, June 12.

settlement.[7] Thomas believes that the PSE should amend Rule 9.12(a)(5) which requires the use of the facilities of a registered securities depository for confirmation and acknowledgement of all transaction in depository-eligible securities.

III. Discussion

The Commission believes the proposal is consistent with the requirements of Section 6 of the Act.[8] Specifically, Section 6(b)(5) states that the rules of the exchange must be designed to foster cooperation and coordination with persons engaged in regulating, clearing, settling, and processing information. The PSE rules and other self-regulatory organizations' rules currently establish the standard time frame for settlement of securities transactions. On June 7, 1995, the new settlement cycle of T+3 will be established as mandated by the Commission's Rule 15cb–1. As a result, the PSE's current rule providing for a T+5 settlement cycle will be inconsistent with the Commission rule. This proposal will amend the PSE's rules to harmonize them with the Commission's Rule 15cb–1 and a T+3 settlement cycle.

In addition, the Commission believes that the proposed rule change is consistent with Section 6(b)(5) of the Act in that it protects investors and the public interest by reducing risks to clearing corporations, their members, and public investors which are inherent in settling securities transactions. The reduction of the time period for settlement of most securities transactions will correspondingly decrease the number of unsettled trades in the clearance and settlement system at any given time. Thus, fewer unsettled trades will be subject to credit and market risk, and there will be less time between trade execution and settlement for the value of those trades to deteriorate.[9]

While Thomson's letter supports the PSE's efforts to shorten the settlement cycle for securities transactions, Thomson believes that the PSE should amend Rule 9.12(a)(5), which requires the use of the facilities of a registered securities depository for the confirmation and acknowledgement of all transactions in depository-eligible securities where payment for securities purchased or delivery of securities sold is to be made by or to an agent of the customer. The Commission believes that the issue raised by the Thomson letter need not be resolved prior to the approval of the proposed rule change. Discussions regarding Thomson's concerns are underway among the Commission, Thomson, and DTC. DTC has submitted a rule filing that will establish a linkage between DTC and vendors such as Thomson.[10] The Commission intends to consider whether self-regulatory organization rules should continue to preclude use of private vendor systems for confirmation/affirmation services in DVP/RVP trades. However, if the PSE's proposed rule change being approved by this order is not approved prior to the June 7, 1995, effective date of Rule 15c6–1, the PSE rules will conflict with the Commission's Rule 15c6–1.

The Thomson letter suggests that approval of the proposed rule change without amendments to Rule 9.12(a)(5) raises competitive concerns. Under the Act, the Commission's responsibility is to balance the perceived anticompetitive effects of a regulatory policy or decision against the purpose of the Act that would be advanced by the policy or decisions and the costs associated therewith. The Commission notes that any anticompetitive effects pointed to by Thomson are not caused by the proposed rule change being approved by this order but rather by an existing PSE rule. The Commission is reviewing Thomson's claim but does not believe that approval of this proposal will itself create any burdens on competition. Moreover, as discussed above, the rule advances fundamental purposes under the Act, namely the efficient clearance and settlement of securities.

IV. Conclusion

For the reasons stated above, the Commission finds that PSE's proposal is consistent with Section 6 of the Act.[11]

It is Therefore Ordered, pursuant to Section 19(b)(2) of the Act,[12] that the proposed rule change (File No. SR–PSE–94–27) be and hereby is approved and will become effective on June 7, 1995.

For the Commission by the Division of Market Regulation, pursuant to delegated authority.[13]

Margaret H. McFarland,

Deputy Secretary.

[FR Doc. 95–7138 Filed 3–22–95; 8:45 am]

BILLING CODE 8010–01–M

[7] *Supra* note 3.

[8] 15 U.S.C. § 78f (1988).

[9] The Commission release adopting Rule 15c6–1 stated that ''the value of securities positions can change suddenly causing a market participant to default on unsettled positions. Because the markets are interwoven through common members, default at one clearing corporation or by a major market participant or end-user could trigger additional failures resulting in risk to the national clearance and settlement system.'' Securities Exchange Act Release No. 33023 (October 6, 1993), 58 FR 52891.

[10] Securities Exchange Act Release No. 35332 (February 3, 1995), 60 FR 8102 (notice of proposed rule filing).

[11] 15 U.S.C. § 78f (1988).

[12] 15 U.S.C. § 78s(b)(2) (1988)

[13] 17 CFR 200.30(a) (12) (1994).

[Release No. 34–35511; File No. SR–Amex–95–06]

Self-Regulatory Organizations; Notice of Filing of Proposed Rule Change by the American Stock Exchange, Inc., Relating to Options on the Morgan Stanley REIT Index.

March 17, 1995.

Pursuant to Section 19(b)(1) of the Securities Exchange Act of 1934 (''Act'')[1] notice is hereby given that on February 16, 1995, the American Stock Exchange, Inc. (''Amex'' or ''Exchange'') filed with the Securities and Exchange Commission (''Commission'') the proposed rule change as described in Items I, II, and III below, which Items have been prepared by the Amex. The Exchange filed Amendment No. 1 to the proposed rule change on March 9, 1995.[2] The Commission is publishing this notice to solicit comments on the proposed rule change from interested persons.

I. Self-Regulatory Organization's Statement of the Terms of Substance of the Proposed Rule Change

The Amex proposes to trade options on the Morgan Stanley REIT Index (''REIT Index''), a new index developed by Morgan Stanley & Co. Incorporated (''Morgan Stanley'') comprised of real estate investment trusts (''REITs'')[3] which are traded on the Amex, the New

[1] 15 U.S.C. 78s(b)(1) (1982).

[2] Amendment No. 1 provides additional information regarding the Index components, and states that the Exchange will file with the Commission pursuant to Section 19(b)(1) of the Act should the number of component securities in the Index exceed 116. See letter from Claire P. McGrath, Managing Director and Special Counsel, Derivatives Securities, to Michael Walinskas, Branch Chief, Division of Market Regulation, Commission, dated March 9, 1995 (''Amendment No. 1'').

[3] All components of the Index will be REITs as that term is defined in Sections 856 through 860 of the Internal Revenue Code, 26 U.S.C. §§ 856–60 (1988 & Supp. 1993). *Id.* A REIT is a financial vehicle that allows investors to pool funds for participation in real estate ownership or financing. REITs are subject to special tax treatment and are exempt from corporate level tax if they meet certain qualifications. These qualifications include, but are not limited to, the distribution of 95% of taxable income; that five or fewer individuals cannot own more than 50% of the shares; that over 10% of total assets cannot be sold in one year; and that at least 75% of taxable income be derived from real estate in the form of, for example, rents, mortgages, or gains from the sale of real estate. See letter from Claire P. McGrath, Managing Director and Special Counsel, Derivatives Securities, Amex, to Michael Walinskas, Branch Chief, Division of Market Regulation, Commission, dated March 6, 1995.

York Stock Exchange, Inc. (''NYSE''), or through the facilities of the Nasdaq system and are reported Nasdaq national market (''NM'') securities. In addition, the Amex proposes to amend Rule 902C(d) to include the REIT Index in the disclaimer provisions of the rule.

II. Self-Regulatory Organization's Statement of the Purpose of, and Statutory Basis for, the Proposed Rule Change

In its filing with the Commission, the self-regulatory organization included statements concerning the purpose of and basis for the proposed rule change and discussed any comments it received on the proposed rule change. The text of these statements may be examined at the places specified in Item IV below. The self-regulatory organization has prepared summaries, set forth in Sections (A), (B), and (C) below, of the most significant aspects of such statements.

(A) Self-Regulatory Organization's Statement of the Purpose of, and Statutory Basis for, the Proposed Rule Change

1. Introduction

The Exchange is proposing to trade standardized options on the REIT Index, a capitalization weighted index developed by Morgan Stanley, representing a portfolio of the largest and most actively traded REITs, and designated to provide a broad measure of real estate equity performance. The Index does not include healthcare REITs, real estate operating companies or partnerships, or REITs that invest primarily in real estate mortgages or debt securities.

2. Eligibility Standards for Index Components

The REIT Index conforms with Exchange Rule 901C, which specifies criteria for inclusion of stocks in an index on which standardized options will be traded. In addition, Morgan Stanley has included in the Index only those REITs that meet the following standards: (1) A minimum market capitalization of $100 million; (2) a market price of at least $7.50 for the majority of business days during the three calendar months preceding the date of selection, as measured by the lowest closing price reported in any market in which the component security traded on each of the subject days; (3) trading volume in the component security of at least 1.2 million shares during the preceding six months; (4) each component security must be traded on the Amex, NYSE or must be a Nasdaq NM security; and (5) no component security will represent more than 25% of the weight of the Index, nor will the five highest weighted component securities in the Index, in the aggregate, account for more than 50% of the weight of the Index. The criteria set forth above are the same as or exceed many of the criteria established for the expedited listing of options on stock industry indexes pursuant to Exchange rule 901C, Commentary .02.

3. Maintenance of the Index

In creating the Index, Morgan Stanley identified approximately 87 REITs that meet or exceed the above criteria. In maintaining the Index, the Exchange will review the component securities on a quarterly basis to ensure that the Index continues to represent only the largest and most actively traded REITs. After the close of trading on the last business day of December, March, June, and September, all publicly traded equity REITs (except healthcare stocks and REITs that invest primarily in real estate mortgage or debt securities) will be reviewed to see if they meet the criteria outlined above. After the close of trading on the third Friday of January, April, July, and October, and Exchange will add to the Index all those REITs that meet the criteria and are not currently in the Index.

Those REITs already in the Index that no longer meet the following maintenance criteria will be removed from the Index at the same time. The maintenance criteria for the component securities are: (1) A minimum market capitalization of $75 million; (2) a market price of at least $5.00 for the majority of business days during the three calendar months preceding the date of selection, as measured by the lowest closing price reported in any market in which the component security traded on each of the subject days; and (3) trading volume in the component security of at least 900,000 shares during the preceding six months.

It is anticipated that the number of components in the REIT Index will increase as more real estate investment companies enter the public market, and those currently in the public market grow in size and trading volume. However, if the number of component securities in the Index shall increase to more than 116 or decrease to fewer than 58, the Exchange will file with the Commission pursuant to Section 19(b)(1) of the Act to obtain additional approval for such Index.[4]

The number of component stocks in the Index shall remain fixed between quarterly reviews except in the event of certain types of corporate actions such as a merger or takeover which warrants the removal of a component security from the Index prior to its quarterly review. In such case, the divisor shall be recalculated to ensure continuity of the Index's value.

4. Index Calculation

The REIT Index is market capitalization weighted, where the Index value is calculated by multiplying the primary exchange regular way last sale price of each component security by its number of shares outstanding, adding the sums and dividing by the current index divisor. The REIT Index is a total return index, in that the regular cash dividends of its component securities are reinvested into the Index portfolio. Therefore, at the close of trading each day, the prices of component securities which will trade ''ex-dividend'' the next day will be adjusted (downward) by the value of the dividend amount to reflect the price impact on the stock as it trades without (''ex'') the dividend on the following day. The divisor is then adjusted to ensure continuity of the Index value. The Index divisor was initially determined to yield a benchmark value of 200 on December 31, 1994. Similar to other stock index values published by the Exchange, the value of the Index will be calculated continuously and disseminated every 15 seconds over the Consolidated Tape Association's Network B.

5. Expiration and Settlement

The proposed options on the Index will be European style (*i.e.*, exercises permitted at expiration only), and cash settled. Standard option trading hours (9:30 a.m. to 4:10 p.m. New York time) will apply. The options on the REIT Index will expire on the Saturday following the third Friday of the expiration month. The last trading day in an expiring option series will normally be the second to last business day preceding the Saturday following the third Friday of the expiration month (normally a Thursday). Trading in expiring options will cease at the close of trading on the last trading day.

The Exchange plans to list options series with expirations in the three near-term calendar months and in the two additional calendar months in the January cycle. In addition, longer term option series having up to 36 months to expiration may be traded. In lieu of such long-term options on a full value Index level, the Exchange may instead list

[4] See Amendment No. 1, *supra* note 2.

long-term, reduced value put and call options based on one-tenth (1/10th) the Index's full value.

In either event, the interval between expiration months for either a full value or reduced value long-term option will not be less than six months. The trading of any long-term options would be subject to the same rules which govern the trading of all the Exchange's index options, including sales practice rules, margin requirements and floor trading procedures, and all options will have European style exercise. Position limits on reduced value long-term REIT Index options will be equivalent to the position limits for regular (full value) Index options and would be aggregated with such options (for example, if the position limit for the full value options is 10,500 contracts on the same side of the market, then the position limit for the reduced value options will be 105,000 contracts on the same side of the market).

The exercise settlement value for all of the Index's expiring options will be calculated based upon the primary exchange regular way opening sale prices for the component stocks. In the case of securities traded through the Nasdaq system, the first reported regular way sale price will be used. If any component stock does not open for trading on its primary market on the last trading day before expiration, then the prior day's last sale price will be used in the calculation.

6. Exchange Rules Applicable to Stock Index Options

Amex Rules 900C through 980C will apply to the trading of option contracts based on the Index. These rules address surveillance, exercise prices, and position limits. Surveillance procedures currently used to monitor trading in each of the Exchange's other index options will also be used to monitor trading in options on the REIT Index. The Exchange has designated the Index a Stock Index Option under Rule 901C(a) and a Stock Index Industry Group under Rule 900C(b)(1). With respect to Rule 903C(b), the Exchange proposes to list near-the-money (*i.e.,* within ten points above or below the current index value) option series on the Index at 2½ point strike (exercise) price intervals when the value of the Index is below 200 points. In addition, the Exchange expects that the review required by Rule 904C(c)[5] will result in a position limit of 10,500 contracts with respect to options on the Index.

[5] Rule 904C(c) relates to position limits for stock index industry groups.

7. Basis

The Exchange believes that the proposed rule change is consistent with Section 6(b) of the Act in general and furthers the objectives of Section 6(b)(5) of the Act in particular in that it is designated to prevent fraudulent and manipulative acts and practices, to promote just and equitable principles of trade, to foster cooperation and coordination with persons engaged in regulating, clearing, settling, processing information with respect to, and facilitating transactions in, securities, and in general to protect investors and the public interest, and to remove impediments to and perfect the mechanism of a free and open market and a national market system.

(B) Self-Regulatory Organization's Statement on Burden on Competition

The Amex believes that the proposed rule change will not impose any burden on competition.

(C) Self-Regulatory Organization's Statement on Comments on the Proposed Rule Change Received From Members, Participants, or Others

Written comments on the proposed rule change were neither solicited nor received.

III. Date of Effectiveness of the Proposed Rule Change and Timing for Commission Action

Within 35 days of the date of publication of this notice in the **Federal Register** or within such longer period (i) as the Commission may designate up to 90 days of such date if it finds such longer period to be appropriate and publishes its reasons for so finding or (ii) as to which the self-regulatory organization consents, the Commission will:

(a) by order approve such proposed rule change, or

(b) institute proceedings to determine whether the proposed rule change should be disapproved.

IV. Solicitation of Comments

Interested persons are invited to submit written data, views and arguments concerning the foregoing. Persons making written submissions should file six copies thereof with the Secretary, Securities and Exchange Commission, 450 Fifth Street, N.W., Washington, D.C. 20549. Copies of the submissions, all subsequent amendments, all written statements with respect to the proposed rule change that are filed with the Commission, and all written communications relating to the proposed rule change between the Commission and any person, other than those that may be withheld from the public and accordance with the provisions of 5 U.S.C. 552, will be available for inspection and copying in the Commission's Public Reference Section, 450 Fifth Street, N.W., Washington, D.C. Copies of such filing will also be available for inspection and copying at the principal office of the above mentioned self-regulatory organization. All submissions should refer to File No. SR–Amex-95–06 and should be submitted by April 13, 1995.

For the Commission, by the Division of Market Regulation, pursuant to delegated authority.[6]

[FR Doc. 95–7136 Filed 3–22–95; 8:45 am]

BILLING CODE 8010–01–M

[6] 17 CFR 200.30–3(a)(12) (1994).

[Release No. 34–35503; File No. SR–Phlx–94–55]

Self-Regulatory Organizations; the Philadelphia Stock Exchange, Inc., Order Approving Proposed Rule Change Relating to Implementation of a Three-Day Settlement Standard

March 16, 1995.

On November 14, 1994, the Philadelphia Stock Exchange, Inc., (''Phlx'') filed a proposed rule change (File No. SR–Phlx–94–55) with the Securities and Exchange Commission (''Commission'') pursuant to Section 19(b) of the Securities Exchange Act of 1934 (''Act'').[1] Notice of the proposal was published in the **Federal Register** on January 9, 1995 to solicit comments from interested persons.[2] The Commission received one comment letter.[3] As discussed below, this order approves the proposed rule change.

I. Description

In October 1993, the Commission adopted Rule 15c6–1 under the Act[4] which establishes three business days after the trade date (''T+3''), instead of five business days (''T+5''), as the standard settlement cycle for most securities transactions. The rule will become effective June 7, 1995.[5] Several of the Phlx's rules are interrelated with the T+5 settlement time frame. The

[1] 15 U.S.C. 78s(b) (1988).

[2] Securities Exchange Act Release No. 35176 (December 29, 1994), 60 FR 2417.

[3] Letter from Dr. Keith B. Jarrett, President, Thomson Trading Services, Inc., to Jonathan G. Katz, Secretary, Commission (January 30, 1995).

[4] 17 CFR 240.15c6–1 (1994).

[5] Securities Exchange Act Release Nos. 33023 (October 6, 1993), 58 FR 52891 (order adopting Rule 15c6–1) and 34952 (November 9, 1994), 59 FR 59137 (changing effective date from June 1, 1995, to June 7, 1995).

purpose of the proposed rule change is to amend Phlx's rules to be consistent with a T+3 settlement standard for securities transactions.

Rule 113(b), 114(b), and 115(b) specify the delivery date for regular way transactions in stocks, bonds, and convertible bonds, respectively. The time frames contained in each rule is being shortened to reflect a T+3 settlement environment. Similarly, Rules 113(c), 114(c), and 115(b) are being amended to provide that a seller's option cannot require delivery in less than four days. Rule 114(b) also is being amended to provide that bonds sold for delayed delivery must be delivered on T+5. Under the amendments to rule 117 (a) and (b), a seller's notice of next day delivery of securities sold pursuant to a seller's option or regular way delayed delivery may not be given until the third day following the date of the contract.

As amended, Rule 291 requires, unless otherwise agreed, securities loaned to be delivered on the third business day following the day of the loan, As amended, Rule 294 requires the return of securities loaned on the third full business day following the date the notice for the return is given.

Under Rule 362, the contract price of bonds dealt in ''and interest'' and made regular way delayed delivery will include interest computed on up to but not including T+3. As amended, Rule 371 (a) and (b) provides that there will be a cash adjustment for coupons paid during the pendency of delayed delivery contracts and seller's option contracts in bonds dealt in ''and interest'' made prior to the third business day preceding the interest payment date and delivered on or after the interest payment date.

Rule 431 is being amended to require transactions in stock to be ex-dividend or ex-rights on the second business day preceding the record date. With regard to a record date on other than a business day, the transaction will be ex-dividend or ex-right on the third preceding business day. Under Rule 432, the ex-warrant period will begin on the second business day preceding the date of expiration of warrants. When warrant expiration occurs on a day other than a business day, the ex-warrant period will begin on the third business day preceding expiration date.

Rule 823 is being amended to require all transactions effected on Phlx to be settled pursuant to the three day delivery plan which will require regular way transactions to settle on the third business day after the transaction. Rule 825(b) is being amended to state that the ex-dividend period for transactions in stock for which there exists a transfer facility in Philadelphia begins on the second business day preceding the record date. In the event the record date is not a business day, the ex-dividend date will be the third preceding business day. Under Rule 825(c), regular way transactions for stocks with transfer facilities only outside Philadelphia will be ex-dividend on the second business day preceding the equivalent Philadelphia record date.

The Phlx has requested that the proposed rule change become effective on the same date as Rule 15c6–1. Rule 15c6–1 will become effective on June 7, 1995.[6]

II. Written Comment

The Commission received one comment letter from Thomson Trading Services, Inc. (''Thomson'') suggesting that additional rule changes may be necessary to implement T+3 settlement.[7] Thomson believes that the Phlx should amend Rule 274(b) which requires the use of the facilities of a registered securities depository for confirmation and acknowledgement of all payment on delivery transactions in depository-eligible securities when the member organization, its agent, the customer, and its agent are participants in a securities depository.

III. Discussion

The Commission believes the proposal is consistent with the requirements of Section 6 of the Act.[8] Specifically, Section 6(b)(5) states that the rules of the exchange must be designed to foster cooperation and coordination with persons engaged in regulating, clearing, settling, and processing information. The Phlx rules and other self-regulatory organizations' rules provide a standard time frame for settlement of securities transactions. On June 7, 1995, the new settlement cycle of T+3 will be established as mandated by the Commission's Rule 15c6–1. As a result, the Phlx's current rules providing for a T+5 settlement cycle will be inconsistent with the Commission's rule. This proposal will amend the Phlx's rules to harmonize them with the Commission's Rule 15c6–1 and a T+3 settlement cycle.

In addition, the Commission believes that the proposed rule change is consistent with Section 6(b)(5) of the Act in that it protects investors and the public interest by reducing risks to clearing corporations, their members, and public investors which are inherent in settling securities transactions. The reduction of the time period for settlement of most securities transactions will correspondingly decrease the number of unsettled trades in the clearance and settlement system at any given time. Thus fewer unsettled trades will be subject to credit and market risk, and there will be less time between trade execution and settlement for the value of those trades to deteriorate.[9]

While the Thomson letter supports the Phlx's efforts to shorten the settlement cycle for securities transactions, Thomson believes that the Phlx should amend Rule 274(b), which requires the use of the facilities of a registered securities depository for the confirmation and acknowledgement of all payment on delivery transactions in depository-eligible securities when the member organization, its agent, the customer, and its agent are participants in a securities depository. The Commission believes that the issue raised by the Thomson letter need not be resolved prior to the approval of the proposed rule change. Discussions regarding Thomson's concerns are underway among the Commission, Thomson, and DTC. DTC has submitted a rule filing that will establish a linkage between DTC and vendors such as Thomson.[10] The Commission intends to consider whether a self-regulatory organization rule should continue to preclude use of private vendor systems for confirmation/affirmation services in DVP/RVP trades. However, if the Phlx's proposed rule change being approved by this order is not approved prior to the June 7, 1995, effective date of Rule 15c6–1, the Phlx rules will conflict with Commission Rule 15c6–1.

The Thomson letter suggests that approval of the proposed rule change without amendments to Rule 274(b) raises competitive concerns. Under the Act, the Commission's responsibility is

[6] The transition from five day settlement to three day settlement will occur over a four day period. Friday, June 2, will be the last trading day with five business day settlement. Monday, June 5, and Tuesday, June 6, will be trading days with four business day settlement. Wednesday, June 7, will be the first trading day with three business day settlement. As a result, trades from June 2 and June 5 will settle on Friday, June 9. Trades from June 6 and June 7 will settle on Monday, June 12.

[7] *Supra* note 3.

[8] 15 U.S.C. 78f (1988).

[9] The Commission release adopting Rule 15c6–1 stated that ''the value of securities positions can change suddenly causing a market participant to default on unsettled positions. Because the markets are interwoven through common members, default at one clearing corporation or by a major market participant or end-user could trigger additional failures resulting in risk to the national clearance and settlement system.'' Securities Exchange Act Release No. 33023 (October 6, 1993), 58 FR 52891.

[10] Securities Exchange Act Release No. 35332 (February 3, 1995), 60 FR 8102 (notice of filing of proposed rule change)

to balance the perceived anticompetitive effects of a regulatory policy or decision against the purpose of the Act that would be advanced by the policy or decisions and the costs associated therewith. The Commission notes that any anticompetitive effects pointed to by Thomson are not caused by the proposed rule change being approved by this order but rather by an existing Phlx rule. The Commission is reviewing Thomson's claim but does not believe that approval of this proposal will itself create any burdens on competition. Moreover, as discussed above, the rule advances fundamental purposes under the Act, namely the efficient clearance and settlement of securities.

IV. Conclusion

For the reasons stated above, the Commission finds that Phlx's proposal is consistent with Section 6 of the Act.[11]

It Is Therefore Ordered, pursuant to Section 19(b)(2) of the Act,[12] that the proposed rule change (File No. SR–Phlx–94–55) be and hereby is approved and will become effective June 7, 1995.

For the Commission by the Division of Market Regulation, pursuant to delegated authority.[13]

Margaret H. McFarland,

Deputy Secretary.

[FR Doc. 95–7137 Filed 3–22–95; 8:45 am]

BILLING CODE 8010–01–M

[11] 15 U.S.C. 78f (1988).

[12] 15 U.S.C. 78s(b)(2) (1988).

[13] 17 CFR 200.30(a)(12) (1994).

DEPARTMENT OF STATE

[Public Notice 2181]

United States International Telecommunications Advisory Committee Radiocommunication Sector Joint Ad Hoc Working Party 7B and 9D; Meeting Notice

The Department of State announces that the United States International Telecommunications Advisory Committee (ITAC), Radiocommunication Sector Joint Ad Hoc Working Party 7B and 9D will meet on 13 April 1995 at 1:30 to 4:30 p.m., in the conference room at the facilities of Stanford Telecom, Inc., 7501 Forbes Blvd., Suite 105, Seabrook, MD.

Joint Ad Hoc Working Party 7B and 9D has been established to develop recommendations that lead to a stable, long term sharing environment for the fixed service and the space research, space operation and Earth exploration-satellite services in the 2025–2110 MHz and 2200–2290 MHz bands; and also to develop a recommendation on the e.i.r.p. spectral density of fixed service emissions in the 25.25–27.5 GHz band that are directed towards the geostationary orbit.

This April Meeting will review the results of the Joint Ad Hoc WP 7B and 9D meeting, 3–4 November 1994 and begin preparations for the 21–24 July international meeting.

Members of the General Public may attend the meetings and join in the discussions, subject to the instructions of the Chairman, John E. Miller. Those persons who wish to attend, please call (301) 464–8900 or fax (301) 262–2642 and leave your name, address, phone and fax numbers.

Dated: March 13, 1995.

Warren G. Richards,

Chairman, U.S. ITAC for ITU-Radiocommunication Sector.

[FR Doc. 95–7163 Filed 3–22–95; 8:45 am]

BILLING CODE 4710–45–M

DEPARTMENT OF TRANSPORTATION

Federal Aviation Administration

Intent To Prepare Supplemental Environmental Impact Statement; Cal Black Memorial Airport, Halls Crossing, UT

AGENCY: Federal Aviation Administration (FAA), DOT.

ACTION: Notice of intent.

SUMMARY: The Northwest Mountain Region of the FAA announces: its intent to prepare Draft and Final Supplemental Environmental Impact Statements (SEIS) for further study of potential noise impacts associated with operation of Cal Black Memorial Airport at Halls Crossing, Utah and that the Federal SEIS scoping process will consist of a time period for interested agencies and persons to submit written comments as to their concerns regarding potential noise impacts upon areas surrounding the airport and how those impacts could be addressed in the Draft SEIS.

DATES: In order to be considered, written comments must be received by Mr. Dennis G. Ossenkop, Federal Aviation Administration, Airports Division, 1601 Lind Ave. S.W., Renton, WA 98055–4056, Telephone: (206) 277–2611 on or before June 30, 1995.

Questions concerning the draft SEIS or the process being applied by the FAA in connection with this study should also be directed to Mr. Ossenkop.

SUPPLEMENTARY INFORMATION: This SEIS is being prepared in response to the court's decision in *National Parks and Conservation Association* v. *F.A.A.*, 988 F.2d 1523 (10th Cir., 1993), which reserved the agency's determination of no significant impact from airport operations on visitors to surrounding recreational areas, and remanded the matter back to the agency for further analysis. Information, data, views and comments obtained in the course of the SEIS scoping process may be used in the preparation of the draft SEIS. The purpose of this notice is to inform the public and state, local and Federal governmental agencies of the fact that a draft SEIS will be prepared and to provide those interested in doing so with an opportunity to present their views, comments, information, data, or other relevant observations concerning the potential noise impacts on surrounding recreational areas, related to the operation of Cal Black Memorial Airport. It is not the intent of FAA to revisit any other environmental issue evaluated in the 1990 EIS, in this SEIS.

The May 1990 Final EIS and August 1990 FAA Record of Decision related to the construction of the airport can be reviewed at the following locations:

San Juan County Courthouse, Monticello, Utah 84535.

Federal Aviation Administration, Airports Division, 1601 Lind Ave. S.W., Renton, WA 98056–4056.

Denver Airports District Office, 5440 Roslyn, Suite 300, Denver, CO 80216–6026.

Issued in Renton, Washington on March 9, 1995.

David A. Field,

Acting Manager, Airports Division, Federal Aviation Administration, Northwest Mountain Region, Renton, Washington.

[FR Doc. 95–7190 Filed 3–22–95; 8:45 am]

BILLING CODE 4910–13–M

[Summary Notice No. PE–95–13]

Petitions For Exemption; Summary of Petitions Received; Dispositions of Petitions Issued

AGENCY: Federal Aviation Administration (FAA), DOT.

ACTION: Notice of petitions for exemption received and of dispositions of prior petitions.

SUMMARY: Pursuant to FAA's rulemaking provisions governing the application, processing, and disposition of petitions for exemption (14 CFR Part 11), this notice contains a summary of certain petitions seeking relief from specified requirements of the Federal Aviation Regulations (14 CFR Chapter I), dispositions of certain petitions previously received, and corrections. The purpose of this notice is to improve the public's awareness of, and

participation in, this aspect of FAA's regulatory activities. Neither publication of this notice nor the inclusion or omission of information in the summary is intended to affect the legal status of any petition or its final disposition.

DATES: Comments on petitions received must identify the petition docket number involved and must be received on or before April 12, 1995.

ADDRESSES: Send comments on any petition in triplicate to: Federal Aviation Administration, Office of the Chief Counsel, Attn: Rule Docket (AGC–200), Petition Docket No. ____, 800 Independence Avenue, SW., Washington, DC 20591.

The petition, any comments received, and a copy of any final disposition are filed in the assigned regulatory docket and are available for examination in the Rules Docket (AGC–200), Room 915G, FAA Headquarters Building (FOB 10A), 800 Independence Avenue, SW., Washington, DC 20591; telephone (202) 267–3132.

FOR FURTHER INFORMATION CONTACT: Mr. D. Michael Smith, Office of Rulemaking (ARM–1), Federal Aviation Administration, 800 Independence Avenue, SW., Washington, DC 20591; telephone (202) 267–7470.

This notice is published pursuant to paragraphs (c), (e), and (g) of § 11.27 of Part 11 of the Federal Aviation Regulations (14 CFR Part 11).

Issued in Washington, DC, on March 17, 1995.

Donald P. Byrne,

Assistant Chief Counsel for Regulations.

Petitions For Exemption

Docket No.: 28096.
Petitioner: Boeing.
Sections of the FAR Affected: 14 CFR 25.1435(b)(1).
Description of Relief Sought: To permit Boeing to test the hydraulic system of the model 737–700 airplane by a combination of a range-of-motion test of the complete hydraulic system at 3400 psig and component testing at 1.5 times design operating pressure, in lieu of the static test of the complete hydraulic system at 1.5 times the design operating pressure (4500 psi) as required by the FAR.

Docket No.: 28106.
Petitioner: Southwest Airlines Co.
Sections of the FAR Affected: 14 CFR 25.853(a) and 121.310(a)(2).
Description of Relief Sought: To allow relief from the peak heat release rate requirement of 65 kilowatts per square meter for sculptured ceiling panels with sound dampening tape on the back side installed on several Boeing 737–300 aircraft operated by Southwest Airlines.

Docket No.: 28112.
Petitioner: IPECO Europe.
Sections of the FAR Affected: 14 CFR 25.562(b)(2).
Description of Relief Sought: To allow IPECO Europe, for the Dornier 328 aircraft, a permanent grant of exemption from the floor track misalignment test requirements of § 25.562(b)(2) for the captain and first officer.

Docket No.: 28113.
Petitioner: International Aeronautical Systems, Inc.
Sections of the FAR Affected: 14 CFR 25.807(d) (1) and (7), 25.815 (a) and (e), and 121.310(m).
Description of Relief Sought: To permit a cargo/passenger combination configuration in a partial side-by-side arrangement with two separated passenger compartments and more than 60 feet between adjacent exits, for the DC–10–30F aircraft.

Dispositions of Petitions

Docket No.: 23771.
Petitioner: Cessna Aircraft Company.
Sections of the FAR Affected: 14 CFR 91.9(a) and 91.531(a) (1) and (2).
Description of Relief Sought/ Disposition: To extend Exemption No. 4050, as amended, which permits single pilot operations of Cessna Citation Models 550, S550, 552, and 560, provided the pilot meets certain experience and training requirements and qualifications. *GRANT, March 9, 1995, Exemption No. 4050H.*

Docket No.: 26223.
Petitioner: Airbus Service Company, Inc.
Sections of the FAR Affected: 14 CFR 61.55(b)(2); 61.56(c)(1); 61.57 (c) and (d); 61.58(c) (1) and (d); 61.63 (c)(2) and (d)(2) and (3); 61.65(c), (e)(2) and (3), and (g); 61.67(d)(2); 61.157(d) (1) and (2) and (e) (1) and (2); 61.191(c); and appendix A, part 121.
Description of Relief Sought/ Disposition: To permit Airbus to use FAA-approved simulators to meet certain flight experience requirements of part 61 of the FAR. GRANT, March 3, 1995, Exemption No. 6032.

Docket No.: 26734.
Petitioner: Sierra Industries, Inc.
Sections of the FAR Affected: 14 CFR 91.9(a) and 91.531(a) (1) and (2).
Description of Relief Sought/ Disposition: To extend Exemption No. 5517, as amended, which permits single pilot operations of certain Cessna Citation models (for Serial Nos. 0001 through 0349, only) that are equipped with Sierra's STC No. SA8176SW and wither STC Nos. SA2172NM or SA645NW, to be operated by one pilot without a second in command provided the pilot meets certain experience and training requirements and qualifications. This exemption is being reissued also to ensure that the conditions and limitations of this exemption conform to those recently approved for another exemption holder. *GRANT, March 9, 1995, Exemption No. 5517B.*

Docket No.: 26897.
Petitioner: Northwest Aerospace Training Corporation.
Sections of the FAR Affected: 14 CFR 124.411(a)(2), (a)(3), and (b)(2); 121.413 (b), (c), and (d); and appendix H. part 121.
Description of Relief Sought/ Disposition: To extend and amend Exemption No. 5538, as amended, which allows certain Northwest Aerospace Training Corporation (NATCO) instructors listed in its FAA-approved curriculum to serve as instructors or check airmen in simulators when under contract with part 121 certificate holders who contract with NATCO, without those persons having received ground and flight training in accordance with a training program approved under subpart N of part 121. This exemption also permits NATCO instructors, who serve in advanced simulators without being employed by the certificate holder for 1 year, to receive applicable training in accordance with the provisions of this exemption. The amendment clarifies and revises certain conditions explicit within the previous exemption, as amended. *GRANT, March 13, 1995, Exemption No. 5538B.*

Docket No.: 27089.
Petitioner: F.I.T. Aviation, Inc.
Sections of the FAR Affected: 14 CFR 141.65.
Description of Relief Sought/ Disposition: To extend Exemption 5624, which permits F.I.T. Aviation, Inc., to recommend graduates of its flight instructor certification courses for flight instructor certificates (with associated ratings), without having to take the FAA practical test. *GRANT, March 10, 1995, Exemption No. 5624A.*

Docket No.: 27658.
Petitioner: Qualiflight Training.
Sections of the FAR Affected: 14 CFR 141.65.
Description of Relief Sought/ Disposition: To allow Qualiflight Training to hold examining authority for the flight instructor and the airline transport pilot written tests. *DENIAL, February 28, 1995, Exemption No. 6035.*

Docket No.: 27946.
Petitioner: Business Air, Inc.
Sections of the FAR Affected: 14 CFR 91.9(a) and 135.99(a).

Description of Relief Sought/ Disposition: To permit the operation of an Embraer EMB–110 aircraft by a single pilot under instrument flight rules or night visual flight rules without an autopilot, provided no passengers are carried for hire. *DENIAL, February 27, 1995, Exemption No. 6033.*

Docket No.: 27984.

Petitioner: Epps Air Service.

Sections of the FAR Affected: 14 CFR 135.143(c)(2).

Description of Relief Sought/ Disposition: To permit Epps Air Service to operate without a TSO–C112 (Mode S) transponder installed on its aircraft operating under the provisions of part 135. *GRANT, March 1, 1995, Exemption No. 6037.*

Docket No.: 28025.

Petitioner: Jet Tech International, Inc.

Sections of the FAR Affected: 14 CFR 121.411(a) (2) and (3), and (b)(2); 121.413 (b), (c), and (d); and appendix H, part 121.

Description of Relief Sought/ Disposition: To permit certain Jet Tech International, Inc. (JTI), listed in a part 121 certificate holder's approved training program to act as simulator instructors for a particular certificate holder under part 121 without those persons having received all the required ground and flight training for each individual contracting part 121 certificate holder. JTI instructors must have completed all the approved ground and flight training required under subpart N for at least on part 121 certificate holder. This exemption permits JTI simulator instructors to serve in advance simulators without being employed by the certificate holder for 1 year, provided they receive applicable training in accordance with the provisions of this exemption. *PARTIAL GRANT, March 3, 1995, Exemption No. 6036.*

[FR Doc. 95–7188 Filed 3–22–95; 8:45 am]

BILLING CODE 4910–13–M

Research, Engineering and Development Advisory Committee; Subcommittee on Human Factors

Pursuant to section 10(A)(2) of the Federal Advisory Committee Act (Public Law 92–362; 5 U.S.C. App. I), notice is hereby given of a meeting of the Subcommittee on Human Factors of the Federal Aviation Administration (FAA) Research, Engineering and Development (R,E&D) Advisory Committee to be held Thursday, April 6, 1995, 9 am to 5 pm and continuing on Friday, April 7, 1995, 9 am to 1 pm. The meeting will take place at the Capital Gallery Building, 600 Maryland Avenue, SW., Washington, DC, in suite 500.

The agenda for this meeting will include discussion on certification and regulation as well as discussion on FAA research in human factors.

Attendance is open to the interested public, but limited to space available. With the approval of the subcommittee chairman, members of the public may present oral statements at the meeting. Persons wishing to present oral statements, obtain information, or attend the meeting should contact Dr. Mark Hofmann, AAR–100, 800 Independence Avenue, SW., Washington, DC, at (202) 267–7125, the FAA Designated Federal Official to the subcommittee.

Members of the public may present a written statement to the subcommittee at any time.

Issued in Washington, DC, on March 15, 1995.

Andres Zellweger,

Director, Office of Aviation Research.

[FR Doc. 95–7079 Filed 3–22–95; 8:45 am]

BILLING CODE 4910–13–M

Notice of Intent To Rule on Application To Impose and Use the Revenue From a Passenger Facility Charge (PFC) at Southwest Georgia Regional Airport, Albany, GA

AGENCY: Federal Aviation Administration (FAA), DOT.

ACTION: Notice of intent to rule on application.

SUMMARY: The FAA proposes to rule and invites public comment on the application to impose and use the revenue from a PFC at Southwest Georgia Regional Airport, Albany, Georgia under the provisions of the Aviation Safety and Capacity Expansion Act of 1990 (Title IX of the Omnibus Budget Reconciliation Act of 1990) (Public Law 101–508) and Part 158 of the Federal Aviation Regulations (14 CFR part 158).

DATES: Comments must be received on or before April 24, 1995.

ADDRESSES: Comments on this application may be mailed or delivered in triplicate to the FAA at the following address: Federal Aviation Administration, Atlanta Airports District Office, Campus Building, 1701 Columbia Avenue, Suite 2–260, College Park, GA 30337–2747.

In addition, one copy of any comments submitted to the FAA must be mailed or delivered to Mr. C.M. Armour, Airport Director, Southwest Georgia Regional Airport of the Albany-Dougherty Aviation Commission at the following address: Mr. C.M. Armour, Director, Southwest Georgia Regional Airport, 3905 Newton Road, Albany, Georgia 37707–3460.

Air carriers and foreign air carriers may submit copies of written comments previously provided to the Albany-Dougherty Aviation Commission under section 158.23 of part 158.

FOR FURTHER INFORMATION CONTACT: Mr. Walter Bauer, Program Manager, Atlanta Airports District Office, Campus Building, 1701 Columbia Avenue, Suite 2–260, Atlanta, Georgia, 30337–2747, telephone number (404) 305–7142. The application may be reviewed in person at this same location.

SUPPLEMENTARY INFORMATION: The FAA proposes to rule and invites public comment on the application to impose and use the revenue from a PFC at Southwest Georgia Regional Airport under the provisions of the Aviation Safety and Capacity Expansion Act of 1990 (Title IX of the Omnibus Budget Reconciliation Act of 1990) (Public Law 101–508) and part 158 of the Federal Aviation Regulations (14 CFR part 158).

On March 14, 1995, the FAA determined that the application to impose and use the revenue from a PFC submitted by the Albany-Dougherty Aviation Commission was substantially complete within the requirements of section 158.25 of part 158. The FAA will approve or disapprove the application, in whole or in part, no later than June 27, 1995.

The following is a brief overview of the application.

Level of the proposed PFC: $3.00.

Proposed charge effective date: September 1, 1995.

Proposed charge expiration date: October 29, 1999.

Total estimated PFC revenue: $473,801.00.

Brief description of proposed projects:

1. Preparation of PFC Application.
2. Acquire passenger facility lift device.
3. Prepare storm water pollution prevention plan.
4. Install in terminal building signs for disabled.
5. Acquire bunker gear proximity suits.
6. Acquire airport interactive aircraft rescue fire fighting video program and equipment.
7. Acquire airport/aircraft rescue fire fighting communication equipment.
8. Airport Master Plan update.
9. Terminal entrance and exit road rehabilitation.
10. Replace two security gates.
11. General aviation apron rehabilitation.

Class or classes of air carriers which the public agency has requested not be required to collect PFCs: None.

Any person may inspect the application in person at the FAA office

listed above under **FOR FURTHER INFORMATION CONTACT**. In addition, any person may, upon request, inspect the application, notice and other documents germane to the application in person at: Southwest Georgia Regional Airport, 3905 Newton Road, Albany, Georgia.

Issued in Atlanta, Georgia on March 14, 1995.

Howard M. Robinson,

Manager, Atlanta Airports District Office, Southern Region.

[FR Doc. 95–7191 Filed 3–22–95; 8:45 am]

BILLING CODE 4910–13–M

Notice of Intent To Rule on Application To Impose and Use the Revenue From a Passenger Facility Charge (PFC) at Colorado Springs Municipal Airport, Submitted by the City of Colorado Springs, CO

AGENCY: Federal Aviation Administration (FAA), DOT.

ACTION: Notice of intent to rule on application.

SUMMARY: The FAA proposes to rule and invites public comment on the application to impose and use PFC revenue at Colorado Springs Municipal Airport under the provisions of 49 U.S.C. 40117 and Part 158 of the Federal Aviation Regulations (14 CFR 158).

DATES: Comments must be received on or before April 24, 1995.

ADDRESSES: Comments on this application may be mailed or delivered in triplicate to the FAA at the following address: Alan E. Wiechmann, Manager; Denver Airports District Office, DEN–ADO; Federal Aviation Administration; 5440 Roslyn, Suite 300; Denver, CO 80216–6026.

In addition, one copy of any comments submitted to the FAA must be mailed or delivered to Mr. Gary W. Green, A.A.E., at the following address: City of Colorado Springs, 7770 Drennan Road, Colorado Springs, CO 80916.

Air Carriers and foreign air carriers may submit copies of written comments previously provided to Colorado Springs Municipal Airport, under section 158.23 of Part 158.

FOR FURTHER INFORMATION CONTACT: Mr. Chris Schaffer, (303) 286–5525; Denver Airports District Office, DEN–ADO; Federal Aviation Administration; 5440 Roslyn, Suite 300; Denver, Colorado 80216–6026. The application may be reviewed in person at this same location.

SUPPLEMENTARY INFORMATION: The FAA proposes to rule and invites public comment on the application to impose and use PFC revenue at Colorado Springs Municipal Airport, under the provisions of 49 U.S.C. 40117 and Part 158 of the Federal Aviation Regulations (14 CFR Part 158).

On March 16, 1995, the FAA determined that the application to impose and use the revenue from a PFC submitted by Colorado Springs Municipal Airport was substantially complete within the requirements of section 158.25 of Part 158. The FAA will approve or disapprove the application, in whole or in part, no later than June 21, 1995.

The following is a brief overview of the application.

Level of the proposed PFC: $3.00.

Proposed charge effective date: August 1, 1996.

Proposed charge expiration date: February 28, 2000.

Total estimated PFC revenues: $7,445,625.00.

Brief description of proposed project: Airport service road improvement project and taxiway improvement project.

Class or classes of air carriers which the public agency has requested not be required to collect PFC's: None.

Any person may inspect the application in person at the FAA office listed above under **FOR FURTHER INFORMATION CONTACT** and at the FAA Regional Airports Office located at: Federal Aviation Administration, Northwest Mountain Region, Airports Division, ANM–600, 1601 Lind Avenue S.W., Suite 540, Renton, WA 98055–4056.

In addition, any person may, upon request, inspect the application, notice and other documents germane to the application in person at the Colorado Springs Municipal Airport.

Issued in Renton, Washington on March 16, 1995.

David A. Field,

Manager, Planning, Programming and Capacity Branch, Northwest Mountain Region.

[FR Doc. 95–7189 Filed 3–22–95; 8:45 am]

BILLING CODE 4910–13–M

Federal Highway Administration

Environmental Impact Statement: Grant and Lafayette Counties, WI

AGENCY: Federal Highway Administration (FHWA), DOT.

ACTION: Notice of intent.

SUMMARY: The FHWA is issuing this notice to advise the public that an Environmental Impact Statement (EIS) will be prepared for the proposed improvement of USH 151 between Belmont and Dickeyville in Grant and Lafayette Counties, Wisconsin.

FOR FURTHER INFORMATION CONTACT: Mr. Richard C. Madrzak, Statewide Projects Engineer, Federal Highway Administration, 4502 Vernon Boulevard, Madison, Wisconsin 53705–4905. Telephone (608) 264–5968.

SUPPLEMENTARY INFORMATION: The FHWA, in cooperation with the Wisconsin Department of Transportation, will prepare an Environmental Impact Statement to improve US Highway 151 (USH 151) from west of the Village of Belmont to south of the Village of Dickeyville, a distance of about 29 km (18 mi).

The improvement of USH 151, which is primarily a two-lane rural highway, is being considered to improve traffic operation and safety while enhancing economic development potential for the USH 151 corridor from Dubuque, Iowa to Madison, Wisconsin. The Wisconsin Department of Transportation's Corridors 2020 Program, which provides a network of multi-lane highways serving statewide and regional transportation needs, includes this segment of USH 151 on the backbone network. Service expectation for the backbone network is for improvement to a 4-lane divided highway built to expressway standards, with full access control on relocation portions of the route.

Planning, environmental and engineering studies are underway to develop transportation alternatives. The EIS will assess the environmental impacts of alternatives including (1) No-build; (2) improvements along the existing rural corridor, with possible relocated alignments along portions of the route; (3) bypass corridors around the Village of Dickeyville; and (4) bypass corridors around the City of Platteville.

Information describing the proposed action and soliciting comments will be sent to appropriate Federal, State and local agencies and to private organizations and citizens who have previously expressed, or are known to have interest in this proposal. A series of public meetings will be held in the project corridor throughout the data gathering and development of alternatives. In addition, a public hearing will be held. Public notice will be given of the time and place of the meetings and hearing. The Draft EIS will be available for public and agency review and comment prior to the hearing. As part of the scoping process, coordination activities have begun. Scoping meetings will continue to be held on an individual or group meeting basis. Agency coordination will be accomplished during these meetings.

To ensure that the full range of issues related to this proposed action are addressed and all significant issues are identified, comments and suggestions are invited from all interested parties. Comments or questions concerning this proposed action and the EIS should be directed to FHWA at the address provided above.

(Catalog of Federal Domestic Assistance Program Number 20.205, Highway Planning and Construction. The regulations implementing Executive Order 112372 regarding intergovernmental consultation on Federal programs and activities apply to this program)

Issued: March 15, 1995.

Richard C. Madrzak,

Statewide Projects Engineer, Madison, Wisconsin.

[FR Doc. 95–7164 Filed 3–22–95; 8:45 am]

BILLING CODE 4910–22–M

UNITED STATES INFORMATION AGENCY

Burmese Refugee Program

ACTION: Notice—Request for Proposals.

SUMMARY: The Office of Academic Programs of the United States Information Agency's Bureau of Education and Cultural Affairs announces an open competition for an assistance award. Public and private non-profit organizations meeting the provisions described in IRS regulation 501 (c) (3) may apply to develop an educational program for approximately 5–7 Burmese students and professionals who left Burma after August 1988 and have since been living outside of Burma as refugees to receive undergraduate and/or graduate training in a variety of fields in the humanities and sciences in American colleges and universities.

Overall grant making authority for this program is contained in the Mutual Educational and Cultural Exchange Act of 1961, Public Law 87–256, as amended, also known as the Fulbright-Hays Act. The purpose of the Act is ''to enable the Government of the United States to increase mutual understanding between the people of the United States and the people of other countries * * *; to strengthen the ties which unite us with other nations by demonstrating the educational and cultural interests, developments, and achievements of the people of the United States and other nations * * * and thus to assist in the development of friendly, sympathetic and peaceful relations between the United States and the other countries of the world.''

Programs and projects must conform with Agency requirements and guidelines outlined in the Solicitation Package. USIA projects and programs are subject to the availability of funds.

ANNOUNCEMENT NAME AND NUMBER: All communications with USIA concerning this announcement should refer to the above title and reference number *E/AEF–95–05*.

DATES: Deadline for proposals: All copies must be received at the U.S. Information Agency by 5 p.m. Washington, D.C. time on Friday, April 28, 1995. Faxed documents will not be accepted, nor will documents postmarked on April 28, 1995 but received at a later date. It is the responsibility of each applicant to ensure that proposals are received by the above deadline.

FOR FURTHER INFORMATION CONTACT: Office of Academic Programs; East Asian Programs Branch—E/AEF, Room 208, U.S. Information Agency, 301 4th Street, S.W., Washington, D.C. 20547, (202) 619–5402 (phone), (202) 401–1728 (fax), to request a Solicitation Package, which includes more detailed award criteria; all application forms; and guidelines for preparing proposals, including specific criteria for preparation of the proposal budget. Please specify USIA Program Officer Wayne Peterson or Carol Elford on all inquiries and correspondences. Interested applicants should read the complete **Federal Register** announcement before addressing inquiries to the East Asian Programs Branch or submitting their proposals. Once the RFP deadline has passed, the East Asian Programs Branch officers may not discuss this competition in any way with applicants until after the Bureau proposal review process has been completed.

ADDRESSES: Applicants must follow all instructions given in the Solicitation Package. The original and 10 copies of the complete application should be sent to: U.S. Information Agency, Ref.: E/AEF–95–05, Office of Grants Management, E/XE, Room 336, 301 4th Street, S.W., Washington, D.C. 20547.

SUPPLEMENTARY INFORMATION: Pursuant to the Bureau's authorizing legislation, programs must maintain a non-political character and should be balanced and representative of the diversity of American political, social, and cultural life. ''Diversity'' should be interpreted in the broadest sense and encompass differences including but not limited to race, gender, religion, geographic location, socio-economic status, and physical challenges. Applicants are strongly encouraged to adhere to the advancement of this principle.

Overview

The goal of the program is to support the economic and democratic development of Burma by helping to educate potential leaders of Burma who could assist that country in future transition to a democratic government. It is USIA's intent to provide grantees with programs of the highest quality that meet their academic and personal needs and to further the Agency's mission to promote mutual understanding.

Guidelines

Project Description

A. The applicant shall design a proposal to recruit, nominate, select, place and monitor the Burmese students in accredited U.S. academic institutions for academic programs lasting a minimum of one year.

Note: Funding for the entire period of the student program should be projected in the proposal.

B. Students should be selected for either an undergraduate program or a graduate level program as appropriate. Programs shall include such enhancements as pre-departure and arrival orientations and interim workshops focusing on assessment of skills development and transition into the workplace and related adjustments.

C. Given the language difficulties experienced by most of the previous Burmese Refugee grantees, the programs may include an intensive English language study component.

D. The organization must work with USIA, INS and the American Embassy in Bangkok to coordinate public interest parole status for the grantees since they are not eligible for J–1 visas.

E. Since it is unlikely that the grantees will be able to return to Burma at the conclusion of the program, the organization must provide relocation assistance to them at the time their studies are terminated.

F. Program participants must carry the requisite level of health and accident insurance.

Proposed Budget

USIA anticipates awarding one grant not to exceed $300,000 for this program.

Organizations must submit a comprehensive line item budget, including a budget summary page, based on the specific guidance in the Application Package.

Please note that it is required that requested administrative funds, including indirect costs and

administrative expenses for orientation, not exceed 20 percent of the total amount requested from USIA; administrative expenses should be cost-shared. Grants awarded to eligible organizations with less than four years of experience in conducting international exchange programs will be limited to $60,000.

Applicants must submit a comprehensive budget for the entire program. There must be a summary budget as well as a breakdown reflecting both the administrative budget and the program budget. For better understanding or further clarification, applicants may provide separate sub-budgets for each program component, phase, location, or activity in order to facilitate USIA decisions on funding.

Allowable costs for the program include the following:

A. Program costs

(1) One-way economy fare international travel from their overseas location (on an American flag carrier for as much of the route as possible);

(2) Domestic travel;

(3) Tuition, room and board, incidental expenses, maintenance for university vacation periods;

(4) Educational materials;

(5) Costs of standardized test fees;

(6) Per diem for orientation, professional, academic and cultural enrichment.

B. Administrative costs (not to exceed 20% of the budget)

(1) Staff salaries and benefits;

(2) Staff travel;

(3) Communications (including telephone, fax, postage, etc.);

(4) Office supplies;

(5) Other direct costs.

Please refer to the Solicitation Package for complete budget guidances and formatting instructions.

Review Process

USIA will acknowledge receipt of all proposals and will review them for technical eligibility. Proposals will be deemed ineligible if they do not fully adhere to the guidelines stated herein and in the Solicitation Package. Eligible proposals will be forwarded to panels of USIA officers for advisory review. All eligible proposals will be reviewed by the Agency contracts office, as well as the USIA Office of East Asian and Pacific Affairs and the USIA post overseas, where appropriate. Proposals may also be reviewed by the Office of the General Counsel or by other Agency elements. Funding decisions are at the discretion of the USIA Associate Director for Educational and Cultural Affairs. Final technical authority for grant awards resides with the USIA grants officer.

Review Criteria

Technically eligible applicants will be competitively reviewed according to the criteria stated below. These criteria are not rank ordered and all carry equal weight in the proposal evaluation:

1. Quality of the program idea: Proposals should exhibit originality, substance, precision, and relevance to Agency mission.

2. Program planning: Detailed agenda and relevant work plan should demonstrate substantive undertakings and logistical capacity. Agenda and plan should adhere to the program overview and guidelines described above.

3. Ability to achieve program objectives: Objectives should be reasonable, feasible, and flexible. Proposals should clearly demonstrate how the institution will meet the program's objectives and plan.

4. Support of Diversity: Proposals should demonstrate the recipient's commitment to promoting the awareness and understanding of diversity.

5. Institutional Capacity: Proposed personnel and institutional resources should be adequate and appropriate to achieve the program or project's goals.

6. Institution's Record/Ability: Proposals should demonstrate an institutional record of successful exchange programs, including responsible fiscal management and full compliance with all reporting requirements for past Agency grants as determined by USIA's Office of Contracts. The Agency will consider the past performance of prior recipients and the demonstrated potential of new applicants.

7. Project Evaluation: Proposals should include a plan to evaluate the activity's success, both as the activities unfold and at the end of the program. USIA recommends that the proposal include a draft survey questionnaire or other technique plus description of a methodology to use to link outcomes to original project objectives. Award-receiving organizations/institutions will be expected to submit intermediate reports after each project component is concluded or quarterly, whichever is less frequent.

8. Cost-effectiveness: The overhead and administrative components of the proposal, including salaries and honoraria, should be kept as low as possible. All other items should be necessary and appropriate.

9. Cost-sharing: Proposals should maximize cost-sharing through other private sector support as well as institutional direct funding contributions.

10. Value to U.S.-Partner Country Relations: Proposed projects should receive positive assessments by USIA's geographic area desk and USIS Bangkok officers of program need, potential impact, and significance in the partner country(ies).

Notice

The terms and conditions published in this RFP are binding and may be not be modified by any USIA representative. Explanatory information provided by the Agency that contradicts published language will not be binding. Issuance of the RFP does not constitute an award commitment on the part of the Government. The needs of the program may require the award to be reduced, revised, or increased. Final awards cannot be made until funds have been appropriated by Congress, allocated and committed through internal USIA procedures.

Notification

All applicants will be notified of the results of the review process on or about June 16, 1995. Awards made will be subject to periodic reporting and evaluation requirements.

Dated: March 15, 1995.

Dell Pendergrast,

Deputy Associate Director, Educational and Cultural Affairs.

[FR Doc. 95–6780 Filed 3–22–95; 8:45 am]

BILLING CODE 8230–01–M

Meeting of the Advisory Board for Cuba Broadcasting

The Advisory Board for Cuba Broadcasting will conduct a meeting at 10 a.m. on Friday, March 24, 1995, at the Doral Hotel and Resort, 4400 NW. 87th Avenue, Miami, Florida. The intended agenda is listed below.

Presidential Advisory Board Meeting, March 24, 1995

Agenda

I. Continuation of the Discussion on the Feasibility Study on Radio and T.V. Martí Relocation

II. Old Business

III. New Business

Members of the public interested in attending the meeting should contact Ms. Angela R. Washington, at the Advisory Board Office. Ms. Washington can be reached at (202) 401–2178.

Due to the limited availability of Advisory Board members and other scheduling problems and the need to move the project forward, this announcement will appear for less than 15 days.

Dated: March 17, 1995.

Yvonne F. Soler,

Executive Director, Presidential Advisory Board for Cuba Broadcasting.

[FR Doc. 95–7098 Filed 3–22–95; 8:45 am]

BILLING CODE 8230–01–M

Sunshine Act Meetings

Federal Register
Vol. 60, No. 56
Thursday, March 23, 1995

This section of the FEDERAL REGISTER contains notices of meetings published under the "Government in the Sunshine Act" (Pub. L. 94-409) 5 U.S.C. 552b(e)(3).

U.S. CONSUMER PRODUCT SAFETY COMMISSION

TIME AND DATE: Thursday, March 23, 1995, 10:00 a.m.

LOCATION: Room 420, East West Towers, 4330 East West Highway, Bethesda, Maryland.

STATUS: Open to the Public.

MATTER TO BE CONSIDERED:

Bunk Beds

The staff will brief the Commission on options for Commission action to address fatal entrapment and other incidents associated with bunk beds.

For a recorded message containing the latest agenda information, call (301) 504–0709.

CONTACT PERSON FOR ADDITIONAL INFORMATION: Sadye E. Dunn, Office of the Secretary, 4330 East West Highway, Bethesda, MD 20207 (301) 504–0800.

Dated: March 17, 1995.

Sadye E. Dunn,

Secretary.

[FR Doc. 95–7270 Filed 3–21–95; 9:20 am]

BILLING CODE 6355–01–M

FEDERAL ELECTION COMMISSION

"FEDERAL REGISTER" NUMBER: 95–6695.

PREVIOUSLY ANNOUNCED DATE AND TIME: Thursday, March 23, 1995, at 10:00 a.m. Meeting Open to the Public.

THE FOLLOWING ITEM WAS ADDED TO THE AGENDA: Proposed Regulations Schedule.

DATE AND TIME: Thursday, March 28, 1995 at 2:00 p.m.

PLACE: 999 E Street, N.W., Washington, D.C.

STATUS: This meeting will be closed to the Public.

ITEMS TO BE DISCUSSED:

Compliance matters pursuant to 2 U.S.C. § 437g.
Audits conducted pursuant to 2 U.S.C. § 437g, § 438(b), and Title 26, U.S.C.
Matters concerning participation in civil actions or proceedings or arbitration
Internal personnel rules and procedures or matters affecting a particular employee

DATE AND TIME: Thursday, March 30, 1995 at 10:00 a.m.

PLACE: 999 E Street, N.W. Washington, D.C. (Ninth Floor.)

STATUS: This Meeting Will Be Open to the Public.

ITEMS TO BE DISCUSSED:

Correction and Approval of Minutes
Advisory Opinion 1995–06: Gregory Damico on behalf of Red Lion Inns Limited Partnership
Regulations:
MCFL revised draft final rules; Qualified Nonprofit Corporations (11 CFR 114.10). Continued from meeting of March 23, 1995.
Administrative Matters.

PERSON TO CONTACT FOR INFORMATION: Mr. Ron Harris, Press Officer, Telephone: (202) 219–4155.

Delores Hardy,

Administrative Assistant.

[FR Doc. 95–7387 Filed 3–21–95; 3:26 pm]

BILLING CODE 6715–01–M

DEPARTMENT OF JUSTICE

UNITED STATES PAROLE COMMISSION

Public Announcement

Pursuant to the Government in the Sunshine Act

Public Law 94–409)

[5 U.S.C. Section 552b]

DATE AND TIME: Tuesday, March 28, 1995, 9:00 a.m.

PLACE: 5550 Friendship Boulevard, Chevy Chase, Maryland 20815.

STATUS: Closed—Meeting.

MATTERS CONSIDERED: The following matters will be considered during the closed portion of the Commission's Business Meeting:

Appeals to the Commission involving approximately five cases decided by the National Commissioners pursuant to a reference under 28 C.F.R. 2.27. These cases were originally heard by an examiner panel wherein inmates of Federal prisons have applied for parole or are contesting revocation of parole or mandatory release.

AGENCY CONTACT: Tom Kowalski, Case Operations, United States Parole Commission, (301) 492–5962.

Dated: March 17, 1995.

Michael A. Stover,

General Counsel, U.S. Parole Commission.

[FR Doc. 95–7271 Filed 3–21–95; 9:20 am]

BILLING CODE 4410–01–M

DEPARTMENT OF JUSTICE

UNITED STATES PAROLE COMMISSION

Public Announcement

Pursuant to the Government in the Sunshine Act

(Public Law 94–409)

[5 U.S.C. Section 552b]

TIME AND DATE: 1:00 p.m., Tuesday, March 28, 1995.

PLACE: 5550 Friendship Boulevard, Chevy Chase, Maryland 20815.

STATUS: Open.

MATTERS TO BE CONSIDERED: The following matters have been placed on the agenda for the open Parole Commission meeting:

1. Approval of minutes of previous Commission meeting.
2. Reports from the Chairman, Commissioners, Legal, Chief of Staff, Case Operations, and Administrative Sections.
3. Addition to the Rules and Procedures Manual requiring staff to telephone witnesses whom the Parole Commission subpoenas to its revocation hearings.
4. Revising the Salient Factor Score to account for our aging population.
5. Discussion on decisions outside the guidelines for unusually large fraud cases.
6. Discussion on centralizing transfer treaty decision-making authority.
7. Discussion on the transfer of states from the North Central Region to the Eastern Region.
8. Discussion on the required number of votes on original jurisdiction and administrative review cases.

AGENCY CONTACT: Tom Kowalski, Case Operations, United States Parole Commission, (301) 492–5962.

Dated: March 17, 1995.

Michael A. Stover,

General Counsel, U.S. Parole Commission.

[FR Doc. 95–7272 Filed 3–21–95; 9:20 am]

BILLING CODE 4410–01–M

MERIT SYSTEMS PROTECTION BOARD

TIME AND DATE: 10:00 a.m., Monday, April 3, 1995.

PLACE: Francis Perkins Hearing Room, Ninth Floor, 1120 Vermont Avenue, N.W., Washington, D.C. 20419.

STATUS: The meeting will be open to the public.

MATTERS TO BE CONSIDERED: Establishment of task force to recommend changes in the structure of the Board that will allow the Board to meet budgetary requirements of

National Performance Review II through fiscal year 2000.

CONTACT PERSON FOR ADDITIONAL INFORMATION: Robert E. Taylor, Clerk of the Board, (202) 653–7200.

Dated: March 21, 1995.

Robert E. Taylor,

Clerk of the Board.

[FR Doc. 95–7386 Filed 3–21–95; 3:05 pm]

BILLING CODE 7400–01–M

NATION COUNCIL ON DISABILITY (NCD)

Type: 50-State ADA Town Meeting Tour

SUMMARY: This notice sets forth the announcement of additional dates, locations, and contacts for NCD's 50-state town meeting tour on the implementation of the Americans with Disabilities Act (ADA). Notice of these meetings is required under Section 522b (e)(1) of the Government in the Sunshine Act, (P.L. 94–409).

BACKGROUND: As an independent Federal agency making recommendations to the President and the Congress on issues affecting 49 million Americans with disabilities and their families, NCD has congressional authority and responsibility to monitor ADA implementation. In fact, it was the NCD that first proposed the ADA in 1986. In 1991, NCD established ADA Watch.

These town meetings are being conducted as part of NCD's ADA Watch initiative. NCD is interested in hearing personal stories from consumers as to the law's impact. NCD is particularly interested in hearing about varying types of successes and the methods used to achieve those successes. The stories could be about personal experiences, or something related to changes in the community.

1995 Dates, Locations, and Contact Numbers

February 1—Miami, Florida .....(305) 547–5444
February 2—Jackson, Mississippi .....(601) 969–0601
February 4—Atlanta, Georgia .....(404) 451–2340
February 7—Frankfort, Kentucky .....(502) 564–2918
February 9—Columbia, South Carolina .....(803) 782–0639
February 14—Birmingham, Alabama .....(205) 251–2223
February 15—Topeka, Kansas .....(913) 296–6527
February 16—New Orleans, Louisiana .....(504) 286–6939
February 17—Albuquerque, New Mexico .....(505) 827–6465
February 21—Little Rock, Arkansas .....(501) 661–2953
February 21—Oklahoma City, Oklahoma .....(405) 949–1962
February 22—Arlington, Texas .....(512) 463–5741
February 28—Honolulu, Hawaii .....(808) 537–1941
March 1—Los Angeles, California.....(310) 390–3611
March 2—Dover, Delaware.....(302) 577–2850
March 7—Norfolk, Virginia.....(804) 461–8007
March 9—Sutton, West Virginia.....(304) 525–3324
March 10—Harrisburg, Pennsylvania.....(610) 378–4372
March 15—Wanamassa, New Jersey.....(609) 292–3745
March 16—Portland, Maine.....(207) 624–5307
March 17—Concord, New Hampshire .....(603) 228–9680
March 21—Cranston, Rhode Island .....(401) 277–2833
March 22—Boston, Massachusetts .....(617) 338–6665
March 24—Albany, New York .....(518) 473–4129
March 29—Cromwell, Connecticut .....(203) 257–3221
March 31—Detroit, Michigan .....(313) 832–3371
April 4—Columbus, Ohio.....(614) 466–5205
April 6—Nashville, Tennessee.....(615) 428–6266
April 11—Des Moines, Iowa .....(515) 281–5969
April 12—Jefferson City, Missouri .....(314) 751–2600
April 13—Missoula, Montana .....(406) 243–2636
April 13—Madison, Wisconsin.....(608) 266–5378
April 14—Montpelier, Vermont.....(802) 456–8908
April 21—Salem, Oregon .....(800) 358–3117
April 28—Winston-Salem, North Carolina.....(704) 375–3977
May 3—Salt Lake City, Utah .....(801) 797–3886
May 3—Las Vegas, Nevada.....(702) 687–4452

Additional dates, locations, and contacts will be published when available.

FOR INFORMATION CONTACT: Mark S. Quigley, Public Affairs Specialist, National Council on Disability, 1331 F Street, NW, Suite 1050, Washington, DC 20004–1107, Telephone: (202) 272–2004, (202) 272–2074 (TT).

AGENCY MISSION: NCD is an independent Federal agency comprised of 15 members who are appointed by the President of the United States and confirmed by the U.S. Senate. The overall purpose of the Council is to promote policies, programs, practices, and procedures that guarantee equal opportunity for all people with disabilities, regardless of the nature of severity of the disability; and to empower people with disabilities to achieve economic self-sufficiency, independent living, and inclusion and integration into all aspects of society.

ACCOMMODATIONS: Those needing interpreters or other accommodations should notify NCD prior to each town meeting.

ENVIRONMENTAL ILLNESS: People with environmental illness must reduce their exposure to volatile chemical substances in order to attend these meetings. In order to reduce such exposure, we ask that you not wear perfumes or scents at the town meetings. We also ask that you smoke only in designated areas and the privacy of your room. Smoking is prohibited in the meeting rooms and surrounding area.

OPEN MEETING: These town meetings of NCD shall be open to the public.

AGENDA: The proposed agenda includes:

Opening Statements
Success Stories from Consumers
Discussion
Announcements
Adjournment

Records shall be kept of all NCD proceeding and shall be available after the meetings for public inspection at NCD.

Signed in Washington, D.C., on March 20, 1995.

Speed Davis,

Acting Executive Director.

[FR Doc. 95–7301 Filed 3–21–95; 10:32 am]

BILLING CODE 6820–BS–M

federal register

Thursday
March 23, 1995

Part II

Department of Energy

Office of Energy Efficiency and Renewable Energy

10 CFR Part 430

Test Procedures for Water Heaters; Kitchen Ranges, Ovens, and Microwave Ovens; and Clothes Washers; and Reporting Requirements for Clothes Washers, Clothes Dryers and Dishwashers; Proposed Rule

DEPARTMENT OF ENERGY

Office of Energy Efficiency and Renewable Energy

10 CFR Part 430

[Docket No. EE-RM–94–230]

Energy Conservation Program for Consumer Products: Test Procedures for Water Heaters; Kitchen Ranges, Ovens, and Microwave Ovens; and Clothes Washers; and Reporting Requirements for Clothes Washers, Clothes Dryers, and Dishwashers

AGENCY: Office of Energy Efficiency and Renewable Energy, Department of Energy.

ACTION: Proposed Rule and Public Hearing.

SUMMARY: The Energy Policy and Conservation Act, as amended, requires the Department of Energy (DOE or the Department) to administer an energy conservation program for certain major household appliances and commercial equipment. Among other program elements, the Act requires that standard methods of testing be prescribed for each covered product. The purposes of this Proposed Rulemaking are to: propose amendments to clarify the water heater; kitchen range, oven, and microwave; and clothes washer test procedures, announce the Department's intentions to incorporate by reference test procedures adopted by the International Electrotechnical Commission (IEC), and request data, comments, and information regarding their applicability and workability. Today's amendments of the test procedures are not expected to alter the minimum energy conservation standards currently in effect, or those being proposed in the Eight Products Notice of Proposed Rulemaking, published March 4, 1994 (59 FR 10464).

DATES: Written comments in response to this notice must be received by August 31, 1995.

Oral views, data, and arguments may be presented at the public hearing to be held in Washington, DC, beginning at 9:30 a.m. on July 12, 1995. Requests to speak at the hearing must be received by the Department no later than 4 p.m., June 28, 1995. Ten (10) copies of statements to be given at the public hearing must be received by the Department no later than 4 p.m., July 5, 1995.

ADDRESSES: Written comments, and requests to speak at the public hearing are to be submitted to: U.S. Department of Energy, Office of Energy Efficiency and Renewable Energy, Hearings and Dockets, Test Procedures for Water Heaters; Kitchen Ranges, Ovens, and Microwave Ovens; and Clothes Washers; and Reporting Requirements for Clothes Washers, Clothes Dryers, and Dishwashers,'' Docket No. EE–RM–94–230, Forrestal Building, 1000 Independence Avenue, SW., Washington, DC 20585.

The hearing will be held at the U.S. Department of Energy, Forrestal Building, Room 1E–245, 1000 Independence Avenue, SW., Washington, DC.

Requests may be hand delivered between the hours of 8 a.m. and 4 p.m., Monday through Friday, except Federal holidays. Requests should be labeled, ''Test Procedures for Water Heaters; Kitchen Ranges, Ovens, and Microwave Ovens; and Clothes Washers; and Reporting Requirements for Clothes Washers, Clothes Dryers, and Dishwashers,'' (Docket No. EE–RM–94–230), both on the document and on the envelope.

Copies of the transcript of the public hearing and public comments received may be read and/or photocopied at the Department of Energy Freedom of Information Reading Room, U.S. Department of Energy, Forrestal Building, Room 1E–190, 1000 Independence Avenue, SW., Washington, DC 20585, (202) 586–6020 between the hours of 9 a.m. and 4 p.m., Monday through Friday, except Federal holidays.

The Department will incorporate by reference test standards from the International Electrotechnical Commission upon publication of this rule as final. These standards are listed below:

International Electrotechnical Commission Publication 705, and Amendment 2–1993, ''Methods for Measuring the Performance of Microwave Ovens for Household and Similar Purposes,'' Section 4, Paragraph 12 ''Microwave Power Output Measurement,'' Paragraph 13 ''Electrical Power Output Measurement,'' and Paragraph 14 ''Efficiency.''

Copies of these standards may be viewed at the Department of Energy Freedom of Information Reading Room at the address stated above. Copies of the International Electrotechnical Commission Publication can be obtained from the American National Standards Institute, 11 West 42nd Street, New York, New York 10036, (212) 642–4936.

For more information concerning public participation in this rulemaking proceeding, see Section XI, ''Public Comment Procedures,'' of the **SUPPLEMENTARY INFORMATION** section.

FOR FURTHER INFORMATION CONTACT:

William W. Hui—Water Heaters (202) 586–9145

Ingrid M. Watson—Ranges, Ovens and Microwaves (202) 586–8119

Marc LaFrance—Clothes Washers and Dryers, and Dishwashers (202) 586–8423

U.S. Department of Energy, Energy Efficiency and Renewable Energy,Mail Station EE–431, Forrestal Building, 1000 Independence Avenue, SW., Washington, DC. 20585

Eugene Margolis, Esq., U.S. Department of Energy, Office of General Counsel, Mail Station GC–72, Forrestal Building, 1000 Independence Avenue, SW., Washington, D.C. 20585, (202) 586–9507.

SUPPLEMENTARY INFORMATION:

I. Introduction

A. Authority

Part B of Title III of the Energy Policy and Conservation Act, Pub. L. 94–163, as amended by the National Energy Conservation Policy Act, Pub. L. 95–619, the National Appliance Energy Conservation Act of 1987, Pub. L. 100–12, the National Appliance Energy Conservation Amendments of 1988, Pub. L. 100–357, and the Energy Policy Act of 1992, Pub. L. 102–486, created the Energy Conservation Program for Consumer Products other than Automobiles (Program).[1] The products currently subject to this Program (often referred to hereafter as ''covered products'') include water heaters; kitchen ranges, ovens, and microwaves; and clothes washers, the subjects of today's notice.

Under the Act, the Program consists essentially of three parts: Testing, labeling, and the Federal energy conservation standards. The Department, in consultation with the National Institute of Standards and Technology (formerly the National Bureau of Standards), is required to amend or establish new test procedures as appropriate for each of the covered products. EPCA, section 323. The purpose of the test procedures is to produce test results which measure energy efficiency, energy use, water use (in the case of showerheads, faucets, water closets and urinals), or estimated annual operating cost of a covered product during a representative average use cycle or period of use, and must not be unduly burdensome to conduct. EPCA, section 323(b)(3). A test

[1] Part B of Title III of Energy Policy and Conservation Act, as amended, is referred to in this final rule as ''EPCA'' or the ''Act.'' Part B of Title III is codified at 42 U.S.C. 6291–6309.

procedure is not required if DOE determines by rule that one cannot be developed. EPCA, section 323(d)(1). One hundred and eighty days after a test procedure for a product is adopted, no manufacturer may make representations with respect to energy use, energy efficiency or water use of such product, or the cost of energy consumed by such product, except as reflected in tests conducted according to the DOE procedure. EPCA, section 323(c)(2). Test procedures appear at 10 CFR part 430, subpart B.

However, the 180-day period referred to in section 323(c)(2) may be extended for a period of up to an additional 180 days if the Secretary determines that the requirements of section 323(c)(2) would impose undue burden. EPCA, section 323(c)(3).

Section 323(e) of the Act requires DOE to determine to what extent, if any, a proposed test procedure would alter the measured energy efficiency, measured energy use or measured water use of any covered product as determined under the existing test procedure. If DOE determines that an amended test procedure would alter the measured efficiency or measured use of a covered product, DOE is required to amend the applicable energy conservation standard accordingly. In determining the amended energy conservation standard, DOE is required to measure the energy efficiency or energy use of a representative sample of covered products that minimally comply with the existing standard. The average efficiency of these representative samples, tested using the amended test procedure, constitutes the amended standard. EPCA, section 323(e)(2).

B. Background

Today's notice proposes to modify the test procedures for water heaters; kitchen ranges, ovens, and microwave ovens; and clothes washers as follows:

(1) Water heaters.

(a) Revision of subpart B, appendix E.

1. Modify the test procedures to address electric and oil-fired instantaneous water heaters.

2. Include testing of storage-type water heaters having rated storage capacities less than 20 gallons (76 liters).

3. Revise the method used to calculate the first hour rating of storage-type water heaters.

4. Amend the extant definition for heat pump water heater, and add new definitions for heat pump water heater storage tank, add-on heat pump water heater, integral heat pump water heater, and solar water heater.

(2) Kitchen ranges, ovens, and microwaves.

(a) Revision of subpart B, section 430.22 to include test procedure changes.

(b) Revision of subpart B, appendix I.

1. Revise the annual useful energy output to reflect changes in the annual usage of ranges, ovens, cooktops, and microwave ovens.

2. Add definition for ''IEC 705.''

3. Eliminate the requirement to use a standard continuous flow calorimeter.

4. Incorporate by reference the International Electrotechnical Commission Publication 705 Amendment 2–1993, section 4, Paragraphs 12–14.

5. Include the clock energy in the calculation of annual energy consumption for microwave ovens.

6. Revise section 2.8 ''Test Beakers'' replace with new section 2.8 ''Microwave Oven Test Load.''

7. Revise section 2.9.3.4 ''Microwave Oven and Test Load Temperature,'' replace with new section 2.9.3.4 ''Test Load Temperature.''

8. Eliminate section 4.3 ''Conventional Range,'' and section 4.5 ''Microwave/Conventional Range.'' These two sections have been replaced with a new section 4.3 ''Combined Components'' in this proposed rule.

(3) Clothes washers.

(a) Revision of subpart B, § 430.22 to include test procedure changes and to revise the number of representative average-use cycles per year.

(b) Revision of subpart B, appendix J.

1. General test procedure clarification which includes the following:

- Add new definitions for the following terms: thermostatically controlled valves, agitator, top-loader-vertical-axis clothes washer, and top-loader-horizontal-axis clothes washer.
- Delete the requirement to disconnect all lighting systems which consume more than 10 watts during the clothes washer test cycle.
- Introduce a new section, section 2.11 ''Agitation and Spin Speed Settings.''
- Delete reference to AHAM and AHAM procedures.
- Clarify the procedure for capacity testing.
- Clarify the requirements for ''maximum fill'' testing.

2. Incorporation of test procedure changes from approved Waivers to address the following issues:

- Add new definitions for the following terms: nonwater-heating clothes washers and water-heating clothes washers.
- Extend coverage for washers that operate at 120/208Y and 120/240 volts.
- Extend testing and performance coverage to water-heating clothes washers.
- Extend coverage for clothes washers that have infinite/variable temperature selection capability.

3. Addition of optional water consumption and extraction procedures which include the following:

- Add new definitions for the following terms: modified energy factor, moisture removal energy and water consumption factor.
- Add optional test procedures to determine the above values.

(4) Addition to subpart F, § 430.62, to add reporting requirements for energy factors for clothes washers, clothes dryers, and dishwashers.

In addition, metric units of measurements have been included in the three test procedures (English values are given followed by their appropriate International System of Units in parentheses).

II. Discussion

A. Water Heater Test Procedure

Today's proposed amendments to the water heater test procedure include: Revisions to make the water heater test procedure applicable to electric and oil-fired instantaneous water heaters; coverage for testing storage-type water heaters with rated storage capacities less than 20 gallons (76 liters); revision of the first hour rating for storage-type water heaters; amendment to the extant definition for heat pump water heater; and addition of new definitions for heat pump water heater storage tank, add-on heat pump water heater, integral heat pump water heater, and solar water heater.

The Department does not believe any of these changes would alter the energy conservation standards for water heaters currently in place, and requests comments on the impact of these changes, if any. In addition, DOE requests comments on the adequateness of the test procedure for heat pump water heaters regarding the use of backup electric resistance element(s). To the Department's knowledge, most heat pump water heaters are capable of meeting the current test draw requirements, and therefore, the backup electric resistance element(s) are often unnecessary, and are seldom activated. However, the current test setup and parameters may not represent operating conditions requiring backup electric resistance elements to activate. This is dependent on a number of factors, i.e., temperature settings, draw volume and rate, etc. Therefore, DOE is interested in receiving comments on the test

procedure for heat pump water heaters regarding the use of backup electric resistance element(s).

Concurrently, the Department is conducting a rulemaking, independent of today's notice, to propose revised minimum energy conservation standards for eight consumer products, including water heaters. (59 FR 10464, March 4, 1994).

1. Electric and Oil-Fired Instantaneous Water Heaters

The current test procedure does not address testing of electric and oil-fired instantaneous water heaters in that they are not defined in the test procedure. The Department, therefore, proposes to include definitions for these two types of instantaneous water heaters, and to amend the existing language to include the testing of them. Definitions for storage-type water heaters are also modified to differentiate these types from the instantaneous-type water heaters. As a result, oil-fired and electric instantaneous water heaters will be subject to the applicable minimum energy conservation standards of 0.59-(0.0019 × rated storage volume in gallons) for oil-fired water heaters and 0.93-(0.00132 × rated storage volume in gallons) for electric water heaters, respectively. For electric and oil fired instantaneous water heaters, the rated storage volume may be zero. In today's proposed notice, the Department requests comments and data regarding the appropriateness of adding electric and oil-fired instantaneous water heaters to the test procedure and subjecting them to the respective energy conservation standards. See appendix E to subpart B of Title 10 CFR part 430, sections 1.8 and 5.2.

2. Storage-type Water Heaters Having Rated Storage Capacities Less Than 20 Gallons (76 liters)

In a letter to the Department, dated July 17, 1991, the Gas Appliance Manufacturer Association (GAMA) stated that storage-type water heaters having capacities less than 20 gallons (76 liters) are covered by the National Appliance Energy Conservation Act of 1987. The current test procedure does not cover storage-type water heaters having rated storage capacities less than 20 gallons (76 liters) and, therefore, those water heaters are not subject to the minimum efficiency standards. In order to correct this, GAMA requested that the test procedure be revised. DOE proposes to provide coverage for storage-type water heaters of less than 20 gallons (76 liters).

With regard to conducting the 24-hour simulated use test on water heaters having rated storage capacities less than 20 gallons (76 liters), the Department proposes to include the applicable draw schedule accepted by the water heater industry. (See American National Standards Institute/American Society of Heating, Refrigerating and Air-Conditioning Engineers (ASHRAE) Standard 118.2–1993: Method of Testing for Rated Residential Water Heaters.) The total volume withdrawn shall be 24 gallons (91 liters) for units having rated storage capacities greater than or equal to 10 gallons (38 liters), but less than 20 gallons (76 liters). The total volume withdrawn shall be 9 gallons (34 liters) for units having rated storage capacities less than 10 gallons (38 liters). The draw rate shall be 1.0±0.25 gallons per minute (3.8±0.95 liters per minute) for all units having rated storage capacities less than 20 gallons (76 liters). The Department requests comments and data regarding any impact on a manufacturer(s) as a result of extending coverage of the existing minimum energy efficiency standards to storage-type water heaters of less than 20 gallons (76 liters). See appendix E to subpart B of Title 10 CFR part 430, sections 1.11, 5.1.4.1, and 5.1.5.

3. First Hour Rating for Storage-type Water Heaters

Water heaters have historically been selected based on rated storage volume. The rate at which the water heater produces hot water, and whether the water heater uses a lone or multiple heat source, however, is also important when selecting a water heater. For example, a smaller electric water heater having two 4.5-kilowatt elements may provide more hot water over a given time interval than a larger electric water heater having a single 3.8-kilowatt element. The first hour rating seeks to account for the effect of storage capacity, heating rate, and the number of heat sources on the water heater's ability to provide hot water. Ideally, the consumer will use first hour rating to initially identify water heaters that will meet their hot water supply needs. Once the field has been narrowed based on this need, the consumer will then use energy factor, annual operating cost, first cost, warranty information, reputation of manufacturer, etc., in determining which water heater to select.

The first hour rating is not used in computing the efficiency (i.e., energy factor) of water heaters, but is used by the Federal Trade Commission for presenting size ranges in the labeling program for water heaters. It was hoped that this measure would gain recognition as a sizing criterion for consumers in selecting water heaters. As a result, the Department has been conducting a continuous effort to improve the first hour rating method in rulemakings for water heaters. However, the concept of what the first hour rating should represent (i.e., a balance between storage capacity, recovery rate, and mixing characteristics) and how to measure it accurately has proven to be a difficult task. Each attempt at establishing a first hour rating test has led to difficulties (repeatability problem with the 1989 proposal (54 FR 1890, January 17, 1989), and a low estimate of hot water availability for certain water heaters by the 1990 final rule. (55 FR 42162, October 17, 1990).) For example, in a October 15, 1991, letter from GAMA to DOE, GAMA stated that ''Gas Appliance Manufacturers Association members have results establishing first hour ratings in the range of 70 to 75 gallons for 120 gallon models. The calculated first hour rating is significantly less than the amount of water drawn during the first draw.'' This problem with the October 17, 1990, current test method is most evident for large tanks with one heating element because of the greater weighing given by the test procedure to recovery rate relative to storage volume.

To correct the problem of understating hot water production cited by GAMA, the Department requested NIST to evaluate a proposal recommended by GAMA in its October 15, 1991, letter to DOE. GAMA's recommendation would prorate the final draw of the 1990 first hour rating test with respect to a ratio of elapsed times. NIST summarized the advantages and disadvantages of GAMA's recommendation. The major advantages are: The first hour rating would always be greater than or equal to the first draw volume and retesting for FTC labeling may be unnecessary if the needed additional data was collected. The major disadvantages are: The rating would represent a volume of hot water that is greater than or equal to the maximum volume of hot water that can be delivered in an hour (overstating), and it may not differentiate single-element from two-element electric water heaters (recovery capabilities unrecognized). The Department, therefore, concludes that the disadvantages of GAMA's recommendation outweigh the advantages and rejects this proposal.

The Department requested NIST to conduct a second study to correct the problem of understating hot water production. NIST recommended that a revised version of the 1989 test method be proposed. NIST stated its recommendation will correct the understating problem cited by GAMA in

the October 15, 1991, letter, and in addition, will minimize the aforementioned repeatability problem. The Department concurs and today proposes a revised first hour rating method for storage tank-type (including heat pump) water heaters. Section 5.1.4. Included in the proposed first hour rating are: Revisions to the test method for storage tank-type water heaters, hot and cold water mixing characteristics, and the criterion for initiating successive draws when conducting a first hour rating test on heat pump water heaters that use supplemental resistive heating.

In regard to storage tank-type water heaters, for draws initiated prior to one hour (as a result of a thermostat cut-out), the maximum outlet temperature shall be determined for each draw and used for determining when to terminate that draw, i.e., at $T^*_{max,i} - 25°F$, where i corresponds to the draw number. If a recovery is still in progress at one hour, the draw imposed to remove any stored ''hot'' water shall be terminated based on the cut-off temperature used for the previous draw ($T^*_{max,n-1} - 25°F$). In addition, for draws imposed at one hour, the first hour rating shall be the sum of: All the withdrawn volumes and the final withdrawn volume, where the final withdrawn volume is multiplied by the following temperature ratio: $(T^*_{del,n} - T^*_{min,n-1}) / (T^*_{del,n-1} - T^*_{min,n-1})$. The subscripts n and n–1 are used to indicate the final draw and the next-to-last draw, respectively, while $T^*_{min,n-1}$ designates the water temperature at which the next-to-last draw was terminated ($T^*_{min,n-1} = T^*_{max,n-1} - 25°F$). For all other draw volumes, no temperature ratio adjustment factor shall be used.

The Department notes that a temperature ratio can and has been used in the past to compensate for the amount of mixing that occurs between the stored hot water and the entering make-up water during a draw. The greater the volume of make-up water mixed into the outlet stream (while still maintaining an outlet temperature above the criterion of ''hot'' water), the greater the first hour rating. The amount of mixing is typically small and repeatable for designs that introduce make-up water near the bottom of the tank. However, if a water heater uses a thermally compensating dip tube (first discussed in the February 8, 1984, Proposed Rulemaking, 49 FR 4870), or an internal mixing valve, substantial mixing, and thus, a higher and unrealistic first hour rating could occur. At present, DOE is not aware of any currently manufactured water heaters which contain these features. Therefore, DOE is not employing a temperature ratio correction to handle mixing effects. The Department requests comments and data concerning the appropriateness of today's proposal relative to thermally compensating dip tubes, internal mixing valves, or any other mechanism used to increase the amount of mixing of stored hot water and make-up water during a draw.

The Department also notes that with a multiple draw first hour rating test, like the one proposed today, a temperature ratio can be used to compensate for the effect of the test tolerances allowed for the thermostat setting(s) [±5°F (±2.8°C)], and for the make-up water temperature [±2°F (±1.1°C)]. These test tolerances affect the time required for the water heater to recover from a hot water draw. For example, recovery time is quickest if the tank thermostat(s) is set to 130°F (54.4°C), and the make-up water is set at 60°F (15.6°C). Recovery time is slowest for settings at 140°F (60°C) and 56°F (13.3°C). To avoid the potential complication and confusion that would result from an additional temperature ratio correction, however, a test tolerance correction is not included in today's proposal. The Department recognizes that an incentive exists to conduct the first hour rating test with the tank thermostat set at or near 130°F (54.4°C), and with the make-up water at or near 60°F (15.6°C).

Preliminary studies conducted by NIST estimate today's proposed test method is successful in minimizing the repeatability problem to within ± 5 percent relative to the 1989 proposal. The Department today requests comments and data concerning this repeatability issue.

In addition, the Department proposes to modify the existing first hour rating definition so that it differentiates between storage and instantaneous water heaters. Section 1.5.

In regard to heat pump water heaters that use supplemental resistive heating, a draw is currently initiated only after all power to the water heater has been reduced, which corresponds to the case where the compressor has cycled off and any resistive heating has ceased. The Department today proposes a revision to the criterion used to initiate successive draws so that credit is given if this type of water heater provides a partial recovery. The proposed revision would require a draw to be initiated after the thermostat controlling the upper or lone resistive element, or the compressor is satisfied, whichever occurs first. However, this criterion shall be applicable only if the water located vertically above the resistive element thermostat or compressor thermostat is heated to 135 ± 5°F (57.2 ± 2.8°C) when cut-off occurs. The Department requests comments and data on the appropriateness and workability of the proposed changes to the test method for heat pump water heaters that use supplemental resistive heating. See appendix E to subpart B of Title 10 CFR part 430, section 5.1.4.2.

4. Definitions for Heat Pump Water Heaters, Add-on Heat Pump Water Heaters, Integral Heat Pump Water Heaters, Solar Water Heaters, and Heat Pump Water Heater Storage Tanks

The Department proposes to amend the extant definition for heat pump water heaters (section 1.11.3); add definitions of integral heat pump water heater (section 1.11.3.a), add-on heat pump water heaters (section 1.11.3.b), and solar water heaters (section 1.11.5) to differentiate these types of water heaters; and add definition of a heat pump water heater storage tank, i.e., the tank to be used with an add-on heat pump water heater (section 1.6).

B. Kitchen Ranges, Ovens and Microwave Ovens Test Procedures

The test procedures for kitchen ranges, ovens and microwave ovens have remained substantially unchanged since the final rule was published in the **Federal Register** on May 10, 1978 (43 FR 20120). It was amended on April 13, 1979, by prescribing that natural gas or propane would be the test gas used with gas ranges and ovens (44 FR 22418).

Today's proposed amendment will change the annual useful cooking energy output for kitchen ranges, ovens and microwave ovens to make it representative of current United States cooking product usage. In addition, the proposed test procedure will no longer contain annual energy consumption calculations for ranges (cooktop and oven combined), or other combined appliances (multiple conventional ovens, microwave and conventional range combined). The Department is proposing to calculate the annual energy consumption of combined appliances as the sum of the annual energy consumption of each individual component of the unit. Section 4.3. The Department is proposing to incorporate by reference the International Electrotechnical Commission (IEC), Publication 705, and Amendment 2–1993, ''Methods for Measuring the Performance of Microwave Ovens for Household and Similar Purposes,'' Section 4, Paragraph 12 ''Microwave Power Output Measurement,'' Paragraph 13 ''Electrical Power Output Measurement,'' and Paragraph 14

''Efficiency.'' DOE has not proposed test procedures for grill and griddle cook tops; the Department would consider adding test procedures for these products if such exist.

1. Ovens

Today's proposed revision to the oven test procedures lowers the constant for annual useful cooking energy [2] to make it representative of current United States cooking trends. This quantity is being changed for electric to 35.5 kWh (105.5 MJ) per year from 47.09 kWh (169.5 MJ) per year; for gas, to 124,200 BTU (131,038 kJ) per year from 160,700 BTU (169,547 kJ) per year. Sections 4.1.2.1.1, 4.1.2.1.2, and 4.1.4. Lawrence Berkeley Laboratory of Berkeley, California calculated this constant from several utility studies. These results are presented in the Technical Support Document: Energy Efficiency Standards for Consumer Products, Volume 2, November 1993, DOE/EE–0009, Vol. 2 of 3.

In addition, the Department proposes to eliminate the requirement to use a standard continuous flow calorimeter for gas cooking products because of the difficulty of locating this product. The instrument to be substituted for the standard continuous flow calorimeter is left to the discretion of the manufacturer; although, it is required that the heating value of natural or propane gas shall be measured with an instrument and associated indicator readout device of a maximum error no greater than ±.5 percent of the measured value and a resolution of ±.2 percent or less of the full scale reading of the indictor instrument. Section 2.9.4.

2. Cook Tops

The proposed revision to the cook top test procedures changes the constant for annual useful cooking energy [3] to make it representative of current United States cooking trends. This quantity is being lowered for electric to 209 kWh (752.4 MJ) per year from 277.7 kWh (1000 MJ) per year; for gas, to 732,500 BTU (772,800 kJ) per year from 947,500 BTU (999,600 kJ) per year. Lawrence Berkeley Laboratory of Berkeley, California calculated this constant from several utility studies. These results are presented in the Technical Support Document: Energy Efficiency Standards for Consumer Products, Volume 2, November 1993, DOE/EE–0009, Vol. 2 of 3.

3. Microwave Ovens

The proposed changes to the microwave oven test procedures are in response to a petition for rulemaking from the Association of Home Appliance Manufacturers (AHAM) to use the International Electrotechnical Commission standard as the DOE test procedure. The current DOE test procedure is based on a 1975 version of the International Electrotechnical Commission standard. The Association of Home Appliance Manufacturers cited the following deficiencies with the DOE test procedure:

(1) Errors caused by evaporative cooling of the water and heat absorption of the water containers during the heating period, and

(2) Errors caused by the constantly changing sodium chloride concentration due to sodium chloride precipitating out of solution.

The International Electrotechnical Commission issued Publication 705, and Amendment 2–1993 entitled ''Method for Measuring the Performance of Microwave Ovens for Household and Similar Purposes'' in 1993. The Department asked the National Institute of Standards and Technology to perform tests using the 1993 International Electrotechnical Commission test procedure. The National Institute of Standards and Technology found the test procedure to be acceptable for determining power output and efficiency, and recommended that the Department of Energy incorporate by reference the International Electrotechnical Commission 705 Amendment 2–1993 test procedure for these purposes. In computing energy consumption, the International Electrotechnical Commission 705 Amendment 2–1993 uses a watt meter and timer, ignoring transients, to obtain measurements from which energy consumption can be calculated. The Department believes that because of start-up transients, the use of a watt-hour meter is more accurate; therefore, today's notice includes the use of a watt-hour meter, which is not found in the IEC 1993 test procedure, to obtain energy consumption.

The annual useful cooking energy in the extant test procedure is 34.2 kWh (123 MJ) per year based on 1976 data. In the Eight Product rulemaking (59 FR 10464, March 4, 1994), DOE used an annual useful cooking energy of 145.8 kWh per year in its analysis. Technical Support Document: Energy Efficiency Standards for Consumer Products, Volume 2, November 1993, DOE/EE–0009, Vol. 2 of 3, pp. 1–49. After reviewing several utility studies and comments, DOE is proposing to change the annual useful cooking energy [4] from 34.2 kWh (123 MJ) per year to 77.3 kWh (278.3 MJ) per year. This revision to the annual useful cooking energy reflects current U.S. microwave cooking usage. This will change the value of O_m in the test procedure to 77.3 kWh/yr [143.2 kWh/yr × 0.54 = 77.3 kWh/yr] (278.3 MJ/yr). (See appendix I to subpart B of title 10 CFR part 430, ''Uniform Test Method for Measuring the Energy Consumption of Conventional Ranges, Conventional Cooking Tops, Conventional Ovens, and Microwave Ovens,'' sections 4.4.3 and 4.4.5). Lawrence Berkeley Laboratory of Berkeley, California calculated this constant from an average of six utility studies. These studies include: Lawrence Berkeley Laboratory, ''Baseline Data for the Residential and Development of a Residential Forecasting Database,'' LBL 33717, May 1994; American Electric Power, ''Utility Estimates of Household Appliance Electricity Consumption,'' 1992; Southern California Edison, ''Residential Appliance End-Use Survey,'' 1990 and 1991; Electric Power Research Institute, ''Residential End-Use Energy Consumption: A Survey of Conditional Demand Estimates,'' CU–6487, October 1989; and the Sierra Pacific Power Company, ''Integrating EIP and HES5 Information for Estimating End-Use Energies,'' March 1988. The microwave oven annual energy consumption proposed in today's notice also includes the energy used by the clock thus, eliminating the necessity to disable the clock during test setup.

C. Clothes Washer Test Procedure

The Department published the clothes washer test procedure on September 28, 1977, (42 FR 49802) and subsequently on June 29, 1979, (44 FR 37938) editorial changes were made. On December 22, 1993, (58 FR 67710) the Department published a proposed amendment to the clothes washer test procedure to address washers which offer a warm rinse lock-out feature. Today's proposed amendments to the clothes washer test procedure will

[2] The annual useful cooking energy is energy input to an oven which is transferred to the product being cooked and is a constant used to find the annual energy consumption and the energy factor. The annual energy consumption is calculated by multiplying the constant by the ratio of test energy consumption to the energy used to heat the test block. The energy factor is the ratio of the constant to the total annual energy consumption.

[3] See footnote 2, supra.

[4] The annual useful cooking energy is energy input to an oven which is transferred to the product being cooked and is a constant used to find the annual energy consumption and the energy factor. The annual energy consumption is calculated by multiplying the constant by the ratio of test energy consumption to the energy used to heat the test water load. The energy factor is the ratio of the constant to the total annual energy consumption.

address issues that are independent from the temperature selection lock-out feature.

Today's proposed amendments to the clothes washer test procedure do not alter the energy factor of any existing clothes washer that minimally complies with the existing efficiency standard.

In the Advance Notice of Proposed Rulemaking for energy conservation standards for clothes washers (59 FR 56423, November 14, 1994), the Department said it would consider an energy conservation standard that includes water extraction. The Department believes that mechanical water extraction in a clothes washer is much more cost effective and efficient than thermal extraction in a clothes dryer. The Department proposes today's procedures and calculations for water extraction in clothes washers that would be used in the standards rulemaking for consideration of water extraction. Any analysis for clothes dryer efficiency standards would account for the impact of moisture retention of clothes entering the clothes dryer.

The Department of Energy today proposes to modify the clothes washer test procedure as follows:

1. Title 10 CFR part 430, subpart B, section 430.22(j).

The number of representative average-use cycles per year is presently 416, based on Proctor and Gamble survey data from 1974–75. New Proctor and Gamble survey data has indicated the number of cycles consumers use on a yearly basis has decreased. Thus, the Department is proposing to revise the representative average-use cycles to 392 per year.[5] This change lowers annual energy use and annual energy cost.

2. Title 10 CFR part 430, subpart B, appendix J.

a. General test procedure clarification.

The Department is proposing to add a definition for ''agitator'' (section 1.1). The existing test procedure mentions ''agitator'' but, does not provide a definition.

The Department is proposing to add a definition for ''thermostatically controlled valves'' (section 1.19). The existing test procedure mentions ''thermostatically controlled valves'' but, does not provide a definition.

The Department is proposing to replace the definition for a ''top-loader'' clothes washer with ''top-loader-horizontal-axis clothes washer'' (section 1.21) and ''top-loader-vertical-axis clothes washer'' (section 1.22). The Department has become aware of top-loading-horizontal-axis clothes washers which are readily available in other countries. These clothes washers have not yet become available in the U.S. market; however, the Department wants to provide nomenclature for this type of clothes washer.

The Department is proposing to delete the following definitions: ''AHAM'' (section 1.1), ''HWL–1'' (section 1.7) and ''HLW–2EC'' (section 1.8). The revised test procedure proposed in today's notice does not use these terms.

The Department is proposing to delete the requirement specified in existing test procedure section 2.2: ''Disconnect all console lights or other lighting systems on the clothes washer, which do not consume more than 10 watts during the clothes washer test cycle.'' The Department believes that this requirement is burdensome.

The Department is proposing to add a new requirement for ''Agitation and spin speed settings'' (section 2.11). The existing test procedure does not specify agitation or spin speed settings. The Department is aware of clothes washers which allow selective agitation and spin speed settings independent of the normal cycle. Therefore, the proposed test procedure specifies requirements for clothes washers with these features.

The Department is proposing to change the symbol for density from ''d'' to ''ρ.'' The requirement to use the density of water at 140°F was deleted, so that the density of water at the measured temperature will be used.

The Department is proposing to clarify the requirement for ''maximum fill'' testing. The Department wants to ensure that testing of a clothes washer's energy consumption accounts for the clothes washer's maximum fill capability. The Department is proposing to revise the test procedure to add ''available on the clothes washer'' after the test procedure requirement for ''maximum fill'' (sections 3.2.1.2 and 3.2.2.1).

The Department is aware that some clothes washers may have similarly labeled wash/rinse temperature selections, i.e., ''automatic warm/cold'' and ''warm/cold,'' on the same machine, which actually provide different wash/rinse water temperatures. Under this scenario, the ''automatic warm/cold'' temperature selection has wash/rinse water temperature adjusted through the use of thermostatically controlled valves, whereas the ''warm/cold'' temperature selection is ''traditional,'' in that control of temperature is based on preset orifices. The Department believes that these machines are offering additional temperature selections. Therefore, instead of developing additional Temperature Utilization Factors, the Department is proposing to require the use of the temperature selection which results in the largest amount of hot water consumption for the energy consumption calculations (section 4.1.1.1). The Department believes the use of the temperature selection which results in the largest amount of hot water consumption is specified in the existing test procedure (''hottest setting available'' in section 3.2.2.2). The Department's proposal is intended to remove any ambiguity regarding the testing of clothes washers equipped with this type of temperature selection. The Department welcomes comments regarding this issue.

b. Test procedure revisions to include changes from approved Waivers.

The Department has granted two Petitions for Waivers to the clothes washer test procedure. Both Waivers were for water-heating clothes washers. New Harmony Systems Corporation (New Harmony) was issued a Waiver (Case No. CW–001) by Decision and Order, published on April 4, 1994. (59 FR 15710). Asko Incorporated (Asko) was issued a Waiver (Case No. CW–002) by Decision and Order, published on April 4, 1994. (59 FR 15719).

The Department is proposing definitions for ''nonwater-heating clothes washer'' (section 1.11) and ''water-heating clothes washer'' (section 1.24) to differentiate different types of clothes washers.

The Department is proposing to revise the requirements for ''electrical energy supply'' (section 2.2) to allow for higher voltage clothes washers. Furthermore, voltage tolerance has been increased from approximately 1.6 percent to 2 percent to reduce testing burden. This increase in tolerance will not reduce the accuracy of energy consumption testing/reporting.

The Department is proposing to add procedures for testing water-heating clothes washers which have variable temperature controls (sections 3.2.2 through 3.2.2.4). The Department is proposing to test water-heating clothes washers at the coldest and hottest setting available on the clothes washer in addition to the existing test procedure temperature settings for warm (nominally 100°F) and hot (nominally 140°F).

The proposed temperature use factors for water-heating clothes washers are based on revised temperature use factors for a three temperature selection nonwater-heating clothes washer. The Department believes that the existing TUFs for a three temperature selection nonwater-heating clothes washer are

[5] 392 represents the average number of cycles per year from 1986 through 1994, obtained by P & G survey data and provided to the Department via letter dated September 2, 1994.

appropriate for a water-heating clothes washer, except that some consumers will occasionally choose to use a temperature setting higher than the ''hot'' setting since it is available to them. The existing temperature use factors for ''cold/cold'' (15 percent), ''warm/warm or warm/cold'' (55 percent) and ''hot/warm or hot/cold'' (30 percent) have been split into four TUFs, one of 15 percent for the ''coldest'' setting, one of 55 percent for the ''warm'' setting, one of 25 percent for ''hot'' and one of 5 percent for the ''hottest'' setting. The Department does not have data regarding the 5 percent value, but is proposing to use it as originally proposed by New Harmony. The Department welcomes comments on this proposal.

The Department is proposing tighter tolerances for the supply water temperature, and the ''warm'' and ''hot'' settings for water-heating clothes washers as compared to nonwater-heating clothes washers. The Department is proposing that the supply water temperature be set at ''a minimum of 55°F (12.8°C) and a maximum of 60°F (15.6°C).'' The ''warm'' temperature shall be set at ''a minimum of 100°F (37.8°C) and a maximum of 105°F (40.6°C)'' and the ''hot'' temperature shall be set at ''a minimum of 140°F (60°C) and a maximum of 145°F (62.8°C).'' These tighter tolerances are required for water-heating clothes washers to reduce variability in energy consumption testing/reporting and to ensure that a minimum temperature rise is tested. The temperature tolerance and minimum temperature rise issues are unique to a water-heating clothes washer because the energy to raise the water temperature is measured from electrical consumption versus being calculated as it is for nonwater-heating clothes washers.

Since the issue of machine-controlled water fill capability has been raised by the Asko Waiver, the Department wants to provide a provision for the possibility of any type of clothes washer having this feature. Thus, the Department is proposing to add the definition of ''machine-controlled water fill capability'' (section 1.7) to the test procedure. In addition, the Department is proposing a revision to the ''top-loader-vertical-axis clothes washer'' section (section 2.8.1) to require the use of a test load for clothes washers with a machine-controlled water fill capability feature. Therefore, a clothes washer equipped with machined-controlled water fill capability will be tested for maximum fill energy consumption using a 7 pound (3.18 kg) test load and for minimum fill energy consumption using a 3 pound (1.36 kg) test load. The Department believes that consumers will occasionally wash loads which are larger than 7 pounds (3.18 kg) and will also wash loads which are smaller than 3 pounds (1.36 kg). This provision will allow for testing of clothes washers that may have this feature. The Department welcomes comments on this proposed provision.

c. Water consumption and extraction testing.

The Department is concerned about water conservation and wishes to provide for a procedure to determine the water consumption of clothes washers. The Department believes, consistent with the Energy Policy Act of 1992, Pub. L. 102–486, that water conservation is important, and a need may exist to determine actual water use.

Therefore, the Department is proposing to add definitions, testing procedures, and calculations regarding water use. Additionally, for those water or sewage utilities wishing to include particular clothes washers in rebate programs, the DOE test procedure would provide a standardized means of testing for water consumption.

The Department is proposing to add a definition for a ''Water consumption factor'' (section 1.23). Calculations for the water consumption factor are provided in section 4.3. The water consumption factor is the ratio of the clothes washer capacity divided by the weighted per-cycle water consumption. The weighted per-cycle water consumption is the actual weighted volume of water that a particular clothes washer consumes. This measurement could be used to estimate water consumption on an annual basis. The Department welcomes comments on this proposal.

The Department is concerned about water extraction in the clothes washers' final spin. The Department believes that mechanical extraction in a clothes washer is more efficient than thermal extraction in a clothes dryer. Therefore, the Department wishes to provide for a procedure measuring the water extraction in clothes washers. The Department is proposing to add a definition for ''moisture removal energy'' (section 1.10). Moisture removal energy equals the weight of the residual water in the test load at the completion of the clothes washer cycle multiplied by the nominal energy needed to remove moisture using a representative clothes dryer efficiency. The calculations for moisture removal energy are provided in the proposed test procedure section 4.2. In today's notice, the Department requests comments, data, and other relevant information regarding the definition and calculation of the moisture removal energy. The Department is proposing a value of 0.5 Kwh/lb as the energy efficiency of a representative clothes dryer to remove moisture. The Department also is interested in comments as to the validity and usage of this value.

The Department is interested in developing a new energy descriptor, called a modified energy factor, which will include moisture removal energy, for possible future standard use. This new descriptor will provide a means of determining and comparing the entire energy consumption of clothes washers. Therefore, the Department is proposing to add a definition for ''modified energy factor'' (section 1.9). The modified energy factor equals the ratio of the capacity of the clothes washer divided by the total energy, which consists of the mechanical, hot water and moisture removal energy. The calculations for the modified energy factor are provided in the proposed test procedure section 4.4. The Department requests comments, data, and other relevant information regarding the definition and calculation of this new energy descriptor.

D. Reporting Requirements

The Department is proposing to revise the reporting requirements for clothes washers, dishwashers and clothes dryers. The present regulations do not require the reporting of the energy factors for these products. Prior to the May 14, 1991 final rule for clothes washers, dishwashers and clothes dryers, there were no performance standards for these products. Now, since there are performance standards for these products, the Department is proposing to include certification reporting. Section 430.62(a)(2).

III. Environmental Review

Pursuant to section 7(a) of the Federal Energy Administration Act of 1974 (Pub. L. 93–275, 15 U.S.C. 766(a)), a copy of this notice was submitted to the Administrator of the Environmental Protection Agency for the Administrator's comments concerning the impacts of this proposal on the quality of the environment.

DOE has concluded that this proposed rule falls into a class of actions (categorical exclusion A5) that are categorically excluded from NEPA review because they would not individually or cumulatively have a significant impact on the human environment, as determined by DOE's regulations (10 CFR part 1021, Subpart D) implementing the National Environmental Policy Act of 1969 (42 U.S.C. 4321, 4331–35, 4341–47 (1976)).

Therefore, this proposed rule does not require an environmental impact statement or an environmental assessment pursuant to NEPA.

IV. Regulatory Review

Today's regulatory proposal has been determined not to be a ''significant regulatory action'' under Executive Order 12866, ''Regulatory Planning and Review,'' (58 FR 51735, October 4, 1993). Accordingly, today's action was not subject to review under the Executive Order by the Office of Information and Regulatory Affairs.

V. Regulatory Flexibility Review

The proposed rule has been reviewed under the Regulatory Flexibility Act, Pub. L. 96–354 (42 U.S.C. 601–612) which requires preparation of a regulatory flexibility analysis for any regulation that will have a significant economic impact on a substantial number of small entities, i.e., small businesses and small government jurisdictions. The proposed rule affects manufacturers of water heaters; kitchen ranges, ovens, and microwave ovens; and clothes washers. The test procedures would not have significant economic impact, but rather, would provide common testing methods. DOE accordingly certifies that the proposed rule would not, if promulgated, have a significant economic impact on a substantial number of small entities and that preparation of a regulatory flexibility analysis is not warranted.

VI. ''Takings'' Assessment Review

It has been determined pursuant to Executive Order 12630 (52 FR 8859, March 18, 1988) that this proposed regulation, if adopted, would not result in any takings which might require compensation under the Fifth Amendment to the United States Constitution.

The Department believes that test procedures implementing a long-established statutory mandate in a manner calculated to minimize adverse economic impacts does not constitute a ''taking'' of private property. Thus, testing under the appliance standards program does not invoke the provisions of E.O. 12630.

VII. Federalism Review

Executive Order 12612 (52 FR 41685, October 30, 1987) requires that regulations or rules be reviewed for any substantial direct effects on States, on the relationship between the Federal Government and the States, or on the distribution of power and responsibilities among various levels of Government. If there are sufficient substantial direct effects, the Executive Order 12612 requires the preparation of a Federalism assessment to be used in decisions by senior policymakers in promulgating or implementing the regulation.

DOE has identified a substantial direct effect that today's proposed rule would have on State governments. It would initially preempt inconsistent State regulations. However, DOE has concluded that such effect is not sufficient to warrant preparation of a federalism assessment for the following reason: the Act provided for subsequent State petitions for exemption. Thus, a determination as to whether a State law prevails must be made on a case-by-case basis using criteria set forth in the Act. When DOE receives such a petition, it will then be appropriate to consider preparing a federalism assessment consistent with the criteria in the Act.

VIII. Review Under Section 32 of the Federal Energy Administration Authorization Act

The test procedure amendments proposed today incorporate the International Electrotechnical Commission Publication 705, and Amendment 2–1993, ''Methods for Measuring the Performance of Microwave Ovens for Household and Similar Purposes,'' section 4, Paragraph 12 ''Microwave Power Output Measurement,'' Paragraph 13 ''Electrical Power Output Measurement,'' and Paragraph 14 ''Efficiency'' to determine the output power and efficiency for microwave ovens.

Pursuant to section 301 of the Department of Energy Organization Act (Pub. L. 95–91), DOE is required to comply with section 32 of the Federal Energy Authorization Act of 1974 (15 U.S.C. 788), which imposes certain requirements where a proposed rule contains commercial standards or authorizes or requires the use of such standards.

The findings required of DOE by section 32 of the Act serve to alert the public and DOE regarding the use and background of commercial standards in a proposal and through the rulemaking process. They allow interested persons to make known their views regarding the appropriateness of the use of any particular commercial standard in a proposed rulemaking.

DOE has evaluated the promulgation of International Electrotechnical Commission Publication 705, and Amendment 2–1993, in light of the public participation criteria of section 32(b). The Department is unable to conclude whether development of these standards fully complied with section 32(b) regarding the manner of public participation.

As required by section 32(c), DOE will consult with the Attorney General and the Chairman of the Federal Trade Commission concerning the impact of these standards on competition, prior to prescribing final test procedures.

IX. Paperwork Reduction Act Review

No new information or recordkeeping requirements are imposed by this rulemaking. Accordingly, no OMB clearance is required under the Paperwork Reduction Act (44 U.S.C. 3501 *et seq.*).

X. Review Under Executive Order 12778

Section 2 of Executive Order 12778 instructs each agency to adhere to certain requirements in promulgating new regulations and reviewing existing regulations. These requirements, set forth in sections 2(a) and (b)(2), include eliminating drafting errors and needless ambiguity, drafting the regulations to minimize litigation, providing clear and certain legal standards for affected conduct, and promoting simplification and burden reduction. Agencies are also instructed to make every reasonable effort to ensure that the regulation specifies clearly any preemptive effect, effect on existing Federal law or regulation, and retroactive effect; describes any administrative proceedings to be available prior to judicial review and any provisions for the exhaustion of such administrative proceedings; and defines key terms. The DOE certifies that today's proposed rule meets the requirements of sections 2(a) and (b)(2) of Executive Order 12778.

XI. Public Comment Procedures

A. Written Comment Procedures

Interested persons are invited to participate in the rulemaking by submitting data, comments, or information with respect to the proposed test procedures set forth in this notice to the address indicated at the beginning of the notice.

Comments should be identified both on the envelope and on the documents as ''Water Heaters; Kitchen Ranges, Ovens, and Microwave Ovens; and Clothes Washers Test Procedures, Docket No. EE–RM–94–230.'' Ten (10) copies are requested to be submitted. In addition, the Department requests that an electronic copy (3½″ diskette) of the comments on WordPerfectTM 5.1 be provided. All submittal received by the date specified at the beginning of this notice will be considered by the Department of Energy before final action is taken on the proposed amendments.

Pursuant to the provisions of 10 CFR 1004.11, any person submitting information which he or she believes to be confidential and exempt by law from public disclosure should submit one complete copy of the document and ten (10) copies, if possible, from which the information believed to be confidential has been deleted. The Department of Energy will make its own determination with regard to the confidential status of the information and treat it according to its determination.

Factors of interest to DOE when evaluating requests to treat as confidential information that has been submitted include: (1) A description of the items; (2) an indication as to whether and why such items are customarily treated as confidential within the industry; (3) whether the information is generally known by or available from other sources; (4) whether the information has previously been made available to others without obligation concerning its confidentiality; (5) an explanation of the competitive injury to the submitting person which would result from public disclosure; (6) an indication as to when such information might lose its confidential character due to the passage of time; and (7) why disclosure of the information would be contrary to the public interest.

B. Public Hearing

1. Procedures for Submitting Requests to Speak

The time and place of the public hearing are indicated at the beginning of this notice. The Department of Energy invites any person who has an interest in today's proposed rule, or who is a representative of a group or class of persons that has an interest in the proposed test procedures, to make a written request for an opportunity to make an oral presentation. Such requests should be directed to the address indicated at the beginning of this notice. Requests may be hand delivered to such address between the hours of 8 a.m. and 4 p.m., Monday through Friday, except Federal holidays. Requests should be labeled ''Test Procedure for Water Heaters; Kitchen Ranges, Ovens and Microwave Ovens; and Clothes Washers; and Reporting Requirements for Clothes Washers, Clothes Dryers, and Dishwashers, Docket No. EE–RM–94–230,'' both on the document and on the envelope.

The person making the request should briefly describe the interest concerned and state why he or she, either individually or as a representative of a group or class of persons that have such an interest, is an appropriate spokesperson, and give a telephone number where he or she may be contacted.

Each person selected to be heard is requested to submit an advance copy of their statement prior to the hearing as indicated at the beginning of this notice. In the event any persons wishing to testify cannot meet this requirement, that person may make alternative arrangements with the Office of Hearings and Dockets in advance by so indicating in the letter requesting to make an oral presentation.

2. Conduct of Hearing

The Department of Energy reserves the right to select the persons to be heard at the hearing, to schedule the respective presentations, and to establish the procedures governing the conduct of the hearing. The length of each presentation is limited to twenty (20) minutes.

A DOE official will be designated to preside at the hearing. The hearing will not be a judicial or an evidentiary-type hearing, but will be conducted in accordance with 5 U.S.C. 553 and section 336 of the Act. At the conclusion of all initial oral statements at each day of the hearing, each person who has made an oral statement will be given the opportunity to make a rebuttal statement, subject to time limitations. The rebuttal statement will be given in the order in which the initial statements were made. The official conducting the hearing will accept additional comments or questions from those attending, as time permits. Any interested person may submit, to the presiding official, written questions to be asked of any person making a statement at the hearing. The presiding official will determine whether the question is relevant, and whether time limitations permit it to be presented for answer.

Any further procedural rules regarding proper conduct of the hearing will be announced by the presiding official.

A transcript of the hearing will be made, and the entire record of this rulemaking, including the transcript, will be retained by DOE and made available for inspection at the DOE Freedom of Information Reading Room, U.S. Department of Energy, Forrestal Building, Room 1E–190, 1000 Independence Avenue, SW., Washington, DC 20585, (202) 586–6020, between the hours of 9 a.m. and 4 p.m., Monday through Friday, except Federal holidays. Any person may purchase a copy of the transcript from the transcribing reporter.

C. Issues for Public Comment

The Department of Energy is interested in receiving comments and data concerning the accuracy and workability of these test procedures. Also, the Department welcomes discussion on improvements or alternatives to these approaches. In particular, DOE is interested in gathering comments on the following:

- The appropriateness of including test procedures for electric and oil instantaneous water heaters.
- The impacts on manufacturer(s) as a result of extending coverage of the existing minimum energy efficiency standards for electric and oil-fired instantaneous water heaters.
- The appropriateness of including the draw schedule and draw rate of the American National Standards Institute/American Society of Heating, Refrigerating and Air Conditioning Engineers Standard 118.2–1993 for storage water heaters with rated storage capacities less than 20 gallons (76 liters).
- The impacts on manufacturer(s) as a result of extending coverage of the existing minimum energy efficiency standards for storage-type water heaters of less than 20 gallons (76 liters).
- The appropriateness of the proposed definition, first hour rating, for instantaneous and storage water heaters.
- The appropriateness of the proposed first hour rating test method for storage tank-type water heaters.
- The appropriateness of a first hour rating which might give unrealistic results for water heaters containing thermal compensating dip tubes or internal mixing valves.
- The appropriateness of the proposed definitions: heat pump water heater, add-on heat pump water heater, integral heat pump water heater, solar water heater, and heat pump water heater storage tank.
- The adequateness of the test provisions for heat pump water heaters regarding the usage of backup electric resistance element(s).
- The appropriateness of the proposed test energy method to determine the output energy for microwave ovens.
- The appropriateness to incorporate by reference the International Electrotechnical Commission Publication 705, and Amendment 2–1993, ''Methods for Measuring the Performance of Microwave Ovens for Household and Similar Purposes,'' section 4, Paragraph 12 ''Microwave Power Output Measurement,'' Paragraph 13 ''Electrical Power Output

Measurement,'' and Paragraph 14 ''Efficiency'' as a test method for microwave ovens.

• The appropriateness of the proposed definitions: Agitator, machine-controlled water fill capability, modified energy factor, moisture removal factor, nonwater-heating clothes washer, thermostatically controlled valves, top-loader-horizontal-axis clothes washer, top- loader-vertical-axis clothes washer, water consumption factor and water-heating clothes washer.

• The appropriateness of the proposed test and performance measurement methods for water-heating clothes washers.

• The appropriateness of using 5 percent and 25 percent to prorate the ''hottest'' available setting and the ''hot'' setting, respectively, for water-heating clothes washers.

• The appropriateness of a new descriptor (moisture removal energy) to determine the efficiency of moisture removal from the test load.

• The appropriateness of a new descriptor (water consumption factor) to determine the water consumption of clothes washers.

• The appropriateness of a new efficiency descriptor (modified energy factor) for possible future use in establishing energy conservation standards for clothes washers.

List of Subjects in 10 CFR Part 430

Administrative practice and procedure, Energy conservation, Household appliances, Incorporation by reference.

Issued in Washington, DC, February 8, 1995.

Christine Ervin,

Assistant Secretary, Energy Efficiency and Renewable Energy.

For the reasons set forth in the preamble, part 430 of chapter II of title 10, of the Code of Federal Regulations is proposed to be amended as set forth below:

PART 430—ENERGY CONSERVATION PROGRAM FOR CONSUMER PRODUCTS

1. The authority citation for Part 430 continues to read as follows:

Authority: 42 U.S.C. 6291–6309.

2. Section 430.22 is amended by revising paragraph (a)(2)(ii) and adding paragraph (a)(3)(iv) and adding item number 13 to paragraph (a)(4) to read as follows:

§ 430.22 Reference sources.

(a) * * *

(2) * * *

(ii) U.S. Department of Energy, Office of Energy Efficiency and Renewable Energy, Hearings and Dockets, Forrestal Building, 1000 Independence Avenue, SW., Washington, DC 20585.

(3) * * *

(iv) Copies of the International Electrotechnical Commission Publication can be obtained from the American National Standards Institute, 11 West 42nd Street, New York, New York 10036, (212) 642–4936.

(4) * * *

13. International Electrotechnical Commission Publication 705, and Amendment 2–1993, ''Methods for Measuring the Performance of Microwave Ovens for Household and Similar Purposes,'' Section 4, Paragraph 12 ''Microwave Power Output Measurement,'' Paragraph 13 ''Electrical Power Output Measurement,'' and Paragraph 14 ''Efficiency.''

§ 430.23 [Amended]

3. Section 430.23, Test procedures for measures of energy consumption, is amended to read as follows:

A. In § 430.23(i)(1)(iii) (second sentence) replace ''4.3.1, 4.2.2, 4.1.2.5, or 4.1.2.6, 4.4.3, and 4.5.1.3'' with ''4.3, 4.2.2, 4.1.2, and 4.4.3.''

B. In § 430.23(i)(2) (first sentence) replace ''4.2.1.3, 4.1.3 and 4.4.2'' with ''4.2.1, 4.1.3, and 4.4.4.''

C. In § 430.23(i)(3) (first sentence) replace ''4.3.2, and 4.5.2'' with ''4.3'' and replace the comma following ''subpart'' with a period and remove the remainder of the sentence.

D. In § 430.23(i)(4) (first sentence) replace ''4.3.3, 4.2.3, 4.1.4, 4.4.4 and 4.5.3'' with ''4.3, 4.2.3, 4.1.4, 4.4.5.''

E. In § 430.23(j)(1)(i)(A) replace ''416'' with ''392''.

F. In § 430.23(j)(1)(i)(B) replace ''determined according to 4.6'' with ''determined according to section 4.1.1.6 (nonwater-heating) or 4.1.2.2 (water-heating)''.

G. In § 430.23(j)(1)(ii) (introductory text) replace ''When gas-heated or oil-heated water is used, the product of: the representative average-use cycle of 416 cycles per year'' with ''When gas-heated or oil-heated water is used, the product of: the representative average-use cycle of 392 cycles per year (for nonwater-heating clothes washers)''.

H. In § 430.23(j)(1)(ii)(A) replace ''4.4'' with ''4.1.1.4''.

I. In § 430.23(j)(1)(ii)(B) replace ''in Btu per cycle, determined according to 4.5'' with ''in Btu per cycle (MJ per kwh), determined according to section 4.1.1.5''.

J. In § 430.23, paragraph (j)(2) is revised to read as follows:

§ 430.23 Test procedures for methods of energy consumption.

* * * * *

(j) * * *

(2)(i) The energy factor for automatic and semi-automatic clothes washers shall be the quotient of the cubic foot (liter) capacity of the clothes container as determined in 3.1 of appendix J to this subpart divided by the clothes washer energy consumption per cycle, expressed as: (for nonwater-heating clothes washers) the sum of the machine electrical energy consumption and the hot water energy consumption as determined in 4.1.1.4 and 4.1.1.3, respectively, of appendix J to this subpart; (or for water-heating clothes washers) the energy consumption as determined in 4.1.2.2, of appendix J to this subpart. The result shall be rounded off to the nearest 0.01 cubic foot per kilowatt-hour per cycle (0.01 liter per kilowatt-hour per cycle).

(ii) The modified energy factor for automatic and semi-automatic clothes washers is determined in accordance with section 4.4.1 (nonwater-heating clothes washers) or 4.4.2 (water-heating clothes washers), of appendix J to this subpart. The result shall be rounded off to the nearest 0.01 cubic foot per kilowatt-hour per cycle (0.01 liter per kilowatt-hour per cycle).

(iii) The water consumption factor for automatic and semi-automatic clothes washers is determined in accordance with section 4.3.3, of appendix J to this subpart. The result shall be rounded off to the nearest 0.001 cubic foot per gallon per cycle (0.001 liter per liter per cycle).

* * * * *

4. Appendix E to subpart B of part 430 is revised to read as follows:

Appendix E to Subpart B of Part 430—Uniform Test Method for Measuring the Energy Consumption of Water Heaters

1. Definitions

1.1 *Cut-in* means the time or water temperature when a water heater thermostat has acted to increase the energy or fuel input to the heating elements, compressor, or burner.

1.2 *Cut-out* means the time or water temperature when a water heater thermostat has acted to reduce to a minimum the energy or fuel input to the heating elements, compressor, or burner.

1.3 *Design Power Rating* means the nominal power rating that a water heater manufacturer assigns to a particular design of water heater, expressed in kilowatts or Btu (KJ) per hour as appropriate.

1.4 *Energy Factor* means a measure of water heater overall efficiency.

1.5 *First Hour Rating* is an estimate of the maximum volume of ''hot'' water that a storage-type water heater can supply within an hour that begins with the water heater

fully heated (i.e., all thermostats satisfied). For instantaneous water heaters, first hour rating designates the maximum volume of hot water that can be supplied during any hour.

1.6 *Heat Pump Water Heater Storage Tank* is an insulated tank designed, wired and labeled for use exclusively with an add-on heat pump water heater or solar water heater and being unable to operate without an add-on heat pump water heater or solar water heater. The heat pump water heater storage tank may contain one or two thermostats and up to two electric resistance heating elements, and has a manufacturer's rated capacity of 120 gallons (450 liters) or less. When tested with the add-on heat pump water heater or solar water heater inoperative, the heat pump water heater storage tank shall have an energy factor that is determined in accordance with the test procedure for water heaters.

1.7 *Heat Trap* means a device which can be integrally connected or independently attached to the hot and/or cold water pipe connections of a water heater such that the device will develop a thermal or mechanical seal to minimize the recirculation of water due to thermal convection between the water heater tank and its connecting pipes.

1.8 *Instantaneous-Type Water Heaters.*

1.8.1 *Electric Instantaneous Water Heater* means a water heater that uses electricity as the energy source, initiates heating based on sensing water flow, is designed to deliver water at a controlled temperature of less than 180°F (82°C), has a maximum input of 12 kilowatts or less, and has a manufacturer's specified storage capacity of less than 2 gallons (8 liters). The unit may use a fixed or variable power input.

1.8.2 *Gas Instantaneous Water Heater* means a water heater that uses gas as the energy source, initiates heating based on sensing water flow, is designed to deliver water at a controlled temperature of less than 180°F (82°C), has an input greater than 50,000 Btu per hour (53 MJ per hour) but less than 200,000 Btu per hour (210 MJ per hour), and has a manufacturer's specified storage capacity of less than 2 gallons (8 liters). The unit may use a fixed or variable burner input.

1.8.3 *Oil Instantaneous Water Heater* means a water heater that uses oil as the energy source, initiates heating based on sensing water flow, is designed to deliver water at a controlled temperature of less than 180°F (82°C), has an input greater than 50,000 Btu per hour (53 MJ per hour) but less than 200,000 Btu per hour (210 MJ per hour), and has a manufacturer's specified storage capacity of less than 2 gallons (8 liters). The unit may use a fixed or variable burner input.

1.9 *Recovery Efficiency* means the ratio of energy delivered to the water to the energy content of the fuel consumed by the water heater.

1.10 *Standby* means the time during which water is not being withdrawn from the water heater. There are two standby time intervals used within this test procedure: $\tau_{stby,1}$ represents the elapsed time between the time at which the maximum mean tank temperature is observed after the sixth draw and subsequent recovery and the end of the 24-hour test; $\tau_{stby,2}$ represents the total time during the 24-hour simulated use test when water was not being withdrawn from the water heater.

1.11 *Storage-Type Water Heaters.*

1.11.1 *Electric storage water heater* means a water heater that uses electricity as the energy source, is designed to heat and store water at a thermostatically controlled temperature of less than 180°F (82°C), has a nominal input of 12 kilowatts or less, and has a manufacturer's rated storage capacity of 120 gallons (450 liters) or less.

1.11.2 *Gas Storage Water Heater* means a water heater that uses gas as the energy source, is designed to heat and store water at a thermostatically controlled temperature of less than 180°F (82°C), has a nominal input of 75,000 Btu per hour (79 MJ per hour) or less, and has a manufacturer's rated storage capacity of 100 gallons (380 liters) or less.

1.11.3 *Heat Pump Water Heater* means a water heater that uses electricity as the energy source, is designed to heat and store water at a thermostatically controlled temperature of less than 180°F (82°C), has a maximum current rating of 24 amperes (includes the compressor and all auxiliary equipment such as fans, pumps, and controls, and if on the same circuit, any resistive elements) for an input voltage of 250 volts or less, and, if the tank is supplied, has a manufacturer's rated storage capacity of 120 gallons (450 liters) or less. Resistive elements used to provide supplemental heating may use the same circuit as the compressor if (1) An interlocking mechanism prevents concurrent compressor operation and resistive heating, or (2) concurrent operation does not result in the maximum current rating of 24 amperes being exceeded. Otherwise, separate circuits shall be used by the resistive elements and the heat pump components. A heat pump water heater may be an integral type or an add-on type.

a. Integral heat pump water heater—An air-to-water heat pump integral with an insulated storage tank.

b. Add-on heat pump water heater—An air-to-water heat pump designed for use with a heat pump water heater storage tank.

1.11.4 *Oil Storage Water Heater* means a water heater that uses oil as the energy source, is designed to heat and store water at a thermostatically controlled temperature of less than 180°F (82°C), has a nominal energy input of 105,000 Btu/hr (110 MJ/hr) or less, and has a manufacturer's rated storage capacity of 50 gallons (190 liters) or less.

1.11.5 *Solar Water Heater* means a water heater that is designed to obtain at least half of the annual energy for heating water from the sun.

1.12 *ASHRAE Standard 41.1–86* means the standard published in 1986 by the American Society of Heating, Refrigerating and Air-Conditioning Engineers, Inc. and titled Standard Measurement Guide: Section on Temperature Measurements.

1.13 *ASTM–D–2156–80* means the test standard published in 1980 by the American Society of Testing and Measurements and titled Method for Smoke Density in Flue Gases from Burning Distillate Fuels.

1.14 *Rated Storage Volume* means the water storage capacity of a water heater, in gallons (liters), as specified by the manufacturer.

2. Test Conditions

2.1 *Installation Requirements.* Tests shall be performed with the water heater and instrumentation installed in accordance with Section 4 of this appendix.

2.2 *Ambient Air Temperature.* The ambient air temperature shall be controlled to a value between 65.0°F and 70.0°F (18.3°C and 21.1°C) on a continuous basis. For heat pump water heaters, the dry bulb temperature shall be maintained at 67.5°F ± 1°F (19.7°C ± 0.6°C) and, in addition, the relative humidity shall be maintained between 49 and 51 percent.

2.3 *Supply Water Temperature.* The temperature of the water being supplied to the water heater shall be maintained at 58°F± 2°F (14.4°C±1.1°C) throughout the test.

2.4 *Storage Tank Temperature.* The average temperature of the water within the storage tank shall be set to 135°F±5°F (57.2°C±2.8°C).

2.5 *Supply Water Pressure.* During the test when water is not being withdrawn, the supply pressure shall be maintained between 40 psig (275 kPa) and the maximum allowable pressure specified by the water heater manufacturer.

2.6 *Electrical and/or Fossil Fuel Supply.*

2.6.1 *Electrical.* Maintain the electrical supply voltage to within ±1 percent of the center of the voltage range specified by the water heater and/or heat pump manufacturer.

2.6.2 *Natural Gas.* Maintain the supply pressure in accordance with the manufacturer's specifications. If the supply pressure is not specified, maintain a supply pressure of 7 to 10 inches of water column (1.7 Kpa to 2.5 Kpa). If the water heater is equipped with a gas appliance pressure regulator, the regulator outlet pressure shall be within ±10% of the manufacturer's specified manifold pressure. Use natural gas having a higher heating value of approximately 1,025 Btu per standard cubic foot (38190 KJ per standard cubic meter).

2.6.3 *Propane Gas.* Maintain the supply pressure in accordance with the manufacturer's specifications. If the supply pressure is not specified, maintain a supply pressure of 11 to 13 inches of water column (2.7 kPa to 3.2 kPa). If the water heater is equipped with a gas appliance pressure regulator, the regulator outlet pressure shall be within ±10% of the manufacturer's specified manifold pressure. Use propane gas with a higher heating value of approximately 2,500 Btu per standard cubic foot (93 kJ per standard cubic meter).

2.6.4 *Fuel Oil Supply.* Maintain an uninterrupted supply of fuel oil. Use fuel oil having a heating value of approximately 138,700 Btu per gallon (38,660 kJ per liter).

3. Instrumentation

3.1 *Pressure Measurements.* Pressure measuring instruments shall have an error no greater than the following values:

Item measured	Instrument accuracy	Instrument precision
Gas pressure	± 0.1 inch of water column (± 0.025 kPa)	± 0.05 inch of water column (± 0.012 kPa).
Atmospheric pressure	± 0.1 inch of mercury column (± 0.34 kPa)	± 0.05 inch of mercury column (± 0.17 kPa).
Water pressure	± 1.0 pounds per square inch (± 6.9 kPa)	± 0.50 pounds per square inch (± 3.45 kPa).

3.2 *Temperature Measurement.*

3.2.1 *Measurement.* Temperature measurements shall be made in accordance with the Standard Measurement Guide: Section on Temperature Measurements, ASHRAE Standard 41.1–86.

3.2.2 *Accuracy and Precision.* The accuracy and precision of the instruments, including their associated readout devices, shall be within the limits as follows:

Item measured	Instrument accuracy	Instrument precision
Air dry bulb temperature	± 0.2 °F (± 0.1 °C)	± 0.1 °F (± 0.06 °C).
Air wet bulb temperature	± 0.2 °F (± 0.1 °C)	± 0.1 °F (± 0.06 °C).
Inlet and outlet water temperatures	± 0.2 °F (± 0.1 °C)	± 0.1 °F (± 0.06 °C).
Storage tank temperatures	± 0.5 °F (± 0.3 °C)	± 0.25 °F (± 0.14 °C).

3.2.3 *Scale Division.* In no case shall the smallest scale division of the instrument or instrument system exceed 2 times the specified precision.

3.2.4 *Temperature Difference.* Temperature difference between the entering and leaving water may be measured with any of the following:

a. A thermopile
b. Calibrated resistance thermometers
c. Precision thermometers
d. Calibrated thermistors
e. Calibrated thermocouple
f. Quartz thermometers

3.2.5 *Thermopile Construction.* If a thermopile is used, it shall be made from calibrated thermocouple wire taken from a single spool. Extension wires to the recording device shall also be made from that same spool.

3.2.6 *Time Constant.* The time constant of the instruments used to measure the inlet and outlet water temperatures shall be no greater than 5 seconds.

3.3 *Liquid Flow Measurements.* The accuracy of the liquid flow rate measurement, using the calibration if furnished, shall be equal to or less than ± 1% of the measured value in mass units per unit time.

3.4 *Electric Energy.* The electrical energy used shall be measured with an instrument and associated readout device that are accurate within ±1% of the reading.

3.5 *Fossil Fuels.* The quantity of fuel used by the water heater shall be measured with an instrument and associated readout device that is accurate within ±1% of the reading.

3.6 *Mass Measurements.* For mass measurements greater than or equal to 10 pounds (4.5 kg), a scale that is accurate within ±1.0% of the reading shall be used to make the measurement. For mass measurements less than 10 pounds (4.5 kg), the scale shall provide a measurement that is accurate within ±0.1 pound (±0.045 kg).

3.7 *Heating Value.* The higher heating value of the natural gas, propane, or fuel oil shall be measured with an instrument and associated readout device that is accurate within ±1% of the reading. The heating value of natural gas and propane must be corrected for local temperature and pressure conditions.

3.8 *Time.* The elapsed time measurements shall be measured with an instrument that is accurate within ±0.5 seconds per hour.

4. Installation

4.1 *Water Heater Mounting.* A water heater designed to be free standing shall be installed according to the manufacturer's directions on a ¾ inch (2 cm) thick plywood platform supported by three 2×4 inch (5 cm×10 cm) runners. If the water heater is not approved for installation on combustible flooring, suitable non-combustible material shall be placed between it and the platform. For heat pump water heaters without a storage tank supplied by the manufacturer, connections shall be made with a storage tank as described in section 4.10 and in accordance with manufacturer-published installation instructions. The storage tank and heat pump section shall be placed on platform(s) constructed as previously described. If installation materials are not provided by the heat pump manufacturer, use uninsulated 8 foot (2.4 m) long connecting hoses, having an inside diameter of ⅝ inch (1.6 cm). Wall mounted water heaters shall be installed in accordance with manufacturer-published installation instructions on a simulated wall section made from ¾ inch (2 centimeter) plywood and 2×4 inch (5×10 centimeter) studs. Placement in the test room shall be in an area protected from drafts.

4.2 *Water Supply.* The water supply shall be capable of delivering water at conditions as specified in sections 2.3 and 2.5.

4.3 *Water Inlet and Outlet Configuration.* Inlet and outlet piping connections shall be configured as illustrated in Figures 1, 2, or 3. For water heaters that are 36 inches (91 centimeters) or less in height and intended for installation either beneath, adjacent to, or in conjunction with a counter (commonly referred to as an under-the-counter or table-top model), the inlet and outlet connections shall be configured as illustrated in Figures 4a and 4b. Type ''L'' hard copper tubing, the same size as the connections on the water heater, shall be connected to the tank and extend 24 inches (61 centimeters) in length. If an under-the-counter type water heater is not factory equipped with pipe to extend the field connection point of the water heater lines to outside of the jacket or cabinet, type ''L'' hard copper tubing shall be used to extend the water line horizontally to the exterior of the jacket or cabinet. Unions may be used to facilitate installation and removal of the piping arrangements. A pressure gauge and diaphragm expansion tank shall be installed in the supply water piping at a location upstream of the 24-inch (61 centimeters) cold water inlet pipe. An appropriately rated pressure and temperature relief valve shall be installed on all water heaters at the port specified by the manufacturer. Discharge piping for the relief valve shall be non-metallic. If heat traps and/or piping insulation and/or pressure relief valve insulation are supplied with the water heater, they shall be installed for testing. Clearance shall be provided such that none of the piping contacts other surfaces in the test room.

4.4 *Fuel and/or Electrical Power and Energy Consumption.* Install one or more instruments which measure, as appropriate, the quantity and rate of electrical energy and/or fossil fuel consumption in accordance with Section 3. For heat pump water heaters that use supplemental resistive heating, the electrical energy supplied to the resistive element(s) shall be metered separately from the electrical energy supplied to the entire appliance or to the remaining components (i.e., compressor, fans, pumps, controls, etc.).

4.5 *Internal Storage Tank Temperature Measurements.* Install six temperature measurement sensors inside the water heater tank with a vertical distance of at least 4 inches (10 centimeters) between successive sensors. A temperature sensor shall be positioned at the vertical midpoint of each of the six equal volume nodes within the tank. Nodes designate the equal volumes used to evenly partition the total volume of the tank. As much as is possible, the temperature sensor should be positioned away from any heating elements, anodic protective devices, tank walls, and flue pipe walls. If the tank cannot accommodate six temperature sensors and meet the installation requirements specified above, install the maximum number of sensors which comply with the installation requirements. The temperature sensors shall be installed either through (1) the anodic device opening; (2) the relief valve opening; or (3) the hot water outlet. If

installed through the relief valve opening or the hot water outlet, a tee fitting or outlet piping, as applicable, shall be installed as close as possible to its original location. If the relief valve temperature sensor is relocated, and it no longer extends into the top of the tank, a substitute relief valve that has a sensing element that can reach into the tank shall be installed. If the hot water outlet includes a heat trap, the heat trap shall be installed on top of the tee fitting. Added fittings shall be covered with thermal insulation having an R value between 4 and 8 hr·ft^{2}·°F/Btu (0.7 and 1.4 m^{2}·°C/W).

BILLING CODE 6450–01–P

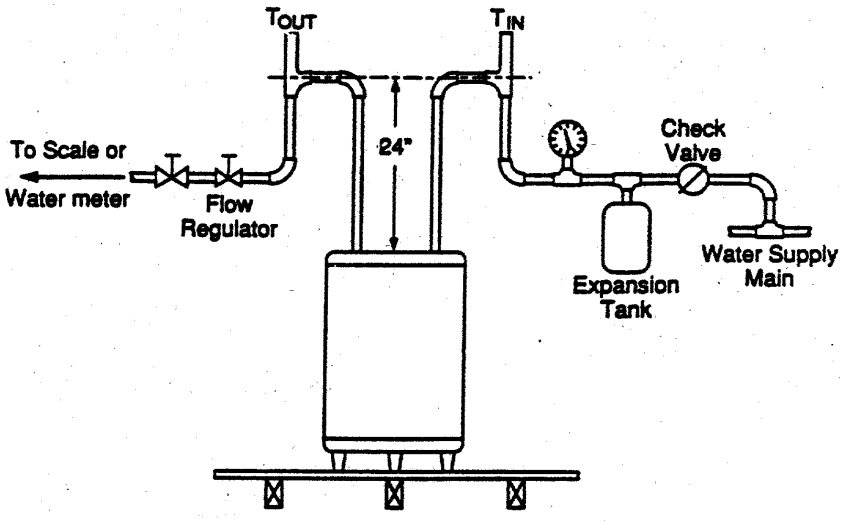

Figure 1

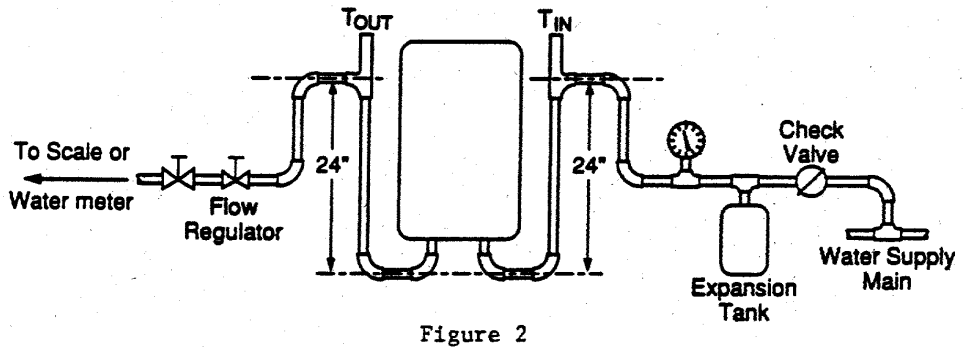

Figure 2

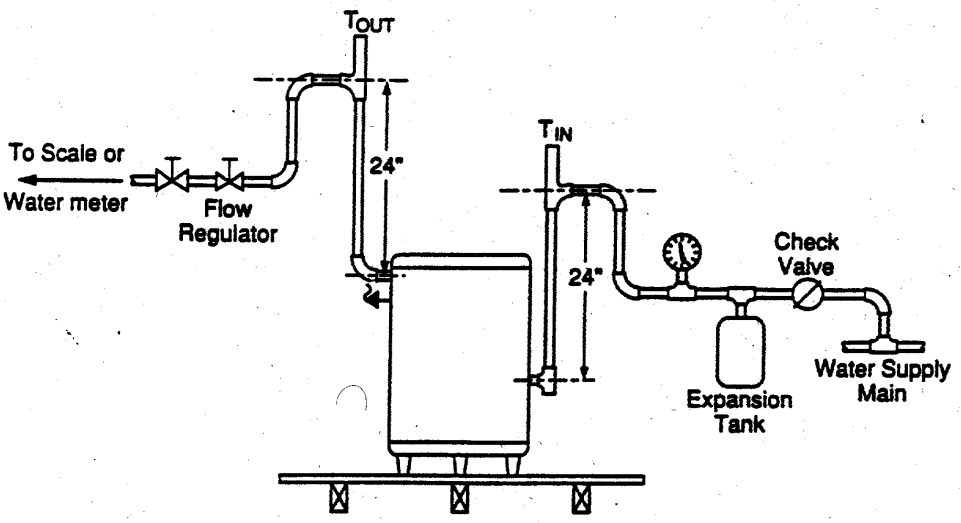

Figure 3

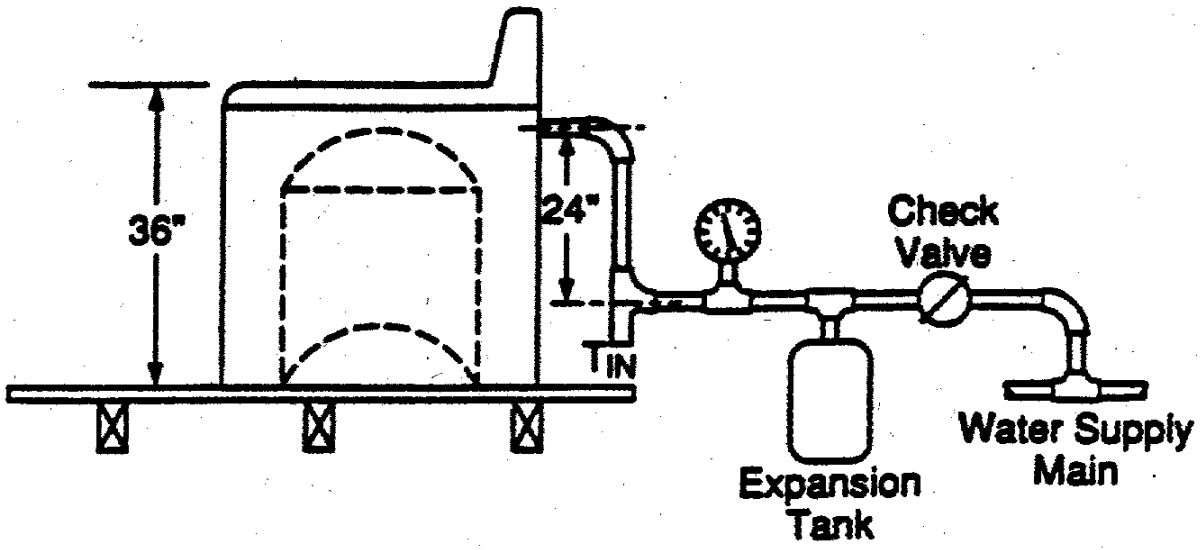

Figure 4a.

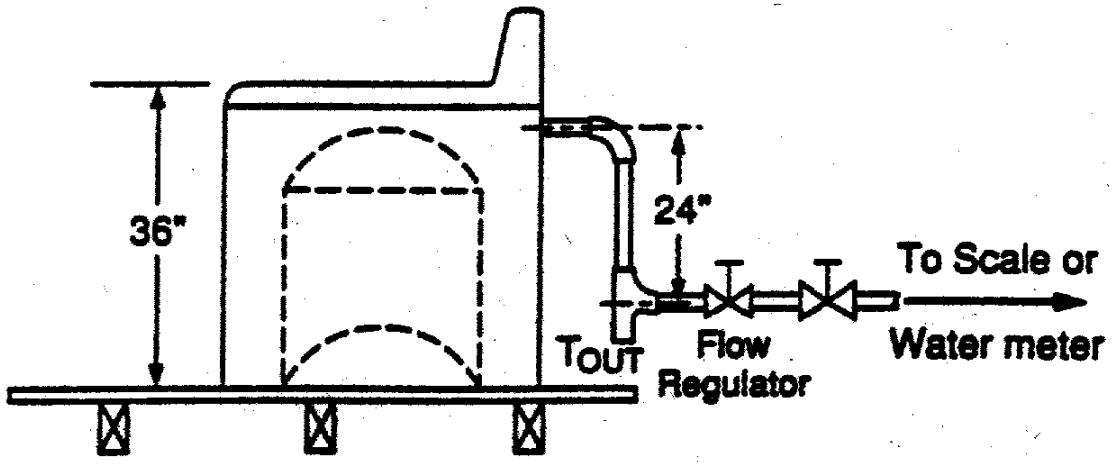

Figure 4b.

BILLING CODE 6450–01–C

4.6 *Ambient Temperature.* The ambient air temperature shall be measured approximately at the vertical mid-point of the water heater and approximately 2 feet (60 centimeters) from the surface of the water heater. The sensor shall be shielded against radiation.

4.7 *Inlet and Outlet Water Temperature Measurements.* Install temperature sensors in the cold-water inlet pipe and hot-water outlet pipe as shown in Figures 1, 2, 3, or 4a and 4b, as applicable.

4.8 *Flow Control.* A flow control valve shall be installed to provide flow as specified in Section 5.

4.9 *Flue Requirements.*

4.9.1 *Gas-Fired Water Heaters.* Establish a natural draft in the following manner. For gas-fired water heaters having a vertically discharging draft hood outlet, a 5-foot (1.5 meter) vertical vent pipe extension having a diameter equal to the largest flue collar size of the draft hood shall be connected to the draft hood outlet. For gas-fired water heaters having a horizontally discharging draft hood outlet, a 90-degree elbow having a diameter equal to the largest flue collar size of the draft hood shall be connected to the draft hood outlet. A 5-foot (1.5 meter) length of vent pipe shall be connected to the elbow and oriented to discharge vertically upward. Direct vent gas-fired water heaters shall be installed with venting equipment specified in the manufacturer's instructions using the minimum vertical and horizontal lengths of vent pipe recommended by the manufacturer.

4.9.2 *Oil-Fired Water Heaters.* Establish a draft at the flue collar as specified in the manufacturer's literature. Establish the draft by using a sufficient length of vent pipe connected to the water heater flue outlet and directed vertically upward. For an oil-fired water heater having a horizontally discharging draft hood outlet, a 90-degree elbow having a diameter equal to the largest flue collar size of the draft hood shall be connected to the draft hood outlet. A length of vent pipe sufficient to establish the draft shall be connected to the elbow fitting and oriented to discharge vertically upward. Direct vent oil-fired water heaters should be installed with venting equipment as specified in the manufacturer's instructions, using the minimum vertical and horizontal lengths of vent pipe recommended by the manufacturer.

4.10 *Heat Pump Water Heater Storage Tank.* The heat pump water heater storage tank to be used for testing a heat pump water heater without a tank supplied by the manufacturer shall have a volume of 47.0 gallons ±1.0 gallon C 180±4 liters with an Energy Factor of 0.87±.01 as determined in accordance with Section 6.1.7 with two 4.5 kW heating elements controlled in such a manner as to prevent both elements from operating simultaneously.

5. Test Procedures

5.1 *Storage-Type Water Heaters, Including Heat Pump Water Heaters.*

5.1.1 *Determination of Storage Tank Volume.* Determine the storage capacity, Vst, of the water heater under test, in gallons (liters), by subtracting the tare weight—measured while the tank is empty—from the gross weight of the storage tank when completely filled with water (with all air eliminated and line pressure applied as described in section 2.5) and dividing the resulting net weight by the density of water. Density shall be evaluated based on the temperature of the stored water.

5.1.2 *Setting the Thermostat for a Thermostatically Operated Water Heater.* Starting with a tank of supply water, initiate normal operation of the water heater. After cutout, determine the mean tank temperature (based on all of the in-tank sensors) every minute until the maximum value is observed. Determine whether this maximum value for the mean tank temperature is within the range of 135°F±5°F (57.2°C±2.8°C). If not, turn off the water heater, adjust the thermostat, and refill the tank with supply water. Then, initiate normal operation of the water heater, and once again determine the maximum mean tank temperature after cut-out. Repeat this sequence until the maximum mean tank temperature after cut-out is within the range of 135°F±5°F (57.2°C±2.8°C).

If an electric water heater has two or more thermostats, the thermostat that controls the upper-most heating element shall be set first to yield a maximum water temperature of 135°F±5°F (57.2°C±2.8°C), as measured by the in-tank sensors that are positioned above the upper-most heating element. The thermostat that controls the heating element positioned next highest in the tank shall then be set to yield a maximum water temperature of 135°F±5°F (57.2°C±2.8°C). This process shall be repeated until the thermostat controlling the lowest element is correctly adjusted. When adjusting the thermostat that controls the lowest element, the maximum mean tank temperature after cut-out, as determined using all the in-tank sensors, shall be within 135°F±5°F (57.2°C±2.8°C). When adjusting all other thermostats, use only the in-tank temperature sensors positioned above the heating element in question to evaluate the maximum water temperature after cut-out.

For heat pump water heaters, which control an auxiliary resistance element, the thermostat shall be set in accordance with the manufacturer's installation instructions.

5.1.3 *Power Input Determination.* For all water heaters except electric types having immersed heating elements, initiate normal operation and determine the power input, P, to the main burners (including pilot light power, if any) after 15 minutes of operation. If the water heater is equipped with a gas appliance pressure regulator, the regulator outlet pressure shall be set within ±10% of that recommended by the manufacturer. For oil-fired water heaters the fuel pump pressure shall be within ±10% of the manufacturer's specified pump pressure. All burners shall be adjusted to achieve an hourly Btu (kJ) rating that is within ±2% of the value specified by the manufacturer. For an oil-fired water heater, adjust the burner to give a CO2 reading recommended by the manufacturer and an hourly Btu (kJ) rating that is within ±2% of that specified by the manufacturer. Smoke in the flue may not exceed No. 1 smoke as measured by the procedure in ASTM–D–2156–80.

5.1.4 *First Hour Rating Test.*

5.1.4.1 *General.* During hot water draws, remove water at a rate of 3.00±0.25 gallons per minute (11.4±0.95 liters per minute) for units with rated storage capacities of 20 gallons (76 liters) or more and 1.0±0.25 gallons per minute (3.8±0.95 liters per minute) for units with rated storage capacities less than 20 gallons (76 liters). Collect the water in a container that is large enough to hold the volume removed during an individual draw and suitable for weighing at the termination of each draw. Alternatively, a water meter may be used to directly measure the water volume(s) withdrawn.

5.1.4.2 *Draw Initiation Criterion.* Begin the first hour rating test by imposing a draw on the storage-type water heater. After completion of this first draw, initiate successive draws based on the following criteria. For gas- and oil-fired water heaters, initiate successive draws when the thermostat acts to reduce the supply of fuel to the main burner. For electric water heaters having a single element or multiple elements that all operate simultaneously, initiate successive draws when the thermostat acts to reduce the electrical input supplied to the element(s). For electric water heaters having two or more elements that do not operate simultaneously, initiate successive draws when the applicable thermostat acts to reduce the electrical input to the element located vertically highest in the storage tank. For heat pump water heaters that do not use supplemental resistive heating, initiate successive draws immediately after the electrical input to the compressor is reduced by the action of the water heater's thermostat. For heat pump water heaters that do use supplemental resistive heating, initiate successive draws immediately after the electrical input to the compressor or the uppermost resistive element is reduced by the action of the applicable water heater thermostat. This draw initiation criterion for heat pump water heaters that use supplemental resistive heating, however, shall only apply when the water located above the thermostat at cut-out is heated to 135°F ±5°F (57.2°C±2.8°C).

5.1.4.3 *Test Sequence.* Establish normal water heater operation. If the water heater is not presently operating, initiate a draw. The draw may be terminated anytime after cut-in occurs. Once cut-out occurs (e.g., all thermostats satisfied), monitor the internal storage tank temperature sensors described in section 4.5 every minute. For each set of measurements, calculate the mean tank temperature. If any of these mean values are outside the range specified in section 2.4, adjust the thermostat(s) as specified in section 5.1.2 and reevaluate the mean tank temperature after all thermostats are again satisfied.

Initiate a draw after a maximum mean tank temperature has been observed following cut-out. Record the time when the draw is initiated and designate it as an elapsed time of zero, ($\tau^* = 0$). The superscript * is used to denote variables pertaining to the first hour rating test. Record the outlet water temperature beginning 15 seconds after the draw is initiated and at 5 second intervals thereafter, until the draw is terminated. Determine the maximum outlet temperature that occurs during this first draw and record

it as $T^*_{max,1}$. For the duration of this first draw and all successive draws, in addition, monitor the inlet temperature to the water heater to assure that the required 58°F±2°F (14.4°C ± 1.1°C) test condition is met. Terminate the hot water draw when the outlet temperature decreases to $T^*_{max,1}$ − 25°F ($T^*_{max,1}$ − 13.9°C). Record this temperature as $T^*_{min,1}$. Following draw termination, determine the average outlet water temperature and the mass or volume removed during this first draw and record them as $T^*_{del,1}$ and M^*_1 or V^*_1, respectively.

Initiate a second and, if applicable, successive draws each time the applicable draw initiation criterion described in section 5.1.4.2 is satisfied. As required for the first draw, record the outlet water temperature beginning 15 seconds after initiating each draw and at 5 second intervals thereafter until the draw is terminated. Determine the maximum outlet temperature that occurs during each draw and record it as $T^*_{max,i}$, where $_i$ refers to the draw number. Terminate each hot water draw when the outlet temperature decreases to $T^*_{max,i}$ − 25°F ($T^*_{max,i}$ − 13.9°C). Record this temperature as $T^*_{min,i}$. Calculate and record the average outlet temperature and the mass or volume removed during each draw ($T^*_{del,i}$ and M^*_i or V^*_i). Continue this sequence of draw and recovery until one hour has elapsed, at which time the electrical power and/or the fuel supplied to the water heater shall be disconnected and/or terminated.

If a draw is occurring at an elapsed time of one hour, continue this draw until the outlet temperature decreases to $T^*_{max,n}$ − 25°F ($T^*_{max,n}$ − 13.9°C), at which time the draw shall be immediately terminated. The subscript $_n$ shall be used to denote quantities associated with the final draw. If a draw is not occurring at an elapsed time of one hour, a final draw shall be imposed at one hour. This draw shall be immediately terminated when the outlet temperature first indicates a value less than or equal to the cut-off temperature used for the previous draw ($T^*_{min,n-1}$). For cases where the outlet temperature is close to $T^*_{min,n-1}$, the final draw shall proceed for a minimum of 30 seconds. If an outlet temperature greater than $T^*_{min,n-1}$ is not measured within 30 seconds, the draw shall be immediately terminated and zero additional credit shall be given towards first hour rating (i.e., $M^*_n = 0$ or $V^*_n = 0$). Once the final draw is terminated, calculate and record the average outlet temperature and the mass or volume removed during the draw ($T^*_{del,n}$ and M^*_n or V^*_n).

5.1.5 *24-Hour Simulated Use Test.* During the simulated use test, a total of 64.3 ±1 gallon (243±4 liters) shall be removed if the rated storage tank volume is 20 gallons (76 liters) or greater. If the rated storage tank volume is less than 20 gallons (76 liters) but greater than or equal to 10 gallons (38 liters), a total of 24±0.5 gallon (91±1.9 liters) shall be removed; and if the rated storage tank volume is less than 10 gallons (38 liters), a total of 9±0.5 gallon (34±1.9 liters) shall be removed. These values are referred to as the daily hot water usage in the following text.

With the water heater turned off, fill the water heater with supply water and apply pressure as described in section 2.5. Turn on the water heater and associated heat pump unit, if present. After the cutout occurs, measure the mean tank temperature using the temperature sensors described in section 4.5 every minute until the maximum mean storage tank temperature is achieved. If this maximum mean temperature is outside the range specified in section 2.4, adjust the thermostat(s) as specified in section 5.1.2 and reevaluate the mean tank temperature after all thermostats are again satisfied. After thermostat adjustments are completed, the water heater may be operated for up to three cycles of drawing until cut-in and then operating until cut-out, prior to the start of the test.

At this time, record the mean tank temperature (T_o), and the electrical and/or fuel measurement readings, as appropriate. Begin the 24-hour simulated use test by withdrawing a volume from the water heater that equals one-sixth of the daily hot water usage. Record the time when this first draw is initiated and assign it as the test elapsed time (τ) of zero. Record the average storage tank and ambient temperature every 15 minutes throughout the 24-hour simulated use test unless a recovery or a draw is occurring. At elapsed time intervals of one, two, three, four, and five hours from $\tau = 0$, initiate additional draws removing an amount of water equivalent to one-sixth of the daily hot water usage with the maximum allowable deviation for any single draw being ±0.5 gallons (±1.9 liters) for units having rated storage capacities of 20 gallons (76 liters) or greater, and ±0.1 gallons (0.4 liters) for units having rated storage capacities less than 20 gallons (76 liters). The quantity of water withdrawn during the sixth draw shall be increased or decreased as necessary such that the total volume of water withdrawn equals: 64.3±1.0 gallons (243.4±3.8 liters) for water heaters having rated storage capacities of 20 gallons (76 liters) or more, 24±0.5 gallons (90.8±1.9 liters) for water heaters having rated storage capacities less than 20 gallons (76 liters) but greater than or equal to 10 gallons (38 liters), and 9.0±0.5 gallons (34.1±1.9 liters) for water heaters having rated storage capacities less than 10 gallons (38 liters).

All draws during the simulated use test shall be made at flow rates of 3.0±0.25 gallons per minute (11.4±0.95 liters per minute) when testing water heaters having rated storage capacities of 20 gallons (76 liters) or more. For water heaters having rated storage capacities less than 20 gallons (76 liters), flow rates of 1.0±0.25 gallons per minute (3.8±0.95 liters per minutes) shall be achieved. Measurements of the inlet and outlet temperatures shall be made beginning 15 seconds after the draw is initiated and at every subsequent 5 second interval throughout the duration of each draw. The arithmetic mean of the hot water discharge temperature and the cold water inlet temperature shall be determined for each draw ($\bar{T}_{del,i}$ and $\bar{T}_{in,i}$). Determine and record the net mass or volume removed (M_i or V_i), as appropriate, after each draw.

At the end of the recovery period following the first draw, record the maximum mean tank temperature observed after cut-out, $\bar{T}_{max,1}$, and the energy consumed by a gas or oil water heater, Q_r. For heat pump water heaters, the total electrical energy consumed by the heat pump (including compressor, fan, controls, pump, etc.) and, if applicable, by the resistive element(s) during the first recovery shall be recorded as Q_r. In addition, the total operating time of the compressor during the first recovery shall be determined and recorded as $\tau_{cmp,1}$. Finally, for heat pump water heaters that use resistive heating during the first recovery, the electrical energy consumed by the resistive element(s) shall be separately metered and recorded, $Q_{res,1}$.

At the end of the recovery period that follows the sixth draw, determine and record the total electrical energy and/or fossil-fuel consumed since the beginning of the test, Q_{su}. In preparation for determining the energy consumed during stand-by, record the reading given on the electrical energy (watt-hour) meter, the gas meter, and/or the scale used to determine oil consumption, as appropriate. Record the maximum value of the mean tank temperature after cutout as T_{su}. Except as noted below, allow the water heater to remain in the standby mode until 24-hours have elapsed from the start of the test, i.e., since $\tau = 0$. Prevent the water heater from beginning a recovery cycle during the last hour of the test by turning off the electric power to the electrical heating elements and heat pump, if present, or by turning down the fuel supply to the main burner at an elapsed time of 23 hours. If a recovery is taking place at an elapsed time of 23 hours, wait until the recovery is complete before reducing the electrical and/or fuel supply to the water heater. At 24 hours, record the mean tank temperature, T_{24}, and the electric and/or fuel instrument readings. Determine the total fossil fuel or electrical energy consumption, as appropriate, for the entire 24-hour simulated use test, Q. Record the time interval between the time at which the maximum mean tank temperature is observed after the sixth draw and the end of the 24-hour test as $\tau_{stby,1}$. Record the time during which water was not being withdrawn from the water heater during the entire 24-hour period as $\tau_{stby,2}$.

5.2 *Instantaneous Water Heaters.*

5.2.1 *Setting the Outlet Discharge Temperature.* Initiate normal operation of the water heater at the full input rating. Monitor the discharge water temperature and set to a value of 135°F±5°F (57.2°C±2.8°C) in accordance with the manufacturer's instructions. If the water heater is not capable of providing this discharge temperature when the flow rate is 3.00±0.25 gallons per minute (11.4±0.95 liters per minute), then adjust the flow rate as necessary to achieve the specified discharge water temperature. Record the corresponding flow rate as V_{max}.

If the instantaneous water heater incorporates a controller that permits continuous burner or electric heating element operation at a reduced input rate, adjust the flow rate as necessary to achieve a discharge water temperature of 135°F±5°F (57.2°C±2.8°C) while maintaining the minimum input rate. Record the corresponding flow rate as V_{min}. If an outlet temperature of 135°±5°F (57.2°C±2.8°C) cannot be achieved at the minimum flow rate

permitted by the instantaneous water heater, record the flow rate as V_{min} and the corresponding outlet temperature as T_{min}.

25.2.2 *Power Input Determination.* Gas-fired and oil-fired instantaneous water heaters shall have the burners adjusted to the maximum firing rate specified by the manufacturer.

5.2.3 *First Hour Rating Test for Instantaneous Water Heaters.* Establish normal water heater operation at the maximum input rate with the discharge water temperature set in accordance with section 5.2.1. During the test, do not interrupt the electrical energy or fossil fuel supplied to the water heater. During the one hour test, either collect the withdrawn water for later measuring the total mass removed, or alternatively, use a water meter to directly measure the water volume removed.

Begin with the water flow rate temporarily discontinued. Record the scale or water meter reading as appropriate. Initiate a draw and record the corresponding time. Record the inlet and outlet water temperatures beginning 15 seconds after the draw is initiated and at every subsequent 5 second interval throughout the duration of the draw. At the end of one hour terminate the draw. Determine the mass of water withdrawn, M_{FHR}, in pounds (kilograms), or the volume of water withdrawn, V_{FHR}, in gallons (liters) with an error no greater than 2 percent.

5.2.4 *24-Hour Simulated Use Test*

5.2.4.1 *Fixed Input Instantaneous Water Heaters.* Establish normal operation with the discharge water temperature and flow rate set to values of 135°F±5°F (57.2°C±2.8°C) and V_{max}, respectively. With no draw occurring, record the reading given by the gas meter, the scale used for determining oil consumption, and/or the electrical energy meter as appropriate. Begin the 24-hour simulated use test by drawing an amount of water out of the water heater equivalent to one-sixth of the daily hot water usage, 64.3 gallons (243 liters). Record the time when this first draw is initiated and designated it as an elapsed time, τ, of 0. At elapsed time intervals of one, two, three, four, and five hours from τ = 0, initiate additional draws removing an amount of water equivalent to one-sixth of 64.3 gallons (243 liters), with the maximum allowable deviation for any single draw being ±0.5 gallons (±2 liters). The quantity of water drawn during the sixth draw shall be increased or decreased as necessary such that the total volume of water withdrawn equals 64.3±1.0 gallons (243±4 liters).

Measurements of the inlet and outlet water temperatures shall be made beginning 15 seconds after the draw is initiated and at every 5 second interval throughout the duration of the draw. The arithmetic mean of the hot water discharge temperature and the cold water inlet temperature shall be determined for each draw. Record the scale used to measure the mass of the withdrawn water or the water meter reading, as appropriate, after each draw. At the end of the recovery period following the first draw, determine and record the fossil fuel or electrical energy consumed, Q_r. Following the sixth draw and subsequent recovery, allow the water heater to remain in the standby mode until exactly 24 hours have elapsed since the start of the test, i.e., since τ = 0. At 24 hours, record the reading given by the gas meter, the scale used for determining oil consumption, and/or the electrical energy meter as appropriate. Determine the fossil fuel or electrical energy consumed during the entire 24-hour simulated use test and designate the quantity as Q.

5.2.4.2 *Variable Input Instantaneous Water Heaters.* If the instantaneous water heater incorporates a controller that permits continuous operation at a reduced input rate, the first three draws shall be conducted using the maximum flow rate, V_{max}, while removing an amount of water equivalent to one-sixth of 64.3 gallons (243 liters), with the maximum allowable deviation for any one of the three draws being ±0.5 gallons (2 liters). The second three draws shall be conducted at V_{min}. If an outlet temperature of 135°F±5°F (57.2°C±2.8°C) could not be achieved at the minimum flow rate permitted by the instantaneous water heater, the last three draws should be lengthened such that the volume removed is:

$$V_{4,5,6} = \frac{64.3\ \text{gal}}{6} \times \left[\frac{77°\,\text{F}}{\left(T_{min} - 58°\,\text{F}\right)} \right]$$

or

$$V_{4,5,6} = \frac{243\text{L}}{6} \times \left[\frac{42.8°\,\text{C}}{\left(T_{min} - 14.4°\,\text{C}\right)} \right]$$

where the maximum allowable variation for any one of the three draws is ± 0.5 gallons (2 liters). The quantity of water withdrawn during the sixth draw shall be increased or decreased as necessary such that the total volume of water withdrawn equals $(32.15+3\times V_{4,5,6})\pm 1.0$ gallons $((121.7+3\times V_{4,5,6})\pm 3.8$ liters).

Measurements of the inlet and outlet water temperatures shall be made beginning 15 seconds after a draw is initiated and at every 5 second interval throughout the duration of the draw. Determine the arithmetic mean of the hot water discharge temperature and the cold water inlet temperature for each draw. Record the scale used to measure the mass of the withdrawn water or the water meter reading, as appropriate, after each draw. At the end of the recovery period following the first draw, determine and record the fossil fuel or electrical energy consumed, $Q_{r,max}$. Likewise, record the reading of the meter or scale used to measure fossil fuel or electrical energy consumption prior to the fourth draw and at the end of the recovery period following the fourth draw, and designate the difference as $Q_{r,min}$. Following the sixth draw and subsequent recovery, allow the water heater to remain in the standby mode until exactly 24 hours have elapsed since the start of the test, i.e., since τ = 0. At 24 hours, record the reading given by the gas meter, the scale used for determining oil consumption, and/or the electrical energy meter, as appropriate. Determine the fossil fuel or electrical energy consumed during the entire 24-hour simulated use test and designate the quantity as Q.

6. Computations

6.1 *Storage Tank and Heat Pump Water Heaters.*

6.1.1 *Storage Tank Capacity.* The storage tank capacity is computed using the following:

$$V_{st} = \frac{\left(W_f - W_t\right)}{\rho}$$

Where:

V_{st}=the storage capacity of the water heater, gal (L).

W_f=the weight of the storage tank when completely filled with water, lb_m (kg).

W_t=the (tare) weight of the storage tank when completely empty, lb_m (kg)

ρ=the density of water use to fill the tank; evaluated based on the temperature of the water, lb_m/gal (kg/L).

6.1.2 *First Hour Rating Computation.* For water heaters where the final draw was initiated at or prior to an elapsed time of one hour, the first hour rating shall be computed using,

$$F_{hr} = \sum_{i=1}^{n} V_i^*$$

Where:

n=the number of draws that are completed during the first hour rating test.

V^*_i=the volume of water removed during the ith draw of the first hour rating test, gal (L).

$$V_i^* = \frac{M_i^*}{\rho}$$

Where:

M^*_i=the mass of water removed during the ith draw of the first hour rating test, lb_m (kg).

ρ=the water density corresponding to the average outlet temperature measured during the ith draw ($\bar{T}^*_{del,i}$), lb_m/gal (kg/L).

For water heaters where a draw was not in progress at the elapsed time of one hour and a final draw was imposed at the elapsed time of one hour, the first hour rating shall be calculated using,

$$F_{hr} = \sum_{i=1}^{n-1} V_i^* + V_n^* \left(\frac{\bar{T}^*_{del,n} - T^*_{min,n-1}}{\bar{T}^*_{del,n-1} - T^*_{min,n-1}} \right)$$

where n and V^*_i are the same quantities as defined above and,

$\bar{T}^*_{del,n-1}$=the average water outlet temperature measured during the (n − 1)th draw of the first hour rating test, °F (°C).

$\bar{T}^*_{del,n}$=the average water outlet temperature measured during the nth (final) draw of the first hour rating test, °F (°C).

$\bar{T}^*_{min,n-1}$=the minimum water outlet temperature measured during the (n − 1)th draw of the first hour rating test, °F (°C).

6.1.3 *Recovery Efficiency.* The recovery efficiency for gas, oil, and heat pump storage type water heaters is computed as:

$$\eta_r = \frac{M_1 C_{\rho 1}\left(\overline{T}_{del,1} - \overline{T}_{in,1}\right)}{Q_r} + \frac{V_{st}\rho_2 C_{\rho 2}\left(\overline{T}_{max,1} - \overline{T}_o\right)}{Q_r}$$

Where:

M_1=total mass removed during the first draw of the 24-hour simulated use test, lb_m (kg).
$=V_1 \times \rho_i$

V_1=total volume removed during the first draw of the 24-hour simulated use test, gal (L).

ρ_1=density of the water as evaluated at the water temperature at the point where the flow volume is measured, lb_m/gal (kg/L).

$C\rho_1$=specific heat of the withdrawn water as evaluated at $(T_{del,1} + T_{in,1})/2$ Btu/lb_m·°F (kJ/kg·K).

$\overline{T}_{del,1}$=average water outlet temperature measured during the first draw of the 24-hour simulated use test,°F (°C).

$\overline{T}_{in,1}$=average water inlet temperature measured during the first draw of the 24-hour simulated use test,°F (°C).

V_{st}=measured volume of the storage tank, as determined in section 6.1.1, gal (L).

ρ_2=density of stored hot water evaluated at $(\overline{T}_{max,1}+\overline{T}_o)/2$, lb_m/gal (kg/L).

$C\rho_2$=specific heat of stored hot water evaluated at $(\overline{T}_{max,1}+\overline{T}_o)/2$, Btu/$lb_m$·°F (kJ/kg·K).

$\overline{T}_{max,1}$=maximum mean tank temperature recorded after cut-out following the first draw of the 24-hour simulated use test, °F (°C).

$\overline{T}_o$=maximum mean tank temperature recorded prior to the first draw of the 24-hour simulated use test, °F (°C).

$Q_{res,1}$=electrical energy used by the supplemental resistive elements of a heat pump water heater during the first recovery of the 24-hour simulated use test, Wh.

$\tau_{cmp,1}$=the total operating time of the compressor of a heat pump water heater during the first recovery of the 24-hour simulated use test, hr.

Q_r=the total energy used by the water heater between cut-out prior to the first draw and cutout following the first draw, including auxiliary energy such as pilot lights, pumps, fans, etc., Btu (MJ). (electrical auxiliary energy shall be converted to thermal energy using the following conversion: 1 Kwh=3412 Btu).

The recovery efficiency for electric water heaters with immersed heating elements is assumed to be 98 percent.

6.1.4 *Hourly Standby Losses.* The hourly standby losses are computed as
Where:

$$Q_{hr} = \frac{Q_{stby} - \dfrac{V_{st}\rho C_\rho\left(\overline{T}_{24} - \overline{T}_{su}\right)}{\eta_r}}{\tau_{stby,1}}$$

Q_{hr}=the hourly standby energy losses of the water heater, Btu/hr (kJ/hr).

Q_{stby}=the total energy consumed by the water heater between the time at which the maximum mean tank temperature is observed after the sixth draw and the end of the 24-hour test period, Btu (kJ).

V_{st}=measured volume of the storage tank, as determined in section 6.1.1, gal (L).

ρ=density of stored hot water as evaluated at, $(T_{24}+T_{su})/2$, lb_m/gal (kg/L).

$C\rho$=specific heat of the stored water as evaluated at $(T_{24}+T_{su})/2$, Btu/lb_m·°F (kJ/kg·°C).

$\overline{T}_{24}$=the mean tank temperature at the end of the 24-hour simulated use test, °F (°C).

$\overline{T}_{su}$=maximum mean tank temperature observed after the sixth draw, °F (°C).

$\tau_{stby,1}$=elapsed time between the time at which the maximum mean tank temperature is observed after the sixth draw and the end of the 24-hour simulated use test, hr.

The standby heat loss coefficient for the tank is computed as:

$$UA = \frac{Q_{hr}}{\overline{T}_{t,stby} - \overline{T}_{a,stby}}$$

Where:

Q_{hr}=defined in section 6.1.4.

$\overline{T}_{t,stby}$=overall average storage tank temperature between the time when the maximum mean tank temperature is observed after the sixth draw and the end of the 24-hour simulated use test, °F (°C).

$\overline{T}_{a,stby}$=overall average ambient temperature between the time when the maximum mean tank temperature is observed after the sixth draw and the end of the 24-hour simulated use test, °F (°C).

UA=standby heat loss coefficient of the storage tank, Btu/hr·°F (kJ/hr·°C).

6.1.5 *Daily Water Heating Energy Consumption.* The daily water heating energy consumption, Q_d is computed as:

$$Q_d = Q - \frac{V_{st}\rho C_\rho\left(\overline{T}_{24} - \overline{T}_o\right)}{\eta_r}$$

Where:

Q=total energy used by the water heater during the 24-hour simulated use test including auxiliary energy such as pilot lights, pumps, fans, etc., Btu (kJ) (Electrical auxiliary energy shall be converted to thermal energy using the following conversion: 1 kWh = 3412 Btu).

V_{st}=measured volume of the storage tank, as determined in section 6.1.1, gal (L).

ρ=density of the stored hot water as evaluated at $(\overline{T}_{24}+\overline{T}_o)/2$, lb_m/gal (kg/L).

$C\rho$=specific heat of the stored water as evaluated at $(\overline{T}_{24}+\overline{T}_o)/2$, Btu/$lb_m$·°F (kJ/kg·°C).

$\overline{T}_{24}$=mean tank temperature at the end of the 24-hour simulated use test, °F (°C).

$\overline{T}_o$=mean tank temperature at the beginning of the 24-hour simulated use test, recorded one minute before the first draw is initiated, °F (°C).

η_r=recovery efficiency of the hot water heater, dimensionless.

6.1.6 *Adjusted Daily Water Heating Energy Consumption.* The adjusted daily water heating energy consumption, Q_{da} takes into account that the temperature difference between the storage tank and surrounding ambient temperature may not be the nominal value of 67.5°F (135°F–67.5°F) or 37.5°C (57.2°C–19.7°C) due to the 10°F (5.6°C) allowable variation in storage tank temperature, 135±5°F (57.2±2.8°C), and the 5°F (2.8°C) allowable variation in surrounding ambient temperature 65°F (18.3°C) to 70°F (21.1°C). The adjusted daily water heating energy consumption is computed as:

$$Q_{da} = Q_d - [(\overline{T}_{stby} - \overline{T}_{a,stby}) - (135\ °F - 67.5\ °F)]UA\tau_{stby,2}$$

$$\text{or}\quad Q_{da} = Q_d - [(\overline{T}_{stby} - \overline{T}_{a,stby}) - (57.2\ °C - 19.7\ °C)]UA\tau_{stby,2}$$

Where:

Q_{da}=the adjusted daily water heating energy consumption, in Btu (kJ).

$\overline{T}_{stby}$=the mean tank temperature during the total standby portion, $T_{stby,2}$, of the 24-hour test, in °F (°C).

$\overline{T}_{a,stby}$=the average ambient temperature during the total standby portion, $T_{stby,2}$, of the 24-hour test, in °F (°C).

UA=the standby heat loss coefficient for the storage tank, in Btu/hr·°F (kJ/hr·°C).

$\tau_{stby,2}$=the number of hours during the 24-hour simulated test when water was not being withdrawn from the water heater.

A modification is also needed to take into account that the temperature difference between the outlet water temperature and supply water temperature may not be equivalent to the nominal value of 77°F (135°F – 58°F) or 42.8°C (57.2°C – 14.4°C). The following equations adjust the experimental data to a nominal 77°F (42.8°C) temperature rise.

The energy used to heat water, Btu/day (kJ/day) may be computed as:

$$Q_{HW} = \sum_{i=1}^{6} \frac{M_i C_{\rho i}\left(\overline{T}_{del,\,i} - \overline{T}_{in,\,i}\right)}{\eta_r}$$

Where:

M_i=the mass withdrawn for the ith draw (i=1 to 6), in lb_m (kg).

$C\rho_i$=the specific heat of water, in Btu/lb_m°F (kJ/kg·°C).

$\bar{T}_{del,i}$=the average water outlet temperature measured during the *i*th draw (i=1 to 6), °F(°C).

$\bar{T}_{in,i}$=the average water inlet temperature measured during the *i*th draw (i=1 to 6), °F(°C).

η_r=as defined in section 6.1.3.

The energy required to heat the same quantity of water over a 77°F (42.8°C) temperature rise, Btu/day (kJ/day), is:

$$Q_{HW,\ 77°F} = \sum_{i=1}^{6} \frac{M_i C_{\rho i}(135°F - 58°F)}{\eta_r}$$

$$\text{or} \quad Q_{HW,\ 42.8°C} = \sum_{i=1}^{6} \frac{M_i C_{\rho i}(57.2°C - 14.4°C)}{\eta_r}$$

The difference between these two values is:

$$Q_{HWD} = Q_{HW,77°F} - Q_{HW}$$

or

$$Q_{HWD} = Q_{HW,42.8°C} - Q_{HW}$$

which must be added to the adjusted daily water heating energy consumption value. Thus, the daily energy consumption value which takes into account that the temperature difference between the storage tank and ambient temperature may not be 67.5°F (37.5°C) and the temperature rise across the storage tank may not be 77°F (42.8°C) is:

$$Q_{dm} = Q_{da} + Q_{HWD}$$

6.1.7 *Energy Factor.* The energy factor, E_f, is computed as:

$$E_f = \sum_{i=1}^{6} \frac{M_i C_{\rho i}(135°F - 58°F)}{Q_{dm}}$$

or

$$E_f = \sum_{i=1}^{6} \frac{M_i C_{\rho i}(57.2°C - 14.4°C)}{Q_{dm}}$$

Where:

Q_{dm}=the modified daily water heating energy consumption as computed in accordance with section 6.1.6, in Btu (kJ).

M_i=as defined in section 6.1.6.

$C\rho_i$=as defined in section 6.1.6.

6.1.8 *Annual Energy Consumption.* The annual energy consumption for storage type and heat pump water heaters is computed as:

$$E_{annual} = 365 \times Q_{dm}$$

Where:

Q_{dm}=the modified daily energy consumption value, Btu/day (kJ/day), and 365 is the number of days in a year.

6.2 *Instantaneous Hot Water Heaters.*

6.2.1 *First Hour Rating Computation.* Compute the first hour rating as:

$$F_{hr} = \frac{M_{FHR}(\bar{T}_{del} - \bar{T}_{in})}{\rho(135°F - 58°F)}$$

$$\text{or} \quad F_{hr} = \frac{M_{FHR}(\bar{T}_{del} - \bar{T}_{in})}{\rho(57.2°C - 14.4°C)}$$

which may be expressed as:

$$F_{hr} = \frac{M_{FHR}(\bar{T}_{del} - \bar{T}_{in})}{\rho(77°F)}$$

$$\text{or } F_{hr} = \frac{M_{FHR}(\bar{T}_{del} - \bar{T}_{in})}{\rho(42.8°C)}$$

Where:

M_{FHR}=the mass removed during the one hour continuous draw, in lb_m (kg).

$\bar{T}_{del}$=the average delivery temperature, in °F (°C).

$\bar{T}_{in}$=the average inlet temperature, in °F (°C).

ρ=the density of water at the average delivery temperature, in lb_m/gal (kg/L).

If a water meter is used in lieu of a scale the first hour rating is computed as:

$$F_{hr} = \frac{V(\bar{T}_{del} - \bar{T}_{in})}{77°F}$$

$$\text{or } F_{hr} = \frac{V(\bar{T}_{del} - \bar{T}_{in})}{42.8°C}$$

Where:

V=the volume of water removed during the one hour continuous draw, in gallons (liters).

$\bar{T}_{del}$=defined in section 6.2.1.

$\bar{T}_{in}$=defined in section 6.2.1.

6.2.2 *Recovery Efficiency*

6.2.2.1 *Fixed Input Instantaneous Water Heaters.* The recovery efficiency is computed as:

$$\eta_r = \frac{M_1 C_{\rho 1}(\bar{T}_{del,1} - \bar{T}_{in,1})}{Q_r}$$

Where:

M_1=the mass withdrawn during the first draw of the 24-hour simulated use test, lb_m (kg).

$C\rho_1$=the specific heat of water at the average temperature $(\bar{T}_{del,1}+\bar{T}_{in,1})/2$, Btu/$lb_m$·°F (kJ/kg·°C).

$\bar{T}_{del,1}$=the average temperature for the first draw, °F (°C).

$\bar{T}_{in,1}$=the average inlet temperature for the first draw, °F (°C).

Q_r=the total energy used by the water heater between cutout prior to the first draw and cut-out following the first draw, including auxiliary energy such as pilot lights, pumps, fans, etc., Btu (kJ).

6.2.2.2. *Variable Input Instantaneous Water Heaters.* For instantaneous water heaters which have a variable firing rate, two recovery efficiency values are computed, one at the maximum input rate and one at the minimum input rate. The recovery efficiency used in subsequent computations is taken as the average of these two values. The maximum recovery efficiency is computed as:

$$\eta_{r,max} = \frac{M_1 C_{\rho 1}(\bar{T}_{del,1} - \bar{T}_{in,1})}{Q_{r,max}}$$

Where:

M_1=defined in section 6.2.2.1.

$C\rho_1$=defined in section 6.2.2.1.

$\bar{T}_{del,1}$=defined in section 6.2.2.1.

$\bar{T}_{in,1}$=defined in section 6.2.2.1.

$Q_{r,max}$=the total energy used by the water heater between cut-out prior to the first draw and cut-out following the first draw, including auxiliary energy such as pilot lights, Btu (kJ).

The minimum recovery efficiency is computed as:

$$\eta_{r,min} = \frac{M_4 C_{\rho 4}(\bar{T}_{del,4} - \bar{T}_{in,4})}{Q_{r,min}}$$

Where:

M_4=the mass withdrawn during the fourth draw, in lb_m (kg).

$C\rho_4$=the specific heat of water, in Btu/lb_m·°F (kJ/kg·°C).

$\bar{T}_{del,4}$=the average delivery temperature for the fourth draw, in °F (°C).

$\bar{T}_{in,4}$=the average inlet temperature for the fourth draw, in °F (°C).

$Q_{r,min}$=the total energy consumed immediately prior to the fourth draw and cut-out following the fourth draw, including auxiliary energy such as pilot lights, in Btu (kJ).

The recovery efficiency is computed as:

$$\eta_r = \frac{\eta_{r,max} + \eta_{r,min}}{2}$$

Where:

$\eta_{r,max}$=defined in section 6.2.2.2.

$\eta_{r,min}$=defined in section 6.2.2.2.

6.2.3 *Daily Water Heating Energy Consumption.* The daily water heating energy consumption, Q_d is computed as:

Q_d=Q

Where:

Q=the energy used by the flow actuated water heater during the 24-hour simulated use test.

A modification is needed to take into account that the temperature difference between the outlet water temperature and supply water temperature may not be equivalent to the nominal value of 77°F (135°F − 58°F) or 42.8°C (57.2°C − 14.4°C). The following equations adjust the experimental data to a nominal 77°F (42.8°C) temperature rise.

The energy used to heat water may be computed as:

$$Q_{HW} = \sum_{i=1}^{6} \frac{M_i C_{\rho i}(\bar{T}_{del,i} - \bar{T}_{in,i})}{\eta_r}$$

Where:

M_i=the mass withdrawn during the ith draw, in lb_m (kg).
$C\rho_i$=the specific heat of water of the ith draw, in Btu/lb_m°F(kJ/kg·°C).
$\bar{T}_{del,i}$=the average delivery temperature of the ith draw, in °F(°C).
$\bar{T}_{in,i}$=the average inlet temperature of the ith draw, in °F(°C).
η_r=defined in section 6.2.2.2.

The energy required to heat the same quantity of water over a 77°F (42.8°C) temperature rise is:

$$Q_{HW,77°F} = \sum_{i=1}^{6} \frac{M_i C_{\rho i}(135°F - 58°F)}{\eta_r}$$

$$\text{or } Q_{HW,42.8°C} = \sum_{i=1}^{6} \frac{M_i C_{\rho i}(57.2°C - 14.4°C)}{\eta_r}$$

Where:
M_i=defined above.
$C\rho_i$=defined above.
η_r=defined in above.

The difference between these two values is:

$$Q_{HWD} = Q_{HW,77°F} - Q_{HW}$$

$$\text{or } Q_{HWD} = Q_{HW,42.8°C} - Q_{HW}$$

which must be added to the daily water heating energy consumption value. Thus, the daily energy consumption value which takes into account that the temperature rise across the storage tank may not be 77°F (42.8°C) is:

$$Q_{dm} = Q_d + Q_{HWD}$$

6.2.4 *Energy Factor.* The energy factor, E_f, is computed as:

$$E_f = \sum_{i=1}^{6} \frac{M_i C_{\rho i}(135°F - 58°F)}{Q_{dm}}$$

$$\text{or } E_f = \sum_{i=1}^{6} \frac{M_i C_{\rho i}(57.2°C - 14.4°C)}{Q_{dm}}$$

Where:
Q_{dm}=the daily water heating energy consumption as computed in accordance with Section 6.2.3, in Btu (kJ).
M_i=the mass associated with the ith draw, in lb_m (kg).
$C\rho_i$=the specific heat of water computed at a temperature of (58°F+135°F)/2, Btu/lb_m·°F [(14.4°C+57.2°C)/2, kJ/kg·°C].
$\bar{T}_{del,i}$=the average delivery temperature of the ith draw, in °F(°C).
$\bar{T}_{in,i}$=the average inlet temperature of the ith draw, in °F(°C).

6.2.5 *Annual Energy Consumption.* The annual energy consumption for instantaneous type water heaters is computed as:

$$E_{annual} = 365 \times Q_{dm}$$

Where:
Q_{dm}=the modified daily energy consumption, in Btu/day (kJ/day) and 365 is the number of days within a year.

7. Ratings for Untested Models

In order to relieve the test burden to manufacturers who offer water heaters which differ only in fuel type or power input, ratings for untested models may be established in accordance with the following procedures. In lieu of the following procedures a manufacturer may elect to test the unit for which a rating is sought.

7.1 *Gas Water Heaters.* Ratings obtained for gas water heaters using natural gas can be used for an identical water heater which utilizes propane gas if the input ratings are within 10 percent.

7.2 *Electric Water Heaters*

7.2.1 *First Hour Rating.* If an electric storage type water heater is available with more than one input rating, the manufacturer shall designate the standard input rating and the water heater need only be tested with heating elements at the designated standard input ratings. The first hour ratings for units having power input rating less than the designated standard input rating shall be assigned a first hour rating equivalent to the first draw of the first hour rating for the electric water heater with the standard input rating. For units having power inputs greater than the designated standard input rating, the first hour rating shall be equivalent to that measured for the water heater with the standard input rating.

7.2.2 *Energy Factor.* The energy factor for identical electric storage type water heaters, with the exception of heating element wattage, may use the energy factor obtained during testing of the water heater with the designated standard input rating.

5. Appendix I to subpart B of part 430 is revised to read as follows:

Appendix I to Subpart B of Part 430—Uniform Test Method for Measuring the Energy Consumption of Conventional Ranges, Conventional Cooking Tops, Conventional Ovens, and Microwave Ovens

1. Definitions

1.1 *Built-in* means the product is supported by surrounding cabinetry, walls, or other similar structures.

1.2 *Drop-in* means the product is supported by horizontal surface cabinetry.

1.3 *Forced convection* means a mode of conventional oven operation in which a fan is used to circulate the heated air within the oven compartment during cooking.

1.4 *Freestanding* means the product is not supported by surrounding cabinetry, walls, or other similar structures.

1.5 *IEC 705* refers to the test standard published by the International Electrotechnical Commission, entitled ''Method for Measuring the Performance of Microwaves Ovens for Household and Similar Purposes,'' Publication 705, Amendment 2–1993.

1.6 *Normal nonoperating temperature* means the temperature of all areas of an appliance to be tested that is within 5 degrees (2.8°C) of the temperature that the identical areas of the same basic model of the appliance would attain if it remained in the test room for 24 hours while not operating with all oven doors closed and with any gas pilot lights on and adjusted in accordance with manufacturer's instructions.

1.7 *Primary energy consumption* means either the electrical energy consumption of a conventional electric oven or the gas energy consumption of a conventional gas oven.

1.8 *Secondary energy consumption* means any electrical energy consumption, other than clock energy consumption, of a conventional gas oven.

1.9 *Standard cubic foot (L) of gas* means that quantity of gas that occupies 1 cubic foot (L) when saturated with water vapor at a temperature of 60°F (15.6°C) and a pressure of 30 inches of mercury (101.6 kPa) (density of mercury equals 13.595 grams per cubic centimeter).

1.10 *Thermocouple* means a device consisting of two dissimilar metals which are joined together and, with their associated wires, are used to measure temperature by means of electromotive force.

2. Test Conditions

2.1 *Installation.* A free standing appliance shall be installed with the back directly against, or as near as possible to, a vertical wall which extends at least 1 foot above and on either side of the appliance. There shall be no side walls. A drop-in, built-in or wall-mounted appliance shall be installed in an enclosure in accordance with the manufacturer's instructions. These appliances are to be completely assembled with all handles, knobs, guards and the like mounted in place. Any electric resistance heaters, gas burners, baking racks, and baffles shall be in place in accordance with the manufacturer's instructions; however, broiler pans are to be removed from the oven's baking compartment.

Disconnect any electrical clock which uses energy continuously, except for the microwave oven. Do not disconnect or modify the circuit to any other electrical devices or features, except as indicated in section 2.1.3.

2.1.1 *Conventional electric ranges, ovens, and cooking tops.* These products shall be connected to an electrical supply circuit with voltage as specified in section 2.2.1 with a watt-hour meter installed in the circuit. The watt-hour meter shall be as described in section 2.9.1.1.

2.1.2 *Conventional gas ranges, ovens, and cooking tops.* These products shall be connected to a gas supply line with a gas meter installed between the supply line and the appliance being tested, according to manufacturer's specifications. The gas meter shall be as described in section 2.9.2. Conventional gas ranges, ovens and cooking tops with electrical ignition devices or other electrical components shall be connected to an electrical supply circuit of nameplate voltage with a watt-hour meter installed in the circuit. The watt-hour meter shall be as described in section 2.9.1.1.

2.1.3 *Microwave ovens.* Install the microwave oven in accordance with the manufacturer's instructions and connect to

an electrical supply circuit with voltage as specified in section 2.2.1. A watt meter and watt-hour meter shall be installed in the circuit and shall be as described in section 2.9.1.1. and 2.9.1.2. If trial runs are needed to set the ''on'' time for the test, the test measurements are to be separated according to section 4, Paragraph 12.6 of IEC 705.

2.2 *Energy supply.*

2.2.1 *Electrical supply.* Maintain the electrical supply to the conventional range, conventional cooking top, and conventional oven being tested at 240/120 volts except that basic models rated only at 208/120 volts shall be tested at that rating. Maintain the voltage within 2 percent of the above specified voltages, except for the microwave oven testing. Maintain the electrical supply to a microwave oven at 120 volts ± 1 volt and at 60 hertz.

2.2.2 *Gas supply.*

2.2.2.1 *Gas burner adjustments.* Conventional gas ranges, ovens, and cooking tops shall be tested with all of the gas burners adjusted in accordance with the installation or operation instructions provided by the manufacturer. In every case, the burner must be adjusted with sufficient air flow to prevent a yellow flame or a flame with yellow tips.

2.2.2.2 *Natural gas.* For testing convertible cooking appliances or appliances which are designed to operate using only natural gas, maintain the natural gas pressure immediately ahead of all controls of the unit under test at 7 to 10 inches of water column (1743.6 to 2490.8 Pa). The regulator outlet pressure shall equal the manufacturer's recommendation. The natural gas supplied should have a heating value of approximately 1,025 Btu's per standard cubic foot (38.2 kJ/L). The actual gross heating value, Hn, in Btu's per standard cubic foot (kJ/L), for the natural gas to be used in the test shall be obtained either from measurements made by the manufacturer conducting the test using equipment that meet the requirements described in section 2.9.4 or by the use of bottled natural gas whose gross heating value is certified to be at least as accurate a value that meet the requirements in section 2.9.4.

2.2.2.3 *Propane.* For testing convertible cooking appliances with propane or for testing appliances which are designed to operate using only LP-gas, maintain the propane pressure immediately ahead of all controls of the unit under test at 11 to 13 inches of water column (2740 to 3238 Pa). The regulator outlet pressure shall equal the manufacturer's recommendation. The propane supplied should have a heating value of approximately 2,500 Btu's per standard cubic foot (93.15 kJ/L). The actual gross heating value, H_p, in Btu's per standard cubic foot (kJ/L), for the propane to be used in the test shall be obtained either from measurements made by the manufacturer conducting the test using equipment that meet the requirements described in section 2.9.4 or by the use of bottled propane whose gross heating value is certified to be at least as accurate a value that meet the requirements described in section 2.9.4.

2.2.2.4 *Test gas.* A basic model of a convertible cooking appliance shall be tested with natural gas, but may also be tested with propane. Any basic model of a conventional range, conventional cooking top, or conventional oven which is designed to operate using only natural gas as the energy source must be tested with natural gas. Any basic model of a conventional range, conventional cooking top, or conventional oven which is designed to operate using only LP gas as the gas energy source must be tested with propane gas.

2.3 *Air circulation.* Maintain air circulation in the room sufficient to secure a reasonably uniform temperature distribution, but do not cause a direct draft on the unit under test.

2.4 *Setting the conventional oven thermostat.*

2.4.1 *Conventional electric oven.* Install a thermocouple approximately in the center of the usable baking space. Provide a temperature indicator system for measuring the oven's temperature with an accuracy as indicated in section 2.9.3.2. If the oven thermostat does not cycle on and off, adjust or determine the conventional electric oven thermostat setting to provide an average internal temperature which is 325°±5°F (162.8°±2.8°C) higher than the room ambient air temperature. If the oven thermostat operates by cycling on and off, adjust or determine the conventional electric oven thermostat setting to provide an average internal temperature which is 325°±5°F (162.8°±2.8°C) higher than the room ambient air temperature. This shall be done by measuring the maximum and minimum temperatures in any three consecutive cut-off/cut-on actions of the electric resistance heaters, excluding the initial cut-off/cut-on action, by the thermostat after the temperature rise of 325°±5°F (162.8°±2.8°C) has been attained by the conventional electric oven. Remove the thermocouple after the thermostat has been set.

2.4.2 *Conventional gas oven.* Install five parallel-connected weighted thermocouples, one located at the center of the conventional gas oven's usable baking space and the other four equally spaced between the center and the corners of the conventional gas oven on the diagonals of a horizontal plane through the center of the conventional gas oven. Each weighted thermocouple shall be constructed of a copper disc that is 1-inch (25.4 mm) in diameter and ⅛-inch (3.2 mm) thick. The two thermocouple wires shall be located in two holes in the disc spaced ½-inch (12.7 mm) apart, with each hole being located ¼-inch (6.4 mm) from the center of the disc. Both thermocouple wires shall be silver-soldered to the copper disc. Provide a temperature indicator system for measuring the oven's temperature with an accuracy as indicated in section 2.9.3.2. If the oven thermostat does not cycle on or off, adjust or determine the conventional gas oven thermostat setting to provide an average internal temperature which is 325°±5°F (162.8°±2.8°C) higher than the room ambient air temperature. If the oven thermostat operates by cycling on and off, adjust or determine the conventional gas oven thermostat setting to provide an average internal temperature which is 325°±5°F (162.8±2.8°C) higher than the room ambient air temperature. This shall be done by measuring the maximum and minimum temperatures in any three consecutive cut-off/cut-on actions of the gas burners, excluding the initial cut-off/cut-on action, by the thermostat after the temperature rise of 325°±5°F (162.8°±2.8°C) has been attained by the conventional gas oven. Remove the thermocouple after the thermostat has been set.

2.5 *Ambient room air temperature.* During the test, maintain an ambient room air temperature, T_R, of 77°±9°F (25°±5°C) for conventional ovens and cooking tops, or as indicated in section 4, Paragraph 12.4 of IEC 705 for microwave ovens as measured at least 5 feet (1.5 m) and not more than 8 feet (2.4 m) from the nearest surface of the unit under test and approximately 3 feet (.9 m) above the floor. The temperature shall be measured with a thermometer or temperature indicating system with an accuracy as indicated in section 2.9.3.1.

2.6 *Normal nonoperating temperature.* All areas of the appliance to be tested shall attain the normal nonoperating temperature, as defined in section 1.6, before any testing begins. The equipment for measuring the applicable normal nonoperating temperature shall be as described in sections 2.9.3.1, 2.9.3.2, 2.9.3.4, and 2.9.3.5, as applicable.

2.7 *Test blocks for conventional oven and cooking top.* The test blocks shall be made of aluminum alloy No. 6061, with a specific heat of 0.23 Btu/lb-°F (0.96 kJ/[kg°C]) and with any temper that will give a coefficient of thermal conductivity of 2.6 to 2.8 BTU-in/in-ft ^{2}-°F (154.8 to 171.5 W/[m°C]). Each block shall have a hole at its top. The hole shall be 0.08 inch (2.03 mm) in diameter and 0.80 inch (20.3 mm) deep. The manufacturer conducting the test may provide other means which will ensure that the thermocouple junction is installed at this same position and depth.

The bottom of each block shall be flat to within 0.002 inch (0.051 mm) TIR (total indicator reading). Determine the actual weight of each test block with a scale with an accuracy as indicated in section 2.9.5.

2.7.1 *Conventional oven test block.* The test block for the conventional oven, W_1, shall be 6.25±0.05 inch (158.8±1.3 mm) in diameter, approximately 2.8 inches (71 mm) high and shall weigh 8.5±0.1 lbs (3.86±0.05 kg). The block shall be finished with an anodic black coating which has a minimum thickness of 0.001 inch (0.025 mm) or with a finish having the equivalent absorptivity.

2.7.2 *Small test block for conventional cooking top.* The small test block, W_2, shall be 6.25±0.05 inches (158.8±1.3 mm) in diameter, approximately 2.8 inches (71 mm) high and shall weigh 8.5±0.1lbs (3.86±0.05 kg).

2.7.3 *Large test block for conventional cooking top.* The large test block for the conventional cooking top, W_3, shall be 9±0.05 inches (228.6±1.3 mm) in diameter, approximately 3.0 inches (76 mm) high and shall weigh 19±0.1 lbs (8.62±0.05 kg).

2.7.4 *Thermocouple installation.* Install the thermocouple such that the thermocouple junction (where the thermocouple contacts the test block) is at the bottom of the hole provided in the test block and that the thermocouple junction makes good thermal contact with the aluminum block. If the test

blocks are to be water cooled between tests the thermocouple hole should be sealed, or other steps taken, to insure that the thermocouple hole is completely dry at the start of the next test. Provide a temperature indicator system for measuring the test block temperature with an accuracy as indicated in section 2.9.3.3.

2.7.5 *Initial test block temperature.* Maintain the initial temperature of the test blocks, T_I, within ±4°F (±2.2°C) of the ambient room air temperature as specified in section 2.5. If the test block has been cooled (or heated) to bring it to room temperature, allow the block to stabilize for at least 2 minutes after removal from the cooling (or heating) source, before measuring its initial temperature.

2.8 *Microwave oven test load.*

2.8.1 *Test container.* The test container shall be as specified in section 4, Paragraph 12.2 of IEC 705.

2.8.2 *Test water load.* The test water load shall be as specified in section 4, Paragraph 12.1 of IEC 705.

2.8.2.1 *Test water load and test container temperature.* Before the start of the test, the oven and the test container shall be at ambient temperature as specified in section 4, Paragraph 12.4 of IEC 705. The test water load shall be contained in a chiller (not the test container) and maintained at 18°±1.8°F (10°±1°C) below the ambient room temperature.

2.9 *Instrumentation.* Perform all test measurements using the following instruments, as appropriate:

2.9.1 *Electrical Measurements.*

2.9.1.1 *Watt-hour meter.* The watt-hour meter for measuring the electrical energy consumption of conventional ovens and cooking tops shall have a resolution of at least 1 watt-hour (3.6 kJ) and a maximum error no greater than 1.5 percent of the measured value. The watt-hour meter for measuring the energy consumption of microwave ovens shall have a resolution of at least 0.1 watt-hour (.36 kJ) and a maximum error no greater than 1.5 percent of the measured value.

2.9.1.2 *Wattmeter.* The wattmeter used to measure the conventional oven, conventional range, microwave/conventional range clock power or the power input of the microwave shall have a resolution of at least 0.2 watt (0.2 J/s) and a maximum error no greater than 5 percent of the measured value.

2.9.2 *Gas Measurements.*

2.9.2.1 *Positive displacement meters.* The gas meter to be used for measuring the gas consumed by the gas burners of the oven or cooking top shall have a resolution of at least 0.01 cubic foot (0.28 L) and a maximum error no greater than 1 percent of the measured value. If a positive displacement gas meter is used for measuring the gas consumed by the pilot lights, it shall have a resolution of at least 0.01 cubic foot (0.28 L) and have a maximum error no greater than 2 percent of the measured value.

2.9.2.2 *Flow meter.* If a gas flow meter is used for measuring the gas consumed by the pilot lights, it shall be calibrated to have a maximum error no greater than 1.5 percent of the measured value and a resolution of at least 1 percent of the measured value.

2.9.3 *Temperature measurement equipment.*

2.9.3.1 *Room temperature indicating system.* The room temperature indicating system shall be as specified in section 4, Paragraph 12.3 of IEC 705.

2.9.3.2 *Temperature indicator system for measuring conventional oven temperature.* The equipment for measuring the conventional oven temperature shall have an error no greater than ±4°F (±2.2°C) over the range of 65° to 500°F (18°C to 260°C).

2.9.3.3 *Temperature indicator system for measuring test block temperature.* The system shall have an error no greater than ±2°F (±1.1°C) when measuring specific temperatures over the range of 65° to 330°F (18.3°C to 165.6°C). It shall also have an error no greater than ±2°F (±1.1°C) when measuring any temperature difference up to 240°F (115.6°C) within the above range.

2.9.3.4 *Test load temperatures.* The thermometer or other temperature measuring instrument used to measure the test water load temperature shall be as specified in section 4, Paragraph 12.3 of IEC 705. Use only one thermometer or other temperature measuring device throughout the entire test procedure.

2.9.3.5 *Temperature indicator system for measuring surface temperatures.* The temperatures of an external surface of an appliance shall be measured by means of a thermocouple in firm contact with the surface. The temperature indicating system shall have an error no greater than ±.45°F (±0.25°C) over the range 65° to 90°F (18°C to 32°C).

2.9.4 *Heating Value.* The heating value of the natural gas or propane shall be measured with an instrument and associated readout device that has a maximum error no greater than .5% of the measured value and a resolution of .2% or less of the full scale reading of the indicator instrument. The heating value of natural gas or propane must be corrected for local temperature and pressure conditions.

2.9.5 *Scale.* The scale used for weighing the test blocks shall have a maximum error no greater than 1 ounce (28.4 g). The scale used for weighing the microwave oven test water load shall be as specified in section four, paragraph 12.3 of IEC 705.

3. Test Methods and Measurements

3.1 *Test methods.*

3.1.1 *Conventional oven.* Perform a test by establishing the testing conditions set forth in section 2, ''TEST CONDITIONS,'' of this appendix, and adjust any pilot lights of a conventional gas oven in accordance with the manufacturer's instructions and turn off the gas flow to the conventional cooking top, if so equipped.

Before beginning the test, the conventional oven shall be at its normal nonoperating temperature as defined in section 1.6 and described in section 2.6. Set the conventional oven test block W1 approximately in the center of the usable baking space. If there is a selector switch for selecting the mode of operation of the oven, set it for normal baking. If an oven permits baking by either forced convection by using a fan, or without forced convection, the oven is to be tested in each of those two modes. If the oven thermostat does not cycle on and off, adjust or determine the conventional electric oven thermostat setting to provide an average internal temperature which is 325°±5°F (162.8°±2.8°C) air temperature. If the oven thermostat operates by cycling on and off, adjust or determine the conventional electric oven thermostat setting to provide an average internal temperature which is 325°±5°F (162.8°±2.8°C) higher than the room ambient air temperature. The oven shall remain on for at least one complete thermostat ''cut-off/cut-on'' of the electrical resistance heaters or gas burners after the test block temperature has increased 234°F (112.2°C) above its initial temperature.

3.1.1.1 *Self-cleaning operation of a conventional oven.* Establish the test conditions set forth in section 2, ''TEST CONDITIONS,'' of this Appendix. Adjust any pilot lights of a conventional gas oven in accordance with the manufacturer's instructions and turn off the gas flow to the conventional cooking top. The temperature of the conventional oven shall be its normal nonoperating temperature as defined in section 1.6 and described in section 2.6. Then set the conventional oven's self-cleaning process in accordance with the manufacturer's instructions. If the self-cleaning process is adjustable, use the average time recommended by the manufacturer for a moderately soiled oven.

3.1.1.2 *Continuously burning pilot lights of a conventional gas oven.* Establish the test conditions set forth in section 2, ''TEST CONDITIONS,'' of this appendix. Adjust any pilot lights of a conventional gas oven in accordance with the manufacturer's instructions and turn off the gas flow to the conventional cooking top. If a positive displacement gas meter is used the, test duration shall be sufficient to measure a gas consumption which is at least 200 times the resolution of the gas meter.

3.1.2 *Conventional cooking top.* Establish the test conditions set forth in section 2, ''TEST CONDITIONS,'' of this appendix. Adjust any pilot lights of a conventional gas cooking top in accordance with the manufacturer's instructions and turn off the gas flow to the conventional oven(s), if so equipped. The temperature of the conventional cooking top shall be its normal nonoperating temperature as defined in section 1.6 and described in section 2.6. Set the test block in the center of the surface unit under test. The small test block, W_2, shall be used on electric surface units of 7 inches (178 mm) or less in diameter. The large test block, W_3, shall be used on electric surface units over 7 inches (177.8 mm) in diameter and on all gas surface units. Turn on the surface unit under test and set its energy input rate to the maximum setting (100 percent). When the test block reaches 144°F (62.2°C) above its initial test block temperature, immediately reduce the energy input rate to 25±5 percent of the maximum energy input rate. After 15±0.1 minutes at the reduced energy setting, turn off the surface unit under test.

3.1.2.1 *Continuously burning pilot lights of a conventional gas cooking top.* Establish the test conditions set forth in section 2, ''TEST CONDITIONS,'' of this appendix.

Adjust any pilot lights of a conventional gas cooking top in accordance with the manufacturer's instructions and turn off the gas flow to the conventional oven(s). If a positive displacement gas meter is used, the test duration shall be sufficient to measure a gas consumption which is at least 200 times the resolution of the gas meter.

3.1.3 *Microwave oven.*

3.1.3.1 *Microwave oven test energy or power output.* Establish the testing conditions set forth in section 2, ''TEST CONDITIONS,'' of this appendix. Follow the test procedure as specified in section 4, Paragraph 12.4 of IEC 705.

3.2 *Test measurements.*

3.2.1 *Conventional oven test energy consumption.* If the oven thermostat controls the oven temperature without cycling on and off, measure the energy consumed, E_O, when the temperature of the block reaches T_O (T_O is 234°F (112.2°C) above the initial block temperature, T_I). If the oven thermostat operates by cycling on and off, make the following series of measurements: Measure the block temperature, T_A, and the energy consumed, E_A, at the end of the last ''ON'' period of the conventional oven before the block reaches T_O. Measure the block temperature, T_B, and the energy consumed, E_B, at the beginning of the next ''ON'' period. Measure the block temperature, T_C, and the energy consumed, E_C, at the end of that ''ON'' period. Measure the block temperature, T_D, and the energy consumed, E_D, at the beginning of the following ''ON'' period. Energy measurements for E_O, E_A, E_B, E_C and E_D should be expressed in watt-hours for conventional electric ovens or standard cubic feet (L) of gas for conventional gas ovens. For a gas oven, measure in watt-hours any electrical energy, E_{IO}, consumed by an ignition device or other electrical components required for the operation of a conventional gas oven while heating the test block to T_O.

3.2.1.1 *Conventional oven average test energy consumption.* If the conventional oven permits baking by either forced convection or without forced convection and the oven thermostat does not cycle on and off, measure the energy consumed with the forced convection mode, $(E_O)_1$, and without the forced convection mode, $(E_O)_2$, when the temperature of the block reaches T_O (T_O is 234°F (112.2°C) above the initial block temperature, T_I). If the conventional oven permits baking by either forced convection or without forced convection and the oven thermostat operates by cycling on and off, make the following series of measurements with and without the forced convection mode: Measure the block temperature, T_A, and the energy consumed, E_A, at the end of the last ''ON'' period of the conventional oven before the block reaches T_O. Measure the block temperature, T_B, and the energy consumed, E_B, at the beginning of the next ''ON'' period. Measure the block temperature, T_C, and the energy consumed, E_C, at the end of that ''ON'' period. Measure the block temperature, T_D, and the energy consumed, E_D, at the beginning of the following ''ON'' period. Energy measurements for E_O, E_A, E_B, E_C and E_D should be expressed in watt-hours for conventional electric ovens or standard cubic feet (L) of gas for conventional gas ovens. For a gas oven that can be operated with or without forced convection, measure in watt-hours any electrical energy consumed by an ignition device or other electrical components required for the operation of a conventional gas oven while heating the test block to T_O using the forced convection mode, $(E_{IO})_1$, and without using the forced convection mode, $(E_{IO})_2$.

3.2.1.2 *Energy consumption of self-cleaning operation.* Measure the energy consumption, E_S, in watt-hours of electricity or in standard cubic feet (L) of gas consumed during the self-cleaning test set forth in section 3.1.1.1. For a gas oven, also measure in watt-hours (kJ) any electrical energy, E_{IS}, consumed by ignition devices or other electrical components required during the self-cleaning test.

3.2.1.3 *Gas consumption of continuously burning pilot lights.* Measure the gas consumption of the pilot lights, P_O, in standard cubic feet (L) of gas and the test duration, L_O, in hours for the test set forth in Section 3.1.1.2. If a gas flow rate meter is used, measure the flow rate, P_R, in standard cubic feet per hour (L/s).

3.2.1.4 *Clock power.* If the conventional oven, conventional range, or microwave/conventional range includes an electric clock which is on continuously, and the power rating in watts (J/s) of this feature is not known, measure the clock power, P_{CL}, in watts (J/s.)

3.2.2 *Conventional surface unit test energy consumption.* For the surface unit under test, measure the energy consumption, E_{CT}, in standard cubic feet (L) of gas or watt-hours of electricity, and the test block temperature, T_{CT}, at the end of the 15 minute (reduced input setting) test interval for the test specified in section 3.1.2 and the total time, T_T, in hours, that the unit is under test. Measure any electrical energy, E_{IC}, consumed by an ignition device of a gas heating element in watt-hours.

3.2.2.1 *Gas consumption of continuously burning pilot lights.* If the conventional gas cooking top under test has one or more continuously burning pilot lights, measure the gas consumed during the test by the pilot lights, P_C, in standard cubic feet (L) of gas, and the test duration, L_C, in hours as specified in section 3.1.2.1. If a gas flow rate meter is used, measure the flow rate, P, in standard cubic feet per hour (L/s).

3.2.3 *Microwave oven test energy consumption and power input.* Measurements are to be made as specified in section 4, Paragraphs 12.4 and 13 of IEC 705. Measure the electrical input energy, E_M, in watt-hours consumed by the microwave oven during the test. Repeat all tests three times.

3.3 *Recorded values.*

3.3.1 Record the test room temperature, T_R, at the start and end of each test, as determined in section 2.5.

3.3.2 Record measured test block weights W_1, W_2, and W_3 in pounds (kg).

3.3.3 Record the initial temperature, T_I, of the test block under test.

3.3.4 For a conventional oven with a thermostat which operates by cycling on and off, record the conventional oven test measurements T_A, E_A, T_B, E_B, T_C, E_C, T_D, and E_D. If the thermostat controls the oven temperature without cycling on and off, record E_O. For a gas oven which also uses electrical energy for the ignition or operation of the oven, also record E_{IO}.

3.3.5 For a conventional oven that can be operated with or without forced convection and the oven thermostat controls the oven temperature without cycling on and off, measure the energy consumed with the forced convection mode, $(E_O)_1$, and without the forced convection mode, $(E_O)_2$. If the conventional oven operates with or without forced convection and the thermostat controls the oven temperature by cycling on and off, record the conventional oven test measurements T_A, E_A, T_B, E_B, T_C, E_C, T_D, and E_D. For a gas oven that can be operated with or without forced convection, measure any electrical energy consumed by an ignition device or other electrical components used during the forced convection mode, $(E_{IO})_1$, and without using the forced convection mode, $(E_{IO})_2$.

3.3.6 Record the measured energy consumption, E_S, and for a gas oven, any electrical energy, E_{IS}, for the test of the self-cleaning operation of a conventional oven.

3.3.7 Record the gas flow rate, P_R; or the gas consumption, P_O, and the elapsed time, L_O, that any continuously burning pilot lights of a conventional oven are under test.

3.3.8 Record the clock power measurement or rating, P_{CL}, in watts.

3.3.9 For the surface unit under test, record the energy consumption, E_{CT}, the final test block temperature, T_{CT}, the total test time, T_T. For a gas cooking top which uses electrical energy for ignition of the burners, also record E_{IC}.

3.3.10 Record the gas flow rate, P; or the gas consumption, P_C, and the elapsed time, L_C, that any continuously burning pilot lights of a conventional gas cooking top are under test.

3.3.11 Record the heating value, H_n, as determined in section 2.2.2.2 for the natural gas supply.

3.3.12 Record the heating value, H_p, as determined in section 2.2.2.3 for the propane supply.

3.3.13 Record the electrical input energy and power input E_M and P_M for the microwave oven test; the initial and final temperature, T_1 and T_2, of the test water load; the mass of the test container before filling with the test water load and the mass of the test water load, M_C and M_W respectively; and the measured room temperature, T_O; as determined in section 3.2.3.

4. Calculation of Derived Results From Test Measurements

4.1 *Conventional oven.*

4.1.1 *Test energy consumption.* For a conventional oven with a thermostat which operates by cycling on and off, calculate the test energy consumption, E_O, corresponding to T_O with the aid of the figure in section 5 of this appendix, expressed in watt-hours (kJ) for electric ovens and in Btu's (kJ) for gas ovens, and defined as:

$$E_0 = E_{AB} + \left[\left(\frac{T_0 - T_{AB}}{T_{CD} - T_{AB}}\right) \times (E_{CD} - E_{AB})\right]$$

for electric ovens,

and, $$E_0 = (E_{AB} \times H) + \left[\left(\frac{T_0 - T_{AB}}{T_{CD} - T_{AB}}\right) \times (E_{CD} - E_{AB}) \times H\right]$$

for gas ovens

Where:

H=either H_n or H_p, the heating value of the gas used in the test as specified in section 2.2.2.2 and section 2.2.2.3, expressed in Btu's per standard cubic foot (kJ/L).

T_O=234°F (112.2°C) plus the initial test block temperature.

and,

$$T_{AB} = \frac{(T_A + T_B)}{2}$$

$$T_{CD} = \frac{(T_C + T_D)}{2}$$

$$E_{AB} = \frac{(E_A + E_B)}{2}$$

$$E_{CD} = \frac{(E_C + E_D)}{2}$$

Where:

T_A=block temperature in °F (°C) at the end of the last ''ON'' period of the conventional oven before the test block reaches T_O.

T_B=block temperature in °F (°C) at the beginning of the ''ON'' period following the measurement of T_A.

T_C=block temperature in °F (°C) at the end of the ''ON'' period which starts with T_B.

T_D=block temperature in °F (°C) at the beginning of the ''ON'' period which follows the measurement of T_C.

E_A=volume of gas consumed in standard cubic feet (L) at the end of the last ''ON'' period before the test block reaches T_O.

E_B=volume of gas consumed in standard cubic feet (L) of gas at the beginning of the ''ON'' period following the measurement T_A.

E_C=volume of gas consumed in standard cubic feet (L) of gas at the end of the ''ON'' period which starts with T_B.

E_D=volume of gas consumed in standard cubic feet (L) of gas at the beginning of the ''ON'' period which follows the measurement of T_C.

4.1.1.1 *Average test energy consumption.* If the conventional oven can be operated with or without forced convection, determine the average test energy consumption, E_O and E_{IO}, in watt-hours (kJ) for electric ovens and Btu's (kJ) for gas ovens using the following equations:

$$E_0 = \frac{(E_0)_1 + (E_0)_2}{2}$$

$$E_{10} = \frac{(E_{10})_1 + (E_{10})_2}{2}$$

Where:

$(E_O)_1$=test energy consumption using the forced convection mode in watt-hours (kJ) for electric ovens and in Btu's (kJ) for gas ovens as measured in section 3.2.1.1.

$(E_O)_2$=test energy consumption without using the forced convection mode in watt-hours (kJ) for electric ovens and in Btu's (kJ) for gas ovens as measured in section 3.2.1.1.

$(E_{IO})_1$=electrical energy consumption in watt-hours (kJ) of a gas oven in forced convection mode as measured in section 3.2.1.1.

$(E_{IO})_2$=electrical energy consumption in watt-hours (kJ) of a gas oven without using the forced convection mode as measured in section 3.2.1.1.

4.1.2 *Conventional oven annual energy consumption.*

4.1.2.1 *Annual cooking energy consumption.*

4.1.2.1.1 *Annual primary energy consumption.* Calculate the annual primary energy consumption for cooking, E_{CO}, expressed in kilowatt-hours (kJ) for electric ovens and in Btu's (kJ) for gas ovens, and defined as:

$$E_{C0} = \frac{E_0 \times H_e \times O_0}{W_1 \times C_\rho \times T} \quad \text{for electric ovens,}$$

Where:

E_O=test energy consumption as measured in section 3.2.1 or as calculated in section 4.1.1 or section 4.1.1.1.

H_e=3.412 Btu/Wh (3.6 kJ/Wh,) conversion factor of watt-hours to Btu's.

O_O=35.5 kWh per year, annual useful cooking energy output of conventional electric oven.

W_1=measured weight of test block in pounds (kg).

C_p=0.23 Btu/lb-°F (0.96 kJ/kg·°C), specific heat of test block.

T=234°F (112.2°C), temperature rise of test block.

or,

$$E_{C0} = \frac{E_0 \times O_0}{W_1 \times C_\rho \times T} \quad \text{for gas ovens,}$$

Where:

E_O=test energy consumption as measured in section 3.2.1. or as calculated in section 4.1.1 or section 4.1.1.1.

O_O=124,200 Btu (131,038 kJ) per year, annual useful cooking energy output of conventional gas oven.

W_1, C_p and T are the same as defined above.

4.1.2.1.2 *Annual secondary energy consumption for cooking of gas ovens.* Calculate the annual secondary energy consumption for cooking, E_{SO}, expressed in kilowatt-hours and defined as:

$$E_{S0} = \frac{E_{I0} \times H_e \times O_0}{W_1 \times C_\rho \times T},$$

Where:

E_{IO}=electrical test energy consumption as measured in section 3.2.1 or as calculated in section 4.1.1.1.

O_O=35.5 kWh per year, annual useful cooking energy output.

H_e, W_1, C_p, and T are as defined in section 4.1.2.1.1.

4.1.2.2 *Annual energy consumption of any continuously burning pilot lights.* Calculate the annual energy consumption of any continuously burning pilot lights, E_{PO}, expressed in Btu's (kJ) and defined as:

$$E_{P0} = P_R \times H \times (A - B),$$

or,

$$E_{P0} = \frac{P_0}{L_0} \times H \times (A - B)$$

Where:

P_R=pilot gas flow rate in standard cubic feet per hour (L/s), as measured in section 3.2.1.2.

P_O=standard cubic feet (L) of gas consumed by any continuously burning pilot lights, as measured in section 3.2.1.2.

L_O=elapsed test time in hours for any continuously burning pilot lights tested, as measured in section 3.2.1.2.

H=H_n or H_p,the heating value of the gas used in the test as specified in section 2.2.2.2 and section 2.2.2.3 in Btu's per standard cubic foot (kJ/L).

A=8,760, number of hours in a year.

B=300, number of hours any continuously burning pilot lights contribute to the heating of an oven for cooking food.

4.1.2.3 *Annual conventional oven self-cleaning energy.*

4.1.2.3.1 *Annual primary energy consumption.* Calculate the annual primary energy consumption for conventional oven self-cleaning operations, E_{SC}, expressed in kilowatt-hours (kJ) for electric ovens and in Btu's (kJ) for gas ovens, and defined as:

$$E_{SC} = E_S \times S_e \times C, \quad \text{for electric ovens,}$$

Where:

E_S=energy consumption in watt-hours, as measured in section 3.2.1.2.

S_e=11, average number of times a self-cleaning operation of a conventional electric oven is used per year.

C=.001 kW/W conversion factor for watts to kilowatts.

or,

$$E_{SC} = E_S \times H \times S_g, \quad \text{for gas ovens,}$$

Where:

E_S=gas consumption in standard cubic feet (L), as measured in section 3.2.1.2.

$H=H_n$ or H_p, the heating value of the gas used in the test as specified in section 2.2.2.2 and section 2.2.2.3 in Btu's per standard cubic foot (kJ/L).

S_g=7, average number of times a self-cleaning operation of a conventional gas oven is used per year.

4.1.2.3.2 *Annual secondary energy consumption for self-cleaning operation of gas ovens.* Calculate the annual secondary energy consumption for self-cleaning operations of a gas oven, E_{SS}, expressed in kilowatt-hours and defined as:

$$E_{SS} = E_{IS} \times S_g \times C,$$

Where:

E_{IS} = electrical energy consumed during the self-cleaning operation of a conventional gas oven, as measured in section 3.2.1.2.

S_g = 7, average number of times a self-cleaning operation of a conventional gas oven is used per year.

C = .001 kW/W conversion factor for watts to kilowatts.

4.1.2.4 *Annual clock energy consumption.* Calculate the annual energy consumption of any constantly operating electric clock, E_{CL}, expressed in kilowatt-hours and defined as:

$$E_{CL} = P_{CL} \times H_K \times C,$$

Where:

P_{CL} = power rating of clock which is on continuously, in watts, as measured in section 3.2.1.3.

H_K = 8,760, number of hours in a year.

C = .001 kW/W conversion factor for watts to kilowatts.

4.1.2.5 *Total annual energy consumption of a single conventional oven.*

4.1.2.5.1 *Conventional electric oven energy consumption.* Calculate the total annual energy consumption of a conventional electric oven, E_{AO}, expressed in kilowatt-hours and defined as:

$$E_{AO} = E_{CO} + E_{SC} + E_{CL},$$

Where:

E_{CO} = annual primary cooking energy consumption as determined in section 4.1.2.1.1.

E_{SC} = annual primary self-cleaning energy consumption as determined in section 4.1.2.3.1.

E_{CL} = annual clock energy consumption as determined in section 4.1.2.4.

4.1.2.5.2 *Conventional gas oven energy consumption.* Calculate the total annual gas energy consumption of a conventional gas oven, E_{AOG}, expressed in Btu's (kJ) and defined as:

$$E_{AOG} = E_{CO} + E_{PO} + E_{SC},$$

Where:

E_{CO} = annual primary cooking energy consumption as determined in section 4.1.2.1.1.

E_{PO} = annual pilot light energy consumption as determined in section 4.1.2.2.

E_{SC} = annual primary self-cleaning energy consumption as determined in section 4.1.2.3.1.

If the conventional gas oven uses electrical energy, calculate the total annual electrical energy consumption, E_{AOE}, expressed in kilowatt-hours and defined as:

$$E_{AOE} = E_{SO} + E_{SS} + E_{CL},$$

Where:

E_{SO} = annual secondary cooking energy consumption as determined in section 4.1.2.1.2.

E_{SS} = annual secondary self-cleaning energy consumption as determined in section 4.1.2.3.2.

E_{CL} = annual clock energy consumption as determined in section 4.1.2.4.

4.1.2.6 *Total annual energy consumption of multiple conventional ovens.* If the cooking appliance includes more than one conventional oven calculate the total annual energy consumption of the conventional ovens using the following equations:

4.1.2.6.1 *Conventional electric oven energy consumption.* Calculate the total annual energy consumption, E_{TO}, in kilowatt-hours and define as:

$$E_{TO} = E_{ACO} + E_{ASC} + E_{CL},$$

Where:

$$E_{ACO} = \frac{1}{n}\sum_{i=1}^{n}(E_{CO})_i,$$

average annual primary energy consumption for cooking,

Where:

n = number of conventional ovens in the basic model.

E_{CO} = annual primary energy consumption for cooking as determined in section 4.1.2.1.1.

$$E_{ASC} = \frac{1}{n}\sum_{i=1}^{n}\left(E_{SC}\right)_i,$$

average annual self-cleaning energy consumption,

Where:

n = number of self-cleaning conventional ovens in the basic model.

E_{SC} = annual primary self-cleaning energy consumption as determined according to section 4.1.2.3.1.

E_{CL} = clock energy consumption as determined according to section 4.1.2.4.

4.1.2.6.2 *Conventional gas oven energy consumption.* Calculate the total annual gas energy consumption, E_{TOG}, in Btu's (kJ) and define as:

$$E_{TOG} = E_{ACO} + E_{ASC} + E_{TPO},$$

Where:

E_{ACO} = average annual primary energy consumption for cooking in Btu's (kJ) as defined in section 4.1.2.6.1.

E_{ASC} = average annual self-cleaning energy consumption in Btu's (kJ) as defined in section 4.1.2.6.1.

$$E_{TPO} = \sum_{i=1}^{n}\left(E_{PO}\right)_i,$$

total annual energy consumption of any pilot lights,

Where:

E_{PO} = annual energy consumption of any continuously burning pilot lights determined according to section 4.1.2.2.

n = number of pilot lights in the basic model.

If the oven also uses electrical energy, calculate the total annual electrical energy consumption, E_{TOE}, in kilowatt-hours and define as:

$$E_{TOE} = E_{ASO} + E_{AAS} + E_{CL},$$

Where:

$$E_{ASO} = \frac{1}{n}\sum_{i=1}^{n}\left(E_{SO}\right)_i,$$

average annual secondary energy consumption for cooking,

Where:

n = number of conventional ovens in the basic model.

E_{SO} = annual secondary energy consumption for cooking of gas ovens as determined in section 4.1.2.1.2.

$$E_{AAS} = \frac{1}{n}\sum_{i=1}^{n}\left(E_{SS}\right)_i,$$

average annual secondary self-cleaning energy consumption,

Where:

n = number of self-cleaning ovens in the basic model.

E_{SS} = annual secondary self-cleaning energy consumption of gas ovens as determined in section 4.1.2.3.2.

E_{CL} = annual clock energy consumption as determined in section 4.1.2.4.

4.1.3 *Conventional oven cooking efficiency.*

4.1.3.1 *Single conventional oven.* Calculate the conventional oven cooking efficiency, Eff_{AO}, using the following equations:

For electric ovens:

$$Eff_{AO} = \frac{W_1 \times C_p \times T}{E_O \times H_e},$$

and,

For gas ovens:

$$Eff_{AO} = \frac{W_1 \times C_p \times T}{E_O + \left(E_{10} \times H_e\right)},$$

Where:

W_1 = measured weight of test block in pounds (kg).

C_p = 0.23 Btu/lb-°F (0.96 kJ/kg·°C), specific heat of test block.

T = 234°F (112.2°C), temperature rise of test block.

E_O = test energy consumption as measured in section 3.2.1 or calculated in section 4.1.1 or section 4.1.1.1.
H_e = 3.412 Btu/Wh (3.6 kJ/Wh), conversion factor for watt-hours to Btu's.
E_{IO} = electrical test energy consumption according to section 3.2.1 or as calculated in section 4.1.1.1.

4.1.3.2 *Multiple conventional ovens.* If the cooking appliance includes more than one conventional oven, calculate the cooking efficiency for all of the conventional ovens in the appliance, Eff_{TO}, using the following equation:

$$Eff_{T0} = \frac{n}{\sum_{i=1}^{n}\left(\frac{1}{Eff_{A0}}\right)_i},$$

Where:
n = number of conventional ovens in the cooking appliance.
Eff_{AO} = cooking efficiency of each oven determined according to section 4.1.3.1.

4.1.4 *Conventional oven energy factor.* Calculate the energy factor, or the ratio of useful cooking energy output to the total energy input, R_O, using the following equations:

For electric ovens,

$$R_O = \frac{O_O}{E_{AO}},$$

Where:
O_O = 35.5 kWh per year, annual useful cooking energy output.
E_{AO} = total annual energy consumption for electric ovens as determined in section 4.1.2.5.1.

For gas ovens:

$$R_O = \frac{O_O}{E_{AOG} + (E_{AOE} \times H_e)},$$

Where:
O_O = 124,200 Btu (131,038 kJ) per year, annual useful cooking energy output.
E_{AOG} = total annual gas energy consumption for conventional gas ovens as determined in section 4.1.2.5.2.
E_{AOE} = total annual electrical energy consumption for conventional gas ovens as determined in section 4.1.2.5.2.
H_e = 3,412 Btu/kWh (3.6 kJ/Wh), conversion factor for kilowatt-hours to Btu's.

4.2 *Conventional cooking top.*

4.2.1 *Conventional cooking top cooking efficiency.*

4.2.1.1 *Electric surface unit cooking efficiency.* Calculate the cooking efficiency, Eff_{SU}, of the electric surface unit under test, defined as:

$$Eff_{SU} = W \times C_p \times \left(\frac{T_{SU}}{H_e \times E_{CT}}\right),$$

Where:
W = measured weight of test block, W_2 or W_3, expressed in pounds (kg).
C_p = 0.23 Btu/lb-°F (0.96 kJ/kg-°C), specific heat of test block.
T_{SU} = temperature rise of the test block: Final test block temperature, T_{CT}, as determined in section 3.2.2, minus the initial test block temperature, T_I, expressed in °F (°C).
H_e = 3.412 Btu/Wh (3.6 kJ/Wh,) conversion factor of watt-hours to Btu's.
E_{CT} = measured energy consumption, as determined according to section 3.2.2, expressed in watt-hours.

4.2.1.2 *Gas surface unit cooking efficiency.* Calculate the cooking efficiency, Eff_{SU}, of the gas surface unit under test, defined as:

$$Eff_{SU} = \frac{W_3 \times C_p \times T_{SU}}{E},$$

Where:
W_3 = measured weight of test block as measured in section 3.3.2, expressed in pounds (kg).
C_p and T_{SU} are the same as defined in section 4.2.1.1.

and,

$$E = \left[(E_{CT} - E_{CP}) \times H\right] + (E_{IC} \times H_e),$$

Where:
E_{CT} = total gas consumption for the gas surface unit test as measured in section 3.2.2.
E_{IC} = electrical energy consumed by an ignition device of a gas surface unit as measured in section 3.2.2.
H_e = 3.412 Btu/Wh, conversion factor of watt-hours to Btu's.
H = either H_n or H_p, the heating value of the gas used in the test as specified in section 2.2.2.2 and section 2.2.2.3, expressed in Btu's per standard cubic foot (kJ/L) of gas.
E_{CP} = P x T_T, (pilot consumption, in standard cubic feet (L), during unit test), where:

$$P = \frac{P_c}{L_c}, \text{ (pilot flow in standard cubic feet per hour)}$$

Where:
P_C = any pilot lights gas consumption defined in section 3.2.2.1.
L_C = elapsed time of the cooking top pilot lights test as defined in section 3.1.2.1.
T_T = the elapsed test time as defined in section 3.2.2.

4.2.1.3 *Conventional cooking top cooking efficiency.* Calculate the conventional cooking top cooking efficiency, Eff_{CT}, using the following equation:

$$Eff_{CT} = \frac{1}{n}\sum_{i=1}^{n}(Eff_{SU})_i,$$

Where:
n = number of surface units in the cooking top.
Eff_{SU} = the efficiency of each of the surface units, as determined according to section 4.2.1.1 or section 4.2.1.2.

4.2.2 *Conventional cooking top annual energy consumption.*

4.2.2.1 *Conventional electric cooking top energy consumption.* Calculate the annual energy consumption of an electric cooking top, E_{CA}, in kilowatt-hours per year, defined as:

$$E_{CA} = \frac{O_{CT}}{Eff_{CT}},$$

Where:
O_{CT} = 209.4 kWh per year, annual useful cooking energy output.
Eff_{CT} = conventional cooking top cooking efficiency as defined in section 4.2.1.3.

4.2.2.2 *Conventional gas cooking top.*

4.2.2.2.1 *Annual cooking energy consumption.* Calculate the annual energy consumption for cooking, E_{CC}, in Btu's (kJ) per year for a gas cooking top, defined as:

$$E_{CC} = \frac{O_{CT}}{Eff_{CT}},$$

Where:
O_{CT} = 732,500 Btu (772,828 kJ) per year, annual useful cooking energy output.
Eff_{CT} = the gas cooking top efficiency as defined in section 4.2.1.3.

4.2.2.2.2 *Annual energy consumption of any continuously burning gas pilots.* Calculate the annual energy consumption of any continuously burning gas pilot lights of the cooking top, E_{PC}, in Btu's (kJ) per year, defined as:

$$E_{PC} = P \times A \times H,$$

Where:
P = pilot light gas flow rate as defined in section 4.2.1.2, or as measured in section 3.2.2.1.
A = 8,760 hours, the total number of hours in a year.
H = either H_n or H_p, the heating value of the gas used in the test as specified in section 2.2.2.2. and section 2.2.2.3, expressed in Btu's per standard cubic foot (kJ/L) of gas.

4.2.2.2.3 *Total annual energy consumption of a conventional gas cooking top.* Calculate the total annual energy consumption of a conventional gas cooking top, E_{CA}, in Btu's (kJ) per year, defined as:

$$E_{CA} = E_{CC} + E_{PC},$$

Where:
E_{CC} = energy consumption for cooking as determined in section 4.2.2.2.1.
E_{PC} = annual energy consumption of the pilot lights as determined in section 4.2.2.2.2.

4.2.3 *Conventional cooking top energy factor.* Calculate the energy factor or ratio of useful cooking energy output for cooking to the total energy input, R_{CT}, as follows:

For an electric cooking top, the energy factor is the same as the cooking efficiency as determined according to section 4.2.1.3.

For gas cooking tops,

$$R_{CT} = \frac{O_{CT}}{E_{CA}},$$

Where:

O_{CT} = 732,500 Btu (772,828 kJ) per year, annual useful cooking energy output of cooking top.

E_{CA} = total annual energy consumption of cooking top determined according to section 4.2.2.2.3.

4.3 *Combined Components.*

The annual energy consumption and cooking efficiency of a kitchen range, e.g. a cooktop and oven combined, shall be the sum of the annual energy consumption and cooking efficiency of each of its components. The annual energy consumption and cooking efficiency for other combinations of ovens, cooktops and microwaves will also be treated as the sum of the annual energy consumption and cooking efficiency of each of its components. The energy factor of a combined component is the sum of the ratio of the annual useful cooking energy output to the total annual energy consumption of each component.

4.4 *Microwave oven.*

4.4.1 *Microwave oven test energy.* Calculate the microwave oven test energy output, E_T, in watt-hour's (kJ). The calculation is repeated three times as required in section 3.2.3. The average of the three E_T's is used for calculations in 4.4.3 and 4.4.5. For calculations specified in units of energy (watt-hours), use the equation below:

$$E_T = \frac{4.187M_W(T_2 - T_1) + 0.88M_C(T_2 - T_0)}{H_E}$$

Where:

M_W = the measured mass of the test water load, in grams.

M_C = the measured mass of the test container before filling with test water load, in grams.

T_1 = the initial test water load temperature, in °C (°F).

T_2 = the final test water load temperature, in °C (°F).

T_O = the measured ambient room temperature, in °F (°C).

C = 0.88 kJ/kg-°C, (0.210 Btu/lb-°F) specific heat of test container.

C_p = 4.187 kJ/kg-°C, (1.0 Btu/lb-°F) specific heat of water.

H_e = 3.6 kJ/Wh (3.412 Btu/Wh,) conversion factor for Btu's to Watt-hours.

4.4.2 *Microwave oven test power output.* Calculate the microwave oven test power output, P_T, in watts as specified in Section four, paragraph 12.5 of IEC 705. The calculation is repeated for each of the three tests as required in section 3.2.3. The average of the three P_T's is used for calculations in section 4.4.4.

4.4.3 *Microwave oven annual energy consumption.* Calculate the microwave oven annual energy consumption, E_{MO}, in kWh's per year, defined as:

$$E_{MO} = \frac{E_M \times O_M}{E_T}$$

Where:

E_M = the energy consumption as defined in section 3.2.3.

O_M = 77.3 kWh's per year, the microwave oven annual useful cooking energy output.

E_T = the test energy as calculated in section 4.4.1.

4.4.4 *Microwave oven cooking efficiency.* Calculate the microwave oven cooking efficiency, Eff_{MO}, as specified in section four, paragraph 14 of IEC 705.

4.4.5 *Microwave oven energy factor.* Calculate the energy factor or the ratio of the useful cooking energy output to total energy input on a yearly basis, R_{MO}, defined as:

$$R_{MO} = \frac{O_M}{E_{MO}},$$

BILLING CODE 6450–01–P

5. ILLUSTRATION OF CONVENTIONAL OVEN TEST DATA

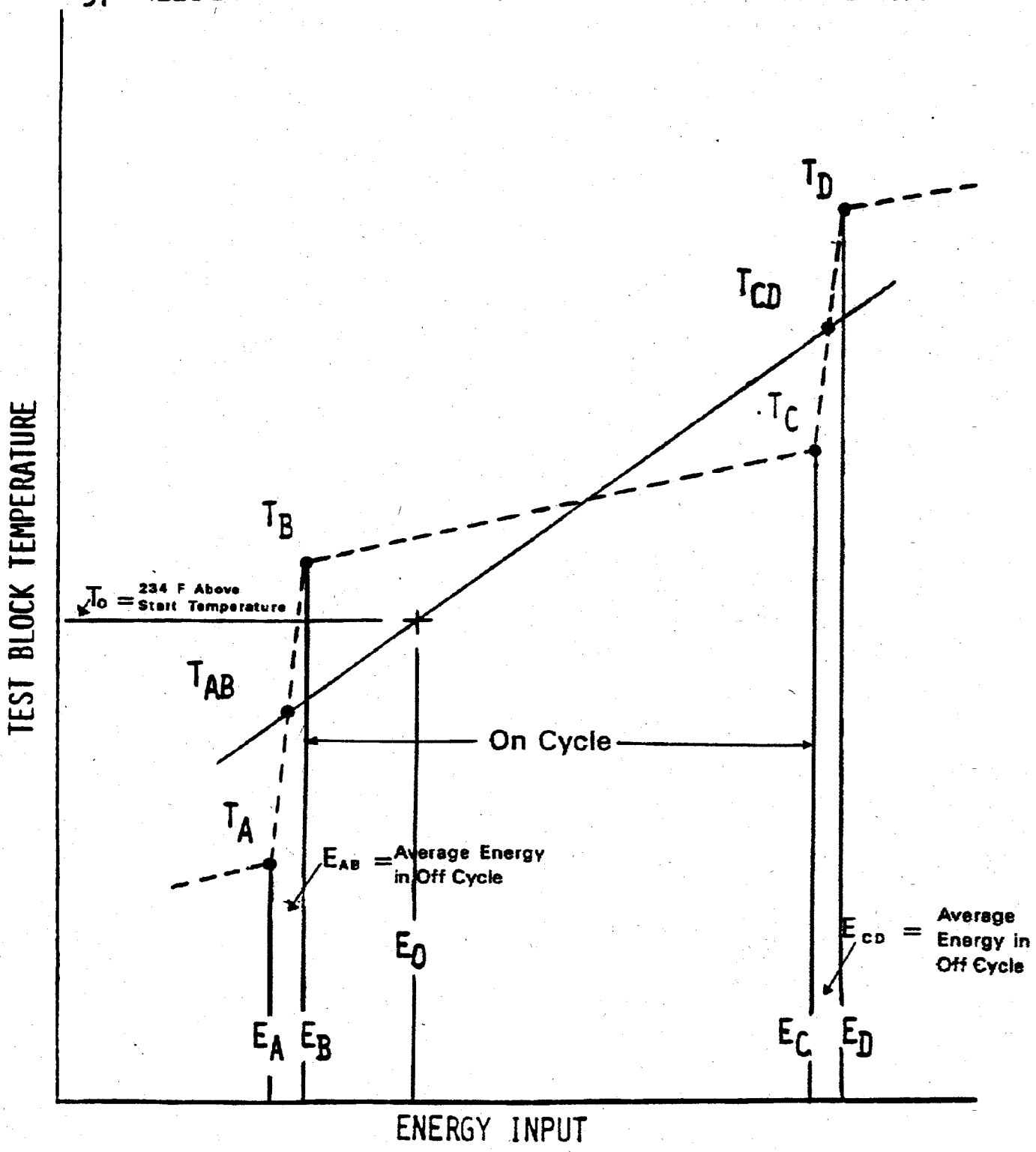

BILLING CODE 6450–01–C

Where:

O_M = 77.3 kWh, annual useful cooking energy output.

E_{MO} = annual total energy consumption as determined in section 4.4.3.

6. Appendix J to subpart B of part 430 is revised to read as follows:

Appendix J to Subpart B of Part 430—Uniform Test Method for Measuring the Energy Consumption of Automatic and Semi-Automatic Clothes Washers

1. Definitions

1.1 *Agitator* means the device that provides the shaking or stirring motion to the clothes for washing. The device shall include all fixtures and other essential assemblies needed for clothes washing in the normal cycle.

1.2 *Bone-dry* means a condition or a load of test cloth which has been dried in a dryer at maximum temperature for a minimum of 10 minutes, removed and weighed before cool down, and then dried again for 10-minute periods until the final weight change of the load is 1 percent or less.

1.3 *Clothes container* means the compartment within the clothes washer that holds the clothes during operation of the machine.

1.4 *Compact* refers to a clothes washer which has a clothes container capacity of less than 1.6 ft^3 (45 L).

1.5 *Deep rinse cycle* refers to a rinse cycle in which the clothes container is filled with water to a selected level and the clothes load is rinsed by agitating it or tumbling it through the water.

1.6 *Front-loader* means a clothes washer which sequentially rotates or tumbles portions of the clothes load above the water level allowing the clothes load to fall freely back into the water. The principal axis of the clothes container is in a horizontal plane and the access to the clothes container is through the front of the machine.

1.7 *Machine-controlled water fill capability* means a clothes washer which has the capability of automatically controlling the level of the water in the tub dependent upon the size of the test load, without operator intervention.

1.8 *Make-up water* means the amount of fresh water needed to supplement the amount of stored water pumped from the external laundry tub back into the clothes washer when the suds-return feature is activated in order to achieve the required water fill level in the clothes washer.

1.9 *Modified energy factor* means the quotient of the cubic foot (liter) capacity of the clothes container divided by the total clothes washer energy consumption per cycle, expressed as the sum of the machine electrical energy consumption, the hot water energy consumption, and the energy required for removal of remaining moisture of the test load for nonwater-heating clothes washers and expressed as the sum of the machine electrical energy consumption and the energy required for removal of moisture of the test load for water-heating clothes washers.

1.10 *Moisture removal energy* means the nominal energy required for a clothes dryer to remove moisture from clothes multiplied by the difference between weighted test load after the normal cycles and the weighted reference (bone-dry) weight of the test load.

1.11 *Nonwater-heating clothes washer* refers to a clothes washer that has both hot and cold water supply pipe connections. This type of clothes washer does not have an internal hot water heater device to generate the energy needed to heat inlet water.

1.12 *Normal cycle* means the cycle recommended by the manufacturer for washing cotton and/or linen clothes.

1.13 *Sensor filled* refers to a type of water fill control which automatically terminates the fill when the water reaches an appropriate level in the tub.

1.14 *Spray rinse cycle* refers to a rinse cycle in which water is sprayed onto the clothes load for a definite period of time without maintaining any specific water level in the clothes container.

1. *Standard* refers to a clothes washer which has a clothes container capacity of 1.6 ft^3 (45 L) or greater.

1.16 *Suds-return* means a feature or option on a clothes washer which causes the stored wash water obtained by utilizing the suds-saver feature to be pumped from the external laundry tub back into the clothes washer.

1.17 *Suds-saver* means a feature or option on a clothes washer which allows the user to store used wash water in an external laundry tub for use with subsequent wash loads.

1.18 *Temperature use factor* means the percentage of the total number of washes a user would wash with a particular wash/rinse temperature setting.

1.19 *Thermostatically controlled valves* refer to clothes washer valves which sense water temperature and adjust valve orifices appropriately to maintain a desired mixed water temperature.

1.20 *Time filled* refers to a type of water fill control which uses a combination of water flow controls in conjunction with time to terminate the water fill cycle.

1.21 *Top-loader-horizontal-axis clothes washer* means a clothes washer which sequentially rotates or tumbles portions of the clothes load above the water level allowing the clothes load to fall freely back into the water. The principal axis of the clothes container is in a horizontal plane and the access to the clothes container is through the top of the clothes washer.

1.22 *Top-loader-vertical-axis clothes washer* means a clothes washer that flexes and oscillates the submerged clothes load through the water by means of mechanical agitation or other movement. The principal axis of the clothes container is in a vertical plane and the access to the clothes container is through the top of the clothes washer.

1.23 *Water consumption factor* means the quotient of the cubic foot (liter) capacity of the clothes washer divided by the total weighted per-cycle water consumption.

1.24 *Water-heating clothes washer* refers to a clothes washer which does not have a supply pipe connection for hot water. This type of clothes washer does have an internal electrical water heating device to generate the energy needed to heat inlet water.

2. Testing Conditions

2.1 *Installation.* Install the clothes washer in accordance with manufacturer's instructions.

2.2 *Electrical energy supply.* Maintain the electrical supply at the clothes washer terminal block within 2 percent of 120/240 or 120/208Y as applicable to the particular terminal block wiring system as specified by the manufacturer. If the clothes washer has a dual voltage conversion capability, conduct the test at the highest voltage specified by the manufacturer.

2.3 *Water temperature.* For nonwater-heating clothes washers not equipped with thermostatically controlled inlet water valves, the temperature of the hot and cold water supply shall be maintained at 100°F ±10°F (37.8°C±5.5°C). For nonwater-heating clothes washers equipped with thermostatic controlled inlet valves, the temperature of the hot water supply shall be maintained at 140°F±5°F (60.0°C±2.8°C) and the cold water supply shall be maintained at 60°F±5°F (15.6°C±2.8°C). For water-heating clothes washers that have infinite or various temperature selection feature, the temperature of the water supply shall be maintained at a minimum of 55°F (12.8°C) and a maximum of 60°F (15.6°C). Water meters shall be installed in both the hot and cold water lines to measure water consumption.

2.4 *Water pressure.* The static water pressure at the hot and cold water inlet connections of the machine shall be maintained during the test at 35 pounds per square inch gauge (psig)±2.5 psig (241.3 kPa±17.2 Kpa). The static water pressure for a single water inlet connection shall be maintained during the test at 35 psig±2.5 psig (241.3 Kpa±17.2 kPa). Water pressure gauges shall be installed in both the hot and cold water lines to measure water pressure.

2.5 *Instrumentation.* Perform all test measurements using the following instruments, as appropriate:

2.5. *Weighing scales.*

2.5.1.1 *Weighing scale for test cloth.* The scale shall have a range of 0 lbs (0 kg) to a maximum of 30 lbs (13.6 kg) with a resolution of at least 0.2 oz (5.7 g) and a maximum error no greater than 0.3 percent of any measured value within the range of 3 lbs (1.4 kg) to 15 lbs (6.8 kg).

2.5.1.2 *Weighing scale for clothes container capacity measurements.* The scale should have a range of 0 lbs (0 kg) to a maximum of 500 lbs (226.8 kg) with a resolution of 0.50 lbs (0.23 kg) and a maximum error no greater than 0.5 percent of the measured value.

2.5.2 *Watt-hour meter.* The watt-hour meter shall have a resolution of at least 1 Wh (3.6 kJ) and a maximum error no greater than 2 percent of the measured value for any demand greater than 50 Wh (180.0 kJ).

2.5.3 *Temperature sensing device.* The temperature sensing device shall have an error no greater than ±1°F (±0.6°C) over the range of 32°F (0°C) to 200°F (93.3°C).

2.5.4 *Water meter.* The water meter shall have a resolution no larger than 0.1 gallons (0.4 liters) and a maximum error no greater than 2 percent for all water flow rates from 1 gal/min (3.8 L/min) to 5 gal/min (18.9 L/min).

2.5.5 *Water pressure gauge.* The water pressure gauge shall have a resolution of 1 psig (6.9 kPa) and shall have an error no greater than 5 percent of any measured value over the range of 32.5 psig (224.1 kPa) to 37.5 psig (258.6 kPa).

2.6 *Test cloths.*

2.6.1 *Energy test cloth.* The energy test cloth shall be clean and consist of the following:

2.6.1.2 *Pure finished bleached cloth.* Pure finished bleached cloth, made with a momie or granite weave, which is 50 percent cotton and 50 percent polyester and weighs 5.75 oz/yd² (195.0 g/m²) and has 65 ends on the warp and 57 picks on the fill.

2.6.1.3 *Cloth material.* Cloth material that is 24 in by 36 in (61.0 cm by 91.4 cm) and has been hemmed to 22 in by 34 in (55.9 cm by 86.4 cm) before washing. The maximum shrinkage after five washes shall not be more than four percent on the length and width.

2.6.1.4 *Number of tests.* The number of test runs on the same energy test cloth shall not exceed 25 runs.

2.6.2 *Energy stuffier cloths.* The energy stuffier cloths shall be made from energy test cloth material and shall consist of pieces of material that are 12 in by 12 in (30.5 cm by 30.5 cm) and have been hemmed to 10 in by 10 in (25.4 cm by 25.4 cm) before washing. The maximum shrinkage after five washes shall not be more than four percent on the length and width. The number of test runs on the same energy stuffier cloth shall not exceed 25 runs.

2.7 *Composition of test loads.*

2.7.1 *Seven pound test load.* The seven pound test load shall consist of bone-dry energy test cloths which weigh 7±0.07 lbs (3.18±0.03 kg). Adjustments to the test load to achieve the proper weight can be made by the use of energy stuffier cloths.

2.7.2 *Three pound test load.* The three pound test load shall consist of bone-dry energy test cloths which weigh 3±0.03 lbs (1.36±0.014 kg). Adjustments to the test load to achieve the proper weight can be made by the use of energy stuffier cloths.

2.8 *Use of test loads.*

2.8.1 *Top-loader-vertical-axis clothes washers for calculating energy factor.* The top-loader clothes washer shall be tested without a test load, except for clothes washers equipped with machine controlled water fill capability. Machine controlled water fill capable clothes washers shall use a test load per section 2.8.2.

2.8.2 *Front-loader, top-loader-horizontal-axis, top-loader-vertical-axis with machine-controlled water fill capable and top-loader-vertical-axis for calculating modified energy factor, clothes washers.*

2.8.2.1 *Standard size clothes washer.* When the maximum water fill level is being tested, the test load shall be seven pounds as described in section 2.7.1. When the minimum water fill level is being tested, the test load shall be three pounds as described in section 2.7.2.

2.8.2.2 *Compact size clothes washer.* When either the maximum or minimum water fill levels are being tested, the test load shall be as described in section 2.7.2.

2.8.3 *Method of loading.* Load the energy test clothes by grasping them in the center, shaking them to hang loosely and then dropping them into the clothes container prior to activating the clothes washer.

2.9 *Preconditioning.* If the clothes washer has not previously been tested nor filled with water in the preceding 96 hours, precondition it by running it through a cold rinse cycle and then draining it to insure that the hose, pump, and sump are filled with water.

2.10 *Wash time setting.* The actual wash time (period of agitation) shall be not less than 9.75 minutes.

2.11 *Agitator and spin speed settings.* Where controls are provided for agitation and spin speed selections, set them at the normal cycle settings. If settings at the normal cycle are not offered, set the control settings to the maximum levels permitted on the clothes washer.

3. Test Measurements

3.1 *Clothes container capacity.* Measure the entire volume which a dry clothes load could occupy within the clothes container, according to sections 3.1.1 and 3.1.2.

3.1.1 *Top-loader-vertical-axis clothes washer.* Line the clothes container and agitator with 2 mil (0.051 mm) plastic sheet or use some other method to prevent the water from entering the outer tub container and into the agitator. The agitator shall be in place. Fill the clothes container with water to its uppermost edge. (This filling procedure may require overriding of the fill level control, or manually completing the fill to the top of the container after the fill sensor terminates the fill at maximum level.) Record the weight of the machine before filling it with water and then after filling it with water. The clothes container capacity is calculated as follows:

$$C = \frac{W}{\rho}$$

Where:

C = capacity in cubic feet (liters).
W = mass of water in pounds (kilograms).
ρ = density of water at the measured temperature in pounds per cubic foot (kilograms per liter).

3.1.2 *Front-loader and top-loader-horizontal-axis clothes washer.* For front-loader-horizontal-axis clothes washers, position the tub and shaft axis vertically with the tub facing up. For top-loader-horizontal-axis clothes washers, position the washer in its upright position and the centerline of the inner door at the top position. Line the clothes container with 2 mil (0.051 mm) plastic sheet or use some other method to prevent the water from entering the outer tub container. Fill the clothes container with water to its uppermost edge. (This filling procedure may require overriding of the fill level control, or manually completing the fill to the top of the container after the fill sensor terminates the fill at maximum level.) Record the weight of the machine before filling it with water and then after filling it with water. The clothes container capacity is calculated as follows:

$$C = \frac{W}{\rho}$$

Where:

C = capacity in cubic feet (liters).
W = mass of water in pounds (kilograms).
ρ = density of water at the measured temperature in pounds per cubic foot (kilograms per liter).

3.2 *Test cycle.* Establish the test conditions set forth in section 2 of this appendix. Automatic and semi-automatic clothes washers that have infinite or various temperature selection features that do not conform to the wash/rinse temperature combination settings of sections 5 or 6 shall be tested at the following temperature settings: Hottest setting available on the machine, hot (a minimum of 140°F (60.0°C) and a maximum of 145°F (62.8°C)), warm (a minimum of 100°F (37.8°C) and a maximum of 105°F (40.6°C)), and coldest setting available on the machine.

3.2.1 *Nonwater-heating clothes washers.*

3.2.1.1 *Per-cycle electrical energy consumption.* Set the water level selector at maximum fill available on the clothes washer and insert the appropriate test load, if applicable. Activate the normal cycle of the clothes washer and also any suds-saver switch.

3.2.1.1.1 Measure the electrical energy consumption of the clothes washer for the complete normal cycle.

3.2.1.2 *Hot and cold water consumption with the water level selector at maximum fill available on the clothes washer, if manually controlled.*

3.2.1.2.1 Set the water level selector at maximum fill available on the clothes washer and insert the appropriate test load. Activate the normal cycle of the clothes washer and also any suds-saver switch.

3.2.1.2.2 For automatic clothes washers, set the wash/rinse temperature selector to the hottest TUF combination setting. For semi-automatic clothes washers, open the hot water faucet valve completely and close the cold water faucet valve completely to achieve the hottest TUF combination setting.

3.2.1.2.3 Measure the respective number of gallons (liters) of hot and cold water used to fill the tub for the wash cycle.

3.2.1.2.4 Measure the respective number of gallons (liters) of hot and cold water used for all deep rinse cycles.

3.2.1.2.5 Measure the respective gallons (liters) of hot and cold water used for all spray rinse cycles.

3.2.1.2.6 For automatic clothes washers repeat sections 3.2.1.2.3, 3.2.1.2.4, and 3.2.1.2.5 for each of the other wash/rinse temperature selections available that use hot water. For semi-automatic clothes washers repeat sections 3.2.1.2.3, 3.2.1.2.4, and 3.2.1.2.5 for the TUFs in section 6 with the following water faucet valve adjustments:

	Faucet position	
	Hot valve	Cold valve
Hot	Completely open.	Closed.

	Faucet position	
	Hot valve	Cold valve
Warm	Completely open.	Completely open.
Cold	Closed	Completely open.

3.2.1.2.7 Set the suds-saver switch to activate the suds-return. Repeat sections 3.2.1.2.3 to 3.2.1.2.5 for a Warm/Cold temperature setting.

3.2.1.3 *Hot and cold water consumption with the water level selector at minimum fill.* Set the water level selector at minimum fill and insert the appropriate test load. Activate the normal cycle of the clothes washer and also any suds-saver switch. Repeat sections 3.2.1.2.2 through 3.2.1.2.7.

3.2.1.4 *Hot and cold water consumption for clothes washers that incorporate a partial fill during the rinse cycle.* When sections 3.2.1.2 and 3.2.1.3 cannot be used for clothes washers that incorporate a partial fill during the rinse cycle, activate any suds-saver switch and operate the clothes washer for the complete normal cycle at both the maximum water fill level and the minimum water fill level for each of the wash/rinse temperature selections available. Measure the respective hot and cold water consumed during the complete normal cycle.

3.2.2 *Water-heating clothes washers.* For water-heating clothes washers the following temperature settings will be tested: hottest setting available on the machine, hot (a minimum of 140°F (60.0°C) and a maximum of 145°F (62.8°C)), warm (a minimum of 100°F (37.8°C) and a maximum of 105°F (40.6°C)), and coldest setting available on the machine. These temperature must be confirmed by measurement using a temperature sensing device.

3.2.2.1 *Per-cycle electrical energy consumption at maximum fill.* Set the water level selector at maximum fill available on the clothes washer, if manually controlled.

3.2.2.1.1 *Hottest wash at maximum fill.* Activate the machine and insert the appropriate test load, if applicable. Select the normal or its equivalent wash cycle. Where spin speed selection is available, set the control to its maximum setting. Set the water temperature selector to the hottest setting and activate the wash cycle. Measure and record the kilowatt-hours of electrical energy consumed for the complete cycle as $E_{ht,max}$.

3.2.2.1.2 *Hot wash at maximum fill.* Insert a water temperature sensing device inside the inner drum prior to testing. Activate the machine and insert the appropriate test load, if applicable. Select the normal or its equivalent wash cycle. Where spin speed selection is available, set the control to its maximum setting. Set the water temperature selector to the hot setting (a minimum of 140°F (60.0°C) and a maximum of 145°F (62.8°C)) and activate the wash cycle. Verify the wash water temperature, which must be at a minimum of 140°F (60.0°C) and a maximum of 145°F (62.8°C). If the measured water temperature is not within the specified range, stop testing, adjust the temperature selector accordingly and repeat the procedure. Otherwise, proceed and complete testing. Measure and record the kilowatt-hours of electrical energy consumed for the complete cycle as $E_{h,max}$.

3.2.2.1.3 *Warm wash at maximum fill.* Repeat section 3.2.2.1.2 for a warm wash setting at a minimum of 100°F (37.8°C) and a maximum of 105°F (40.6°C). Measure and record the kilowatt-hours of electrical energy consumed for the complete cycle as $E_{w,max}$.

3.2.2.1.4 *Cold wash at maximum fill.* Repeat section 3.2.2.1.1 for the coldest water setting. Measure and record the kilowatt-hours of electrical energy consumed for the complete cycle as $E_{c,max}$. Ensure that the inlet water temperature is maintained per section 2.3.

3.2.2.2 *Per-cycle water consumption at maximum fill.* Measure the total number of gallons (liters) of water used in sections 3.2.2.1.1, 3.2.2.1.2, 3.2.2.1.3, and 3.2.2.1.4, including all wash, deep rinse, and spray rinse cycles as V_{htmax}, $V_{h,max}$, $V_{w,max}$, and $V_{c,max}$.

3.2.2.3 *Per-cycle electrical energy consumption at minimum fill.* Set the water level selector to the minimum fill position, if manually controlled.

3.2.2.3.1 *Hottest wash at minimum fill.* Repeat section 3.2.2.1.1. Measure and record the kilowatt-hours of electrical energy consumed for the complete cycle as $E_{ht,min}$.

3.2.2.3.2 *Hot wash at minimum fill.* Repeat section 3.2.2.1.2. The hot wash setting shall be at a minimum of 140°F (60.0°C) and a maximum of 145°F (62.8°C). Measure and record the kilowatt-hours of electrical energy consumed for the complete cycle as $E_{h,min}$.

3.2.2.3.3 *Warm wash at minimum fill.* Repeat section 3.2.2.1.2 for warm wash setting at a minimum of 100°F (37.8°C) and a maximum of 105°F (40.6°C). Measure and record the kilowatt-hours of electrical energy consumed for the complete cycle as $E_{w,min}$.

3.2.2.3.4 *Cold wash at minimum fill.* Repeat section 3.2.2.1.1 for the coldest wash setting. Measure and record the kilowatt-hours of electrical energy consumed for the complete cycle as $E_{c,min}$. Ensure that the inlet water temperature is maintained per section 2.3.

3.2.2.4 *Per-cycle water consumption at minimum fill.* Measure the total number of gallons (liters) of water used in sections 3.2.2.3.1, 3.2.2.3.2, 3.2.2.3.3, and 3.2.2.3.4, including all wash, deep rinse, and spray rinse cycles.

3.3 *Moisture content of test load.* Weigh the test loads after completion of test cycles in warm wash/cold rinse or cold wash/cold rinse temperature setting for both maximum and minimum water fills.

3.4 *Data recording.* Record for each test cycle in sections 3.2.1 through 3.3.

3.4.1 *Nonwater-heating clothes washers.*

3.4.1.1 Record the kilowatt-hours of electrical energy, M_E, consumed during the test to operate the clothes washer in section 3.2.1.1.

3.4.1.2 Record the individual gallons (liters) of hot and cold water consumption, Vh_i and Vc_i, measured at maximum fill level for each wash/rinse TUF combination setting in section 3.2.1.2, excluding any fresh make-up water required to complete the fill during a suds-return cycle.

3.4.1.3 Record the individual gallons (liters) of hot and cold water consumption, Vh_j and Vc_j, measured at minimum fill level for each wash/rinse TUF combination setting in section 3.2.1.3, excluding any fresh make-up water required to complete the fill during a suds-return cycle.

3.4.1.4 Record the individual gallons (liters) of hot and cold water, Sh_H and Sc_H, measured at maximum fill for the suds-return cycle.

3.4.1.5 Record the individual gallons (liters) of hot and cold water, Sh_L and Sc_L, measured at minimum fill for the suds-return cycle.

3.4.2 *Water-heating clothes washers.*

3.4.2.1 Record the kilowatt-hours of electrical energy E_{htmax}, $E_{h,max}$, $E_{w,max}$, and $E_{c,max}$ consumed at maximum fill level for each wash/rinse TUF combination setting in sections 3.2.2.1.1, 3.2.2.1.2, 3.2.2.1.3, and 3.2.2.1.4, respectively.

3.4.2.2 Record the total gallons (liters) of water consumption, V_{htmax}, $V_{h,max}$, $V_{w,max}$, and $V_{c,max}$, measured at maximum fill level for each wash/rinse TUF combination setting in section 3.2.2.2.

3.4.2.3 Record the kilowatt-hours of electrical energy, E_{htmin}, $E_{h,min}$, $E_{w,min}$, and $E_{c,min}$ consumed at minimum fill level for each wash/rinse TUF combination setting in section 3.2.2.3.1, 3.2.2.3.2, 3.2.2.3.3, and 3.2.2.3.4, respectively.

3.4.2.4 Record the total gallons (liters) of water consumption, V_{htmin}, $V_{h,min}$, $V_{w,min}$, and $V_{c,min}$, measured at minimum fill level for each wash/rinse TUF combination setting in section 3.2.2.4.

3.4.3 Record the weight of the test loads, W_{max} and W_{min}, after completion of test cycles in section 3.3.

4. Calculation of Derived Results From Test Measurements

4.1 *Energy consumption.*

4.1.1 *Nonwater-heating clothes washers.*

4.1.1.1 *Per-cycle temperature-weighted hot water consumption for maximum and minimum water fill levels.* Calculate for the cycle under test the per-cycle temperature weighted hot water consumption for the maximum water fill level, Vh_{max}, and for the minimum water fill level, Vh_{min}, expressed in gallons per cycle (liters per cycle) and defined as:

$$Vh_{max} = X_1 \sum_{i=1}^{n} \left[Vh_i \times TUF_i \right] + X_2 \left[TUF_W \times Sh_H \right]$$

Where:

Vh_i = reported hot water consumption in gallons per cycle (liters per cycle) at maximum fill for each wash/cycle TUF combination setting, as provided in section 3.4.1.2. (If a clothes washer is equipped with two different wash/rinse temperature selections that have the same basic TUF label (one of them has its water temperature controlled by thermostatically controlled valves and the other one does not), then the higher of the two V_i's shall be used for the calculation.)

TUF_i = applicable temperature use factor in section 5 or 6.

n = number of wash/rinse TUF combination setting available to the user for the clothes washer under test.
TUF_w = temperature use factor for warm wash setting.

For clothes washers equipped with the suds-saver feature:

X_1 = frequency of use without the suds-saver feature = 0.86.
X_2 = frequency of use with the suds-saver feature = 0.14.
Sh_H = fresh make-up water measured during suds-return cycle at maximum water fill level.

For clothes washers not equipped with the suds-saver feature:

$$X_1 = 1.0$$

$$X_2 = 0.0$$

and

$$Vh_{min} = X_1 \sum_{j=1}^{n} \left[Vh_j \times TUF_j \right] + X_2 \left[TUF_W \times Sh_L \right]$$

Where:
Vh_j = reported hot water consumption in gallons per cycle (liters per cycle) at minimum fill for each wash/rinse TUF combination setting, as provided in section 3.4.1.3. (If a clothes washer is equipped with two different wash/rinse temperature selections that have the same basic TUF label (one of them has its water temperature controlled by thermostatically controlled valves and the other one does not), then the higher of the two V_j's shall be used for the calculation.)
TUF_j = applicable temperature use factor in section 5 or 6.
Sh_L = fresh hot make-up water measured during suds-return cycle at minimum water fill level.
n = as defined above.
TUF_w = as defined above.
X_1 = as defined above.
X_2 = as defined above.

4.1.1.2 *Total per-cycle hot water energy consumption for maximum and minimum water fill levels.* Calculate the total per-cycle hot water energy consumption for the maximum water fill level, E_{max} and for the minimum water level, E_{min}, expressed in kilowatt-hours per cycle and defined as:

$$E_{max} = \left[Vh_{max} \times T \times K \times MF \right]$$

Where:
T = temperature rise = 90°F (50°C).
K = water specific heat = 0.00240 kWh/(gal·°F) [0.00114 kWh/(L·°C)].
Vh_{max} = as defined in section 4.1.1.1.
MF = multiplying factor to account for absence of test load=0.94 for top-loader vertical axis clothes washers that are sensor filled, 1.0 for all other clothes washers

and:

$$E_{min} = \left[Vh_{min} \times T \times K \times MF \right]$$

Where:
T = as defined above.
K = as defined above.
Vh_{min} = as defined in section 4.1.1.1.
MF = as defined in section 4.1.1.2.

4.1.1.3 *Total weighted per-cycle hot water energy consumption expressed in kilowatt-hours.* Calculate the total weighted per cycle hot water energy consumption, E_T, expressed in kilowatt-hours per cycle and defined as:

$$E_T = \left[E_{max} \times F_{max} \right] + \left[E_{min} \times F_{min} \right]$$

Where:
F_{max}=usage fill factor=0.72
F_{min}=usage fill factor=0.28
E_{max}=as defined in section 4.1.1.2.
E_{min}=as defined in section 4.1.1.2.

4.1.1.4 *Per-cycle machine electrical energy consumption.* The value recorded in section 3.4.1.1 is the per-cycle machine electrical energy consumption, M_E, expressed in kilowatt-hours per cycle.

4.1.1.5 *Per-cycle water energy consumption using gas-heated or oil-heated water.* Calculate for the normal cycle the per-cycle water consumption, E_{TG}, using gas heated or oil-heated water, expressed in BTU per cycle (megajoules per cycle) and defined as:

$$E_{TG} = E_T \times \frac{1}{e} \times \left[\frac{3412 \text{ BTU}}{\text{kWh}} \right]$$

$$\text{or } E_{TG} = E_T \times \frac{1}{e} \times \left[\frac{3.6 \text{ MJ}}{\text{kWh}} \right]$$

Where:
e = nominal gas or oil water heater efficiency=0.75.
E_T = as defined in section 4.1.1.3.

4.1.1.6 *Total per-cycle energy consumption when electrically heated water is used.* Calculate for the normal cycle the total per-cycle energy consumption, E_{TE}, using electrically heated water, expressed in kilowatt-hours per cycle and defined as:

$E_{TE}=E_T+M_E$

Where:
E_T = as defined in section 4.1.1.3
M_E = as defined in section 4.1.1.4.

4.1.2 *Water-heating clothes washers.*

4.1.2.1 *Per-cycle temperature-weighted energy consumption for maximum and minimum water fill levels.* Calculate for the cycle under test the per-cycle temperature weighted energy consumption for the maximum water fill level, E_{max}, and for the minimum water fill level, E_{min}, expressed in kilowatt-hours per cycle and defined as:

$$E_{max} = \left(0.05 \times E_{ht,max}\right) + \left(0.25 \times E_{h,max}\right) + \left(0.55 \times E_{w,max}\right) + \left(0.15 \times E_{c,max}\right)$$

and,

$$E_{min} = \left(0.05 \times E_{ht,min}\right) + \left(0.25 \times E_{h,min}\right) + \left(0.55 \times E_{w,min}\right) + \left(0.15 \times E_{c,min}\right)$$

Where:
$E_{ht,max}$ = as defined in section 3.2.2.1.1
$E_{h,max}$ = as defined in section 3.2.2.1.2
$E_{w,max}$ = as defined in section 3.2.2.1.3
$E_{c,max}$ = as defined in section 3.2.2.1.4
$E_{ht,min}$ = as defined in section 3.2.2.3.1
$E_{h,min}$ = as defined in section 3.2.2.3.2
$E_{w,min}$ = as defined in section 3.2.2.3.3
$E_{c,min}$ = as defined in section 3.2.2.3.4

4.1.2.2 *Total weighted per-cycle energy consumption expressed in kilowatt-hours.* Calculate the total weighted per cycle energy consumption, E_T, expressed in kilowatt-hours per cycle and defined as:

$$E_T = \left[E_{max} \times F_{max} \right] + \left[E_{min} \times F_{min} \right]$$

Where:
F_{max} = as defined in section 4.1.1.3.
F_{min} = as defined in section 4.1.1.3.
E_{max} = as defined in section 4.1.2.1.
E_{min} = as defined in section 4.1.2.1

4.2 *Per-cycle energy consumption for removal of moisture from test load.* Calculate the per-cycle energy required to remove the moisture of the test load, moisture removal energy, H_V, expressed in kilowatt-hours per cycle and defined as:

$$H_V = \left(W_2 - W_1\right) \times D_{EF}$$

Where:
W_2 = Weighted test load after normal cycles, in lbs (kg).
= $[(W_{max} \times F_{max}) + (W_{min} \times F_{min})]$.
W_{max} = as defined in section 3.4.3.
W_{min} = as defined in section 3.4.3.
F_{max} = as defined in section 4.1.1.3.
F_{min} = as defined in section 4.1.1.3.
W_1 = weighted reference weight (bone dry) of test load.
= 5.88 lbs (2.42 kg) for standard size clothes washers.
= 3 lbs (1.36 kg) for compact size clothes washers.
D_{EF} = nominal energy required for a clothes dryer to remove moisture from clothes, 0.5 kWh/lbs (1.1 kWh/kg).

4.3 *Water consumption.*

4.3.1 *Nonwater-heating clothes washers.*

4.3.1.1 *Per-cycle temperature-weighted water consumption for maximum and minimum water fill levels.* Calculate for the cycle under test the per-cycle temperature-weighted total water consumption for the maximum water fill level, Q_{max}, and for the minimum water fill level, Q_{min}, expressed in gallons per cycle (liters per cycle) and defined as:

$$Q_{max} = X_1 \sum_{i=1}^{n} \left[\left(Vh_i + Vc_i\right) \times TUF_i \right] + X_2 \left[TUF_W \times \left(Sh_H + Sc_H\right) \right]$$

Where:

Vh_i = hot water consumption in gallons per-cycle at maximum fill for each wash/rinse TUF combination setting, as provided in section 3.4.1.2.
Vc_i = cold water consumption in gallons per-cycle at maximum fill for each wash/rinse TUF combination setting, as provided in section 3.4.1.2.
TUF_i = applicable temperature use factor in section 5 or 6.
n = number of wash/rinse TUF combination settings available to the user for the clothes washer under test.
TUF_w = temperature use factor for warm wash setting.

For clothes washers equipped with suds-saver feature:

X_1 = frequency of use without suds-saver feature=0.86
X_2 = frequency of use with suds-saver feature=0.14
Sh_H = fresh hot water make-up measured during suds-return cycle at maximum water fill level.
Sc_H = fresh cold water make-up measured during suds-return cycle at maximum water fill level.

For clothes washers not equipped with suds-saver feature:

$$X_1 = 1.0$$
$$X_2 = 0.0$$

and

$$Q_{min} = X_1 \sum_{j=1}^{n} \left[\left(Vh_j + Vc_j \right) \times TUF_j \right] + X_2 \left[TUF_w \times \left(Sh_L + SC_L \right) \right]$$

Where:

Vh_j = hot water consumption in gallons per cycle (liters per cycle) at minimum fill for each wash/rinse TUF combination setting, as provided in section 3.4.1.3.
Vc_j = cold water consumption in gallons per cycle (liters per cycle) at minimum fill for each wash/rinse TUF combination setting, as provided in section 3.4.1.3.
TUF_j = applicable temperature use factor in section 5 or 6.
Sh_L = fresh hot and cold make-up water measured during suds-return cycle at minimum water fill level.
Sc_L = fresh hot and cold make-up water measured during suds-return cycle at minimum water fill level.
n = as defined in section 4.3.1.1.
TUF_w = as defined in section 4.3.1.1.
X_1 = as defined in section 4.3.1.1.
X_2 = as defined in section 4.3.1.1.

4.3.1.2 *Total weighted per-cycle water consumption.* Calculate the total weighted per cycle water consumption, Q_T, expressed in gallons per cycle (liters per cycle) and defined as:

$$Q_T = \left[Q_{max} \times F_{max} \right] + \left[Q_{min} \times F_{min} \right]$$

Where:

F_{max} = as defined in section 4.1.1.3.
F_{min} = as defined in section 4.1.1.3.
Q_{max} = as defined in section 4.3.1.1.
Q_{min} = as defined in section 4.3.1.1.

4.3.2 *Water-heating clothes washers.*

4.3.2.1 *Per-cycle temperature-weighted water consumption for maximum and minimum water fill levels.* Calculate for the cycle under test the per-cycle temperature weighted total water consumption for the maximum water fill level, Q_{max}, and for the minimum water fill level, Q_{min}, expressed in gallons per cycle (liters per cycle) and defined as:

$$Q_{max} = \left(0.05 \times V_{ht,max}\right) + \left(0.25 \times V_{h,max}\right) + \left(0.55 \times V_{w,max}\right) + \left(0.15 \times V_{c,max}\right)$$

and,

$$Q_{min} = \left(0.05 \times V_{ht,min}\right) + \left(0.25 \times V_{h,min}\right) + \left(0.55 \times V_{w,min}\right) + \left(0.15 \times V_{c,min}\right)$$

Where:

$V_{ht,max}$ = as defined in section 3.2.2.2.
$V_{h,max}$ = as defined in section 3.2.2.2.
$V_{w,max}$ = as defined in section 3.2.2.2.
$V_{c,max}$ = as defined in section 3.2.2.2.
$V_{ht,min}$ = as defined in section 3.2.2.4.
$V_{h,min}$ = as defined in section 3.2.2.4.
$V_{w,min}$ = as defined in section 3.2.2.4.
$V_{c,min}$ = as defined in section 3.2.2.4.

4.3.2.2 *Total weighted per-cycle water consumption.* Calculate the total weighted per cycle water consumption, Q_T, expressed in gallons per cycle (liters per cycle) and defined as:

$$Q_T = \left[Q_{max} \times F_{max} \right] + \left[Q_{min} \times F_{min} \right]$$

Where:

F_{max} = as defined in section 4.1.1.3.
F_{min} = as defined in section 4.1.1.3.
Q_{max} = as defined in section 4.3.2.1.
Q_{min} = as defined in section 4.3.2.1.

4.3.3 *Water consumption factor.* Calculate the water consumption factor, WCF, expressed in cubic feet per gallon per cycle (liter per liter per cycle), as:

$$WCF = \frac{C}{Q_T}$$

Where:

C = as defined in section 3.1.1 or 3.1.2.
Q_T = as defined in section 4.3.1.2 for nonwater-heating clothes washers.

4.4 *Modified energy factor.*

4.4.1 *Nonwater-heating clothes washers.* Calculate the modified energy factor, MEF, expressed in cubic feet per kilowatt-hours per cycle (liters per kilowatt-hours per cycle), as:

$$MEF = \frac{C}{\left(M_E + E_T + H_V\right)}$$

Where:

C = as defined in section 3.1.1 or 3.1.2.
M_E = as defined in section 4.1.1.4.
E_T = as defined in section 4.1.1.3.
H_V = as defined in section 4.2.

4.4.2 *Water-heating clothes washers.* Calculate the modified energy factor, MEF, expressed in cubic feet per kilowatt-hours per cycle (liters per kilowatt-hours per cycle), as:

$$MEF = \frac{C}{\left(E_T + H_V\right)}$$

Where:

C = as defined in section 3.1.1 or 3.1.2.
E_T = as defined in section 4.1.2.2.
H_V = as defined in section 4.2.

5. Applicable Temperature Use Factors for Determining Hot Water Usage for Various Wash/Rinse Temperature Selections for All Automatic Clothes Washers

5.1 *Five-temperature selection (n=5).*

Wash/rinse temperature setting	Temperature use factor (TUF)
Hot/Warm	0.18
Hot/Cold	.12
Warm/Warm	.30
Warm/Cold	.25
Cold/Cold	.15

5.2 *Four-temperature selection (n=4).*

Wash/rinse temperature setting	Temperature use factor (TUF)
Alternate I:	
Hot/Warm	0.18
Hot/Cold	.12
Warm/Cold	.55
Cold/Cold	.15
Alternate II:	
Hot/Warm	0.18
Hot/Cold	.12
Warm/Warm	.30
Warm/Cold	.40
Alternate III:	
Hot/Cold	0.12
Warm/Warm	.18
Warm/Cold	.55
Cold/Cold	.15

5.3 *Three-temperature selection (n=3).*

Wash/rinse temperature setting	Temperature use factor (TUF)
Alternate I:	
Hot/Warm	0.30
Warm/Cold	.55
Cold/Cold	.15
Alternate II:	
Hot/Cold	0.30
Warm/Cold	.55
Cold/Cold	.15
Alternate III:	
Hot/Cold	0.30
Warm/Warm	.55
Cold/Cold	.15

6. Applicable Temperature Use Factors for Determining Hot Water Usage for Various Wash/Rinse Temperature Settings for All Semi-Automatic Clothes Washers

6.1 *Six-temperature settings (n=6).*

Wash/rinse temperature setting	Temperature use factor (TUF)
Hot/Hot	.15
Hot/Warm	.09
Hot/Cold	.06
Warm/Warm	.42
Warm/Cold	.13
Cold/Cold	.15

§ 430.62 [Amended]

7. Section 430.62 (a)(2) is amended by adding ''energy factor (for clothes washers, clothes dryers, and dishwashers)'' after ''(for pool heaters),'' and before ''and annual fuel utilization efficiency''.

[FR Doc. 95–4048 Filed 3–22–95; 8:45 am]

BILLING CODE 6450–01–P

federal register

Thursday
March 23, 1995

Part III

Environmental Protection Agency

40 CFR 9, 122, 123, 131, and 132

Final Water Quality Guidance for the Great Lakes System; Final Rule

ENVIRONMENTAL PROTECTION AGENCY

40 CFR Parts 9, 122, 123, 131, and 132

[FRL–5173–7]

RIN 2040–AC08

Final Water Quality Guidance for the Great Lakes System

AGENCY: U.S. Environmental Protection Agency.

ACTION: Final rule.

SUMMARY: EPA is publishing Final Water Quality Guidance for the Great Lakes System. Great Lakes States and Tribes will use the water quality criteria, methodologies, policies, and procedures in the Guidance to establish consistent, enforceable, long-term protection for fish and shellfish in the Great Lakes and their tributaries, as well as for the people and wildlife who consume them.

The Guidance was initially developed by the Great Lakes States, EPA, and other Federal agencies in open dialogue with citizens, local governments, and industries in the Great Lakes ecosystem. It will affect all types of pollutants, but will target especially the types of long-lasting pollutants that accumulate in the food web of large lakes.

The Guidance consists of water quality criteria for 29 pollutants to protect aquatic life, wildlife, and human health, and detailed methodologies to develop criteria for additional pollutants; implementation procedures to develop more consistent, enforceable water quality-based effluent limits in discharge permits, as well as total maximum daily loads of pollutants that can be allowed to reach the Lakes and their tributaries from all sources; and antidegradation policies and procedures.

Under the Clean Water Act, the States of Illinois, Indiana, Michigan, Minnesota, New York, Ohio, Pennsylvania, and Wisconsin must adopt provisions into their water quality standards and NPDES permit programs within two years (by March 23, 1997) that are consistent with the Guidance, or EPA will promulgate the provisions for them. The Guidance for the Great Lakes System will help establish consistent, enforceable, long-term protection from all types of pollutants, but will place short-term emphasis on the types of long-lasting pollutants that accumulate in the food web and pose a threat to the Great Lakes System. The Guidance includes minimum water quality criteria, antidegradation policies, and implementation procedures that provide a coordinated ecosystem approach for addressing existing and possible pollutant problems and improves consistency in water quality standards and permitting procedures in the Great Lakes System. In addition, the Guidance provisions help establish consistent goals or minimum requirements for Remedial Action Plans (RAPs) and Lakewide Management Plans (LaMPs) that are critical to the success of international multi-media efforts to protect and restore the Great Lakes ecosystem.

EFFECTIVE DATE: April 24, 1995.

ADDRESSES: The public docket for this rulemaking, including applicable **Federal Register** documents, public comments in response to these documents, the Final Water Quality Guidance for the Great Lakes System, Response to Comments Document, other major supporting documents, and the index to the docket are available for inspection and copying at U.S. EPA Region 5, 77 West Jackson Blvd., Chicago, IL 60604 by appointment only. Appointments may be made by calling Wendy Schumacher (telephone 312–886–0142).

Information concerning the Great Lakes Initiative (GLI) Clearinghouse is available from Ken Fenner, Water Quality Branch Chief, (WQS–16J), U.S. EPA Region 5, 77 W. Jackson Blvd., Chicago, IL 60604 (312–353–2079).

Copies of the Information Collection Request for the Guidance are available by writing or calling Sandy Farmer, Information Policy Branch, EPA, 401 M St., S.W. (Mail Code 2136), Washington, DC 20460 (202–260–2740).

Selected documents supporting the Guidance are also available for viewing by the public at locations listed in section XI of the preamble.

Selected documents supporting the Guidance are available by mail upon request for a fee. Selected documents are also available in electronic format at no incremental cost to users of the Internet. See section XI of the preamble for additional information.

FOR FURTHER INFORMATION CONTACT: Kenneth A. Fenner, Water Quality Branch Chief (WQS–16J), U.S. EPA Region 5, 77 W. Jackson Blvd., Chicago, IL 60604 (312–353–2079).

SUPPLEMENTARY INFORMATION

Preamble Outline

I. Introduction
II. Background
III. Purpose of the Guidence
A. Use the Best Available Science to Protect Human Health, Aquatic Life, and Wildlife
B. Recognize the Unique Nature of the Great Lakes Basin Ecosystem
C. Promote Consistency in Standards and Implementation Procedures While Allowing Appropriate Flexibility to States and Tribes
D. Establish Equitable Strategies to Control Pollution Sources
E. Promote Pollution Prevention Practices
F. Provide Accurate Assessment of Costs and Benefits
IV. Sumarry of the Final Guidance
A. Water Quality Criteria and Methodologies
1. Protection of Aquatic Life
2. Protection of Human Health
3. Protection of Wildlife
4. Bioaccumulation Methodology
B. Implementation Procedures
1. Site-Specific Modifications
2. Variances from Water Quality Standards for Point Sources
3. TMDLs and Mixing Zones
4. Additivity
5. Determining the Need for WQBELs (Reasonable Potential)
6. Intake Pollutants
7. WET
8. Loading Limits
9. Levels of Quantification
10. Compliance Schedules
C. Antidegradation Provisions
D. Regulatory Requirements
V. Costs, Cost-Effectiveness and Benefits
A. Costs
B. Cost-Effectiveness
C. Benefits
VI. Regulatory Flexibility Act
VII. Enhancing the Intergovernmental Partnership Under Executive Order 12875
VIII. Paperwork Reduction Act
IX. Endangered Species Act
X. Judicail Review of Provisions not Amended
XI. Supporting Documents

I. Introduction

Section 118(c)(2) of the Clean Water Act (CWA) (Pub. L. 92–500 as amended by the Great Lakes Critical Programs Act of 1990 (CPA), Pub. L. 101–596, November 16, 1990) required EPA to publish proposed and final water quality guidance on minimum water quality standards, antidegradation policies, and implementation procedures for the Great Lakes System. In response to these requirements, EPA published the Proposed Water Quality Guidance for the Great Lakes System (proposed Guidance) in the **Federal Register** on April 16, 1993 (58 FR 20802). EPA also published four subsequent documents in the **Federal Register** identifying corrections and requesting comments on additional related materials (April 16, 1993, 58 FR 21046; August 9, 1993, 58 FR 42266; September 13, 1993, 58 FR 47845; and August 30, 1994, 59 FR 44678). EPA received over 26,500 pages of comments, data, and information from over 6,000 commenters in response to

these documents and from meetings with members of the public.

After reviewing and analyzing the information in the proposal and these comments, EPA has developed the Final Water Quality Guidance for the Great Lakes System (final Guidance), published in this document and codified in 40 CFR part 132, which includes six appendixes of detailed methodologies, policies, and procedures. This preamble describes the background and purpose of the final Guidance, and briefly summarizes the major provisions. Detailed discussion of EPA's reasons for issuing the final Guidance, analysis of comments and issues, description of specific changes made to the proposed Guidance, and further description of the final Guidance, are provided in ''Final Water Quality Guidance for the Great Lakes System: Supplementary Information Document'' (SID), (EPA, 1995, 820–B–95–001) and in additional technical and supporting documents which are available in the docket for this rulemaking. Copies of the SID and other supporting documents are also available from EPA in electronic format, or in printed form for a fee upon request; see section XI of this preamble.

II. Background

The Great Lakes are one of the outstanding natural resources of the world. They have played a vital role in the history and development of the United States and Canada, and have physical, chemical, and biological characteristics that make them a unique ecosystem. The Great Lakes themselves—Lakes Superior, Huron, Michigan, Erie and Ontario and their connecting channels—plus all of the streams, rivers, lakes and other bodies of water that are within the drainage basin of the Lakes collectively comprise the Great Lakes System.

The System spans over 750 miles across eight States—New York, Pennsylvania, Ohio, Michigan, Indiana, Illinois, Wisconsin and Minnesota—and the Province of Ontario. The Lakes contain approximately 18 percent of the world's and 95 percent of the United States' fresh surface water supply. The Great Lakes are a source of drinking water and energy, and are used for recreational, transportation, agricultural and industrial purposes by the more than 46 million Americans and Canadians who inhabit the Great Lakes region, including 29 Native American tribes. Over 1,000 industries and millions of jobs are dependent upon water from the Great Lakes. The Great Lakes System also supports hundreds of species of aquatic life, wildlife and plants along more than 4,500 miles of coastline which boast six National Parks and Lakeshores, six National Forests, seven National Wildlife Refuges, and hundreds of State parks, forests and sanctuaries.

Because of their unique features, the Great Lakes are viewed as important to the residents of the region, and to the Nation as a whole. The natural resources of the region have contributed to the development of its economy. The Lakes' natural beauty and aquatic resources form the basis for heavy recreational activity. The Great Lakes Basin Ecosystem—the interacting components of air, land, water and living organisms, including humans, that live within the Great Lakes drainage basin—is a remarkably diverse and unique ecosystem important in the global ecology.

In the past few decades, the presence of environmental contaminants in the Great Lakes has been of significant concern. In spite of the fact that the Great Lakes contain 5,500 cubic miles of water that cover a total surface area of 94,000 square miles, they have proved to be sensitive to the effects of pollutants that accumulate in them. The internal responses and processes that operate in the Great Lakes because of their depth and long hydraulic residence times cause pollutants to recycle between biota, sediments and the water column.

The first major basin-wide environmental problem in the Great Lakes emerged in the late 1960s, when increased nutrients had dramatically stimulated the growth of green plants and algae, reduced dissolved oxygen levels, and accelerated the process of eutrophication. As oxygen levels continued to drop, certain species of insects and fish were displaced from affected areas of the Great Lakes Basin Ecosystem. Environmental managers determined that a lakewide approach was necessary to adequately control accelerated eutrophication. From the late 1960s through the late 1970s, United States and Canadian regulatory agencies agreed on measures to limit the loadings of phosphorus, including effluent limits on all major municipal sewage treatment facilities, limitations on the phosphorus content in household detergents, and reductions in nonpoint source runoff loadings. As a result of all of these efforts, open lake phosphorus concentrations have declined, and phosphorus loadings from municipal sewage treatment facilities have been reduced by an estimated 80 to 90 percent. These reductions have resulted in dramatic improvements in nearshore water quality and measurable improvements in open lake conditions.

More recently, scientists and public leaders have reached a general consensus that the presence of environmentally persistent, bioaccumulative contaminants is a serious environmental threat to the Great Lakes Basin Ecosystem. Beginning in 1963, adverse environmental impacts in the form of poor reproductive success and high levels of the pesticide DDT were observed in herring gulls in Lake Michigan. Through ongoing research, scientists have detected 362 contaminants in the Great Lakes System. Of these, approximately one third have toxicological data showing that they can have acute or chronic toxic effects on aquatic life, wildlife and/or human health. Chemicals that have been found to bioaccumulate at levels of concern in the Great Lakes include, but are not limited to, polychlorinated biphenyls (PCBs), mercury, DDT, dioxin, chlordane, and mirex. The main route of exposure to these chemicals for humans is through the consumption of Great Lakes fish.

Potential adverse human health effects by these pollutants resulting from the consumption of fish include both the increased risk of cancer and the potential for systemic or noncancer risks such as kidney damage. EPA has calculated health risks to populations in the Great Lakes basin from consumption of contaminated fish based on exposure to eight bioaccumulative pollutants: chlordane, DDT, dieldrin, hexachlorobenzene, mercury, PCBs, 2,3,7,8–TCDD, and toxaphene. These chemicals were chosen based on their potential to cause adverse human health effects (i.e., cancer or disease) and the availability of information on fish tissue contaminant concentrations from the Great Lakes.

Based on these data, EPA estimates that the lifetime cancer risks for Native Americans in the Great Lakes System due to ingestion of contaminated fish at current concentrations range from 1.8×10^{-3} (Lake Superior) (1.8 in one thousand) to 3.7×10^{-2} (Lake Michigan) (3.7 in 100). Estimated risks to low income minority sport anglers range from 2.5×10^{-3} (2.5 in one thousand) (Lake Superior) to 1.2×10^{-2} (1.2 in 100) (Lake Michigan). Estimated risks for other sport anglers range from 9.7×10^{-4} (9.7 in ten thousand) (Lake Superior) to 4.5×10^{-3} (4.5 in one thousand) (Lake Michigan). (See section I.B.2.a of the SID.) In comparison, EPA has long maintained that 1×10^{-4} (one in ten thousand) to 1×10^{-6} (one in 1 million) is an appropriate range of risk to protect human health.

EPA also estimates a high potential risk of systemic (noncancer) injury to populations in the Great Lakes basin due to ingestion of fish contaminated with these pollutants at current concentrations. The systemic adverse health effects associated with the assessed contaminants are described in section I.B of the SID.

Although the Great Lakes States and EPA have moved forward to deal with these problems, control of persistent, bioaccumulative pollutants proved to be more complex and difficult than dealing with nutrients. As a result, inconsistencies began to be apparent in the ways various States developed and implemented controls for the pollutants. By the mid-1980s, such inconsistencies became of increasing concern to EPA and State environmental managers.

EPA began the Great Lakes Water Quality Initiative (''Initiative'') in cooperation with the Great Lakes States to establish a consistent level of environmental protection for the Great Lakes ecosystem, particularly in the area of State water quality standards and the National Pollutant Discharge Elimination System (NPDES) programs. In the spring of 1989, the Council of Great Lakes Governors unanimously agreed to participate in the Initiative with EPA, because the Initiative supported the principles and goals of the Great Lakes Toxic Substances Control Agreement (Governors' Agreement). Signed in 1986 by the Governors of all eight Great Lakes States, the Governors' Agreement affirmed the Governors' intention to manage and protect the resources of the Great Lakes basin through the joint pursuit of unified and cooperative principles, policies and programs enacted and adhered to by each Great Lakes State.

The Initiative provided a forum for a regional dialogue to establish minimum requirements that would reduce disparities between State water quality controls in the Great Lakes basin. The scope of the Initiative included development of proposed Great Lakes water quality guidance—Great Lakes-specific water quality criteria and methodologies to protect aquatic life, wildlife and human health, procedures to implement water quality criteria, and an antidegradation policy.

Three committees were formed to oversee the Initiative. A Steering Committee (composed of directors of water programs from the Great Lakes States' environmental agencies and EPA's National and Regional Offices) discussed policy, scientific, and technical issues, directed the work of the Technical Work Group and ratified final proposals. The Technical Work Group (consisting of technical staff from the Great Lakes States' environmental agencies, EPA, the U.S. Fish and Wildlife Service, and the National Park Service) prepared proposals on elements of the Guidance for consideration by the Steering Committee. The Public Participation Group (consisting of representatives from environmental groups, municipalities, industry and academia) observed the deliberations of the other two committees, advised them of the public's concerns, and kept its various constituencies apprised of ongoing activities and issues. These three groups were collectively known as the Initiative Committees. From the start, one goal of the Initiative Committees was to develop the Guidance elements in an open public forum, drawing upon the extensive expertise and interest of individuals and groups within the Great Lakes community.

The Initiative efforts were well underway when Congress amended section 118 of the CWA in 1990 through the CPA. The general purpose of these amendments was to improve the effectiveness of EPA's existing programs in the Great Lakes by identifying key treaty provisions agreed to by the United States and Canada in the Great Lakes Water Quality Agreement (GLWQA), imposing statutory deadlines for the implementation of these key activities, and increasing Federal resources for program operations in the Great Lakes System.

Section 118(c)(2) requires EPA to publish proposed and final water quality guidance for the Great Lakes System. This Guidance must conform with the objectives and provisions of the GLWQA (a binational agreement establishing common water quality objectives for the Great Lakes) and be no less restrictive than provisions of the CWA and National water quality criteria and guidance. The Guidance must specify minimum requirements for the waters in the Great Lakes System in three areas: (1) water quality standards (including numerical limits on pollutants in ambient Great Lakes waters to protect human health, aquatic life and wildlife); (2) antidegradation policies; and (3) implementation procedures.

The Great Lakes States must adopt water quality standards, antidegradation policies and implementation procedures for waters within the Great Lakes System which are consistent with the final Guidance within two years of EPA's publication. In the absence of such action, EPA is required to promulgate any necessary requirements within that two-year period. In addition, when an Indian Tribe is authorized to administer the NPDES or water quality standards program in the Great Lakes basin, it will also need to adopt provisions consistent with the final Guidance into their water programs.

On December 6, 1991, the Initiative Steering Committee unanimously recommended that EPA publish the draft Guidance ratified by that group in the **Federal Register** for public review and comment. The agreement that the draft Great Lakes Guidance was ready for public notice did not represent an endorsement by every State of all of the specific proposals. Rather, all parties agreed on the importance of proceeding to publish the draft Great Lakes Guidance in order to further solicit public comment. State Steering Committee members indicated their intent to develop and submit specific comments on the proposed Guidance during the public comment period. EPA worked to convert the agreements reached in principle by the Steering Committee into a formal package suitable for publication in the **Federal Register** as proposed Guidance. EPA generally used the draft proposal ratified by the Steering Committee as the basis for preparing the **Federal Register** proposal package. Modifications were necessary, however, to reflect statutory and regulatory requirements and EPA policy considerations, to propose procedures for State and Tribal adoption of the final Guidance, to provide suitable discussion of various alternative options, and to accommodate necessary format changes. Where modifications were made, the preamble to the proposal described both the modification and the original Steering Committee-approved guidelines, and invited public comment on both. All elements approved by the Steering Committee were either incorporated in the proposed rule or discussed in the preamble to the proposal.

III. Purpose of the Guidance

The final Guidance represents a milestone in the 30 years of effort described above on the part of the Great Lakes stakeholders to define and apply innovative, comprehensive environmental programs in protecting and restoring the Great Lakes. In particular, this publication of the final Guidance culminates six years of intensive, cooperative effort that included participation by the eight Great Lakes States, the environmental community, academia, industry, municipalities and EPA Regional and National offices.

The final Guidance will help establish consistent, enforceable, long-term protection with respect to all types of pollutants, but will place short-term emphasis on the types of long-lasting pollutants that accumulate in the food web and pose a threat to the Great Lakes System. The final Guidance will establish goals and minimum requirements that will further the next phase of Great Lakes programs, including the Great Lakes Toxic Reduction Effort's integrated, multi-media ecosystem approach.

EPA and State development of the Guidance—from drafting through proposal and now final publication—was guided by several general principles that are discussed below.

A. Use the Best Available Science to Protect Human Health, Aquatic Life, and Wildlife

EPA and the Initiative Committees have been committed throughout the Initiative to using the best available science to develop programs to protect the Great Lakes System. In the 1986 Governors' Agreement, the Governors of the Great Lakes States recognized that the problem of persistent toxic substances was the foremost environmental issue confronting the Great Lakes. They also recognized that the regulation of toxic contaminants was scientifically complex because the pollutants are numerous, their pathways into the Lakes are varied, and their effects on the environment, aquatic life and human health are not completely understood. Based on the importance of the Great Lakes Basin Ecosystem and the documented adverse effects from toxic contamination, however, the Governors directed their environmental administrators to jointly develop an agreement and procedure for coordinating the control of toxic releases and achieving greater uniformity of regulations governing such releases within the Great Lakes basin.

As discussed further above, the Initiative was subsequently created to begin work on these goals. EPA and the Great Lakes States, with input from interested parties in the basin, began collecting and analyzing data, comparing regulatory requirements and technical guidance in their various jurisdictions, and drafting specific methodologies and procedures to control the discharge of toxic contaminants. The provisions of the final Guidance were based in large part on these prior efforts of the Initiative Committees, and incorporate the best available science to protect human health, wildlife and aquatic life in the Great Lakes System. For example, the final Guidance includes new criteria and a methodology developed by the Initiative Committees to specifically protect wildlife; incorporates recent data on the bioavailability of metals into the aquatic life criteria and methodologies; incorporates Great Lakes-specific data on fish consumption rates and fish lipid contents into the human health criteria; and provides a methodology to determine the bioaccumulation properties of individual pollutants. Additionally, EPA understands that the science of risk assessment is rapidly improving. Therefore, in order to ensure that the scientific basis for the criteria methodologies is always current and peer reviewed, EPA will review the methodologies and revise them as appropriate every three years.

B. Recognize the Unique Nature of the Great Lakes Basin Ecosystem

The final Guidance also reflects the unique nature of the Great Lakes Basin Ecosystem by establishing special provisions for chemicals of concern. EPA and the Great Lakes States believe it is reasonable and appropriate to establish special provisions for the chemicals of most concern because of the physical, chemical and biological characteristics of the Great Lakes System, and the documented environmental harm to the ecosystem from the past and continuing presence of these types of pollutants. The Initiative Committees devoted considerable effort to identifying the chemicals of most concern to the Great Lakes System—persistent, bioaccumulative pollutants termed ''bioaccumulative chemicals of concern (BCCs)''—and developing the most appropriate criteria, methodologies, policies, and procedures to address them. The special provisions for BCCs, initially developed by the Initiative Committees and incorporated into the final Guidance, include antidegradation procedures, to ensure that future problems are minimized; general phase-out and elimination of mixing zones for BCCs, except in limited circumstances, to reduce their overall loadings to the Lakes; more extensive data generation requirements to ensure that they are not under-regulated for lack of data; and development of water quality criteria that will protect wildlife that feed on aquatic prey.

The final Guidance is designed not only to begin to address existing problems, but also to prevent emerging and potential problems posed by additional chemicals in the future which may damage the overall health of the Great Lakes. The experience with such pollutants as DDT and PCBs indicates that it takes many decades to overcome the damage to the ecosystem caused by even short-term discharges, and that prevention would have been dramatically less costly than clean-up. Issuance of the final Guidance alone will not solve the existing long-term problems in the Great Lakes System from these contaminants. Full implementation of provisions consistent with the final Guidance will, however, provide a coordinated ecosystem approach for addressing possible pollutant problems before they produce adverse and long-lasting basin-wide impacts, rather than waiting to see what the future impacts of the pollutants might be before acting to control them. The comprehensive approach used in the development of the final Guidance provides regulatory authorities with both remedial and preventive ways of gauging the actions and potential effects of chemical stressors upon the Great Lakes Basin Ecosystem. The methodologies, policies and procedures contained in the final Guidance provide mechanisms for appropriately addressing both pollutants that have been or may in the future be documented as chemicals of concern.

C. Promote Consistency in Standards and Implementation Procedures While Allowing Appropriate Flexibility to States and Tribes

Promoting consistency in standards and implementation procedures while providing for appropriate State flexibility was the third principle in State and EPA development of the final Guidance. The underlying rationale for the Governors' Agreement, the Initiative, and the requirements set forth in the CPA was a recognition of the need to promote consistency through adoption of minimum water quality standards, antidegradation policies, and implementation procedures by Great Lakes States and Tribes to protect human health, aquatic life and wildlife. Although provisions in the CWA provide for the adoption of and periodic revisions to State water quality criteria, such provisions do not necessarily ensure that water quality criteria of adjoining States are consistent within a shared water body. For example, ambient water quality criteria in place in six of the eight Great Lakes States to protect aquatic life from acute effects range from 1.79 μg/L to 15.0 μg/L for cadmium, and from 0.21 μg/L to 1.33 μg/L for dieldrin. Other examples of variations in acute aquatic life criteria include nickel, which ranges from 290.30 μg/L to 852.669 μg/L; lindane,

with a range of no criteria in place to 1.32 μg/L; and mercury, ranging from 0.5 μg/L to 2.4 μg/L. Similar ranges and disparities exist for chronic aquatic life criteria, and for water quality criteria to protect human health.

Disparities also exist among State procedures to translate water quality criteria into individual discharge permits. Wide variations exist, for example, in procedures for the granting of mixing zones, interpretation of background levels of pollutants, consideration of pollutants present in intake waters, controls for pollutants present in concentrations below the level of detection, and determination of appropriate levels for pollutants discharged in mixtures with other pollutants. Additionally, when addressing the accumulation of chemicals by fish that will be consumed by humans and wildlife, some States consider accumulation through multiple steps in the food chain (bioaccumulation) while others consider only the single step of concentration from the water column (bioconcentration). Further disparities exist in different translator methodologies in deriving numeric values for implementing narrative water quality criteria; different assumptions when calculating total maximum daily loads (TMDLs) and wasteload allocations (WLAs), including different assumptions about background concentrations, mixing zones, receiving water flows, or environmental fate; and different practices in deciding what pollutants need to be regulated in a discharge, what effect detection limits have on compliance determinations, and how to develop whole effluent toxicity limitations.

These inconsistencies in State standards and implementation procedures have resulted in the disparate regulation of point source discharges. In the Governors' Agreement, the Governors recognized that the water resources of the basin transcend political boundaries and committed to taking steps to manage the Great Lakes as an integrated ecosystem. The Great Lakes States, as participants in the Initiative Committees, recommended provisions, based on their extensive experience in administering State water programs and knowledge of the significant differences in these programs within the basin, that were ultimately included in the proposed Guidance. The final Guidance incorporates the work begun by the Initiative Committees to identify these disparities and improve consistency in water quality standards and permit procedures in the Great Lakes System.

Although improved consistency in State water programs is a primary goal of the final Guidance, it is also necessary to provide appropriate flexibility to States and Tribes in the development and implementation of water programs. In overseeing States' implementation of the CWA, EPA has found that reasonable flexibility is not only necessary to accommodate site-specific situations and unforeseen circumstances, but is also appropriate to enable innovation and progress as new approaches and information become available. Many commenters, including the Great Lakes States, urged EPA to evaluate the appropriate level of flexibility provided to States and Tribes in the proposed Guidance provisions. EPA reviewed all sections of the proposed Guidance and all comments received to determine the appropriate level of flexibility needed to address these concerns while still providing a minimum level of consistency between the State and Tribal programs. Based on this review, the final Guidance provides flexibility for State and Tribal adoption and implementation of provisions consistent with the final Guidance in many areas, including the following:

—Antidegradation: Great Lakes States and Tribes may develop their own approaches for implementing the prohibition against deliberate actions of dischargers that increase the mass loading of BCCs without an approved antidegradation demonstration. Furthermore, States and Tribes have flexibility in adopting antidegradation provisions regarding non-BCCs.

—TMDLs: Great Lakes States and Tribes may use assessment and remediation plans for the purposes of appendix F to part 132 if the State or Tribe certifies that the assessment and remediation plan meets certain TMDL-related provisions in the final Guidance and public participation requirements applicable to TMDLs, and if EPA approves such plan. Thus, States have the flexibility in many cases to use LAMPs, RAPs and State Water Quality Management Plans in lieu of TMDLs.

—Intake Credits: Great Lakes States and Tribes may consider the presence of intake water pollutants in establishing water quality-based effluent limits (WQBELs) in accordance with procedure 5 of appendix F.

—Site-Specific Modifications: Great Lakes States and Tribes may adopt either more or less stringent modifications to human health, wildlife, and aquatic life criteria and bioaccumulation factors (BAFs) based on site-specific circumstances specified in procedure 1 of appendix F. All criteria, however, must be sufficient not to cause jeopardy to threatened or endangered species listed or proposed to be listed under the Federal Endangered Species Act.

—Variances: Great Lakes States and Tribes may grant variances from water quality standards based on the factors identified in procedure 2 of appendix F.

—Compliance Schedules: Great Lakes States and Tribes may allow existing Great Lakes dischargers additional time to comply with permit limits in order to collect data to derive new or revised Tier I criteria and Tier II values in accordance with procedure 9 of appendix F.

—Mixing Zones: Great Lakes States and Tribes may authorize mixing zones for existing discharges of BCCs after the 10-year phase-out period in accordance with procedure 3.B of appendix F, if the permitting authority determines, among other things, that the discharger has reduced its discharge of the BCC for which a mixing zone is sought to the maximum extent possible. Water conservation efforts that result in overall reductions of BCCs are also allowed even if they result in higher effluent concentrations.

—Scientific Defensibility Exclusion: Great Lakes States and Tribes may apply alternate procedures consistent with Federal, State, and Tribal requirements upon demonstration that a provision in the final Guidance would not be scientifically defensible if applied to a particular pollutant in one or more sites. This provision is in § 132.4(h) of the final Guidance.

—Reduced Detail: In many instances, EPA has revised the proposed Guidance to reduce the amount of detail in the provisions without sacrificing the objectives of the provisions. Examples of such revisions include simplification of procedures for developing TMDLs in procedure 3 of appendix F, and simplification of procedures for determining reasonable potential to exceed water quality standards in procedure 5.B of appendix F.

—Other Provisions: Flexibility is also present in provisions for the exercise of best professional judgment by the Great Lakes States and Tribes when implementing many individual provisions in the final Guidance including: determining the appropriate uncertainty factors in the human health and wildlife criteria methodologies; selection of data sets for establishing water quality criteria; identifying reasonable and prudent

measures in antidegradation provisions; and specifying appropriate margins of safety when developing TMDLs. In all cases, of course, State and Tribal provisions would need to be scientifically defensible and consistent with all applicable regulatory requirements.

D. Establish Equitable Strategies to Control Pollution Sources

Many commenters argued that the proposed Guidance unfairly focused on point source discharges. They asserted that nonpoint sources or diffuse sources of pollution, such as air emissions, are responsible for most of the loadings of some pollutants of concern in the Great Lakes, that increased regulation of point sources will be inequitable and expensive, and that the final Guidance will not result in any environmental improvement given the large, continuing contribution of toxic pollutants by nonpoint sources.

EPA recognizes that regulation of point source discharges alone cannot address all existing or future environmental problems from toxic pollutants in the Great Lakes. In addition to discharges from point sources, toxic pollutants are also contributed to the Great Lakes from industrial and municipal emissions to the air, resuspension of pollutants from contaminated sediments, urban and agricultural runoff, hazardous waste and Superfund sites, and spills. Restoration and maintenance of a healthy ecosystem will require significant efforts in all of these areas. EPA, Canada and the Great Lakes States and Tribes are currently implementing or developing many voluntary and regulatory programs to address these and other nonpoint sources of environmental contaminants in the Great Lakes.

Additionally, EPA intends to use the scientific data developed in the final Guidance and new or revised water quality criteria subsequently adopted by Great Lakes States and Tribes in evaluating and determining appropriate levels of control in other environmental programs. For example, EPA's future biennial reports under section 112(m) of the Clean Air Act will consider the extent to which air discharges cause or contribute to exceedances of water quality criteria in assessing whether additional air emission standards or control measures are necessary to prevent serious adverse effects. Similarly, once provisions consistent with the final Guidance are adopted by the Great Lakes States or Tribes, they will serve as applicable or relevant and appropriate requirements (ARARs) for on-site responses under the Comprehensive Environmental Response, Compensation and Liability Act (CERCLA). EPA will also consider the data and criteria developed for the final Guidance, including the information on BCCs, in developing or evaluating LaMPs and RAPs under section 118 of the CWA and Article VI, Annex 2 of the GLWQA; determination of corrective action requirements under sections 3004(u), 3008(h), or 7003 of the Solid Waste Disposal Act; new or existing chemical reviews under the Toxic Substances Control Act (TSCA); pesticide reviews under the Federal Insecticide, Fungicide and Rodenticide Act (FIFRA); and reporting requirements for toxic releases under the Emergency Planning and Community Right-to-Know Act (EPCRA).

The final Guidance also includes provisions to address the contribution of pollutants by nonpoint sources. First, the water quality criteria to protect human health, wildlife and aquatic life, and the antidegradation provisions apply to the waters in the Great Lakes System regardless of whether discharges to the water are from point or nonpoint sources. Accordingly, any regulatory programs for nonpoint sources that require compliance with water quality standards would also be subject to the criteria and antidegradation provisions of the final Guidance once they are adopted into State or Tribal standards.

Second, several elements of the final Guidance would, after State, Tribal or Federal promulgation, require or allow permitting authorities to consider the presence of pollutants in ambient waters—including pollutants from nonpoint source dischargers—in establishing WQBELs for point sources. For example, permit authorities may consider the presence of other point or nonpoint source discharges when evaluating whether to grant a variance from water quality criteria. Additionally, the provisions for TMDLs address nonpoint sources by specifying that the loading capacity of a receiving water that does not meet water quality standards for a particular pollutant be allocated, where appropriate, among nonpoint as well as point sources of the pollutant, including, at a minimum, a margin of safety to account for technical uncertainties in establishing the TMDL. The development of TMDLs is the preferred mechanism for addressing equitable division of the loading capacities of these nonattained waters. Because TMDLs have not been completed for most nonattained waters, however, the final Guidance promotes the development of TMDLs through a phased approach, where appropriate, and provides for short-term regulatory relief to point source dischargers in the absence of TMDLs through intake credits, variances, and other water quality permitting procedures.

EPA received numerous comments on the problem posed in controlling mercury in particular. Many commenters stated that since the primary source of mercury is now atmospheric deposition, point sources contribute only a minor portion of the total loading of mercury to the Great Lakes System and further restriction of point source discharges would have no apparent effect in improving water quality. Although EPA believes that there is sufficient flexibility in the Guidance to handle the unique problems posed by mercury (e.g., water quality variances, phased TMDLs, intake credits), EPA is committed to developing a mercury permitting strategy to provide a holistic, comprehensive approach for dealing with this pollutant. EPA will publish this strategy no later than two years following publication of this Guidance.

There are also many ongoing voluntary and regulatory activities that address nonpoint sources of toxic pollutants to the Great Lakes System, including activities taken under the Clean Air Act Amendments of 1990 (CAAA), the CWA, and State regulatory and voluntary programs. Some of these activities are summarized in the preamble to the proposed Guidance (58 FR 20826–32) and section I.D of the SID.

In addition to the many ongoing activities, EPA and the Great Lakes States, Tribes, and other federal agencies are pursuing a multi-media program to prevent and to further reduce toxic loadings from all sources of pollution to the Great Lakes System, with an emphasis on nonpoint sources. This second phase of the Great Lakes Water Quality Initiative, called the Great Lakes Toxic Reduction Effort (GLTRE), will build on the open, participative public dialogue established during the development of the final Guidance. Through the GLTRE, the Federal, State, and Tribal agencies intend to coordinate and enhance the effectiveness of ongoing actions and existing tools to prevent and reduce nonpoint source and wet-weather point source contributions of toxic pollutants in the Great Lakes System. A special emphasis will be placed on BCCs identified in the final Guidance.

A partial list of ongoing actions that are being or could be focused on BCCs includes: implementation of the CAAA to reduce atmospheric deposition of toxics; Resource Conservation and Recovery Act and CERCLA remedial actions to reduce loadings of toxics from

hazardous waste sites; increased focus (through the GLTRE) on toxic pollutants emanating from combined sewer overflows and stormwater outfalls; application in the Great Lakes basin of the National Contaminated Sediment Management Strategy; implementation of spill prevention planning practices to minimize this potential source of loadings to the Great Lakes; improved reporting of toxic pollutants under the Toxic Release Inventory; public education on the dangers of mercury and other BCCs; pesticide registration and re-registration processes; development of a ''mass balance'' model for fate and transport of pollutants in the Great Lakes; and, development of a ''virtual elimination strategy.'' These programs will prevent and further reduce mass loadings of pollutants and facilitate equitable division of the costs of any necessary control measures between point and nonpoint sources.

In addition to the GLTRE, which is basin-wide in scope, a primary vehicle for coordinating Federal and State programs at the local level for meeting water quality standards and restoring beneficial uses for the open waters of the Great Lakes are LaMPS. LaMPs will define media specific program actions to further reduce loadings of toxic substances, assess whether these programs will ensure restoration and attainment of water quality standards and designated beneficial uses, and recommend any media-specific program enhancements as necessary. Additionally, LaMPs will be periodically updated and revised to assess progress in implementing media-specific programs, assess the reductions in toxic loadings to the Great Lakes System through these programs, incorporate advances in the understanding of the System based on new data and information, and recommend specific adjustments to media programs as appropriate.

E. Promote Pollution Prevention Practices

The final Guidance also promotes pollution prevention practices consistent with EPA's National Pollution Prevention Strategy and the Pollution Prevention Action Plan for the Great Lakes. The Pollution Prevention Act of 1990 declares as National policy that reducing the sources of pollution is the preferred approach to environmental protection. When source reductions are not possible, however, recycling, treating and properly disposing of pollutants in an environmentally safe manner complete the hierarchy of management options designed to prevent pollution from entering the environment.

Consistent with the goals of the Pollution Prevention Act, EPA developed the Great Lakes Pollution Prevention Action Plan (April, 1991). The Great Lakes Pollution Prevention Action Plan highlights how EPA, in partnership with the States, will incorporate pollution prevention into actions designed to reduce the use and release of toxic substances in the Great Lakes basin.

The final Guidance builds upon these two components of the Great Lakes program by promoting the development of pollution prevention analysis and activities in the level of detection, mixing zone, and antidegradation sections of the final Guidance. Also, the decision to provide special provisions for BCCs implements EPA's commitment to pollution prevention by reducing the discharge of these pollutants in the future. This preventive step not only makes good environmental management sense, but is appropriate based on the documented adverse effects that the past and present discharge of these pollutants has produced in the Great Lakes basin.

F. Provide Accurate Assessment of Costs and Benefits

In developing the final Guidance, EPA identified and carefully evaluated the anticipated costs and benefits from implementation of the major provisions. EPA received many comments on the draft cost and benefit studies conducted as part of the proposed Regulatory Impact Analysis (RIA) required by Executive Order 12291, and its successor, Executive Order 12866. Based upon consideration of those comments and further analysis, EPA has revised the RIA. The results of this analysis are summarized in section V of this preamble.

IV. Summary of the Final Guidance

The final Guidance will establish minimum water quality standards, antidegradation policies, and implementation procedures for the waters of the Great Lakes System in the States of Illinois, Indiana, Michigan, Minnesota, New York, Pennsylvania, Ohio and Wisconsin, including waters within the jurisdiction of Indian Tribes. Specifically, the final Guidance specifies numeric criteria for selected pollutants to protect aquatic life, wildlife and human health within the Great Lakes System and provides methodologies to derive numeric criteria for additional pollutants discharged to these waters. The final Guidance also contains minimum procedures to translate the proposed ambient water quality criteria into enforceable controls on discharges of pollutants, and a final antidegradation policy.

The provisions of the final Guidance are not enforceable requirements until adopted by States or Tribes, or promulgated by EPA for a particular State or Tribe. The Great Lakes States and Tribes must adopt water quality standards, antidegradation policies, and implementation procedures for waters within the Great Lakes System consistent with the (as protective as) final Guidance or be subject to EPA promulgation. Great Lakes Tribes include any Tribe within the Great Lakes basin for which EPA has approved water quality standards under section 303 or has authorized to administer a NPDES program under section 402 of the CWA. No Indian Tribe has been authorized to administer these water programs in the Great Lakes basin as of this time. If a Great Lakes State fails to adopt provisions consistent with the final Guidance within two years of this publication in the **Federal Register** (that is, by March 23, 1997), EPA will publish a final rule at the end of that time period identifying the provisions of the final Guidance that will apply to waters and discharges within that jurisdiction. Additionally, when an Indian Tribe is authorized to administer the NPDES or water quality standards program in the Great Lakes basin, it will also need to adopt provisions consistent with the final Guidance into their water programs.

The following sections provide a brief summary of the provisions of the final Guidance. A more complete discussion of the final Guidance, including EPA's analysis of major comments, issues, and a description of specific changes made to the proposed Guidance, are contained in the SID.

The parenthetical note at the beginning of each section provides references to the primary provisions in the final Guidance being discussed in the section, and to discussions in the SID. The final Guidance is codified as 40 CFR 132, including appendixes A through F. Note that appendix F consists of procedures 1 through 9. For ease of reference, sections in appendix F may be referred to by appending the section designation to the procedure number. For example, section A.1 of procedure 1 may be referred to as procedure 1.A.1 of appendix F.

A. Water Quality Criteria and Methodologies

1. Protection of Aquatic Life

(§§ 132.3(a), 132.3(b), 132.4(a)(2); Tables 1 and 2 to part 132; appendix A to part 132; section III, SID)

The final Guidance contains numeric criteria to protect aquatic life for 15 pollutants, and a two-tiered methodology to derive criteria (Tier I) or values (Tier II) for additional pollutants discharged to the Great Lakes System. Aquatic life criteria are derived to establish ambient concentrations for pollutants, which, if not exceeded in the Great Lakes System, will protect fish, invertebrates, and other aquatic life from adverse effects due to that pollutant. The final Guidance includes both acute and chronic criteria to protect aquatic life from acute and chronic exposures to pollutants.

Tier I aquatic life criteria for each chemical are based on laboratory toxicity data for a variety of aquatic species (e.g., fish and invertebrates) which are representative of species in the freshwater aquatic environment as a whole. The Guidance also includes a Tier II methodology to be used in the absence of the full set of data needed to meet Tier I data requirements. For pollutants for which Tier I criteria have not been adopted into State or Tribal water quality standards, States must use methodologies consistent with either the Tier I or Tier II methodologies, depending on the data available, in conjunction with whole effluent toxicity requirements in the final Guidance (see section IV.B.5 of this preamble), to implement their existing narrative water quality criteria that prohibit toxic pollutants in toxic amounts in all waters. The Great Lakes States and Tribes are not required to use the Tier II methodology to adopt numeric criteria into their water quality standards.

Use of the two-tiered final Guidance methodologies in these situations will enable regulatory authorities to translate narrative criteria to derive TMDLs and individual NPDES permit limits on a more uniform basis. EPA and the States determined that there is a need to regulate pollutants more consistently in the Great Lakes System when faced with limited numbers of criteria. Many of the Great Lakes States are already employing procedures similar to the approach in the final Guidance to implement narrative criteria. EPA determined the Tier II approach improves upon existing mechanisms by utilizing all available data.

The two-tiered methodology allows the application of the final Guidance to all pollutants, except those listed in Table 5 of part 132 (see section IV.E of this preamble). The Tier I aquatic life methodology includes data requirements very similar to those used in current guidelines for developing National water quality criteria guidance under section 304(a) of the CWA. For example, both require that acceptable toxicity data for aquatic species in at least eight different families representing differing habitats and taxonomic groups must exist before a Tier I numeric criterion can be derived. The Tier II aquatic life methodology is used to derive Tier II values which can be calculated with fewer toxicity data than Tier I. Tier II values can, in certain instances, be based on toxicity data from a single taxonomic family, provided the data are acceptable. The Tier II methodology generally produces more stringent values than the Tier I methodology, to reflect greater uncertainty in the absence of additional toxicity data. As more data become available, the derived Tier II values tend to become less conservative. That is, they more closely approximate Tier I numeric criteria. EPA and the States believe it is desirable to continue to supplement toxicity data to ultimately derive Tier I numeric criteria.

One difference from the existing National water quality criteria guidelines is that the final Guidance methodology for aquatic life deletes the provision in the National guidelines to use a Final Residue Value (FRV) in deriving a criterion. The FRV is intended to prevent concentrations of pollutants in commercially or recreationally important aquatic species from affecting the marketability of those species or affecting wildlife that consume them by preventing the exceedance of applicable Food and Drug Administration action levels and concentrations that affect wildlife. The final Guidance provides specific, separate methodologies to protect wildlife and human health (discussed below) which EPA believes will provide more accurate and appropriate levels of protection than the FRVs.

For pollutants without Tier I criteria but with enough data to derive Tier II values for aquatic life, the proposal would have required permittees to meet permit limits based on both Tier II values and whole effluent toxicity (WET) testing. In response to comments, the final Guidance clarifies that States and Tribes may adopt provisions allowing use of indicator parameter limits consistent with 40 CFR 122.44(d)(1)(vi)(C). When deriving limits to meet narrative criteria, States and Tribes have the option of using an indicator parameter limit, including use of a WET limit under appropriate conditions, in lieu of a Tier II-based limit. If use of an indicator parameter is allowed, the State or Tribe must ensure that the indicator parameter will attain the ''applicable water quality standard'' (as described in 40 CFR 122.44(d)(1)(vi)(C). The ''applicable water quality standard'' in this instance would be the State's or Tribe's narrative water quality standard that protects aquatic life.

Finally, the aquatic criteria for metals in the proposed Guidance were expressed as total recoverable concentrations. The final Guidance expresses the criteria for metals in dissolved form because the dissolved metal more closely approximates the bioavailable fraction of metal in the water column than does the total recoverable metal. The dissolved criteria are obtained by multiplying the chronic and/or acute criterion by appropriate conversion factors in Table 1 or 2. This is consistent with many comments on the issue and with the policy on metals detailed in ''Office of Water Policy and Technical Guidance on Interpretation and Implementation of Aquatic Life Metals Criteria'' (October 1, 1993). A document describing the methodology to convert total recoverable metals criteria to dissolved metals criteria was published in the **Federal Register** on August 30, 1994 (59 FR 44678). If a State or Tribe fails to adopt approvable aquatic life criteria for metals, EPA will promulgate criteria expressed as dissolved concentrations.

EPA Region 5, in cooperation with EPA Regions 2 and 3 and Headquarters offices, and the Great Lakes States and Tribes, will establish a Great Lakes Initiative (GLI) Clearinghouse to assist States and Tribes in developing numeric Tier I water quality criteria for aquatic life, human health and wildlife and Tier II water quality values for aquatic life and human health. As additional toxicological data and exposure data become available or additional Tier I numeric criteria and Tier II values are calculated by EPA, States, or Tribes, Region 5 will ensure that this information is disseminated to the Great Lakes States and Tribes. EPA believes operation of the GLI Clearinghouse will help ensure consistency during implementation of the final Guidance.

2. Protection of Human Health

(§§ 132.3(c), 132.4(a)(4); Table 3 to part 132; appendix C to part 132; section V of the SID)

The final Guidance contains numeric human health criteria for 18 pollutants, and includes Tier I and Tier II methodologies to derive cancer and

non-cancer human health criteria for additional pollutants. The proposed Guidance contained numeric criteria for 20 pollutants, but two pollutants were deleted because they do not meet the more restrictive minimum data requirements for BAFs used in the final Guidance.

Tier I human health criteria are derived to establish ambient concentrations of chemicals which, if not exceeded in the Great Lakes System, will protect individuals from adverse health impacts from that chemical due to consumption of aquatic organisms and water, including incidental water consumption related to recreational activities in the Great Lakes System. For each chemical, chronic criteria are derived to reflect long-term consumption of food and water from the Great Lakes System. Tier II values are intended to provide a conservative, interim level of protection in the establishment of a permit limit, and are distinguished from the Tier I approach by the amount and quality of data used for derivation.

The final Guidance differs from current National water quality criteria guidelines when calculating the assumed human exposure through consumption of aquatic organisms. The final Guidance uses BAFs predicted from biota-sediment accumulation factors (BSAFs) in addition to field-measured BAFs, and uses a food chain multiplier (FCM) to account for biomagnification when using measured or predicted bioconcentration factors (BCFs). BAFs are discussed further in section IV.A.4. of this preamble.

Human health water quality criteria for carcinogens are typically expressed in concentrations associated with a plausible upper bound of increased risk of developing cancer. In practice, the level of cancer risk generally accepted by EPA and the States typically ranges between 10^{-4} (one in one thousand) and 10^{-6} (one in one million). In contrast, as discussed in section II above, the cancer risk from ingestion of contaminated fish at current concentrations in the Great Lakes System are as high as 1.2×10^{-2} (1.2 in 100). The proposed and final Guidance establishes 10^{-5} (one in one hundred thousand) as the risk level used for deriving criteria and values for individual carcinogens. This is within the range historically used in EPA actions, and approved for State actions, designed to protect human health. The majority of the Great Lakes States use 10^{-5} as a baseline risk level in establishing their water quality standards.

The methodology is designed to protect humans who drink water or consume fish from the Great Lakes System. The portion of the methodology addressing fish consumption includes a factor describing how much fish humans consume per day. The final Guidance includes a Great Lakes-specific fish consumption rate of 15 grams per day, based upon several fish consumption surveys from the Great Lakes, including a recent study by West *et al.* that was discussed in a **Federal Register** document on August 30, 1994 (59 FR 44678). This rate differs from the 6.5 grams per day rate which is used in the National water quality criteria guidelines as a National average consumption value. The 15 grams per day represents the mean consumption rate of regional fish caught and consumed by the Great Lakes sport fishing population.

Commenters argued that a 15 gram per day assumption in the methodology would not adequately protect populations that consume greater than this amount (e.g., low-income minority anglers and Native Americans), and that such an approach therefore would be inconsistent with Executive Order 12898 regarding environmental justice (February 16, 1994, 59 FR 7629). EPA believes that the human health criteria methodology, including the fish consumption rate, will provide adequate health protection for the public, including more highly exposed sub-populations. In carrying out regulatory actions under a variety of statutory authorities, including the CWA, EPA has generally viewed an upper bound incremental cancer risk in the range of 10^{-4} to 10^{-6} as adequately protective of public health. As discussed above, the human health criteria methodology is based on a risk level of 10^{-5}. Therefore, if fish are contaminated at the level permitted by criteria derived under the final Guidance, individuals eating up to 10 times (i.e., 150 grams per day) the assumed fish consumption rate would still be protected at the 10^{-4} risk level. Available data indicate that, even among low-income minorities who as a group consume more fish than the population on average, the overwhelming majority (approximately 95 percent) consume less than 150 grams per day. The final Guidance requires, moreover, that States and Tribes modify the human health criteria on a site-specific basis to provide additional protection appropriate for highly exposed sub-populations. Thus, where a State or Tribe finds that a population of high-end consumers would not be adequately protected by criteria derived using the 15 gram per day assumption (e.g., where the risk was greater than 10^{-4}), the State or Tribe would be required to modify the criteria to provide appropriate additional protection. The final Guidance also requires States and Tribes to adopt provisions to protect human health from the potential adverse effects of mixtures of pollutants in effluents, specifically including mixtures of carcinogens. Understood in the larger context of the human health methodology and the final Guidance as a whole, therefore, EPA believes that the 15 gram per day fish consumption rate provides adequate health protection for the public, including highly exposed populations, and that the final Guidance is therefore consistent with Executive Order 12898.

In developing bioaccumulation factors, the proposed Guidance used a 5.0 percent lipid value for fish consumed by humans, based on Great Lakes-specific data. The current National methodology uses a 3.0 percent lipid value. The final Guidance uses a 3.10 percent lipid value for trophic level 4 fish and 1.82 for trophic level 3 fish. These percent lipid values are based on an analysis of the West *et al.* study cited above and data from State fish contaminant monitoring programs.

The final Guidance contains specific technical guidelines concerning the range of uncertainty factors that may be applied by the State and Tribal agencies on the basis of their best professional judgment. The final Guidance places a cap of 30,000 on the combined product of uncertainty factors that may be applied in the derivation of non-cancer Tier II values and a combined uncertainty factor of 10,000 for Tier I criteria. The likely maximum combined uncertainty factor for Tier I criteria in most cases is 3,000. The SID discusses further the use of the uncertainty factors in the derivation of human health criteria and values.

The proposed Guidance used an 80 percent relative source contribution (RSC) from surface water pathways for BCCs, and a 100 percent RSC for all other pollutants, in deriving noncancer criteria. The RSC concept is applied in the National drinking water regulations and is intended to account, at least in part, for exposures from other sources for those bioaccumulative pollutants for which surface water pathways are likely to be major contributors to human exposure. The final Guidance uses the more protective 80 percent RSC for all pollutants in deriving noncancer criteria. This change was made because of concern that for non-BCCs as well as

BCCs, there may be other sources of exposures for noncarcinogens.

3. Protection of Wildlife

(§§ 132.3(d), 132.4(a)(5); Table 4 to part 132; appendix D to part 132; section VI of the SID)

The final Guidance contains numeric criteria to protect wildlife for four pollutants and a methodology to derive Tier I criteria for additional BCCs. Wildlife criteria are derived to establish ambient concentrations of chemicals which, if not exceeded, will protect mammals and birds from adverse impacts from that chemical due to consumption of food and/or water from the Great Lakes System.

These are EPA's first water quality criteria specifically for the protection of wildlife. The methodology is based largely on the noncancer human health paradigm. It focuses, however, on endpoints related to reproduction and population survival rather than the survival of individual members of a species. The methodology incorporates pollutant-specific effect data for a variety of mammals and birds and species-specific exposure parameters for two mammals and three birds representative of mammals and birds resident in the Great Lakes basin which are likely to experience significant exposure to bioaccumulative contaminants through the aquatic food web.

In the proposal, EPA included a two-tiered approach similar to that for aquatic life and human health. In response to comments, the final Guidance requires States and Tribes to adopt provisions consistent with only the Tier I wildlife methodology, and only to apply this methodology for BCCs (see section IV.A.4 below). The TSD provides discretionary guidelines for the use of Tier I and Tier II methodologies for other pollutants. The wildlife methodology was limited to the BCCs because these are the chemicals of greatest concern to the higher trophic level wildlife species feeding from the aquatic food web in the Great Lakes basin. This decision is consistent with comments made by the EPA Science Advisory Board (SAB) who agreed that the initial focus for wildlife criteria development should be on persistent, bioaccumulative organic contaminants (USEPA, 1994, EPA-SAB-EPEC-ADV–94–001).

Numerous commenters were concerned that the mercury criterion for wildlife was not scientifically appropriate. After review of all comments and a reevaluation of all the data, the mercury criterion for wildlife has been increased from 180 pg/L to 1300 pg/L. EPA believes the 1300 pg/L is protective of wildlife in the Great Lakes System.

In developing bioaccumulation factors, the proposed Guidance used a 7.9 percent lipid value for fish consumed by wildlife. The final Guidance uses a 10.31 percent lipid value for trophic level 4 fish and 6.46 for trophic level 3 fish. These percent lipid values are based on the actual prey species consumed by the representative wildlife species specified in the methodology, and are used to estimate the BAFs for the trophic levels which those species consume. The percent lipid is based on the preferential consumption patterns of wildlife and cross-referenced with fish weight and size and appropriate percent lipid. This approach is a more accurate reflection of the lipid content of the fish consumed by wildlife species than the approach used in the proposal.

4. Bioaccumulation Methodology

(§ 132.4(a)(3); appendix B to part 132; section IV of the SID)

The proposed Guidance incorporated BAFs in the derivation of criteria and values to protect human health and wildlife. Bioaccumulation refers to the uptake and retention of a substance by an aquatic organism from its surrounding medium and from food. For certain chemicals, uptake through the aquatic food chain is the most important route of exposure for wildlife and humans. The wildlife criteria and the human health criteria and values incorporate appropriate BAFs in order to more accurately account for the total exposure to a chemical. Current EPA guidelines for the derivation of human health water quality criteria use BCFs, which measure only uptake from water, when field-measured BAFs are not available. EPA believes, however, that the BAF is a better predictor of the concentration of a chemical within fish tissues in the Great Lakes System because it includes consideration of the uptake of contaminants from all routes of exposure.

The proposed Guidance included a hierarchy of three methods for deriving BAFs for non-polar organic chemicals: field-measured BAFs; predicted BAFs derived by multiplying a laboratory-measured BCF by a food-chain multiplier; and BAFs predicted by multiplying a BCF calculated from the log K_{ow} by a food-chain multiplier. For inorganic chemicals, the proposal would have required either a field-measured BAF or laboratory-measured BCF. On August 30, 1994, EPA published a document in the **Federal Register** (59 FR 44678) requesting comments on revising the hierarchy of methods for deriving BAFs for organic chemicals, and issues pertaining to the model used to assist in predicting BAFs when a field-measured BAF is not available. Based on the comments received, the final Guidance modifies the proposed hierarchy by adding a predicted BAF based on a BSAF as the second method in the hierarchy. BSAFs may be used for predicting BAFs from concentrations of chemicals in surface sediments. In addition, the final Guidance uses a model to assist in predicting BAFs that includes both benthic and pelagic food chains thereby incorporating exposures of organisms to chemicals from both the sediment and the water column. The model used in the proposal only included the pelagic food chain, and therefore, did not account for exposure to aquatic organisms from sediment.

The proposed Guidance used the total concentration of a chemical in the ambient water when deriving BAFs for organic chemicals. In the preamble to the proposed Guidance and in the **Federal Register** document cited above, EPA requested comments on deriving BAFs in terms of the freely dissolved concentration of the chemical in the ambient water. Based on comments received from the proposal and the document, the final Guidance uses the freely dissolved concentration of a chemical instead of the total concentration in the derivation of BAFs for organic chemicals. Use of the freely dissolved concentration will improve the accuracy of extrapolations between water bodies.

Finally, as discussed in section II of this preamble, bioaccumulation of persistent pollutants is a serious environmental threat to the Great Lakes Basin Ecosystem. Because of these concerns, the proposed Guidance would have required that pollutants with human health BAFs greater than 1000 receive increased attention and more stringent controls within the Great Lakes System. These pollutants are termed BCCs. EPA identified 28 BCCs in the proposed Guidance. The additional controls for BCCs are specified in certain of the implementation procedures and the antidegradation procedures, and are discussed further in the SID. The final Guidance continues to include increased attention on and more stringent controls for BCCs within the Great Lakes System. The final Guidance identifies 22 BCCs that are targeted for special controls instead of the 28 in the proposed Guidance. Six BCCs were deleted from the proposed list because of concern that the methods used to estimate the BAFs may not

account for the metabolism or degradation of the pollutants in the environment. States and Tribes may identify more BCCs as additional BAF data become available. The final Guidance designates as BCCs only those chemicals with human health BAFs greater than 1000 that were derived from either a field-measured BAF or a predicted BAF based on a field-measured BSAF (for non-metals) or from a field-measured BAF or a laboratory-measured BCF (for metals). Field-measured BAFs and BSAFs, unlike BAFs based only on laboratory analyses or calculations, account for the effects of metabolism.

B. Implementation Procedures

(§§ 132.4(a)(7), 132.4(e); appendix F to part 132; section VIII of the SID)

This section of the preamble discusses nine specific procedures contained in the final Guidance for implementing water quality standards and developing NPDES permits to attain the standards.

1. Site-Specific Modifications

(Procedure 1 of appendix F to part 132; section VIII.A of the SID)

The proposed Guidance would have allowed States and Tribes to adopt site-specific modifications to water quality criteria and values under certain circumstances. States and Tribes could modify aquatic life criteria to be either more stringent or less stringent when local water quality characteristics altered the biological availability or toxicity of a pollutant, or where local species' sensitivities differed from tested species. Less stringent modifications to chronic aquatic life criteria could also be made to reflect local physical and hydrological conditions. States and Tribes could also modify BAFs and human health and wildlife criteria to be more stringent, but not less stringent than the final Guidance.

The final Guidance retains most of the above provisions, but in addition allows less stringent modifications to acute aquatic life criteria and values to reflect local physical and hydrological conditions, less stringent modifications to BAFs in developing human health and wildlife criteria, and the use of fish consumption rates lower than 15 grams per day if justified. The final Guidance also specifies that site-specific modifications must be made to prevent water quality that would cause jeopardy to endangered or threatened species that are listed or proposed under the ESA, and prohibits any less-stringent site-specific modifications that would cause such jeopardy. Other issues related to the ESA are discussed in section IX of this preamble.

2. Variances from Water Quality Standards for Point Sources

(Procedure 2 of appendix F to part 132; section VIII.B of the SID)

The final Guidance allows Great Lakes States and Tribes to adopt variances from water quality standards, applicable to individual existing Great Lakes dischargers for up to five years, where specified conditions exist. For example, a variance may be granted when compliance with a criterion would result in substantial and widespread social and economic impacts or where certain stream conditions prevent the attainment of the criterion. No significant changes were made in this section from the proposed Guidance.

3. TMDLs and Mixing Zones

(Procedure 3 of appendix F to part 132; section VIII.C of the SID)

Section 303(d) of the CWA and implementing regulations at 40 CFR 130.7 require the establishment of TMDLs for waters not attaining water quality standards after implementation of existing or planned pollution controls. The TMDL quantifies the maximum allowable loading of a pollutant to a water body and allocates the loading capacity to contributing point and nonpoint sources (including natural background) such that water quality standards for that pollutant will be attained. A TMDL must incorporate a margin of safety (MOS) that accounts for uncertainty about the relationship between pollutant loads and water quality. TMDLs may involve single point sources or multiple sources (e.g., point sources and nonpoint sources) and may be established for geographic areas that range in size from large watersheds to relatively small water body segments.

The proposal attempted to develop a single, consistent approach for developing TMDLs to be used by all States and Tribes in the Great Lakes System. Current practice in the eight Great Lakes States includes distinct technical procedures and program approaches that differ in scale, emphasis, scope and level of detail. Two options for TMDL development were proposed. One, Option A, focused on first evaluating the basin as a whole and then conducting individual site-by-site adjustments as necessary to ensure attainment of water quality standards at each location in the basin. The other, Option B, focused on evaluating limits needed for individual point sources with supplemental emphasis on basin-wide considerations as necessary. Both approaches are consistent with the CWA, but result in different methodologies for TMDL development.

Both options proposed that within 10 years of the effective date of the final Guidance (i.e., two five-year NPDES permit terms), mixing zones would be prohibited for BCCs for existing point source discharges to the Great Lakes System. Further, both proposed that mixing zones be denied for new point source discharges of BCCs as of the effective date of the final Guidance. Both options also specified procedures for determining background levels of pollutants present in ambient waters. In addition, the proposal would have tightened the relationship between TMDL development and NPDES permit issuance by providing that TMDLs be established for each pollutant causing an impairment in a water body prior to the issuance or reissuance of any NPDES permits for that pollutant.

The final Guidance merges both Options A and B into one single set of minimum regulatory requirements for TMDL development. In general, the final TMDL procedures are less detailed than the proposal, and offer more flexibility for States and Tribes in establishing TMDLs. The final TMDL procedures contain elements from both Options A and B that were deemed critical for a minimum level of consistency among the Great Lakes States and Tribes. These critical elements include: mixing zone specifications, design flows, and procedures for determining background concentrations.

The final Guidance also includes a prohibition on mixing zones for BCCs after 12 years in most circumstances. Maintaining these restrictions on the availability of mixing zones is consistent with both the Steering Committee's policy views and the bi-national GLWQA goal of virtual elimination of persistent, bioaccumulative toxics. Because of the unique nature of the Great Lakes ecosystem, documented ecological impacts, and the need for consistency, EPA believes that the general prohibition on mixing zones for BCCs is reasonable and appropriate. However, a new exception is allowed if a facility with an existing BCC discharge can demonstrate that it is reducing that discharge to the maximum extent feasible (considering technical and economic factors) but cannot meet WQBELs for that discharge without a mixing zone. EPA, in conjunction with stakeholders within the Great Lakes Basin, will develop guidance for use by

States and Tribes in exercising the exception provision with special focus on the technical and economic feasibility criteria. This guidance will also consider the notice, public hearing, monitoring and pollution prevention demonstration elements of the exception criteria.

The final Guidance also retains many of the proposed provisions for calculating background concentrations used in TMDLs and WLAs established in the absence of TMDLs. The procedure addressing data points below the level of detection, however, has been modified so that it no longer specifies the use of default values (i.e., half of the level of detection).

The final TMDL procedures do not require that TMDLs be established for point sources prior to the issuance/reissuance of NPDES permits. The final Guidance defers to the existing National program for determining when a TMDL is required. Lastly, the final Guidance allows assessment and remediation plans that are approved by EPA under 40 CFR 130.6 to be used in lieu of a TMDL for purposes of appendix F as long as they meet the general conditions of a TMDL as outlined by procedure 3 of appendix F, and the public participation requirements applicable to TMDLs.

4. Additivity

(Procedure 4 of appendix F to part 132; section VIII.D of the SID)

EPA has traditionally developed numeric water quality criteria on a single pollutant basis. While some potential environmental hazards involve significant exposure to only a single compound, most instances of contamination in surface waters involve mixtures of two or more pollutants. The individual pollutants in such mixtures can act or interact in various ways which may affect the magnitude and nature of risks or effects on human health, aquatic life and wildlife. WET tests are available to generally address interactive effects of mixtures on aquatic organisms. EPA's 1986 ''Guidelines for the Health Risk Assessment of Chemical Mixtures'' set forth principles and procedures for human health risk assessment of chemical mixtures. There are currently no technical guidelines on how to assess effects on wildlife from chemical mixtures.

The preamble for the proposed Guidance discussed several possible approaches to address additive effects from multiple pollutants. Proposed regulatory language was provided for two specific options, each with separate provisions related to aquatic life, wildlife and human health. One approach was developed by the Initiative Committees, modified to delete the application of toxicity equivalency factors (TEFs) for PCBs to wildlife. The other approach was developed by EPA. Neither approach addressed the possible toxicologic interactions between pollutants in a mixture (e.g., synergism or antagonism) because of the limited data available on these interactive effects. In the absence of contrary data, both approaches recommended that the risk to human health from individual carcinogens in a mixture be considered additive, and that a 10^{-5} risk level be adopted as a cap for the cancer risk associated with mixtures. Both approaches also proposed using TEFs to assess the risk to humans and wildlife from certain chemical classes. The TEF approach converts the concentration of individual components in a mixture of chemicals to an ''equivalent'' concentration expressed in terms of a reference chemical. Both approaches used the 17 TEFs for dioxins and furans identified in the 1989 EPA document, ''Estimating Risks Associated with Exposures to Mixtures of Chlorinated Dibenzo-p-Dioxins and -Dibenzofurans,'' and the 1989 update.

The final Guidance includes a general requirement for States and Tribes to adopt an additivity provision consistent with procedure 4 of appendix F to protect human health from the potential additive adverse effects from both the noncarcinogenic and carcinogenic components of chemical mixtures in effluents. The final Guidance also requires the use of the 17 TEFs included in the proposed Guidance to protect human health from the potential additive adverse effects in effluents.

5. Determining the Need for WQBELs (Reasonable Potential)

(Procedure 5 of appendix F to part 132; section VIII.E of the SID)

EPA's existing regulations require NPDES permits to include WQBELs to control all pollutants or pollutant parameters which the permitting authority determines are or may be discharged at a level which will cause, have the reasonable potential to cause or contribute to an excursion of any applicable water quality standard. If the permitting authority determines that a discharge has the reasonable potential to cause or contribute to an excursion of an applicable numeric water quality criterion, it must include a WQBEL for the individual pollutant in the permit. In the absence of an adopted numeric water quality criterion for an individual pollutant, the permitting authority must derive appropriate WQBELs from the State or Tribal narrative water quality criterion by either calculating a numeric criterion for the pollutant; applying EPA's water quality criteria developed under section 304(a) of the CWA, supplemented with other information where necessary; or establishing effluent limitations on an indicator pollutant. See 40 CFR 122.44(d)(1).

The final Guidance implements these National requirements by specifying procedures for determining whether a discharge has the reasonable potential to cause or contribute to an exceedance of Tier I criteria or Tier II values based on facility-specific effluent data. The final Guidance also specifies procedures for determining whether permitting authorities must generate or require permittees to generate data sufficient to calculate Tier II values when specified pollutants of concern in the Great Lakes System are known or suspected of being discharged, but neither Tier I criteria nor Tier II values have been derived due to a lack of toxicological data. EPA believes that the data necessary to calculate Tier II values for aquatic life, wildlife and human health currently exists for most of the specified pollutants of concern.

The final Guidance maintains all the basic requirements from the proposed procedure. Some minor changes are that the procedure no longer includes a special provision for effluent dominated streams, and the procedure allows a broader range of statistical approaches to be used when evaluating effluent data, which provides added simplicity and flexibility to States and Tribes.

Another change from the proposal is the relationship in the final Guidance between the reasonable potential and TMDL procedures. Numerous commenters pointed out that the proposed Guidance indicated that TMDLs would be required for any water receiving effluent from a discharger found to exhibit reasonable potential. Given the fact that there are many waterbodies in the Great Lakes basin for which TMDLs have not been developed, and the obvious need for permitting to proceed in the interim until TMDLs are completed, the final Guidance provides that the permitting authority can establish waste load allocations and WQBELs in the absence of a TMDL or an assessment and remediation plan developed and approved in accordance with procedure 3.A of appendix F. A more detailed discussion of the assessment and remediation plan and its relationship to a TMDL can be found in section VIII.C.2 of the SID. Procedures for establishing such WLAs are therefore addressed in the final Guidance.

6. Intake Pollutants

(Procedures 5.D and 5.E of appendix F to part 132; section VIII.E of the SID)

The proposed Guidance allowed a permitting authority to determine that the return of an identified intake water pollutant to the same body of water under specified circumstances does not cause, have the reasonable potential to cause, or contribute to an excursion above water quality standards, and therefore, that a WQBEL would not be required for that pollutant. Under the proposal, this ''pass through'' of intake water pollutants would be allowed if the facility returns the intake water containing the pollutant of concern to the same waterbody; does not contribute additional mass of pollutant; does not increase the concentration of the intake water pollutant; and does not discharge at a time or location, or alter the pollutant in a manner which would cause adverse impacts to occur that would not occur if the pollutant were left in-stream.

EPA received numerous comments on the proposal. Some commenters argued that the proposed provision was too narrow because relief would not be available if the facility added any amount of the pollutant to the discharge, even where the facility was not contributing any additional mass or concentration to the waterbody than was contained in the intake water. After consideration of public comments, EPA decided to expand the intake pollutant provisions to include not only a reasonable potential procedure like the one contained in the proposal, but also a provision that allows the permitting authority to take into account the presence of pollutants in intake water in deriving WQBELs. Specifically, the final Guidance authorizes the permitting authority to establish limits based on a principle of ''no net addition'' (i.e., the limit would allow the mass and concentration of the pollutant in the discharge up to the mass and concentration of the pollutant in the intake water). This provision would be available where the facility's discharge is to the same body of water as the intake water, and could be applied for up to 12 years after publication of the final Guidance. After that time, if a TMDL or comparable plan that meets the requirements of procedure 3 of appendix F has not been completed, the facility's WQBEL must be established in accordance with the ''baseline'' provisions in procedure 5.F.2 of appendix F. This time limit provides a period of relief for dischargers that are not causing increased impacts on the waterbody by virtue of their discharge that would not have occurred had the pollutant remained in-stream, while maintaining the incentive for development of a comprehensive assessment and remediation plan for achieving attainment of water quality standards, which EPA believes is a critical element of the final Guidance for addressing pollutants for which a large contributor to non-attainment is nonpoint source pollution.

The final Guidance allows States and Tribes to address intake pollutants in a manner consistent with assessment and remediation plans that have been developed through mechanisms other than TMDLs in order to provide flexibility where such plans comprehensively address the point and non-point sources of non-attainment in a waterbody and the means for attaining compliance with standards.

EPA believes that 12 years provides sufficient time for States to develop and complete the water quality assessments that would serve as the basis for establishing effluent limits (including ''no net addition'' limits, where appropriate) under procedure 3.A of appendix F. However, EPA also recognizes that unforeseen events could delay State completion of these assessments, and therefore will, at 7 years following promulgation, in consultation with the States, evaluate the progress of the assessments. If this evaluation shows that completion of the assessments may not be accomplished by the 12 year date, EPA will revisit these provisions, and consider proposing extensions if appropriate.

Under the final Guidance, the permitting authority can permit the discharge of intake pollutants to a different body of water that is in non-attainment provided limitations require the discharge to meet a WQBEL for the pollutant equal to the pollutant's water quality criterion. Because inter-waterbody transfers of pollutants introduce pollutants to the receiving water that would not be present in that waterbody in the absence of the facility's discharge, EPA does not believe that relief for such pollutants comparable to the ''no net addition'' approach would be appropriate. However, to address the concern raised by commenters about facilities with multiple sources of intake water, the permitting authority may use a flow-weighted combination of these approaches when the facility has co-mingled sources of intake water from the same and different bodies of water.

EPA maintains that the preferred approach to deal with non-attainment waters, particularly when multiple sources contribute a pollutant for which the receiving water exceeds the applicable criterion, is development of a TMDL or comparable assessment and remediation plan. The above ''no net addition'' permitting approach provides additional flexibility in situations where a TMDL or comparable plan has not yet been developed. Other existing relief mechanisms include variances to water quality standards, removal of non-existing uses, and site-specific criteria.

7. WET

(Procedure 6 of appendix F to part 132; section VIII.F of the SID)

Existing EPA regulations define WET as ''the aggregate toxic effect of an effluent measured directly by a toxicity test.'' These regulations require WET limits to be included in permits in most circumstances in which the WET of a discharge has the reasonable potential to cause or contribute to an in-stream excursion above either a State's numeric criteria for toxicity or narrative criteria for water quality (40 CFR 122.2, 122.44(d)(1)). The regulations allow States and Tribes the flexibility to control for WET with either numeric or narrative criteria. Current technical guidelines recommend that no discharge should exceed 0.3 acute toxic units (TUa = 100/LC50) at the edge of an acute mixing zone and 1.0 chronic toxic units (TUc = 100/NOEC, the No Observed Effect Concentration) at the edge of a chronic mixing zone.

The proposed Guidance would have continued to allow States and Tribes the flexibility to choose to control WET with either numeric or narrative criteria, but specified that no discharge could exceed 1.0 TU_a at the point of discharge (i.e., no acute mixing zones) and 1.0 TU_c at the edge of a chronic mixing zone (with some exceptions). In addition, the proposal contained minimum requirements for appropriate test methods to measure WET and for permit conditions, and procedures for determining whether or not limits for WET are necessary.

The final Guidance differs principally from the proposal in requiring States and Tribes to adopt 0.3 TU_a and 1.0 TU_c either as numeric criteria or as an equivalent numeric interpretation of narrative criteria. The final Guidance also allows the use of acute mixing zones for the application of the acute criterion. This approach will promote consistency among States and Tribes in controlling WET, while still permitting considerable flexibility regarding implementation measures, consistent with current National policies and guidelines.

8. Loading Limits

(Procedure 9 of appendix F to part 132; section VIII.G of the SID)

The final Guidance provides that WQBELs be expressed in terms of both concentration and mass loading rate, except for those pollutants that cannot appropriately be expressed in terms of mass. These provisions clarify the application of existing Federal regulations at 40 CFR 122.45(f), and are consistent with current EPA guidance which requires the inclusion of any limits determined necessary based on best professional judgment to meet water quality standards, including, where appropriate, mass loading rate limits. They are also consistent with the antidegradation policy for the Great Lakes System in appendix E of the final Guidance.

9. Levels of Quantification

(Procedure 8 of appendix F to part 132; section VIII.H of the SID)

Many of the pollutants of concern in the Great Lakes System cause unacceptable toxic effects at very low concentrations. This results in instances where WQBELs are below levels of reliable quantification. When this occurs, the permitting authority may not be able to determine whether the pollutant concentration is above or below the WQBEL. The final Guidance requires adoption of pollutant minimization programs (PMPs) for such permits to increase the likelihood that the concentration of the pollutant is as close to the effluent limit as possible. The PMP is an ongoing, iterative process that requires, among other things, internal wastestream monitoring and submission of status reports. The use of PMPs for facilities with pollutants below the level of quantification is consistent with existing EPA guidance.

Unlike the proposal, however, the final Guidance eliminates additional minimum requirements for BCCs. For example, the final Guidance recommends but does not require bio-uptake studies that had been proposed to assess impacts to the receiving water and evaluate the effectiveness of the PMP.

10. Compliance Schedules

(Procedure 9 of appendix F to part 132; section VIII.I of the SID)

The final Guidance includes a procedure that allows Great Lakes States and Tribes to include schedules of compliance in permits for existing Great Lakes dischargers for effluent limitations based on new water quality criteria and certain other requirements. Generally, compliance schedules may provide for up to five years to comply with the effluent limitation in question and may, in specified cases, allow the compliance schedule to go beyond the term of the permit. Existing Great Lakes dischargers are those whose construction commenced before March 23, 1997. Thus the term, existing Great Lakes discharges, covers expanding dischargers who were ineligible for compliance schedules under the proposal. The final Guidance also provides the opportunity for States and Tribes to allow dischargers additional time to comply with effluent limitations based on Tier II values while conducting studies to justify modifications of those limitations.

C. Antidegradation Provisions

(§ 132.4(a)(6); appendix E to part 132; section VII of the SID)

EPA's existing regulations, at 40 CFR 131.6, establish an antidegradation policy as one of the minimum requirements of an acceptable water quality standards submittal. Section 131.12 describes the required elements of an antidegradation policy. These are: protection of water quality necessary to maintain existing uses, protection of high quality waters (those where water quality exceeds levels necessary to support propagation of fish, shellfish, and wildlife and recreation in and on the waters) and protection of water quality in those water bodies identified as outstanding National resources.

The proposed Guidance provided detailed procedures for implementing antidegradation that were not part of the existing regulations. The detailed implementation procedures were intended to result in greater consistency in how antidegradation was applied throughout the Great Lakes System. The proposed Guidance specified, among other things, how high quality waters should be identified, what activities should and should not require review under antidegradation, and the information necessary to support a request to lower water quality and the procedures to be followed by a Tribe or State in making a decision whether or not to allow a lowering of water quality.

The final Guidance maintains the overall structure of the proposed Guidance while allowing Tribes and States greater flexibility in how antidegradation is implemented. As in the proposal, the final Guidance is composed of an antidegradation standard, antidegradation implementation procedures, antidegradation demonstration and antidegradation decision. However, many of the detailed requirements found in the proposed Guidance appear in the SID accompanying the final Guidance as nonbinding guidelines, including provisions specific to non-BCCs.

Key elements of the proposed Guidance that are retained in the final Guidance for BCCs include: identification of high quality waters on a pollutant-by-pollutant basis; requirements for States and Tribes to adopt an antidegradation standard consistent with the final Guidance for BCCs; minimum requirements for conducting an antidegradation review of any activity expected to result in a significant lowering of water quality due to BCCs, minimum requirements for notifying permitting authorities of increases in discharges of BCCs; and, minimum requirements for an antidegradation demonstration consisting of a pollution prevention analysis, an alternative treatment analysis and a showing that the significant lowering of water quality will allow for important social and economic development. Significant changes from the proposed Guidance include: encouraging, but not requiring, States and Tribes to adopt provisions consistent with the antidegradation standard and implementation procedures for non-BCCs; replacement of numeric existing effluent quality-based (EEQ) limits as a means of implementing antidegradation for BCCs with a narrative description of the types of activities that will trigger an antidegradation review; and greater flexibility in the implementation, demonstration and decision components. A detailed discussion of the basis for each of the changes is provided in Section VII the SID.

D. Regulatory Requirements

(Part 132; Tables 5 and 6 to part 132; section II of the SID)

The Great Lakes States must adopt water quality standards, anti-degradation policies, and implementation procedures for waters within the Great Lakes System which are consistent with the final Guidance within two years of this publication. If a Great Lakes State fails to adopt such standards, policies, and procedures, section 118(c)(2)(C) of the CWA requires EPA to promulgate them not later than the end of that two-year period. Additionally, when an Indian Tribe is authorized to administer the NPDES or water quality standards program in the Great Lakes basin, it will also need to adopt provisions consistent with the final Guidance into its water program.

Part 132 establishes requirements and procedures to implement section 118(c)(2)(C). Sections 132.3 and 132.4

require Great Lakes States and Tribes to adopt criteria, methodologies, policies, and procedures consistent with the criteria, methodologies, policies, and procedures contained in part 132—that is, the definitions in § 132.2, the numeric criteria in Tables 1 through 4, the criteria development methodologies in appendixes A through D, the antidegradation policy in appendix E, and the implementation procedures in appendix F. Section 132.5 specifies the procedures for States and Tribes to make their submissions to EPA, and for EPA to approve or disapprove the submissions. The section specifies that in reviewing submissions, EPA will consider provisions of State and Tribal submissions to be ''consistent with'' the final Guidance if each provision is as protective as the corresponding provision of the final Guidance. If a State or Tribe fails to make a submission, or if provisions of the submission are not consistent with the final Guidance, § 132.5 provides that EPA will publish a final rule in the **Federal Register** identifying the final Guidance provisions that will apply to discharges within the particular State or Federal Indian Reservation.

Section 132.4 specifies that water quality criteria adopted by States and Tribes consistent with the final Guidance will apply to all waters of the Great Lakes System, regardless of designated uses of the waters in most cases, with some variations in human health criteria depending on whether the waters are designated for drinking water use. Section 132.4 also contains certain exceptions in applying the final Guidance methodologies and procedures. First, States and Tribes do not have to adopt and apply the final Guidance methodologies and procedures for the 14 pollutants listed in Table 5 of part 132. EPA believes that some or all of the methodologies and procedures are not scientifically appropriate for these pollutants. Second, if a State or Tribe demonstrates that the final Guidance methodologies or procedures are not scientifically defensible for a particular pollutant, the State or Tribe may use alternate methodologies or procedures so long as they meet all applicable Federal, State, and Tribal laws. Third, § 132.4 specifies that for wet-weather point sources, States and Tribes generally do not have to adopt and apply the final Guidance implementation procedures. The exception is the TMDL general condition for wet weather events. Fourth, pursuant to section 510 of the CWA, part 132 specifies that nothing in the final Guidance prohibits States or Tribes from adopting provisions more stringent than the final Guidance.

As discussed further in section IX of this preamble, § 132.4 also provides that State and Tribal submissions will need to include any provisions that EPA determines, based on EPA's authorities under the CWA and the results of consultation with the U.S. Fish and Wildlife Service (FWS) under section 7 of the ESA, are necessary to ensure that water quality is not likely to cause jeopardy to any endangered or threatened species listed under the ESA.

Part 132 extends the requirements of section 118(c)(2)(C) to Indian Tribes within the Great Lakes basin for which EPA has approved water quality standards under section 303 of the CWA or which EPA has authorized to administer an NPDES program under section 402 of the CWA. EPA believes that inclusion of Great Lakes Tribes in this way is necessary and appropriate to be consistent with section 518 of the CWA. The reasons for EPA's proposal are discussed further in the preamble to the proposed Guidance (58 FR 20834), and section II.D.3 of the SID. As a practical matter, no Great Lakes Tribes currently have approved water quality standards or authorized NPDES programs, so the submission requirements of part 132 do not apply to any Great Lakes Tribes. Tribes that are approved or authorized in the future, however, will need to adopt provisions consistent with the final Guidance in their water programs.

V. Costs, Cost-Effectiveness and Benefits

(Section IX of the SID)

Under Executive Order 12866 (58 FR 51735, October 4, 1993), EPA must determine whether the regulatory action is ''significant'' and therefore subject to Office of Management and Budget (OMB) review and the requirements of the Executive Order. The Order defines ''significant regulatory action'' as one that is likely to result in a rule that may:

(1) Have an annual effect on the economy of $100 million or more or adversely affect in a material way the economy, a sector of the economy, competition, jobs, the environment, public health or safety, or State, local, or Tribal governments or communities;

(2) Create a serious inconsistency or otherwise interfere with an action taken or planned by another agency;

(3) Materially alter the budgetary impact of entitlements, grants, user fees, or loan programs or the rights and obligations of recipients thereof; or

(4) Raise novel legal or policy issues arising out of legal mandates, the President's priorities, or the principles set forth in the Executive Order.

Pursuant to the terms of Executive Order 12866, it has been determined that this rule is a ''significant regulatory action'' because it raises novel policy issues arising out of the development of a comprehensive ecosystem-based approach for a large geographic area involving several States, Tribal governments, local governments, and a large number of regulated dischargers. This approach, including the Great Lakes Water Quality Initiative which developed the core concepts of the final Guidance, is a unique and precedential approach to the implementation of environmental programs. As such, this action was submitted to OMB for review pursuant to Executive Order 12866. Changes made in response to OMB suggestions or recommendations will be documented in the public record.

The following is a summary of major elements of the ''Regulatory Impact Analysis of the Final Great Lakes Water Quality Guidance'' (RIA) (EPA 820–B–95–011) that has been prepared in compliance with Executive Order 12866. Further discussion is included in section IX of the SID, and in the full RIA, which is available in the docket for this rulemaking.

The provisions of the final Guidance are not enforceable requirements until adopted by States or Tribes, or promulgated by EPA for a particular State or Tribe. Therefore, this publication of the final Guidance does not have an immediate effect on dischargers. Until actions are taken to promulgate and implement these provisions (or equally protective provisions consistent with the final Guidance), there will be no economic effect on any dischargers. For the purposes of the RIA, EPA's analysis of costs and benefits assumes that either State or EPA promulgations occur consistent with the final Guidance within the next two years.

Under the CWA, costs cannot be a basis for adopting water quality criteria that will not be protective of designated uses. If a range of scientifically defensible criteria that are protective can be identified, however, costs may be considered in selecting a particular criterion within that range. Costs may also be relevant under the antidegradation standard as applied to high quality waters.

EPA has assessed compliance costs for facilities that could be affected by provisions adopted by States or Tribes consistent with the final Guidance. EPA has also assessed basin-wide risk reduction benefits to sport anglers and Native American subsistence anglers in the basin, and benefits for three case study sites in the Great Lakes System.

The methodology used in each assessment and the results of these assessments are discussed below.

EPA solicited public comment and supporting data on the RIA methodology used to estimate both costs and benefits for implementation of the proposed Guidance. EPA evaluated these comments and supporting data as well as comments provided by OMB and revised the RIA methodology prior to performing these assessments for the final Guidance.

A. Costs

Based on the information provided by each State and a review of the permit files, EPA identified about 3,800 direct dischargers that could be affected by State or Tribal adoption or subsequent EPA promulgation, if necessary, of requirements consistent with the final Guidance. Of these, about 590 are major dischargers and the remaining 3,210 are minor dischargers. Of the 590 majors, about 275 are industrial facilities and 315 are publicly owned treatment works (POTWs). Out of these dischargers, EPA used a stratified random sampling procedure to select 59 facilities (50 major and nine minor) that it considered representative of all types and sizes of facilities in the basin.

EPA divided the major facilities into nine industrial categories and a category for POTWs. The nine industrial categories are: mining, food and food products, pulp and paper, inorganic chemical manufacturing, organic chemical manufacturing/petroleum refining, metals manufacturing, electroplating/metal fabrication, steam electric power plants, and miscellaneous facilities.

For each major and minor facility in the sample, EPA estimated incremental costs to comply with subsequently promulgated provisions consistent with the final Guidance, using a baseline of compliance with the requirements of section 303(c)(2)(B) of the CWA. Using a decision matrix, costs were developed for two different scenarios—a ''low-end'' cost scenario and a ''high-end'' cost scenario—to account for the range of regulatory flexibility available to States and Tribes when adopting and implementing provisions consistent with the final Guidance. In addition, the decision matrix specified assumptions used for selection of control options in the cost analysis such as optimization of existing treatment processes and operations, in-plant pollutant minimization and prevention, and ''end of pipe'' effluent treatment.

The annualized costs for direct and indirect dischargers to implement the final Guidance are estimated to be between $60 million (low end) and $380 million (high end) (first quarter 1994 dollars). EPA believes the costs for implementing the final Guidance, which balance pollution prevention, ''end-of-pipe'' treatment and regulatory flexibility, will approach the low end of the cost range. Costs are unlikely to reach the high end of the cost range because State and Tribal authorities are likely to choose implementation options that provide some degree of relief to point source dischargers, especially because in many cases the nonpoint source contributions will be significant. Furthermore, cost estimates for both scenarios, but especially for the high-end scenario, may be overstated because in cases where the final Guidance provides States and Tribes flexibility in selecting less costly approaches when implementing provisions consistent with the final Guidance, the most costly approach was used to estimate the costs. This approach was used to reduce uncertainty in the cost analysis for the final Guidance.

Under the low-end cost scenario, major industrial facilities and POTWs would account for about 65 percent of the costs, indirect dischargers about 33 percent, and minor dischargers about two percent. Among the major dischargers three categories would account for most of the costs—POTWs (39 percent), pulp and paper (14 percent), and miscellaneous (eight percent). The average per plant costs for different industry categories range from zero to $168,000. The two highest average cost categories are pulp and paper ($151,000) and miscellaneous ($168,000). Although major POTWs make up a large portion of the total cost, the average cost per plant under the low-end scenario is not among the highest at $75,000 per facility. About half of the low-end costs are associated with pollution prevention activities, and about half are for capital and operating costs for wastewater treatment.

For the high-end cost scenario, direct dischargers account for 98 percent of the total estimated cost, and indirect dischargers account for two percent. This shift in proportion of costs between direct and indirect dischargers and between the low and the high estimates are due to the assumption that more direct dischargers will need to use end-of-pipe treatment under the high-end scenario. In addition, it was assumed that a smaller proportion of indirect dischargers (10 percent) would be impacted under the high-end scenario, since municipalities are adding end-of-pipe treatment which should reduce the need for source controls (i.e., reduce the need for increased pretreatment program efforts) by indirect discharges. Less than 10 percent of the high-end costs are associated with pollution prevention activities, and over 90 percent are for capital and operating costs for wastewater treatment.

Under the high-end scenario for the direct dischargers, municipal major dischargers are expected to incur just under 70 percent of total costs, and industrial major dischargers account for 29 percent of total costs. Minor direct dischargers are estimated to incur less than one percent of the total costs. The two major industrial categories with the largest total annualized cost are the pulp and paper (23 percent of total) and miscellaneous (three percent) categories. The food and food products and metal finishing categories are estimated to incur less than 1 percent of the total annualized cost.

Under the high-end scenario, the average annual cost per major municipal facility is just over $822,000 per facility. Average annualized costs for industrial majors vary widely across categories, with the highest average cost estimated for pulp and paper ($1,583,000 per plant) and miscellaneous ($433,700 per plant) categories. Regardless of the scenario, the average costs for minor facilities are negligible at an estimated $500 per facility.

The costs described above account for the costs of eliminating mixing zones for BCCs except in narrow circumstances, costs related to implementation of Tier II values, and specific calculated costs related to intake credits. The cost assessment also projects the potential cost savings across the different scenarios that facilities may realize if States or Tribes use existing regulatory relief mechanisms to modify or eliminate the need for a WQBEL for an identified pollutant (e.g., variances, TMDLs, site-specific modifications to criteria, and changes in designated uses).

In addition to the cost estimates described above, EPA estimated the cost to comply with requirements consistent with the antidegradation provisions of the final Guidance. This potential future cost is expressed as a ''lost opportunity'' cost for facilities impacted by the antidegradation requirements. This cost could result in the addition of about $22 million each year.

B. Cost-Effectiveness

EPA estimated the cost-effectiveness of the final Guidance in terms of the cost of reducing the loadings of toxic pollutants from point sources. The cost-effectiveness (cost per pound removed) is derived by dividing the annualized costs of implementing the final

Guidance by the toxicity-weighted pounds (pound-equivalents) of pollutants removed. Pound-equivalents are calculated by multiplying pounds of each pollutant removed by the toxic weight (based on the toxicity of copper) for that pollutant.

It is estimated that implementation of provisions consistent with the final Guidance would be responsible for the reduction of about six to eight million toxic pounds per year, or 16 to 22 percent of the toxic-weighted baseline for the low- and high-end scenarios, respectively. The cost-effectiveness of the scenarios, over the baseline, is quite good, ranging from $10 to $50 per pound-equivalent.

Approximately 80 percent of the pollutant load reduction from implementation of the final Guidance, regardless of the scenario, is attributable to reducing BCCs as a result of PMPs and end-of-pipe treatment. The largest pollutant load reductions occur for chlordane, dieldrin, heptachlor, lead, and pentachlorobenzene.

In a separate analysis, EPA also investigated the cost-effectiveness of regulating point and nonpoint sources of mercury and PCBs, two contaminants associated with fish advisories in the Great Lakes basin. Although data and resource constraints limited the findings from these analyses, the preliminary results indicate that point sources may factor cost-effectively into pollutant reduction scenarios. For both contaminants, the cost-effectiveness of point and nonpoint source controls are likely to be highly site-specific.

C. Benefits

The benefits analysis is intended to provide insight into both the types and potential magnitude of the economic benefits expected to arise as a result of implementation of provisions adopted by States and Tribes consistent with the final Guidance. To the extent feasible, empirical estimates of the potential magnitude of the benefits are developed and then compared to the estimated costs of implementing provisions adopted by States and Tribes consistent with the final Guidance.

The benefits analysis is based on a case study approach, using benefits transfer applied to three case studies. The case study approach was used because it is more amenable to meaningful benefit-cost analyses than are studies of larger aggregate areas. Although the results obtained for a case study site may not apply uniformly to the entire Great Lakes basin, the case study approach does provide a pragmatic and realistic perspective of how implementation of the final Guidance can generate benefits, the types of benefits anticipated, and how these benefits compare to costs.

The case studies include: (1) the lower Fox River drainage, including Green Bay, located on Lake Michigan in northeastern Wisconsin; (2) the Saginaw River and Saginaw Bay, located on Lake Huron in northeastern Michigan; and (3) the Black River, located on Lake Erie in north-central Ohio. The case studies were selected from a list of candidate sites (i.e., designated Areas of Concern (AOCs) in the Great Lakes basin) on the basis of data availability and the relevance of the water quality problems to the final Guidance (i.e., areas in which problems were more likely to be associated with on-going point source discharges rather than historic loadings from Superfund sites and other sources). Geographic diversity was also considered in selecting the sites so that the analyses might better promote a broad perspective of the final Guidance's benefits and costs.

For each of the three case studies, EPA estimated future toxics-oriented water quality benefits, and then attributed a percentage of these benefits to implementation of the final Guidance. The attribution of benefits was based only on the estimated reduction in loadings from point sources at the case study sites and information on the relative contribution of point sources to total loadings in the basin. EPA did not attempt to calculate the longer-term benefits to human health, wildlife, and aquatic life once the final Guidance provisions are fully implemented by nonpoint sources as well as point sources and the minimum protection levels are attained in the ambient water.

In the Fox River and Green Bay case study, total annual undiscounted benefits attributable to the final Guidance range from $0.3 million to $8.5 million (first quarter 1994 dollars). Human health benefits account for between 29 percent and 72 percent of the estimated benefits, recreational fishing accounts for between eight percent and 45 percent, and nonuse/ecologic benefits account for between nine percent and 23 percent. Municipal and industrial dischargers in this case study are estimated to incur annualized costs of about $3.6 million.

In the Saginaw River/Bay case study, total annual undiscounted benefits range from $0.2 million to $7.7 million. Recreational fishing benefits account for between 36 percent and 60 percent of the estimated benefits, non-use benefits account for between 18 percent and 30 percent, and human health benefits account for between eight percent and 36 percent. Total annualized costs to municipal and industrial dischargers are estimated to be about $2.6 million.

In the Black River case study, total annual undiscounted benefits range from $0.4 million to $1.5 million. Recreational fishing benefits account for between 48 percent and 63 percent of the estimated benefits, and nonuse benefits account for between 32 percent and 44 percent. Total annualized costs to municipal and industrial dischargers are estimated to be $2.1 million.

An inherent limitation of the case study approach is the inability to extrapolate from a limited set of river-based sites to the Great Lakes basin as a whole. Accordingly, extrapolation of the case study results to the Great Lakes basin is not recommended. However, as noted above, the three case studies were selected on the basis of data availability, the relative importance of point source discharges to the watersheds' problems, and an attempt to portray spatial diversity throughout the Great Lakes basin. Thus, there is no reason to conclude that the selected sites are not reflective of the basin, even though benefits (and costs) tend to be highly site-specific. In addition, the benefits extend from the case study rivers into the larger, open-water environment of the Great Lakes.

The representativeness of the case study sites was assessed by comparing the percentage of total benefits estimated to accrue in the case study areas to the percentage of basin-wide costs incurred by the case study sites. Benefits-related measures (such as population, recreational angling days, and nonconsumptive recreation days) were used in place of total benefits for this analysis because there is no estimate of benefits for the entire Great Lakes basin. The three case studies combine to account for nearly 14 percent of the total cost of the final Guidance, nearly 17 percent of the loadings reductions, and from four percent to 10 percent of the benefits proxies (i.e., basin-wide population, recreational angling, nonconsumptive recreation, and commercial fishery harvest). Thus, the three case studies may represent a reasonably proportionate share of costs and benefits.

In addition to the case study analyses, a basin-wide risk assessment was conducted for Great Lakes anglers. EPA collected data and information on the consumption of Great Lakes basin fish to estimate baseline risk levels and reductions in risks due to implementation of the final Guidance for two populations at risk: Great Lakes sport anglers (including minority and

low-income anglers) and Native Americans engaged in subsistence fishing in the basin. For sport anglers, EPA estimated that the projected reduction in loadings from point sources based on controls consistent with the final Guidance would result in a reduction of annual excess lifetime cancer cases (potential cancer cases assuming a 70-year lifetime exposure period) of 2.2 to 4.1 for low-income minorities in lakeshore counties; 0.4 to 0.8 for other minorities in lakeshore counties; and 21.9 to 41.9 for all other sport anglers. For Native American subsistence anglers, EPA estimated that reductions from point source loadings attributable to the final Guidance would result in a reduction of excess lifetime cancer cases of between 0.1 and 0.3 using a low fish ingestion scenario and 0.5 to 1.1 using a high fish ingestion scenario. Note that these estimates do not include the long-term benefits (including reduced cancer cases) that will result once the final Guidance provisions are fully implemented and the minimum protection levels are attained in the ambient water.

In total, using the most conservative consumption scenario for Native Americans, these reductions represent between 0.35 and 0.67 excess cancer cases per year, and potential basin-wide benefits of the final Guidance for this one benefits category of between $0.7 million and $6.7 million per year, based on the estimated value of a statistical life of between $2.0 million and $10.0 million. Comparison to case study results, which were based on a more comprehensive sample of facilities within case study areas than was possible for the entire basin, indicates these values likely underestimate the potential risk reduction benefits of the final Guidance at the basin level. For example, if the average percentage load reduction for PCBs for the three case studies is used to reflect reductions in PCBs for the basin, the reduction in excess cancer cases increases to between three and six cases per year, and potential benefits increase to between $6.6 and $60 million per year.

The reduction in pollutant loadings for PCBs was likely understated in the basin-wide analysis because the analysis did not count pollutant load reduction benefits when the current State-based permit limit and the final Guidance-based permit limit were both below the pollutant analytical method detection limit (MDL). Only three sample facilities in the population of 59 sample facilities used to project basin-wide costs and human health benefits had State-based permit limits for PCBs. Since the current State-based permit limit and the final Guidance-based permit limit were below the MDL in all three facilities, ''zero'' reduction in PCB loadings for the basin was estimated. This, of course, is an artifact of the methodology and the size of the sample population selected for the analysis, and would not occur, as demonstrated in the case study analysis, if a larger sample population had been used.

VI. Regulatory Flexibility Act

Under the Regulatory Flexibility Act (RFA), EPA generally is required to conduct a final regulatory flexibility analysis (FRFA) describing the impact of the regulatory action on small entities as part of the final rulemaking. However, under section 605(b) of the RFA, if EPA certifies that the rule will not have a significant economic impact on a substantial number of small entities, EPA is not required to prepare a FRFA.

Implementation of the final Guidance is dependent upon future promulgation of provisions consistent with it by State or Tribal agencies or, if necessary, EPA. Until actions are taken to promulgate and implement these provisions, or equally protective provisions consistent with the final Guidance, there will be no economic effect of this rule on any entities, large or small. For that reason, and pursuant to Section 605(b) of the RFA, EPA is certifying that this rule itself will not have a significant economic impact on a substantial number of small entities.

Although EPA is certifying that this rule will not have a significant economic impact on a substantial number of small entities, and therefore is not required to prepare a FRFA, it is nevertheless including for public information in the RIA a discussion of the possible economic effects to small entities that could result from State or Tribal adoption of provisions consistent with the final Guidance or subsequent EPA promulgation, if necessary. As discussed above, small facilities are projected to incur costs of only approximately $500 per facility to comply with subsequently promulgated requirements that are consistent with the final Guidance. Accordingly, EPA believes there will be no significant economic impact on a substantial number of small entities as a result of State or Tribal implementation of the final Guidance.

VII. Enhancing the Intergovernmental Partnership Under Executive Order 12875

In compliance with Executive Order 12875 (58 FR 58093, October 28, 1993), EPA has involved State, Tribal, and local governments in the development of the final Guidance.

As described in section II above, the core elements of the final Guidance were developed by the Great Lakes States, EPA, and other Federal agencies in open dialogue with citizens, local governments, and industries in the Great Lakes ecosystem over a five-year period through the Initiative. The Initiative process marks the first time that EPA has developed a major rulemaking effort in the water program through a regional public forum. The Initiative process is described further in the preamble to the proposed Guidance (58 FR 20820–23) and section II of this preamble.

In addition to the participation by State and local governments in the initial development of the proposed Guidance and in the public comment process, several activities have been carried out since the publication of the proposed Guidance. These include:

(1) On April 26, 1994, EPA held a public meeting to solicit additional information from interested parties on the proposed Guidance. As part of EPA's outreach efforts to State, Tribal and local governments, a special invitation was sent inviting elected officials and other State, Tribal and local representatives to participate in the public meeting. EPA specifically welcomed Tribal and local officials and opened the floor to them to hear and discuss their specific concerns and views on the final Guidance.

(2) A series of meetings and teleconferences were held with Great Lakes States in early 1994 to discuss their comments on several issues, including development of water quality criteria, State adoption requirements, WET, BAFs, additivity, compliance schedules, anti-backsliding, nonpoint sources, and international concerns.

(3) In October, 1994, EPA met with each individual State in the Great Lakes basin to discuss the nature, form, and scope of the proposed Guidance, and State concerns with implementation of the provisions under consideration. The following issues were discussed at each of the meetings: intake credits, antidegradation and EEQ, wildlife criteria, excluded pollutants (e.g., ammonia and chlorine), elimination of mixing zones, site-specific modifications, fish consumption, appropriate degrees of flexibility for implementation (e.g., guidance vs. regulation), and implementation procedures.

(4) In 1994 and 1995, EPA met with representatives of the National Wildlife Federation to discuss EPA's activities in developing the final Guidance in

accordance with the terms of a consent decree governing the schedule for development of the final Guidance.

(5) In 1994, EPA also met with elected officials and other representatives from several local communities in the Great Lakes basin to discuss issues regarding the economic impact of the proposed Guidance on local communities and POTWs. Issues discussed include cost impacts associated with implementing water quality criteria, methodologies, and implementation procedures; dealing with pollution from nonpoint sources; public outreach to control pollutants such as mercury instead of costly end-of-pipe treatment; and applicability of provisions in the final Guidance to the National water quality program.

(6) EPA held an additional 18 consultations with the regulated community throughout 1994. Such meetings allowed representatives of dischargers to share additional data, which has been placed in the docket for this rulemaking, and concerns about a range of issues, including cost concerns, that the dischargers expect to arise in implementation of the final Guidance.

(7) In 1994, EPA met with State representatives to conduct initial planning for implementation of the GLI Clearinghouse. All Great Lakes States agreed to participate in this effort, which will involve the sharing of toxicological and other data to assist in the development of additional water quality criteria and values.

The results of the above efforts have assisted in the development of the final Guidance through broad communication with a full range of interested parties, sharing of additional information, and incorporation of features to improve the implementation of the final Guidance.

EPA has estimated the total annual State government burden to implement the final Guidance as approximately 5,886 hours, resulting in a State government cost of $175,992 annually. Such burden and costs were estimated based upon the burden and costs associated with developing water quality criteria, review of antidegradation policy demonstrations, review of approvable control strategies and BCC monitoring data, and review of variance requests. The total annual local government burden is estimated to be 42,296 hours with an associated cost of $2,008,624. All of the burden and costs to local governments are associated with being a regulated entity as an operator of a POTW.

VIII. Paperwork Reduction Act

The information collection requirements in this final Guidance have been approved by OMB under the Paperwork Reduction Act, 44 U.S.C. 3501 *et seq.*, and have been assigned OMB control number 2040–0180. EPA has prepared an Information Collection Request (ICR) document (ICR No. 1639.02). A copy of ICR 1639.02 may be obtained by writing to Ms. Sandy Farmer, Information Policy Branch, EPA 2136, Washington, D.C. 20460, or by calling (202) 260–2740.

The annual public reporting and record keeping burden for this regulation is estimated to be 128,787 hours for the affected 3,795 permittees, or an average of 34 hours. This includes the total annual burden to local governments as POTW operators, estimated to be 45,296 hours. The total annual burden to State governments is estimated to be 5,886 hours. These estimates include time for reviewing instructions, searching existing data sources, gathering and maintaining the data needed, and completing and reviewing the collection of information.

Send comments regarding the burden estimate or any other aspect of this collection of information, including suggestions for reducing this burden to Chief, Information Policy Branch, Mail Code 2136, U.S. Environmental Protection Agency, 401 M St., S.W., Washington, DC 20460; and to the Office of Information and Regulatory Affairs, Office of Management and Budget, Washington, DC 20503.

In this rulemaking EPA is also amending the table of currently approved ICR control numbers issued by OMB for various regulations into 40 CFR 9.1. This amendment updates the table to accurately display those information requirements promulgated under the CWA. The affected regulations are codified at 40 CFR parts 122, 123, 131, and 132. EPA will continue to present OMB control numbers in a consolidated table format. The table will be codified in 40 CFR part 9 of EPA's regulations and in each 40 CFR volume containing EPA regulations. The table lists the section numbers with reporting and recordkeeping requirements, and the current OMB control numbers. This display of the OMB control numbers and their subsequent codification in the CFR satisfies the requirements of the Paperwork Reduction Act (44 U.S.C. 3501 *et seq.*) and OMB's implementing regulations at 5 CFR part 1320.

The ICR for this rulemaking was previously subject to public notice and comment prior to OMB approval. As a result, EPA finds that there is ''good cause'' under section 553(b)(B) of the Administrative Procedure Act (5 U.S.C. 553(b)(B)) to amend this table without prior notice and comment. Due to the technical nature of the table, further notice and comment would be unnecessary.

IX. Endangered Species Act

Pursuant to section 7(a)(2) of the ESA, EPA consulted with the FWS concerning EPA's publication of the final Guidance. EPA and the FWS have now completed both informal and formal consultation conducted over a two-year period.

As a result of the consultation, as well as an analysis of comments, EPA modified several provisions of the final Guidance. The procedure for site-specific modifications provides that Great Lakes States and Tribes must make site-specific modifications to criteria and values where necessary to ensure the resulting water quality does not cause jeopardy to listed or proposed species. Similarly, the antidegradation policy and implementation procedures restrict certain actions States and Tribes may take to allow lowering of water quality in high quality waters, or to adopt variances or mixing zones. Additionally, the regulatory requirements were modified to require Great Lakes States and Tribes to include in their part 132 submissions any provisions that EPA determines, based on EPA's authorities under the CWA and the results of consultation under section 7 of the ESA, are necessary to ensure that water quality is not likely to cause jeopardy to listed species. EPA and the FWS also agreed on how further consultations will be conducted as the final Guidance is implemented. The two agencies also agreed that EPA will undertake a review of water quality standards and implementation of those standards for ammonia and chlorine in the Great Lakes basin as part of EPA's responsibilities under section 303(c) of the CWA.

During the consultation, two issues were identified that required formal consultation, as defined in 40 CFR part 402. These issues were: the absence of toxicological data concerning effects of contaminants on three species of freshwater mussels in the Great Lakes basin, and the adequacy of the wildlife criteria methodology to protect three endangered or threatened wildlife species in the basin. On February 21, 1995, the FWS provided EPA with a written Biological Opinion (Opinion) on these issues. The Opinion is available in the docket for this rulemaking. On both issues, the FWS concluded that the water quality resulting from implementation of the final Guidance will not cause jeopardy to the listed species. To minimize the amount or extent of any incidental take that might

occur, the FWS consulted closely with EPA to develop a coordinated approach. The final Opinion specified reasonable and prudent measures that the FWS considers necessary or appropriate to minimize such impact. EPA has agreed to implement the measures, and the FWS and EPA will continue to work cooperatively during the implementation.

X. Judicial Review of Provisions Not Amended

In some situations, EPA has renumbered or included other editorial changes to regulations that have been promulgated in past rulemakings. Additionally, to provide for ease in reading changes to existing regulations, EPA has in some cases repeated entire sections, including portions not changed. The promulgation of this final rule, however, does not provide another opportunity to seek judicial review on the substance of the existing regulations.

XI. Supporting Documents

All documents that are referenced in this preamble are available for inspection and photocopying in the docket for this rulemaking at the address listed at the beginning of this preamble. A reasonable fee will be charged for photocopies.

Selected documents supporting the final Guidance are also available for viewing by the public at locations listed below:

Illinois: Illinois State Library, 300 South 2nd Street, Springfield, IL 62701 (217–785–5600)

Indiana: Indiana Department of Environmental Management, Office of Water Management, 100 North Senate Street, Indianapolis, IN 46204 (317–232–8671)

Michigan: Library of Michigan, Government Documents Service, 717 West Allegan, Lansing, MI 48909 (517–373–1300); Detroit Public Library, Sociology and Economics Department, 5201 Woodward Avenue, Detroit, MI 48902 (313–833–1440)

Minnesota: Minnesota Pollution Control Agency, Library, 520 Lafayette, St. Paul, MN (612–296–7719)

New York: U.S. EPA Region 2 Library, Room 402, 26 Federal Plaza, New York, NY 10278 (212–264–2881); U.S. EPA Public Information Office, Carborundum Center, Suite 530, 345 Third Street, Niagara Falls, NY 14303 (716–285–8842); New York State Department of Environmental Conservation (NYSDEC), Room 310, 50 Wolf Road, Albany, NY 12333 (518–457–7463); NYSDEC, Region 6, 7th Floor, State Office Building, 317 Washington Street, Watertown, NY 13602 (315–785–2513); NYSDEC, Region 7, 615 Erie Boulevard West, Syracuse, NY 13204 (315–426–7400); NYSDEC, Region 8, 6274 East Avon-Lima Road, Avon, NY 14414 (716–226–2466); NYSDEC, Region 9, 270 Michigan Avenue, Buffalo, NY 14203 (716–851–7070)

Ohio: Ohio Environmental Protection Agency Library—Central District Office, 1800 Watermark Road, Columbus, OH 43215 (614–644–3024); U.S. EPA Eastern District Office, 25809 Central Ridge Road, Westlake, OH 44145 (216–522–7260)

Pennsylvania: Pennsylvania Department of Environmental Resources, 230 Chestnut Street, Meadville, PA 16335 (814–332–6945); U.S. EPA Region 3 Library, 8th Floor, 841 Chestnut Building, Philadelphia, PA 19107–4431 (215–597–7904)

Wisconsin: Water Resources Center, University of Wisconsin-Madison, 2nd Floor, 1975 Willow Drive, Madison, WI (608–262–3069)

EPA is also making a number of documents available in electronic format at no incremental cost to users of the Internet. These documents include the contents of this **Federal Register** document, the SID, many documents listed below, and other supporting materials.

The documents listed below are also available for a fee upon written request or telephone call to the National Technical Information Center (NTIS), U.S. Department of Commerce, 5285 Port Royal Road, Springfield, VA 22161 (telephone 800–553–6847 or 703–487–4650). Alternatively, copies may be obtained for a fee upon written request or telephone call to the Educational Resources Information Center/Clearinghouse for Science, Mathematics, and Environmental Education (ERIC/CSMEE), 1200 Chambers Road, Room 310, Columbus, OH 43212 (614–292–6717). When ordering, please include the NTIS or ERIC/CSMEE accession number.

A. Final Water Quality Guidance for the Great Lakes System: Supplementary Information Document (SID). NTIS Number: PB95187266. ERIC Number: D046.

B. Great Lakes Water Quality Initiative Criteria Document for the Protection of Aquatic Life in Ambient Water. NTIS Number: PB95187282. ERIC Number: D048.

C. Great Lakes Water Quality Initiative Technical Support Document for the Procedure to Determine Bioaccumulation Factors. NTIS Number: PB95187290. ERIC Number: D049.

D. Great Lakes Water Quality Initiative Criteria Document for the Protection of Human Health. NTIS Number: PB95187308. ERIC Number: D050.

E. Great Lakes Water Quality Initiative Technical Support Document for Human Health Criteria and Values. NTIS Number: PB95187316. ERIC Number: D051.

F. Great Lakes Water Quality Initiative Criteria Document for the Protection of Wildlife: DDT; Mercury; 2,3,7,8–TCDD; PCBs. NTIS Number: PB95187324. ERIC Number: D052.

G. Great Lakes Water Quality Initiative Technical Support Document for Wildlife Criteria. NTIS Number: PB95187332. ERIC Number: D053.

H. Assessment of Compliance Costs Resulting from Implementation of the Final Great Lakes Water Quality Guidance. NTIS Number: PB95187340. ERIC Number: D054.

I. Regulatory Impact Analysis of the Final Great Lakes Water Quality Guidance. NTIS Number: PB95187357. ERIC Number: D055.

List of Subjects

40 CFR Part 9

Reporting and recordkeeping requirements.

40 CFR Part 122

Administrative practice and procedure, Confidential business information, Great Lakes, Hazardous substances, Reporting and recordkeeping requirements, Water pollution control.

40 CFR Part 123

Administrative practice and procedure, Confidential business information, Great Lakes, Hazardous substances, Indians-lands, Intergovernmental relations, Penalties, Reporting and recordkeeping requirements, Water pollution control.

40 CFR Part 131

Great Lakes, Reporting and recordkeeping requirements, Water pollution control.

40 CFR Part 132

Administrative practice and procedure, Great Lakes, Indians-lands, Intergovernmental relations, Reporting and recordkeeping requirements, Water pollution control.

Dated: March 13, 1995.

Carol M. Browner,

Administrator.

For the reasons set out in the preamble, title 40, chapter I, parts 9, 122, 123, and 131 are amended, and part 132 is added as follows:

PART 9—OMB APPROVALS UNDER THE PAPERWORK REDUCTION ACT

1. The authority citation for part 9 continues to read as follows:

Authority: 7 U.S.C. 135 *et seq.*, 136–136y; 15 U.S.C. 2001, 2003, 2005, 2006, 2601–2671; 21 U.S.C. 331j, 346a, 348; 31 U.S.C. 9701; 33 U.S.C. 1251 *et seq.*, 1311, 1313d, 1314, 1318, 1321, 1326, 1330, 1342, 1344, 1345 (d) and (e), 1361; E.O. 11735, 38 FR 21243, 3 CFR, 1971–1975 Comp. p. 973; 42 U.S.C. 241, 242b, 243, 246, 300f, 300g, 300g–1, 300g–2, 300g–3, 300g–4, 300g–5, 300g–6, 300j–1, 300j–2, 300j–3, 300j–4, 300j–9, 1857 *et seq.*, 6901–6992k, 7401–7671q, 7542, 9601–9657, 11023, 11048.

2. Section 9.1 is amended as follows:

a. By adding in numerical order the entry ''122.44(r)'' under the heading ''EPA Administered Permit Programs: The National Pollutant Discharge Elimination System''.

b. By revising the entries under the heading ''State Permit Requirements'';

c. By adding in numerical order the entries ''131.1'' and ''131.5'' and by revising the entries ''131.20'', ''131.21'' and ''131.22'' under the heading ''Water Quality Standards Regulations''; and

d. By adding in numerical order a new heading and new entries for ''Water Quality Guidance for the Great Lakes System'' to read as follows:

§ 9.1 OMB approvals under the Paperwork Reduction Act.

* * * * *

40 CFR citation	OMB control No.
EPA Administered Permit Programs: The National Pollutant Discharge Elimination System	
* * * * *	
122.44(r)	2040–0180
* * * * *	
State Permit Requirements	
123.21–123.24	2040–0057, 2040–0170
123.25	2040–0004, 2040–0110, 2040–0170, 2040–0180
123.26–123.29	2040–0057, 2040–0170
123.43	2040–0057, 2040–0170
123.44	2040–0057, 2040–0170, 2040–0180
123.45	2040–0057, 2040–0170
123.62	2040–0057, 2040–0170, 2040–0180
123.63	2040–0057, 2040–0170, 2040–0180
123.64	2040–0057, 2040–0170
Water Quality Standards Regulation	
131.1	2040–0180
131.5	2040–0180
* * * * *	
131.20	2040–0049
131.21	2040–0049, 2040–0180
131.22	2040–0049
* * * * *	
Water Quality Guidance for the Great Lakes System	
132.1	2040–0180
132.2	2040–0180
132.3	2040–0180
132.4	2040–0180
132.5	2040–0180
Appendix A	2040–0180
Appendix B	2040–0180
Appendix C	2040–0180
Appendix D	2040–0180
Appendix E	2040–0180
Appendix F	2040–0180

* * * * *

PART 122—EPA ADMINISTERED PERMIT PROGRAMS: THE NATIONAL POLLUTANT DISCHARGE ELIMINATION SYSTEM

3. The authority citation for part 122 continues to read as follows:

Authority: The Clean Water Act, 33 U.S.C. 1251 *et seq.*

4. Section 122.44 is amended by adding a new paragraph (r) to read as follows:

§ 122.44 Establishing limitations, standards, and other permit conditions (applicable to State NPDES programs, see § 123.25).

* * * * *

(r) Great Lakes. When a permit is issued to a facility that discharges into the Great Lakes System (as defined in 40 CFR 132.2), conditions promulgated by the State, Tribe, or EPA pursuant to 40 CFR part 132.

PART 123—STATE PROGRAM REQUIREMENTS

5. The authority citation for part 123 continues to read as follows:

Authority: Clean Water Act, 33 U.S.C. 1251 *et seq.*

6. Section 123.25 is amended by removing ''and'' at the end of paragraph (a)(36), removing the period at the end of paragraph (a)(37) and adding ''; and'' in its place, and adding a new paragraph (a)(38) to read as follows:

§ 123.25 Requirements for permitting.

(a) * * *

(38) For a Great Lakes State or Tribe (as defined in 40 CFR 132.2), 40 CFR part 132 (NPDES permitting implementation procedures only).

* * * * *

7. Section 123.44 is amended by adding a new paragraph (c)(9) to read as follows:

§ 123.44 EPA review of and objections to State permits.

* * * * *

(c) * * *

(9) For a permit issued by a Great Lakes State or Tribe (as defined in 40 CFR 132.2), the permit does not satisfy the conditions promulgated by the State, Tribe, or EPA pursuant to 40 CFR part 132.

* * * * *

8. Section 123.62 is amended by adding a new paragraph (f) to read as follows:

§ 123.62 Procedures for revision of State programs.

* * * * *

(f) Revision of a State program by a Great Lakes State or Tribe (as defined in 40 CFR 132.2) to conform to section 118 of the CWA and 40 CFR part 132 shall be accomplished pursuant to 40 CFR part 132.

9. Section 123.63 is amended by adding a new paragraph (a)(6) and adding and reserving paragraph (b) to read as follows:

§ 123.63 Criteria for withdrawal of State programs.

(a) * * *

(6) Where a Great Lakes State or Tribe (as defined in 40 CFR 132.2) fails to adequately incorporate the NPDES permitting implementation procedures promulgated by the State, Tribe, or EPA pursuant to 40 CFR part 132 into individual permits.

(b) [Reserved]

PART 131—WATER QUALITY STANDARDS

10. The authority citation for part 131 continues to read as follows:

Authority: 33 U.S.C. 1251 *et seq.*

11. Section 131.1 is revised to read as follows:

§ 131.1 Scope.

This part describes the requirements and procedures for developing, reviewing, revising, and approving water quality standards by the States as authorized by section 303(c) of the Clean Water Act. Additional specific procedures for developing, reviewing, revising, and approving water quality standards for Great Lakes States or Great Lakes Tribes (as defined in 40 CFR 132.2) to conform to section 118 of the

Clean Water Act and 40 CFR part 132, are provided in 40 CFR part 132.

12. Section 131.5 is amended by revising paragraph (a)(5), by redesignating paragraph (b) as paragraph (c), and by adding a new paragraph (b) to read as follows:

§ 131.5 EPA Authority.

(a) * * *

(5) Whether the State submission meets the requirements included in § 131.6 of this part and, for Great Lakes States or Great Lakes Tribes (as defined in 40 CFR 132.2) to conform to section 118 of the Act, the requirements of 40 CFR part 132.

(b) If EPA determines that the State's or Tribe's water quality standards are consistent with the factors listed in paragraphs (a)(1) through (a)(5) of this section, EPA approves the standards. EPA must disapprove the State's or Tribe's water quality standards and promulgate Federal standards under section 303(c)(4), and for Great Lakes States or Great Lakes Tribes under section 118(c)(2)(C) of the Act, if State or Tribal adopted standards are not consistent with the factors listed in paragraphs (a)(1) through (a)(5) of this section. EPA may also promulgate a new or revised standard when necessary to meet the requirements of the Act.

* * * * *

13. Section 131.21 is amended by revising paragraph (b) to read as follows:

§ 131.21 EPA review and approval of water quality standards.

* * * * *

(b) The Regional Administrator's approval or disapproval of a State water quality standard shall be based on the requirements of the Act as described in §§ 131.5 and 131.6, and, with respect to Great Lakes States or Tribes (as defined in 40 CFR 132.2), 40 CFR part 132.

* * * * *

14. Part 132 is added as follows:

PART 132—WATER QUALITY GUIDANCE FOR THE GREAT LAKES SYSTEM

Sec.

132.1 Scope, purpose, and availability of documents.
132.2 Definitions.
132.3 Adoption of criteria.
132.4 State adoption and application of methodologies, policies and procedures.
132.5 Procedures for adoption and EPA review.
132.6 Application of part 132 requirements in Great Lakes States and Tribes.
[Reserved]

Tables to Part 132

Appendix A to Part 132—Great Lakes Water Quality Initiative Methodologies for Development of Aquatic Life Criteria and Values
Appendix B to Part 132—Great Lakes Water Quality Initiative Methodology for Development of Bioaccumulation Factors
Appendix C to Part 132—Great Lakes Water Quality Initiative Methodology for Development of Human Health Criteria and Values
Appendix D to Part 132—Great Lakes Water Quality Initiative Methodology for the Development of Wildlife Criteria
Appendix E to Part 132—Great Lakes Water Quality Initiative Antidegradation Policy
Appendix F to Part 132—Great Lakes Water Quality Initiative Implementation Procedures

Authority: 33 U.S.C. 1251 *et seq.*

§ 132.1 Scope, purpose, and availability of documents.

(a) This part constitutes the Water Quality Guidance for the Great Lakes System (Guidance) required by section 118(c)(2) of the Clean Water Act (33 U.S.C. 1251 *et seq.*) as amended by the Great Lakes Critical Programs Act of 1990 (Pub. L. 101–596, 104 Stat. 3000 *et seq.*). The Guidance in this part identifies minimum water quality standards, antidegradation policies, and implementation procedures for the Great Lakes System to protect human health, aquatic life, and wildlife.

(b) The U.S. Environmental Protection Agency, Great Lakes States, and Great Lakes Tribes will use the Guidance in this part to evaluate the water quality programs of the States and Tribes to assure that they are protective of water quality. State and Tribal programs do not need to be identical to the Guidance in this part, but must contain provisions that are consistent with (as protective as) the Guidance in this part. The scientific, policy and legal basis for EPA's development of each section of the final Guidance in this part is set forth in the preamble, Supplementary Information Document, Technical Support Documents, and other supporting documents in the public docket. EPA will follow the guidance set out in these documents in reviewing the State and Tribal water quality programs in the Great Lakes for consistency with this part.

(c) The Great Lakes States and Tribes must adopt provisions consistent with the Guidance in this part applicable to waters in the Great Lakes System or be subject to EPA promulgation of its terms pursuant to this part.

(d) EPA understands that the science of risk assessment is rapidly improving. Therefore, to ensure that the scientific basis for the methodologies in appendices A through D are always current and peer reviewed, EPA will review the methodologies and revise them, as appropriate, every 3 years.

(e) Certain documents referenced in the appendixes to this part with a designation of NTIS and/or ERIC are available for a fee upon request to the National Technical Information Center (NTIS), U.S. Department of Commerce, 5285 Port Royal Road, Springfield, VA 22161. Alternatively, copies may be obtained for a fee upon request to the Educational Resources Information Center/Clearinghouse for Science, Mathematics, and Environmental Education (ERIC/CSMEE), 1200 Chambers Road, Room 310, Columbus, Ohio 43212. When ordering, please include the NTIS or ERIC/CSMEE accession number.

§ 132.2 Definitions.

The following definitions apply in this part. Terms not defined in this section have the meaning given by the Clean Water Act and EPA implementing regulations.

Acute-chronic ratio (ACR) is a standard measure of the acute toxicity of a material divided by an appropriate measure of the chronic toxicity of the same material under comparable conditions.

Acute toxicity is concurrent and delayed adverse effect(s) that results from an acute exposure and occurs within any short observation period which begins when the exposure begins, may extend beyond the exposure period, and usually does not constitute a substantial portion of the life span of the organism.

Adverse effect is any deleterious effect to organisms due to exposure to a substance. This includes effects which are or may become debilitating, harmful or toxic to the normal functions of the organism, but does not include non-harmful effects such as tissue discoloration alone or the induction of enzymes involved in the metabolism of the substance.

Bioaccumulation is the net accumulation of a substance by an organism as a result of uptake from all environmental sources.

Bioaccumulation factor (BAF) is the ratio (in L/kg) of a substance's concentration in tissue of an aquatic organism to its concentration in the ambient water, in situations where both the organism and its food are exposed and the ratio does not change substantially over time.

Bioaccumulative chemical of concern (BCC) is any chemical that has the potential to cause adverse effects which, upon entering the surface waters, by itself or as its toxic transformation

product, accumulates in aquatic organisms by a human health bioaccumulation factor greater than 1000, after considering metabolism and other physicochemical properties that might enhance or inhibit bioaccumulation, in accordance with the methodology in appendix B of this part. Chemicals with half-lives of less than eight weeks in the water column, sediment, and biota are not BCCs. The minimum BAF information needed to define an organic chemical as a BCC is either a field-measured BAF or a BAF derived using the BSAF methodology. The minimum BAF information needed to define an inorganic chemical, including an organometal, as a BCC is either a field-measured BAF or a laboratory-measured BCF. BCCs include, but are not limited to, the pollutants identified as BCCs in section A of Table 6 of this part.

Bioconcentration is the net accumulation of a substance by an aquatic organism as a result of uptake directly from the ambient water through gill membranes or other external body surfaces.

Bioconcentration factor (BCF) is the ratio (in L/kg) of a substance's concentration in tissue of an aquatic organism to its concentration in the ambient water, in situations where the organism is exposed through the water only and the ratio does not change substantially over time.

Biota-sediment accumulation factor (BSAF) is the ratio (in kg of organic carbon/kg of lipid) of a substance's lipid-normalized concentration in tissue of an aquatic organism to its organic carbon-normalized concentration in surface sediment, in situations where the ratio does not change substantially over time, both the organism and its food are exposed, and the surface sediment is representative of average surface sediment in the vicinity of the organism.

Carcinogen is a substance which causes an increased incidence of benign or malignant neoplasms, or substantially decreases the time to develop neoplasms, in animals or humans. The classification of carcinogens is discussed in section II.A of appendix C to part 132.

Chronic toxicity is concurrent and delayed adverse effect(s) that occurs only as a result of a chronic exposure.

Connecting channels of the Great Lakes are the Saint Mary's River, Saint Clair River, Detroit River, Niagara River, and Saint Lawrence River to the Canadian Border.

Criterion continuous concentration (CCC) is an estimate of the highest concentration of a material in the water column to which an aquatic community can be exposed indefinitely without resulting in an unacceptable effect.

Criterion maximum concentration (CMC) is an estimate of the highest concentration of a material in the water column to which an aquatic community can be exposed briefly without resulting in an unacceptable effect.

EC50 is a statistically or graphically estimated concentration that is expected to cause one or more specified effects in 50 percent of a group of organisms under specified conditions.

Endangered or threatened species are those species that are listed as endangered or threatened under section 4 of the Endangered Species Act.

Existing Great Lakes discharger is any building, structure, facility, or installation from which there is or may be a ''discharge of pollutants'' (as defined in 40 CFR 122.2) to the Great Lakes System, that is not a new Great Lakes discharger.

Federal Indian reservation, Indian reservation, or *reservation* means all land within the limits of any Indian reservation under the jurisdiction of the United States Government, notwithstanding the issuance of any patent, and including rights-of-way running through the reservation.

Final acute value (FAV) is (a) a calculated estimate of the concentration of a test material such that 95 percent of the genera (with which acceptable acute toxicity tests have been conducted on the material) have higher GMAVs, or (b) the SMAV of an important and/or critical species, if the SMAV is lower than the calculated estimate.

Final chronic value (FCV) is (a) a calculated estimate of the concentration of a test material such that 95 percent of the genera (with which acceptable chronic toxicity tests have been conducted on the material) have higher GMCVs, (b) the quotient of an FAV divided by an appropriate acute-chronic ratio, or (c) the SMCV of an important and/or critical species, if the SMCV is lower than the calculated estimate or the quotient, whichever is applicable.

Final plant value (FPV) is the lowest plant value that was obtained with an important aquatic plant species in an acceptable toxicity test for which the concentrations of the test material were measured and the adverse effect was biologically important.

Genus mean acute value (GMAV) is the geometric mean of the SMAVs for the genus.

Genus mean chronic value (GMCV) is the geometric mean of the SMCVs for the genus.

Great Lakes means Lake Ontario, Lake Erie, Lake Huron (including Lake St. Clair), Lake Michigan, and Lake Superior; and the connecting channels (Saint Mary's River, Saint Clair River, Detroit River, Niagara River, and Saint Lawrence River to the Canadian Border).

Great Lakes States and Great Lakes Tribes, or Great Lakes States and Tribes means the States of Illinois, Indiana, Michigan, Minnesota, New York, Ohio, Pennsylvania, and Wisconsin, and any Indian Tribe as defined in this part which is located in whole or in part within the drainage basin of the Great Lakes, and for which EPA has approved water quality standards under section 303 of the Clean Water Act or which EPA has authorized to administer an NPDES program under section 402 of the Clean Water Act.

Great Lakes System means all the streams, rivers, lakes and other bodies of water within the drainage basin of the Great Lakes within the United States.

Human cancer criterion (HCC) is a Human Cancer Value (HCV) for a pollutant that meets the minimum data requirements for Tier I specified in appendix C of this part.

Human cancer value (HCV) is the maximum ambient water concentration of a substance at which a lifetime of exposure from either: drinking the water, consuming fish from the water, and water-related recreation activities; or consuming fish from the water, and water-related recreation activities, will represent a plausible upper-bound risk of contracting cancer of one in 100,000 using the exposure assumptions specified in the Methodologies for the Development of Human Health Criteria and Values in appendix C of this part.

Human noncancer criterion (HNC) is a Human Noncancer Value (HNV) for a pollutant that meets the minimum data requirements for Tier I specified in appendix C of this part.

Human noncancer value (HNV) is the maximum ambient water concentration of a substance at which adverse noncancer effects are not likely to occur in the human population from lifetime exposure via either: drinking the water, consuming fish from the water, and water-related recreation activities; or consuming fish from the water, and water-related recreation activities using the Methodologies for the Development of Human Health Criteria and Values in appendix C of this part.

Indian Tribe or *Tribe* means any Indian Tribe, band, group, or community recognized by the Secretary of the Interior and exercising governmental authority over a Federal Indian reservation.

LC50 is a statistically or graphically estimated concentration that is expected

to be lethal to 50 percent of a group of organisms under specified conditions.

Load allocation (LA) is the portion of a receiving water's loading capacity that is attributed either to one of its existing or future nonpoint sources or to natural background sources, as more fully defined at 40 CFR 130.2(g). Nonpoint sources include: in-place contaminants, direct wet and dry deposition, groundwater inflow, and overland runoff.

Loading capacity is the greatest amount of loading that a water can receive without violating water quality standards.

Lowest observed adverse effect level (LOAEL) is the lowest tested dose or concentration of a substance which resulted in an observed adverse effect in exposed test organisms when all higher doses or concentrations resulted in the same or more severe effects.

Method detection level is the minimum concentration of an analyte (substance) that can be measured and reported with a 99 percent confidence that the analyte concentration is greater than zero as determined by the procedure set forth in appendix B of 40 CFR part 136.

Minimum Level (ML) is the concentration at which the entire analytical system must give a recognizable signal and acceptable calibration point. The ML is the concentration in a sample that is equivalent to the concentration of the lowest calibration standard analyzed by a specific analytical procedure, assuming that all the method-specified sample weights, volumes and processing steps have been followed.

New Great Lakes discharger is any building, structure, facility, or installation from which there is or may be a ''discharge of pollutants'' (as defined in 40 CFR 122.2) to the Great Lakes System, the construction of which commenced after March 23, 1997.

No observed adverse effect level (NOAEL) is the highest tested dose or concentration of a substance which resulted in no observed adverse effect in exposed test organisms where higher doses or concentrations resulted in an adverse effect.

No observed effect concentration (NOEC) is the highest concentration of toxicant to which organisms are exposed in a full life-cycle or partial life-cycle (short-term) test, that causes no observable adverse effects on the test organisms (i.e., the highest concentration of toxicant in which the values for the observed responses are not statistically significantly different from the controls).

Open waters of the Great Lakes (OWGLs) means all of the waters within Lake Erie, Lake Huron (including Lake St. Clair), Lake Michigan, Lake Ontario, and Lake Superior lakeward from a line drawn across the mouth of tributaries to the Lakes, including all waters enclosed by constructed breakwaters, but not including the connecting channels.

Quantification level is a measurement of the concentration of a contaminant obtained by using a specified laboratory procedure calibrated at a specified concentration above the method detection level. It is considered the lowest concentration at which a particular contaminant can be quantitatively measured using a specified laboratory procedure for monitoring of the contaminant.

Quantitative structure activity relationship (QSAR) or structure activity relationship (SAR) is a mathematical relationship between a property (activity) of a chemical and a number of descriptors of the chemical. These descriptors are chemical or physical characteristics obtained experimentally or predicted from the structure of the chemical.

Risk associated dose (RAD) is a dose of a known or presumed carcinogenic substance in (mg/kg)/day which, over a lifetime of exposure, is estimated to be associated with a plausible upper bound incremental cancer risk equal to one in 100,000.

Species mean acute value (SMAV) is the geometric mean of the results of all acceptable flow-through acute toxicity tests (for which the concentrations of the test material were measured) with the most sensitive tested life stage of the species. For a species for which no such result is available for the most sensitive tested life stage, the SMAV is the geometric mean of the results of all acceptable acute toxicity tests with the most sensitive tested life stage.

Species mean chronic value (SMCV) is the geometric mean of the results of all acceptable life-cycle and partial life-cycle toxicity tests with the species; for a species of fish for which no such result is available, the SMCV is the geometric mean of all acceptable early life-stage tests.

Stream design flow is the stream flow that represents critical conditions, upstream from the source, for protection of aquatic life, human health, or wildlife.

Threshold effect is an effect of a substance for which there is a theoretical or empirically established dose or concentration below which the effect does not occur.

Tier I criteria are numeric values derived by use of the Tier I methodologies in appendixes A, C and D of this part, the methodology in appendix B of this part, and the procedures in appendix F of this part, that either have been adopted as numeric criteria into a water quality standard or are used to implement narrative water quality criteria.

Tier II values are numeric values derived by use of the Tier II methodologies in appendixes A and C of this part, the methodology in appendix B of this part, and the procedures in appendix F of this part, that are used to implement narrative water quality criteria.

Total maximum daily load (TMDL) is the sum of the individual wasteload allocations for point sources and load allocations for nonpoint sources and natural background, as more fully defined at 40 CFR 130.2(i). A TMDL sets and allocates the maximum amount of a pollutant that may be introduced into a water body and still assure attainment and maintenance of water quality standards.

Tributaries of the Great Lakes System means all waters of the Great Lakes System that are not open waters of the Great Lakes, or connecting channels.

Uncertainty factor (UF) is one of several numeric factors used in operationally deriving criteria from experimental data to account for the quality or quantity of the available data.

Uptake is acquisition of a substance from the environment by an organism as a result of any active or passive process.

Wasteload allocation (WLA) is the portion of a receiving water's loading capacity that is allocated to one of its existing or future point sources of pollution, as more fully defined at 40 CFR 130.2(h). In the absence of a TMDL approved by EPA pursuant to 40 CFR 130.7 or an assessment and remediation plan developed and approved in accordance with procedure 3.A of appendix F of this part, a WLA is the allocation for an individual point source, that ensures that the level of water quality to be achieved by the point source is derived from and complies with all applicable water quality standards.

Wet weather point source means any discernible, confined and discrete conveyance from which pollutants are, or may be, discharged as the result of a wet weather event. Discharges from wet weather point sources shall include only: discharges of storm water from a municipal separate storm sewer as defined at 40 CFR 122.26(b)(8); storm water discharge associated with industrial activity as defined at 40 CFR 122.26(b)(14); discharges of storm water and sanitary wastewaters (domestic,

commercial, and industrial) from a combined sewer overflow; or any other stormwater discharge for which a permit is required under section 402(p) of the Clean Water Act. A storm water discharge associated with industrial activity which is mixed with process wastewater shall not be considered a wet weather point source.

§ 132.3 Adoption of criteria.

The Great Lakes States and Tribes shall adopt numeric water quality criteria for the purposes of section 303(c) of the Clean Water Act applicable to waters of the Great Lakes System in accordance with § 132.4(d) that are consistent with:

(a) The acute water quality criteria for protection of aquatic life in Table 1 of this part, or a site-specific modification thereof in accordance with procedure 1 of appendix F of this part;

(b) The chronic water quality criteria for protection of aquatic life in Table 2 of this part, or a site-specific modification thereof in accordance with procedure 1 of appendix F of this part;

(c) The water quality criteria for protection of human health in Table 3 of this part, or a site-specific modification thereof in accordance with procedure 1 of appendix F of this part; and

(d) The water quality criteria for protection of wildlife in Table 4 of this part, or a site-specific modification thereof in accordance with procedure 1 of appendix F of this part.

§ 132.4 State adoption and application of methodologies, policies and procedures.

(a) The Great Lakes States and Tribes shall adopt requirements applicable to waters of the Great Lakes System for the purposes of sections 118, 301, 303, and 402 of the Clean Water Act that are consistent with:

(1) The definitions in § 132.2;

(2) The Methodologies for Development of Aquatic Life Criteria and Values in appendix A of this part;

(3) The Methodology for Development of Bioaccumulation Factors in appendix B of this part;

(4) The Methodologies for Development of Human Health Criteria and Values in appendix C of this part;

(5) The Methodology for Development of Wildlife Criteria in appendix D of this part;

(6) The Antidegradation Policy in appendix E of this part; and

(7) The Implementation Procedures in appendix F of this part.

(b) Except as provided in paragraphs (g), (h), and (i) of this section, the Great Lakes States and Tribes shall use methodologies consistent with the methodologies designated as Tier I methodologies in appendixes A, C, and D of this part, the methodology in appendix B of this part, and the procedures in appendix F of this part when adopting or revising numeric water quality criteria for the purposes of section 303(c) of the Clean Water Act for the Great Lakes System.

(c) Except as provided in paragraphs (g), (h), and (i) of this section, the Great Lakes States and Tribes shall use methodologies and procedures consistent with the methodologies designated as Tier I methodologies in appendixes A, C, and D of this part, the Tier II methodologies in appendixes A and C of this part, the methodology in appendix B of this part, and the procedures in appendix F of this part to develop numeric criteria and values when implementing narrative water quality criteria adopted for purposes of section 303(c) of the Clean Water Act.

(d) The water quality criteria and values adopted or developed pursuant to paragraphs (a) through (c) of this section shall apply as follows:

(1) The acute water quality criteria and values for the protection of aquatic life, or site-specific modifications thereof, shall apply to all waters of the Great Lakes System.

(2) The chronic water quality criteria and values for the protection of aquatic life, or site-specific modifications thereof, shall apply to all waters of the Great Lakes System.

(3) The water quality criteria and values for protection of human health, or site-specific modifications thereof, shall apply as follows:

(i) Criteria and values derived as HCV-Drinking and HNV-Drinking shall apply to the Open Waters of the Great Lakes, all connecting channels of the Great Lakes, and all other waters of the Great Lakes System that have been designated as public water supplies by any State or Tribe in accordance with 40 CFR 131.10.

(ii) Criteria and values derived as HCV-Nondrinking and HNV-Nondrinking shall apply to all waters of the Great Lakes System other than those in paragraph (d)(3)(i) of this section.

(4) Criteria for protection of wildlife, or site-specific modifications thereof, shall apply to all waters of the Great Lakes System.

(e) The Great Lakes States and Tribes shall apply implementation procedures consistent with the procedures in appendix F of this part for all applicable purposes under the Clean Water Act, including developing total maximum daily loads for the purposes of section 303(d) and water quality-based effluent limits for the purposes of section 402, in establishing controls on the discharge of any pollutant to the Great Lakes System by any point source with the following exceptions:

(1) The Great Lakes States and Tribes are not required to apply these implementation procedures in establishing controls on the discharge of any pollutant by a wet weather point source. Any adopted implementation procedures shall conform with all applicable Federal, State and Tribal requirements.

(2) The Great Lakes States and Tribes may, but are not required to, apply procedures consistent with procedures 1, 2, 3, 4, 5, 7, 8, and 9 of appendix F of this part in establishing controls on the discharge of any pollutant set forth in Table 5 of this part. Any procedures applied in lieu of these implementation procedures shall conform with all applicable Federal, State, and Tribal requirements.

(f) The Great Lakes States and Tribes shall apply an antidegradation policy consistent with the policy in appendix E for all applicable purposes under the Clean Water Act, including 40 CFR 131.12.

(g) For pollutants listed in Table 5 of this part, the Great Lakes States and Tribes shall:

(1) Apply any methodologies and procedures acceptable under 40 CFR part 131 when developing water quality criteria or implementing narrative criteria; and

(2) Apply the implementation procedures in appendix F of this part or alternative procedures consistent with all applicable Federal, State, and Tribal laws.

(h) For any pollutant other than those in Table 5 of this part for which the State or Tribe demonstrates that a methodology or procedure in this part is not scientifically defensible, the Great Lakes States and Tribes shall:

(1) Apply an alternative methodology or procedure acceptable under 40 CFR part 131 when developing water quality criteria; or

(2) Apply an alternative implementation procedure that is consistent with all applicable Federal, State, and Tribal laws.

(i) Nothing in this part shall prohibit the Great Lakes States and Tribes from adopting numeric water quality criteria, narrative criteria, or water quality values that are more stringent than criteria or values specified in § 132.3 or that would be derived from application of the methodologies set forth in appendixes A, B, C, and D of this part, or to adopt antidegradation standards and implementation procedures more

stringent than those set forth in appendixes E and F of this part.

§ 132.5 Procedures for adoption and EPA review.

(a) Except as provided in paragraph (c) of this section, the Great Lakes States and Tribes shall adopt and submit for EPA review and approval the criteria, methodologies, policies, and procedures developed pursuant to this part no later than September 23, 1996.

(b) The following elements must be included in each submission to EPA for review:

(1) The criteria, methodologies, policies, and procedures developed pursuant to this part;

(2) Certification by the Attorney General or other appropriate legal authority pursuant to 40 CFR 123.62 and 40 CFR 131.6(e) as appropriate;

(3) All other information required for submission of National Pollutant Discharge Elimination System (NPDES) program modifications under 40 CFR 123.62; and

(4) General information which will aid EPA in determining whether the criteria, methodologies, policies and procedures are consistent with the requirements of the Clean Water Act and this part, as well as information on general policies which may affect their application and implementation.

(c) The Regional Administrator may extend the deadline for the submission required in paragraph (a) of this section if the Regional Administrator believes that the submission will be consistent with the requirements of this part and can be reviewed and approved pursuant to this section no later than March 23, 1997.

(d) If a Great Lakes State or Tribe makes no submission pursuant to this part to EPA for review, the requirements of this part shall apply to discharges to waters of the Great Lakes System located within the State or Federal Indian reservation upon EPA's publication of a final rule indicating the effective date of the part 132 requirements in the identified jurisdictions.

(e) If a Great Lakes State or Tribe submits criteria, methodologies, policies, and procedures pursuant to this part to EPA for review that contain substantial modifications of the State or Tribal NPDES program, EPA shall issue public notice and provide a minimum of 30 days for public comment on such modifications. The public notice shall conform with the requirements of 40 CFR 123.62.

(f) After review of State or Tribal submissions under this section, and following the public comment period in subparagraph (e) of this section, if any, EPA shall either:

(1) Publish notice of approval of the submission in the **Federal Register** within 90 days of such submission; or

(2) Notify the State or Tribe within 90 days of such submission that EPA has determined that all or part of the submission is inconsistent with the requirements of the Clean Water Act or this part and identify any necessary changes to obtain EPA approval. If the State or Tribe fails to adopt such changes within 90 days after the notification, EPA shall publish a notice in the **Federal Register** identifying the approved and disapproved elements of the submission and a final rule in the **Federal Register** identifying the provisions of part 132 that shall apply to discharges within the State or Federal Indian reservation.

(g) EPA's approval or disapproval of a State or Tribal submission shall be based on the requirements of this part and of the Clean Water Act. EPA's determination whether the criteria, methodologies, policies, and procedures in a State or Tribal submission are consistent with the requirements of this part will be based on whether:

(1) *For pollutants listed in Tables 1, 2, 3, and 4 of this part.* The Great Lakes State or Tribe has adopted numeric water quality criteria as protective as each of the numeric criteria in Tables 1, 2, 3, and 4 of this part, taking into account any site-specific criteria modifications in accordance with procedure 1 of appendix F of this part;

(2) *For pollutants other than those listed in Tables 1, 2, 3, 4, and 5 of this part.* The Great Lakes State or Tribe demonstrates that either:

(i) It has adopted numeric criteria in its water quality standards that were derived, or are as protective as or more protective than could be derived, using the methodologies in appendixes A, B, C, and D of this part, and the site-specific criteria modification procedures in accordance with procedure 1 of appendix F of this part; or

(ii) It has adopted a procedure by which water quality-based effluent limits and total maximum daily loads are developed using the more protective of:

(A) Numeric criteria adopted by the State into State water quality standards and approved by EPA prior to March 23, 1997; or

(B) Water quality criteria and values derived pursuant to § 132.4(c); and

(3) *For methodologies, policies, and procedures.* The Great Lakes State or Tribe has adopted methodologies, policies, and procedures as protective as the corresponding methodology, policy, or procedure in § 132.4. The Great Lakes State or Tribe may adopt provisions that are more protective than those contained in this part. Adoption of a more protective element in one provision may be used to offset a less protective element in the same provision as long as the adopted provision is as protective as the corresponding provision in this part; adoption of a more protective element in one provision, however, is not justification for adoption of a less protective element in another provision of this part.

(h) A submission by a Great Lakes State or Tribe will need to include any provisions that EPA determines, based on EPA's authorities under the Clean Water Act and the results of consultation under section 7 of the Endangered Species Act, are necessary to ensure that water quality is not likely to jeopardize the continued existence of any endangered or threatened species listed under section 4 of the Endangered Species Act or result in the destruction or adverse modification of such species' critical habitat.

(i) EPA's approval of the elements of a State's or Tribe's submission will constitute approval under section 118 of the Clean Water Act, approval of the submitted water quality standards pursuant to section 303 of the Clean Water Act, and approval of the submitted modifications to the State's or Tribe's NPDES program pursuant to section 402 of the Clean Water Act.

§ 132.6 Application of part 132 requirements in Great Lakes States and Tribes. [Reserved]

Tables to Part 132

TABLE 1.—ACUTE WATER QUALITY CRITERIA FOR PROTECTION OF AQUATIC LIFE IN AMBIENT WATER

EPA recommends that metals criteria be expressed as dissolved concentrations (see appendix A, I.A.4 for more information regarding metals criteria).

(a)

Chemical	CMC (µg/L)	Conversion factor (CF)
Arsenic (III)	[a,b] 339.8	1.000
Chromium (VI)	[a,b] 16.02	0.982
Cyanide	[c] 22	n/a
Dieldrin	[d] 0.24	n/a
Endrin	[d] 0.086	n/a
Lindane	[d] 0.95	n/a
Mercury (II)	[a,b] 1.694	0.85
Parathion	[d] 0.065	n/a
Selenium	[a,b] 19.34	0.922

[a] $CMC=CMC^{tr}$.

[b] $CMC^{d}=(CMC^{tr})$ CF. The CMC^{d} shall be rounded to two significant digits.

[c] CMC should be considered free cyanide as CN.

[d] CMC=CMC^t.

Notes:

The term ''n/a'' means not applicable.

CMC is Criterion Maximum Concentration.

CMC^{tr} is the CMC expressed as total recoverable.

CMC^d is the CMC expressed as a dissolved concentration.

CMC^t is the CMC expressed as a total concentration.

(b)

Chemical	m_A	b_A	Conversion factor (CF)
Cadmium [a,b]	1.128	−3.6867	0.85
Chromium (III) [a,b]	0.819	+3.7256	0.316
Copper [a,b]	0.9422	−1.700	0.960
Nickel [a,b]	0.846	+2.255	0.998
Pentachlorophenol [c]	1.005	−4.869	n/a
Zinc [a,b]	0.8473	+0.884	0.978

[a] CMC^{tr}=exp { m_A [ln (hardness)]+b_A}.

[b] CMC^d=(CMC^{tr}) CF. The CMC^d shall be rounded to two significant digits.

[c] CMC^t=exp m_A { [pH]+b_A}. The CMC^t shall be rounded to two significant digits.

Notes:

The term ''exp'' represents the base e exponential function.

The term ''n/a'' means not applicable.

CMC is Criterion Maximum Concentration.

CMC^{tr} is the CMC expressed as total recoverable.

CMC^d is the CMC expressed as a dissolved concentration.

CMC^t is the CMC expressed as a total concentration.

TABLE 2.—CHRONIC WATER QUALITY CRITERIA FOR PROTECTION OF AQUATIC LIFE IN AMBIENT WATER

EPA recommends that metals criteria be expressed as dissolved concentrations (see appendix A, I.A.4 for more information regarding metals criteria).

(a)

Chemical	CCC (µg/L)	Conversion factor (CF)
Arsenic (III)	[a,b] 147.9	1.000
Chromium (VI)	[a,b] 10.98	0.962
Cyanide	[c] 5.2	n/a
Dieldrin	[d] 0.056	n/a
Endrin	[d] 0.036	n/a
Mercury (II)	[a,b] 0.9081	0.85
Parathion	[d] 0.013	n/a
Selenium	[a,b] 5	0.922

[a] CCC=CCC^{tr}.

[b] CCC^d=(CCC^{tr}) CF. The CCC^d shall be rounded to two significant digits.

[c] CCC should be considered free cyanide as CN.

[d] CCC=CCC^t.

Notes:

The term ''n/a'' means not applicable.

CCC is Criterion Continuous Concentration.

CCC^{tr} is the CCC expressed as total recoverable.

CCC^d is the CCC expressed as a dissolved concentration.

CCC^t is the CCC expressed as a total concentration.

(b)

Chemical	m_c	b_c	Conversion factor (CF)
Cadmium [a,b]	0.7852	−2.715	0.850
Chromium (III) [a,b]	0.819	+0.6848	0.860
Copper [a,b]	0.8545	−1.702	0.960
Nickel [a,b]	0.846	+0.0584	0.997
Pentachlorophenol [c]	1.005	−5.134	n/a
Zinc [a,b]	0.8473	+0.884	0.986

[a] CCC^{tr}=exp {m_c[ln (hardness)]+b_c}.

[b] CCC$_d$=(CCC^{tr}) (CF). The CCC^d shall be rounded to two significant digits.

[c] CMC^t=exp {m_A[pH]+b_A}. The CMC^t shall be rounded to two significant digits.

Notes:

The term ''exp'' represents the base e exponential function.

The term ''n/a'' means not applicable.

CCC is Criterion Continuous Concentration.

CCC^{tr} is the CCC expressed as total recoverable.

CCC^d is the CCC expressed as a dissolved concentration.

CCC^t is the CCC expressed as a total concentration.

TABLE 3.—WATER QUALITY CRITERIA FOR PROTECTION OF HUMAN HEALTH

Chemical	HNV (µg/L)		HCV (µg/L)	
	Drinking	Nondrinking	Drinking	Nondrinking
Benzene	1.9E1	5.1E2	1.2E1	3.1E2
Chlordane	1.4E–3	1.4E–3	2.5E–4	2.5E–4
Chlorobenzene	4.7E2	3.2E3		
Cyanides	6.0E2	4.8E4		
DDT	2.0E–3	2.0E–3	1.5E–4	1.5E–4
Dieldrin	4.1E–4	4.1E–4	6.5E–6	6.5E–6
2,4-Dimethylphenol	4.5E2	8.7E3		
2,4-Dinitrophenol	5.5E1	2.8E3		
Hexachlorobenzene	4.6E–2	4.6E–2	4.5E–4	4.5E–4
Hexachloroethane	6.0	7.6	5.3	6.7
Lindane	4.7E–1	5.0E–1		
Mercury [1]	1.8E–3	1.8E–3		
Methylene chloride	1.6E3	9.0E4	4.7E1	2.6E3
PCBs (class)			3.9E–6	3.9E–6
2,3,7,8-TCDD	6.7E–8	6.7E–8	8.6E–9	8.6E–9
Toluene	5.6E3	5.1E4		
Toxaphene			6.8E–5	6.8E–5

TABLE 3.—WATER QUALITY CRITERIA FOR PROTECTION OF HUMAN HEALTH—Continued

Chemical	HNV (µg/L)		HCV (µg/L)	
	Drinking	Nondrinking	Drinking	Nondrinking
Trichloroethylene			2.9E1	3.7E2

[1] Includes methylmercury.

TABLE 4.—WATER QUALITY CRITERIA FOR PROTECTION OF WILDLIFE

Chemical	Criteria (µg/L)
DDT and metabolites	1.1E–5
Mercury (including methylmercury).	1.3E–3
PCBs (class)	7.4E–5
2,3,7,8-TCDD	3.1E–9

TABLE 5.—POLLUTANTS SUBJECT TO FEDERAL, STATE, AND TRIBAL REQUIREMENTS

Alkalinity
Ammonia
Bacteria
Biochemical oxygen demand (BOD)
Chlorine
Color
Dissolved oxygen
Dissolved solids
pH
Phosphorus
Salinity
Temperature
Total and suspended solids
Turbidity

TABLE 6.—POLLUTANTS OF INITIAL FOCUS IN THE GREAT LAKES WATER QUALITY INITIATIVE

A. Pollutants that are bioaccumulative chemicals of concern (BCCs):
Chlordane
4,4′-DDD; p,p′-DDD; 4,4′-TDE; p,p′-TDE
4,4′-DDE; p,p′-DDE
4,4′-DDT; p,p′-DDT
Dieldrin
Hexachlorobenzene
Hexachlorobutadiene; hexachloro-1, 3-butadiene
Hexachlorocyclohexanes; BHCs
alpha-Hexachlorocyclohexane; alpha-BHC
beta-Hexachlorocyclohexane; beta-BHC
delta-Hexachlorocyclohexane; delta-BHC
Lindane; gamma-hexachlorocyclohexane; gamma-BHC
Mercury
Mirex
Octachlorostyrene
PCBs; polychlorinated biphenyls
Pentachlorobenzene
Photomirex
2,3,7,8-TCDD; dioxin
1,2,3,4-Tetrachlorobenzene
1,2,4,5-Tetrachlorobenzene Toxaphene

B. Pollutants that are not bioaccumulative chemicals of concern:
Acenaphthene
Acenaphthylene
Acrolein; 2-propenal
Acrylonitrile
Aldrin
Aluminum
Anthracene
Antimony
Arsenic
Asbestos
1,2-Benzanthracene; benz[a]anthracene
Benzene
Benzidine
Benzo[a]pyrene; 3,4-benzopyrene
3,4-Benzofluoranthene; benzo[b]fluoranthene
11,12-Benzofluoranthene; benzo[k]fluoranthene
1,12-Benzoperylene; benzo[ghi]perylene
Beryllium
Bis(2-chloroethoxy) methane
Bis(2-chloroethyl) ether
Bis(2-chloroisopropyl) ether
Bromoform; tribomomethane
4-Bromophenyl phenyl ether
Butyl benzyl phthalate
Cadmium
Carbon tetrachloride; tetrachloromethane
Chlorobenzene
p-Chloro-m-cresol; 4-chloro-3-methylphenol
Chlorodibromomethane
Chlorethane
2-Chloroethyl vinyl ether
Chloroform; trichloromethane
2-Chloronaphthalene
2-Chlorophenol
4-Chlorophenyl phenyl ether
Chlorpyrifos
Chromium
Chrysene
Copper
Cyanide
2,4-D; 2,4-Dichlorophenoxyacetic acid
DEHP; di(2-ethylhexyl) phthalate
Diazinon
1,2:5,6-Dibenzanthracene; dibenz[a,h]anthracene
Dibutyl phthalate; di-n-butyl phthalate
1,2-Dichlorobenzene
1,3-Dichlorobenzene
1,4-Dichlorobenzene
3,3′-Dichlorobenzidine
Dichlorobromomethane; bromodichloromethane
1,1-Dichloroethane
1,2-Dichloroethane
1,1-Dichloroethylene; vinylidene chloride
1,2-trans-Dichloroethylene
2,4-Dichlorophenol
1,2-Dichloropropane
1,3-Dichloropropene; 1,3-dichloropropylene
Diethyl phthalate
2,4-Dimethylphenol; 2,4-xylenol
Dimethyl phthalate
4,6-Dinitro-o-cresol; 2-methyl-4,6-dinitrophenol
2,4-Dinitrophenol
2,4-Dinitrotoluene
2,6-Dinitrotoluene
Dioctyl phthalate; di-n-octyl phthalate
1,2-Diphenylhydrazine
Endosulfan; thiodan
alpha-Endosulfan
beta-Endosulfan
Endosulfan sulfate
Endrin
Endrin aldehyde
Ethylbenzene
Fluoranthene
Fluorene; 9H-fluorene
Fluoride
Guthion
Heptachlor
Heptachlor epoxide
Hexachlorocyclopentadiene
Hexachloroethane
Indeno[1,2,3-cd]pyrene; 2,3-o-phenylene pyrene
Isophorone
Lead
Malathion
Methoxychlor
Methyl bromide; bromomethane
Methyl chloride; chloromethane
Methylene chloride; dichloromethane
Napthalene
Nickel
Nitrobenzene
2-Nitrophenol
4-Nitrophenol
N-Nitrosodimethylamine
N-Nitrosodiphenylamine
N-Nitrosodipropylamine; N-nitrosodi-n-propylamine
Parathion
Pentachlorophenol
Phenanthrene
Phenol
Iron
Pyrene
Selenium
Silver
1,1,2,2-Tetrachloroethane
Tetrachloroethylene
Thallium
Toluene; methylbenzene
1,2,4-Trichlorobenzene
1,1,1-Trichloroethane
1,1,2-Trichloroethane
Trichloroethylene; trichloroethene
2,4,6-Trichlorophenol
Vinyl chloride; chloroethylene; chloroethene
Zinc

Appendix A to part 132—Great Lakes Water Quality Initiative Methodologies for Developments of Aquatic Life Criteria and Values

Methodology for Deriving Aquatic Life Criteria: Tier I

Great Lakes States and Tribes shall adopt provisions consistent with (as protective as) this appendix.

I. Definitions

A. *Material of Concern.* When defining the material of concern the following should be considered:

1. Each separate chemical that does not ionize substantially in most natural bodies of water should usually be considered a separate material, except possibly for structurally similar organic compounds that only exist in large quantities as commercial mixtures of the various compounds and apparently have similar biological, chemical, physical, and toxicological properties.

2. For chemicals that ionize substantially in most natural bodies of water (e.g., some phenols and organic acids, some salts of phenols and organic acids, and most inorganic salts and coordination complexes of metals and metalloid), all forms that would be in chemical equilibrium should usually be considered one material. Each different oxidation state of a metal and each different non-ionizable covalently bonded organometallic compound should usually be considered a separate material.

3. The definition of the material of concern should include an operational analytical component. Identification of a material simply as ''sodium,'' for example, implies ''total sodium,'' but leaves room for doubt. If ''total'' is meant, it must be explicitly stated. Even ''total'' has different operational definitions, some of which do not necessarily measure ''all that is there'' in all samples. Thus, it is also necessary to reference or describe the analytical method that is intended. The selection of the operational analytical component should take into account the analytical and environmental chemistry of the material and various practical considerations, such as labor and equipment requirements, and whether the method would require measurement in the field or would allow measurement after samples are transported to a laboratory.

a. The primary requirements of the operational analytical component are that it be appropriate for use on samples of receiving water, that it be compatible with the available toxicity and bioaccumulation data without making extrapolations that are too hypothetical, and that it rarely result in underprotection or overprotection of aquatic organisms and their uses. Toxicity is the property of a material, or combination of materials, to adversely affect organisms.

b. Because an ideal analytical measurement will rarely be available, an appropriate compromise measurement will usually have to be used. This compromise measurement must fit with the general approach that if an ambient concentration is lower than the criterion, unacceptable effects will probably not occur, i.e., the compromise measure must not err on the side of underprotection when measurements are made on a surface water. What is an appropriate measurement in one situation might not be appropriate for another. For example, because the chemical and physical properties of an effluent are usually quite different from those of the receiving water, an analytical method that is appropriate for analyzing an effluent might not be appropriate for expressing a criterion, and vice versa. A criterion should be based on an appropriate analytical measurement, but the criterion is not rendered useless if an ideal measurement either is not available or is not feasible.

Note: The analytical chemistry of the material might have to be taken into account when defining the material or when judging the acceptability of some toxicity tests, but a criterion must not be based on the sensitivity of an analytical method. When aquatic organisms are more sensitive than routine analytical methods, the proper solution is to develop better analytical methods.

4. It is now the policy of EPA that the use of dissolved metal to set and measure compliance with water quality standards is the recommended approach, because dissolved metal more closely approximates the bioavailable fraction of metal in the water column that does total recoverable metal. One reason is that a primary mechanism for water column toxicity is adsorption at the gill surface which requires metals to be in the dissolved form. Reasons for the consideration of total recoverable metals criteria include risk management considerations not covered by evaluation of water column toxicity. A risk manager may consider sediments and food chain effects and may decide to take a conservative approach for metals, considering that metals are very persistent chemicals. This approach could include the use of total recoverable metal in water quality standards. A range of different risk management decisions can be justified. EPA recommends that State water quality standards be based on dissolved metal. EPA will also approve a State risk management decision to adopt standards based on total recoverable metal, if those standards are otherwise approvable under this program.

B. *Acute Toxicity.* Concurrent and delayed adverse effect(s) that results from an acute exposure and occurs within any short observation period which begins when the exposure begins, may extend beyond the exposure period, and usually does not constitute a substantial portion of the life span of the organism. (Concurrent toxicity is an adverse effect to an organism that results from, and occurs during, its exposure to one or more test materials.) Exposure constitutes contact with a chemical or physical agent. Acute exposure, however, is exposure of an organism for any short period which usually does not constitute a substantial portion of its life span.

C. *Chronic Toxicity.* Concurrent and delayed adverse effect(s) that occurs only as a result of a chronic exposure. Chronic exposure is exposure of an organism for any long period or for a substantial portion of its life span.

II. Collection of Data

A. Collect all data available on the material concerning toxicity to aquatic animals and plants.

B. All data that are used should be available in typed, dated, and signed hard copy (e.g., publication, manuscript, letter, memorandum, etc.) with enough supporting information to indicate that acceptable test procedures were used and that the results are reliable. In some cases, it might be appropriate to obtain written information from the investigator, if possible. Information that is not available for distribution shall not be used.

C. Questionable data, whether published or unpublished, must not be used. For example, data must be rejected if they are from tests that did not contain a control treatment, tests in which too many organisms in the control treatment died or showed signs of stress or disease, and tests in which distilled or deionized water was used as the dilution water without the addition of appropriate salts.

D. Data on technical grade materials may be used if appropriate, but data on formulated mixtures and emulsifiable concentrates of the material must not be used.

E. For some highly volatile, hydrolyzable, or degradable materials, it might be appropriate to use only results of flow-through tests in which the concentrations of test material in test solutions were measured using acceptable analytical methods. A flow-through test is a test with aquatic organisms in which test solutions flow into constant-volume test chambers either intermittently (e.g., every few minutes) or continuously, with the excess flowing out.

F. Data must be rejected if obtained using:

1. Brine shrimp, because they usually only occur naturally in water with salinity greater than 35 g/kg.

2. Species that do not have reproducing wild populations in North America.

3. Organisms that were previously exposed to substantial concentrations of the test material or other contaminants.

4. Saltwater species except for use in deriving acute-chronic ratios. An ACR is a standard measure of the acute toxicity of a material divided by an appropriate measure of the chronic toxicity of the same material under comparable conditions.

G. Questionable data, data on formulated mixtures and emulsifiable concentrates, and data obtained with species non-resident to North America or previously exposed organisms may be used to provide auxiliary information but must not be used in the derivation of criteria.

III. Required Data

A. Certain data should be available to help ensure that each of the major kinds of possible adverse effects receives adequate consideration. An adverse effect is a change in an organism that is harmful to the organism. Exposure means contact with a chemical or physical agent. Results of acute and chronic toxicity tests with representative species of aquatic animals are necessary so that data available for tested species can be considered a useful indication of the sensitivities of appropriate untested species. Fewer data concerning toxicity to aquatic plants are usually available because procedures for conducting tests with plants and interpreting the results of such tests are not as well developed.

B. To derive a Great Lakes Tier I criterion for aquatic organisms and their uses, the following must be available:

1. Results of acceptable acute (or chronic) tests (see section IV or VI of this appendix) with at least one species of freshwater animal in at least eight different families such that all of the following are included:

a. The family Salmonidae in the class Osteichthyes;

b. One other family (preferably a commercially or recreationally important, warmwater species) in the class Osteichthyes (e.g., bluegill, channel catfish);

c. A third family in the phylum Chordata (e.g., fish, amphibian);

d. A planktonic crustacean (e.g., a cladoceran, copepod);

e. A benthic crustacean (e.g., ostracod, isopod, amphipod, crayfish);

f. An insect (e.g., mayfly, dragonfly, damselfly, stonefly, caddisfly, mosquito, midge);

g. A family in a phylum other than Arthropoda or Chordata (e.g., Rotifera, Annelida, Mollusca);

h. A family in any order of insect or any phylum not already represented.

2. Acute-chronic ratios (see section VI of this appendix) with at least one species of aquatic animal in at least three different families provided that of the three species:

a. At least one is a fish;

b. At least one is an invertebrate; and

c. At least one species is an acutely sensitive freshwater species (the other two may be saltwater species).

3. Results of at least one acceptable test with a freshwater algae or vascular plant is desirable but not required for criterion derivation (see section VIII of this appendix). If plants are among the aquatic organisms most sensitive to the material, results of a test with a plant in another phylum (division) should also be available.

C. If all required data are available, a numerical criterion can usually be derived except in special cases. For example, derivation of a chronic criterion might not be possible if the available ACRs vary by more than a factor of ten with no apparent pattern. Also, if a criterion is to be related to a water quality characteristic (see sections V and VII of this appendix), more data will be required.

D. Confidence in a criterion usually increases as the amount of available pertinent information increases. Thus, additional data are usually desirable.

IV. Final Acute Value

A. Appropriate measures of the acute (short-term) toxicity of the material to a variety of species of aquatic animals are used to calculate the Final Acute Value (FAV). The calculated Final Acute Value is a calculated estimate of the concentration of a test material such that 95 percent of the genera (with which acceptable acute toxicity tests have been conducted on the material) have higher Genus Mean Acute Values (GMAVs). An acute test is a comparative study in which organisms, that are subjected to different treatments, are observed for a short period usually not constituting a substantial portion of their life span. However, in some cases, the Species Mean Acute Value (SMAV) of a commercially or recreationally important species of the Great Lakes System is lower than the calculated FAV, then the SMAV replaces the calculated FAV in order to provide protection for that important species.

B. Acute toxicity tests shall be conducted using acceptable procedures. For good examples of acceptable procedures see American Society for Testing and Materials (ASTM) Standard E 729, Guide for Conducting Acute Toxicity Tests with Fishes, Macroinvertebrates, and Amphibians.

C. Except for results with saltwater annelids and mysids, results of acute tests during which the test organisms were fed should not be used, unless data indicate that the food did not affect the toxicity of the test material. (**Note:** If the minimum acute-chronic ratio data requirements (as described in section III.B.2 of this appendix) are not met with freshwater data alone, saltwater data may be used.)

D. Results of acute tests conducted in unusual dilution water, e.g., dilution water in which total organic carbon or particulate matter exceeded five mg/L, should not be used, unless a relationship is developed between acute toxicity and organic carbon or particulate matter, or unless data show that organic carbon or particulate matter, etc., do not affect toxicity.

E. Acute values must be based upon endpoints which reflect the total severe adverse impact of the test material on the organisms used in the test. Therefore, only the following kinds of data on acute toxicity to aquatic animals shall be used:

1. Tests with daphnids and other cladocerans must be started with organisms less than 24 hours old and tests with midges must be started with second or third instar larvae. It is preferred that the results should be the 48-hour EC50 based on the total percentage of organisms killed and immobilized. If such an EC50 is not available for a test, the 48-hour LC50 should be used in place of the desired 48-hour EC50. An EC50 or LC50 of longer than 48 hours can be used as long as the animals were not fed and the control animals were acceptable at the end of the test. An EC50 is a statistically or graphically estimated concentration that is expected to cause one or more specified effects in 50% of a group of organisms under specified conditions. An LC50 is a statistically or graphically estimated concentration that is expected to be lethal to 50% of a group of organisms under specified conditions.

2. It is preferred that the results of a test with embryos and larvae of barnacles, bivalve molluscs (clams, mussels, oysters and scallops), sea urchins, lobsters, crabs, shrimp and abalones be the 96-hour EC50 based on the percentage of organisms with incompletely developed shells plus the percentage of organisms killed. If such an EC50 is not available from a test, of the values that are available from the test, the lowest of the following should be used in place of the desired 96-hour EC50: 48- to 96-hour EC50s based on percentage of organisms with incompletely developed shells plus percentage of organisms killed, 48- to 96-hour EC50s based upon percentage of organisms with incompletely developed shells, and 48-hour to 96-hour LC50s. (**Note:** If the minimum acute-chronic ratio data requirements (as described in section III.B.2 of this appendix) are not met with freshwater data alone, saltwater data may be used.)

3. It is preferred that the result of tests with all other aquatic animal species and older life stages of barnacles, bivalve molluscs (clams, mussels, oysters and scallops), sea urchins, lobsters, crabs, shrimp and abalones be the 96-hour EC50 based on percentage of organisms exhibiting loss of equilibrium plus percentage of organisms immobilized plus percentage of organisms killed. If such an EC50 is not available from a test, of the values that are available from a test the lower of the following should be used in place of the desired 96-hour EC50: the 96-hour EC50 based on percentage of organisms exhibiting loss of equilibrium plus percentage of organisms immobilized and the 96-hour LC50.

4. Tests whose results take into account the number of young produced, such as most tests with protozoans, are not considered acute tests, even if the duration was 96 hours or less.

5. If the tests were conducted properly, acute values reported as ''greater than'' values and those which are above the solubility of the test material should be used, because rejection of such acute values would bias the Final Acute Value by eliminating acute values for resistant species.

F. If the acute toxicity of the material to aquatic animals has been shown to be related to a water quality characteristic such as hardness or particulate matter for freshwater animals, refer to section V of this appendix.

G. The agreement of the data within and between species must be considered. Acute values that appear to be questionable in comparison with other acute and chronic data for the same species and for other species in the same genus must not be used. For example, if the acute values available for a species or genus differ by more than a factor of 10, rejection of some or all of the values would be appropriate, absent countervailing circumstances.

H. If the available data indicate that one or more life stages are at least a factor of two more resistant than one or more other life stages of the same species, the data for the more resistant life stages must not be used in the calculation of the SMAV because a species cannot be considered protected from acute toxicity if all of the life stages are not protected.

I. For each species for which at least one acute value is available, the SMAV shall be calculated as the geometric mean of the results of all acceptable flow-through acute toxicity tests in which the concentrations of test material were measured with the most sensitive tested life stage of the species. For a species for which no such result is available, the SMAV shall be calculated as the geometric mean of all acceptable acute toxicity tests with the most sensitive tested life stage, i.e., results of flow-through tests in which the concentrations were not measured and results of static and renewal tests based on initial concentrations (nominal concentrations are acceptable for most test materials if measured concentrations are not available) of test material. A renewal test is a test with aquatic organisms in which either the test solution in a test chamber is removed and replaced at least once during the test or the test organisms are transferred into a new test solution of the same composition at least once during the test. A static test is a test with aquatic organisms in which the solution

and organisms that are in a test chamber at the beginning of the test remain in the chamber until the end of the test, except for removal of dead test organisms.

Note 1: Data reported by original investigators must not be rounded off. Results of all intermediate calculations must not be rounded off to fewer than four significant digits.

Note 2: The geometric mean of N numbers is the Nth root of the product of the N numbers. Alternatively, the geometric mean can be calculated by adding the logarithms of the N numbers, dividing the sum by N, and taking the antilog of the quotient. The geometric mean of two numbers is the square root of the product of the two numbers, and the geometric mean of one number is that number. Either natural (base e) or common (base 10) logarithms can be used to calculate geometric means as long as they are used consistently within each set of data, i.e., the antilog used must match the logarithms used.

Note 3: Geometric means, rather than arithmetic means, are used here because the distributions of sensitivities of individual organisms in toxicity tests on most materials and the distributions of sensitivities of species within a genus are more likely to be lognormal than normal. Similarly, geometric means are used for ACRs because quotients are likely to be closer to lognormal than normal distributions. In addition, division of the geometric mean of a set of numerators by the geometric mean of the set of denominators will result in the geometric mean of the set of corresponding quotients.

J. For each genus for which one or more SMAVs are available, the GMAV shall be calculated as the geometric mean of the SMAVs available for the genus.

K. Order the GMAVs from high to low.

L. Assign ranks, R, to the GMAVs from ''1'' for the lowest to ''N'' for the highest. If two or more GMAVs are identical, assign them successive ranks.

M. Calculate the cumulative probability, P, for each GMAV as R/(N+1).

N. Select the four GMAVs which have cumulative probabilities closest to 0.05 (if there are fewer than 59 GMAVs, these will always be the four lowest GMAVs).

O. Using the four selected GMAVs, and Ps, calculate

$$S^2 = \frac{\sum\left((\ln \mathrm{GMAV})^2\right) - \frac{\left(\sum(\ln \mathrm{GMAV})\right)^2}{4}}{\sum(\mathrm{P}) - \frac{\left(\sum\left(\sqrt{\mathrm{P}}\right)\right)^2}{4}}$$

$$L = \frac{\sum(\ln \mathrm{GMAV}) - S\left(\sum\left(\sqrt{\mathrm{P}}\right)\right)}{4}$$

$$A = S\left(\sqrt{0.05}\right) + L$$

$$\mathrm{FAV} = e^{A}$$

Note: Natural logarithms (logarithms to base e, denoted as ln) are used herein merely because they are easier to use on some hand calculators and computers than common (base 10) logarithms. Consistent use of either will produce the same result.

P. If for a commercially or recreationally important species of the Great Lakes System the geometric mean of the acute values from flow-through tests in which the concentrations of test material were measured is lower than the calculated Final Acute Value (FAV), then that geometric mean must be used as the FAV instead of the calculated FAV.

Q. See section VI of this appendix.

V. Final Acute Equation

A. When enough data are available to show that acute toxicity to two or more species is similarly related to a water quality characteristic, the relationship shall be taken into account as described in sections V.B through V.G of this appendix or using analysis of covariance. The two methods are equivalent and produce identical results. The manual method described below provides an understanding of this application of covariance analysis, but computerized versions of covariance analysis are much more convenient for analyzing large data sets. If two or more factors affect toxicity, multiple regression analysis shall be used.

B. For each species for which comparable acute toxicity values are available at two or more different values of the water quality characteristic, perform a least squares regression of the acute toxicity values on the corresponding values of the water quality characteristic to obtain the slope and its 95 percent confidence limits for each species.

Note: Because the best documented relationship is that between hardness and acute toxicity of metals in fresh water and a log-log relationship fits these data, geometric means and natural logarithms of both toxicity and water quality are used in the rest of this section. For relationships based on other water quality characteristics, such as Ph, temperature, no transformation or a different transformation might fit the data better, and appropriate changes will be necessary throughout this section.

C. Decide whether the data for each species are relevant, taking into account the range and number of the tested values of the water quality characteristic and the degree of agreement within and between species. For example, a slope based on six data points might be of limited value if it is based only on data for a very narrow range of values of the water quality characteristic. A slope based on only two data points, however, might be useful if it is consistent with other information and if the two points cover a broad enough range of the water quality characteristic. In addition, acute values that appear to be questionable in comparison with other acute and chronic data available for the same species and for other species in the same genus should not be used. For example, if after adjustment for the water quality characteristic, the acute values available for a species or genus differ by more than a factor of 10, rejection of some or all of the values would be appropriate, absent countervailing justification. If useful slopes are not available for at least one fish and one invertebrate or if the available slopes are too dissimilar or if too few data are available to adequately define the relationship between acute toxicity and the water quality characteristic, return to section IV.G of this appendix, using the results of tests conducted under conditions and in waters similar to those commonly used for toxicity tests with the species.

D. For each species, calculate the geometric mean of the available acute values and then divide each of the acute values for the species by the geometric mean for the species. This normalizes the acute values so that the geometric mean of the normalized values for each species individually and for any combination of species is 1.0.

E. Similarly normalize the values of the water quality characteristic for each species individually using the same procedure as above.

F. Individually for each species perform a least squares regression of the normalized

acute values of the water quality characteristic. The resulting slopes and 95 percent confidence limits will be identical to those obtained in section V.B. of this appendix. If, however, the data are actually plotted, the line of best fit for each individual species will go through the point 1,1 in the center of the graph.

G. Treat all of the normalized data as if they were all for the same species and perform a least squares regression of all of the normalized acute values on the corresponding normalized values of the water quality characteristic to obtain the pooled acute slope, V, and its 95 percent confidence limits. If all of the normalized data are actually plotted, the line of best fit will go through the point 1,1 in the center of the graph.

H. For each species calculate the geometric mean, W, of the acute toxicity values and the geometric mean, X, of the values of the water quality characteristic. (These were calculated in sections V.D and V.E of this appendix).

I. For each species, calculate the logarithm, Y, of the SMAV at a selected value, Z, of the water quality characteristic using the equation:

$$Y=\ln W-V(\ln X-\ln Z)$$

J. For each species calculate the SMAV at X using the equation:

$$SMAV=e^{Y}$$

Note: Alternatively, the SMAVs at Z can be obtained by skipping step H above, using the equations in steps I and J to adjust each acute value individually to Z, and then calculating the geometric mean of the adjusted values for each species individually. This alternative procedure allows an examination of the range of the adjusted acute values for each species.

K. Obtain the FAV at Z by using the procedure described in sections IV.J through IV.O of this appendix.

L. If, for a commercially or recreationally important species of the Great Lakes System the geometric mean of the acute values at Z from flow-through tests in which the concentrations of the test material were measured is lower than the FAV at Z, then the geometric mean must be used as the FAV instead of the FAV.

M. The Final Acute Equation is written as:

$$FAV=e^{(V[\ln(\text{water quality characteristic})]+A-V[\ln Z])},$$

where:

V=pooled acute slope, and A=ln(FAV at Z).

Because V, A, and Z are known, the FAV can be calculated for any selected value of the water quality characteristic.

VI. Final Chronic Value

A. Depending on the data that are available concerning chronic toxicity to aquatic animals, the Final Chronic Value (FCV) can be calculated in the same manner as the FAV or by dividing the FAV by the Final Acute-Chronic Ratio (FACR). In some cases, it might not be possible to calculate a FCV. The FCV is (a) a calculated estimate of the concentration of a test material such that 95 percent of the genera (with which acceptable chronic toxicity tests have been conducted on the material) have higher GMCVs, or (b) the quotient of an FAV divided by an appropriate ACR, or (c) the SMCV of an important and/or critical species, if the SMCV is lower than the calculated estimate or the quotient, whichever is applicable.

Note: As the name implies, the ACR is a way of relating acute and chronic toxicities.

B. Chronic values shall be based on results of flow-through (except renewal is acceptable for daphnids) chronic tests in which the concentrations of test material in the test solutions were properly measured at appropriate times during the test. A chronic test is a comparative study in which organisms, that are subjected to different treatments, are observed for a long period or a substantial portion of their life span.

C. Results of chronic tests in which survival, growth, or reproduction in the control treatment was unacceptably low shall not be used. The limits of acceptability will depend on the species.

D. Results of chronic tests conducted in unusual dilution water, e.g., dilution water in which total organic carbon or particulate matter exceeded five mg/L, should not be used, unless a relationship is developed between chronic toxicity and organic carbon or particulate matter, or unless data show that organic carbon, particulate matter, etc., do not affect toxicity.

E. Chronic values must be based on endpoints and lengths of exposure appropriate to the species. Therefore, only results of the following kinds of chronic toxicity tests shall be used:

1. Life-cycle toxicity tests consisting of exposures of each of two or more groups of individuals of a species to a different concentration of the test material throughout a life cycle. To ensure that all life stages and life processes are exposed, tests with fish should begin with embryos or newly hatched young less than 48 hours old, continue through maturation and reproduction, and should end not less than 24 days (90 days for salmonids) after the hatching of the next generation. Tests with daphnids should begin with young less than 24 hours old and last for not less than 21 days, and for ceriodaphnids not less than seven days. For good examples of acceptable procedures see American Society for Testing and Materials (ASTM) Standard E 1193 Guide for conducting renewal life-cycle toxicity tests with *Daphnia magna* and ASTM Standard E 1295 Guide for conducting three-brood, renewal toxicity tests with *Ceriodaphnia dubia*. Tests with mysids should begin with young less than 24 hours old and continue until seven days past the median time of first brood release in the controls. For fish, data should be obtained and analyzed on survival and growth of adults and young, maturation of males and females, eggs spawned per female, embryo viability (salmonids only), and hatchability. For daphnids, data should be obtained and analyzed on survival and young per female. For mysids, data should be obtained and analyzed on survival, growth, and young per female.

2. Partial life-cycle toxicity tests consist of exposures of each of two more groups of individuals of a species of fish to a different concentration of the test material through most portions of a life cycle. Partial life-cycle tests are allowed with fish species that require more than a year to reach sexual maturity, so that all major life stages can be exposed to the test material in less than 15 months. A life-cycle test is a comparative study in which organisms, that are subjected to different treatments, are observed at least from a life stage in one generation to the same life-stage in the next generation. Exposure to the test material should begin with immature juveniles at least two months prior to active gonad development, continue through maturation and reproduction, and end not less than 24 days (90 days for salmonids) after the hatching of the next generation. Data should be obtained and analyzed on survival and growth of adults and young, maturation of males and females, eggs spawned per female, embryo viability (salmonids only), and hatchability.

3. Early life-stage toxicity tests consisting of 28- to 32-day (60 days post hatch for salmonids) exposures of the early life stages of a species of fish from shortly after fertilization through embryonic, larval, and early juvenile development. Data should be obtained and analyzed on survival and growth.

Note: Results of an early life-stage test are used as predictions of results of life-cycle and partial life-cycle tests with the same species. Therefore, when results of a life-cycle or partial life-cycle test are available, results of an early life-stage test with the same species should not be used. Also, results of early life-stage tests in which the incidence of mortalities or abnormalities increased substantially near the end of the test shall not be used because the results of such tests are possibly not good predictions of comparable life-cycle or partial life-cycle tests.

F. A chronic value may be obtained by calculating the geometric mean of the lower and upper chronic limits from a chronic test or by analyzing chronic data using regression analysis.

1. A lower chronic limit is the highest tested concentration:

a. In an acceptable chronic test;

b. Which did not cause an unacceptable amount of adverse effect on any of the specified biological measurements; and

c. Below which no tested concentration caused an unacceptable effect.

2. An upper chronic limit is the lowest tested concentration:

a. In an acceptable chronic test;

b. Which did cause an unacceptable amount of adverse effect on one or more of the specified biological measurements; and,

c. Above which all tested concentrations also caused such an effect.

Note: Because various authors have used a variety of terms and definitions to interpret and report results of chronic tests, reported results should be reviewed carefully. The amount of effect that is considered unacceptable is often based on a statistical hypothesis test, but might also be defined in terms of a specified percent reduction from the controls. A small percent reduction (e.g., three percent) might be considered acceptable even if it is statistically significantly different from the control, whereas a large percent reduction (e.g., 30 percent) might be considered unacceptable even if it is not statistically significant.

G. If the chronic toxicity of the material to aquatic animals has been shown to be related

to a water quality characteristic such as hardness or particulate matter for freshwater animals, refer to section VII of this appendix.

H. If chronic values are available for species in eight families as described in section III.B.1 of this appendix, a SMCV shall be calculated for each species for which at least one chronic value is available by calculating the geometric mean of the results of all acceptable life-cycle and partial life-cycle toxicity tests with the species; for a species of fish for which no such result is available, the SMCV is the geometric mean of all acceptable early life-stage tests. Appropriate GMCVs shall also be calculated. A GMCV is the geometric mean of the SMCVs for the genus. The FCV shall be obtained using the procedure described in sections IV.J through IV.O of this appendix, substituting SMCV and GMCV for SMAV and GMAV respectively. See section VI.M of this appendix.

Note: Section VI.I through VI.L are for use when chronic values are not available for species in eight taxonomic families as described in section III.B.1 of this appendix.

I. For each chronic value for which at least one corresponding appropriate acute value is available, calculate an ACR, using for the numerator the geometric mean of the results of all acceptable flow-through (except static is acceptable for daphnids and midges) acute tests in the same dilution water in which the concentrations are measured. For fish, the acute test(s) should be conducted with juveniles. The acute test(s) should be part of the same study as the chronic test. If acute tests were not conducted as part of the same study, but were conducted as part of a different study in the same laboratory and dilution water, then they may be used. If no such acute tests are available, results of acute tests conducted in the same dilution water in a different laboratory may be used. If no such acute tests are available, an ACR shall not be calculated.

J. For each species, calculate the SMACR as the geometric mean of all ACRs available for that species. If the minimum ACR data requirements (as described in section III.B.2 of this appendix) are not met with freshwater data alone, saltwater data may be used along with the freshwater data.

K. For some materials, the ACR seems to be the same for all species, but for other materials the ratio seems to increase or decrease as the SMAV increases. Thus the FACR can be obtained in three ways, depending on the data available:

1. If the species mean ACR seems to increase or decrease as the SMAVs increase, the FACR shall be calculated as the geometric mean of the ACRs for species whose SMAVs are close to the FAV.

2. If no major trend is apparent and the ACRs for all species are within a factor of ten, the FACR shall be calculated as the geometric mean of all of the SMACRs.

3. If the most appropriate SMACRs are less than 2.0, and especially if they are less than 1.0, acclimation has probably occurred during the chronic test. In this situation, because continuous exposure and acclimation cannot be assured to provide adequate protection in field situations, the FACR should be assumed to be two, so that the FCV is equal to the Criterion Maximum Concentration (CMC). (See section X.B of this appendix.)

If the available SMACRs do not fit one of these cases, a FACR may not be obtained and a Tier I FCV probably cannot be calculated.

L. Calculate the FCV by dividing the FAV by the FACR.

FCV=FAV÷FACR

If there is a Final Acute Equation rather than a FAV, see also section V of this appendix.

M. If the SMCV of a commercially or recreationally important species of the Great Lakes System is lower than the calculated FCV, then that SMCV must be used as the FCV instead of the calculated FCV.

N. See section VIII of this appendix.

VII. Final Chronic Equation

A. A Final Chronic Equation can be derived in two ways. The procedure described in section VII.A of this appendix will result in the chronic slope being the same as the acute slope. The procedure described in sections VII.B through N of this appendix will usually result in the chronic slope being different from the acute slope.

1. If ACRs are available for enough species at enough values of the water quality characteristic to indicate that the ACR appears to be the same for all species and appears to be independent of the water quality characteristic, calculate the FACR as the geometric mean of the available SMACRs.

2. Calculate the FCV at the selected value Z of the water quality characteristic by dividing the FAV at Z (see section V.M of this appendix) by the FACR.

3. Use V=pooled acute slope (see section V.M of this appendix), and

L=pooled chronic slope.

4. See section VII.M of this appendix.

B. When enough data are available to show that chronic toxicity to at least one species is related to a water quality characteristic, the relationship should be taken into account as described in sections C through G below or using analysis of covariance. The two methods are equivalent and produce identical results. The manual method described below provides an understanding of this application of covariance analysis, but computerized versions of covariance analysis are much more convenient for analyzing large data sets. If two or more factors affect toxicity, multiple regression analysis shall be used.

C. For each species for which comparable chronic toxicity values are available at two or more different values of the water quality characteristic, perform a least squares regression of the chronic toxicity values on the corresponding values of the water quality characteristic to obtain the slope and its 95 percent confidence limits for each species.

Note: Because the best documented relationship is that between hardness and acute toxicity of metals in fresh water and a log-log relationship fits these data, geometric means and natural logarithms of both toxicity and water quality are used in the rest of this section. For relationships based on other water quality characteristics, such as Ph, temperature, no transformation or a different transformation might fit the data better, and appropriate changes will be necessary throughout this section. It is probably preferable, but not necessary, to use the same transformation that was used with the acute values in section V of this appendix.

D. Decide whether the data for each species are relevant, taking into account the range and number of the tested values of the water quality characteristic and the degree of agreement within and between species. For example, a slope based on six data points might be of limited value if it is based only on data for a very narrow range of values of the water quality characteristic. A slope based on only two data points, however, might be more useful if it is consistent with other information and if the two points cover a broad range of the water quality characteristic. In addition, chronic values that appear to be questionable in comparison with other acute and chronic data available for the same species and for other species in the same genus in most cases should not be used. For example, if after adjustment for the water quality characteristic, the chronic values available for a species or genus differ by more than a factor of 10, rejection of some or all of the values is, in most cases, absent countervailing circumstances, appropriate. If a useful chronic slope is not available for at least one species or if the available slopes are too dissimilar or if too few data are available to adequately define the relationship between chronic toxicity and the water quality characteristic, it might be appropriate to assume that the chronic slope is the same as the acute slope, which is equivalent to assuming that the ACR is independent of the water quality characteristic. Alternatively, return to section VI.H of this appendix, using the results of tests conducted under conditions and in waters similar to those commonly used for toxicity tests with the species.

E. Individually for each species, calculate the geometric mean of the available chronic values and then divide each chronic value for a species by the mean for the species. This normalizes the chronic values so that the geometric mean of the normalized values for each species individually, and for any combination of species, is 1.0.

F. Similarly, normalize the values of the water quality characteristic for each species individually.

G. Individually for each species, perform a least squares regression of the normalized chronic toxicity values on the corresponding normalized values of the water quality characteristic. The resulting slopes and the 95 percent confidence limits will be identical to those obtained in section VII.B of this appendix. Now, however, if the data are actually plotted, the line of best fit for each individual species will go through the point 1,1 in the center of the graph.

H. Treat all of the normalized data as if they were all the same species and perform a least squares regression of all of the normalized chronic values on the corresponding normalized values of the water quality characteristic to obtain the pooled chronic slope, L, and its 95 percent confidence limits.

If all normalized data are actually plotted, the line of best fit will go through the point 1,1 in the center of the graph.

I. For each species, calculate the geometric mean, M, of the toxicity values and the geometric mean, P, of the values of the water quality characteristic. (These are calculated in sections VII.E and F of this appendix.)

J. For each species, calculate the logarithm, Q, of the SMCV at a selected value, Z, of the water quality characteristic using the equation:

$$Q = \ln M - L(\ln P - \ln Z)$$

Note: Although it is not necessary, it is recommended that the same value of the water quality characteristic be used here as was used in section V of this appendix.

K. For each species, calculate a SMCV at Z using the equation:

$$SMCV = e^{Q}$$

Note: Alternatively, the SMCV at Z can be obtained by skipping section VII.J of this appendix, using the equations in sections VII.J and K of this appendix to adjust each chronic value individually to Z, and then calculating the geometric means of the adjusted values for each species individually. This alternative procedure allows an examination of the range of the adjusted chronic values for each species.

L. Obtain the FCV at Z by using the procedure described in sections IV.J through O of this appendix.

M. If the SMCV at Z of a commercially or recreationally important species of the Great Lakes System is lower than the calculated FCV at Z, then that SMCV shall be used as the FCV at Z instead of the calculated FCV.

N. The Final Chronic Equation is written as:

$$FCV = e^{(L[\ln(\text{water quality characteristic})] + \ln S - L[\ln Z])}$$

Where:

L=pooled chronic slope and S = FCV at Z.

Because L, S, and Z are known, the FCV can be calculated for any selected value of the water quality characteristic.

VIII. Final Plant Value

A. A Final Plant Value (FPV) is the lowest plant value that was obtained with an important aquatic plant species in an acceptable toxicity test for which the concentrations of the test material were measured and the adverse effect was biologically important. Appropriate measures of the toxicity of the material to aquatic plants are used to compare the relative sensitivities of aquatic plants and animals. Although procedures for conducting and interpreting the results of toxicity tests with plants are not well-developed, results of tests with plants usually indicate that criteria which adequately protect aquatic animals and their uses will, in most cases, also protect aquatic plants and their uses.

B. A plant value is the result of a 96-hour test conducted with an alga or a chronic test conducted with an aquatic vascular plant.

Note: A test of the toxicity of a metal to a plant shall not be used if the medium contained an excessive amount of a complexing agent, such as EDTA, that might affect the toxicity of the metal. Concentrations of EDTA above 200 µg/L should be considered excessive.

C. The FPV shall be obtained by selecting the lowest result from a test with an important aquatic plant species in which the concentrations of test material are measured and the endpoint is biologically important.

IX. Other Data

Pertinent information that could not be used in earlier sections might be available concerning adverse effects on aquatic organisms. The most important of these are data on cumulative and delayed toxicity, reduction in survival, growth, or reproduction, or any other adverse effect that has been shown to be biologically important. Delayed toxicity is an adverse effect to an organism that results from, and occurs after the end of, its exposure to one or more test materials. Especially important are data for species for which no other data are available. Data from behavioral, biochemical, physiological, microcosm, and field studies might also be available. Data might be available from tests conducted in unusual dilution water (see sections IV.D and VI.D of this appendix), from chronic tests in which the concentrations were not measured (see section VI.B of this appendix), from tests with previously exposed organisms (see section II.F.3 of this appendix), and from tests on formulated mixtures or emulsifiable concentrates (see section II.D of this appendix). Such data might affect a criterion if the data were obtained with an important species, the test concentrations were measured, and the endpoint was biologically important.

X. Criterion

A. A criterion consists of two concentrations: the CMC and the Criterion Continuous Concentration (CCC).

B. The CMC is equal to one-half the FAV. The CMC is an estimate of the highest concentration of a material in the water column to which an aquatic community can be exposed briefly without resulting in an unacceptable effect.

C. The CCC is equal to the lowest of the FCV or the FPV (if available) unless other data (see section IX of this appendix) show that a lower value should be used. The CCC is an estimate of the highest concentration of a material in the water column to which an aquatic community can be exposed indefinitely without resulting in an unacceptable effect. If toxicity is related to a water quality characteristic, the CCC is obtained from the Final Chronic Equation or FPV (if available) that results in the lowest concentrations in the usual range of the water quality characteristic, unless other data (see section IX) show that a lower value should be used.

D. Round both the CMC and the CCC to two significant digits.

E. The criterion is stated as:

The procedures described in the Tier I methodology indicate that, except possibly where a commercially or recreationally important species is very sensitive, aquatic organisms should not be affected unacceptably if the four-day average concentration of (1) does not exceed (2) µg/L more than once every three years on the average and if the one-hour average concentration does not exceed (3) µg/L more than once every three years on the average.

Where:

(1) = insert name of material
(2) = insert the CCC
(3) = insert the CMC

If the CMC averaging period of one hour or the CCC averaging period of four days is inappropriate for the pollutant, or if the once-in-three-year allowable excursion frequency is inappropriate for the pollutant or for the sites to which a criterion is applied, then the State may specify alternative averaging periods or frequencies. The choice of an alternative averaging period or frequency shall be justified by a scientifically defensible analysis demonstrating that the alternative values will protect the aquatic life uses of the water. Appropriate laboratory data and/or well-designed field biological surveys shall be submitted to EPA as justification for differing averaging periods and/or frequencies of exceedance.

XI. Final Review

A. The derivation of the criterion should be carefully reviewed by rechecking each step of the Guidance in this part. Items that should be especially checked are:

1. If unpublished data are used, are they well documented?
2. Are all required data available?
3. Is the range of acute values for any species greater than a factor of 10?
4. Is the range of SMAVs for any genus greater than a factor of 10?
5. Is there more than a factor of 10 difference between the four lowest GMAVs?
6. Are any of the lowest GMAVs questionable?
7. Is the FAV reasonable in comparison with the SMAVs and GMAVs?
8. For any commercially or recreationally important species of the Great Lakes System, is the geometric mean of the acute values from flow-through tests in which the concentrations of test material were measured lower than the FAV?
9. Are any of the chronic values used questionable?
10. Are any chronic values available for acutely sensitive species?
11. Is the range of acute-chronic ratios greater than a factor of 10?
12. Is the FCV reasonable in comparison with the available acute and chronic data?
13. Is the measured or predicted chronic value for any commercially or recreationally important species of the Great Lakes System below the FCV?
14. Are any of the other data important?
15. Do any data look like they might be outliers?
16. Are there any deviations from the Guidance in this part? Are they acceptable?

B. On the basis of all available pertinent laboratory and field information, determine if the criterion is consistent with sound scientific evidence. If it is not, another criterion, either higher or lower, shall be derived consistent with the Guidance in this part.

Methodology for Deriving Aquatic Life Values: Tier II

XII. Secondary Acute Value

If all eight minimum data requirements for calculating an FAV using Tier I are not met, a Secondary Acute Value (SAV) for the waters of the Great Lakes System shall be calculated for a chemical as follows:

To calculate a SAV, the lowest GMAV in the database is divided by the Secondary Acute Factor (SAF) (Table A–1 of this appendix) corresponding to the number of satisfied minimum data requirements listed in the Tier I methodology (section III.B.1 of this appendix). (Requirements for definitions, data collection and data review, contained in sections I, II, and IV shall be applied to calculation of a SAV.) If all eight minimum data requirements are satisfied, a Tier I criterion calculation may be possible. In order to calculate a SAV, the database must contain, at a minimum, a genus mean acute value (GMAV) for one of the following three genera in the family Daphnidae—*Ceriodaphnia sp., Daphnia sp.,* or *Simocephalus sp.*

If appropriate, the SAV shall be made a function of a water quality characteristic in a manner similar to that described in Tier I.

XIII. Secondary Acute-Chronic Ratio

If three or more experimentally determined ACRs, meeting the data collection and review requirements of Section VI of this appendix, are available for the chemical, determine the FACR using the procedure described in Section VI. If fewer than three acceptable experimentally determined ACRs are available, use enough assumed ACRs of 18 so that the total number of ACRs equals three. Calculate the Secondary Acute-Chronic Ratio (SACR) as the geometric mean of the three ACRs. Thus, if no experimentally determined ACRs are available, the SACR is 18.

XIV. Secondary Chronic Value

Calculate the Secondary Chronic Value (SCV) using one of the following:

$$\text{A.}\quad SCV = \frac{FAV}{SACR}\ (\text{use FAV from Tier I})$$

$$\text{B.}\quad SCV = \frac{SAV}{FACR}$$

$$\text{C.}\quad SCV = \frac{SAV}{SACR}$$

If appropriate, the SCV will be made a function of a water quality characteristic in a manner similar to that described in Tier I.

XV. Commercially or Recreationally Important Species

If for a commercially or recreationally important species of the Great Lakes System the geometric mean of the acute values or chronic values from flow-through tests in which the concentrations of the test materials were measured is lower than the calculated SAV or SCV, then that geometric mean must be used as the SAV or SCV instead of the calculated SAV or SCV.

XVI. Tier II Value

A. A Tier II value shall consist of two concentrations: the Secondary Maximum Concentration (SMC) and the Secondary Continuous Concentration (SCC).

B. The SMC is equal to one-half of the SAV.

C. The SCC is equal to the lowest of the SCV or the Final Plant Value, if available, unless other data (see section IX of this appendix) show that a lower value should be used.

If toxicity is related to a water quality characteristic, the SCC is obtained from the Secondary Chronic Equation or FPV, if available, that results in the lowest concentrations in the usual range of the water quality characteristic, unless other data (See section IX of this appendix) show that a lower value should be used.

D. Round both the SMC and the SCC to two significant digits.

E. The Tier II value is stated as:

The procedures described in the Tier II methodology indicate that, except possibly where a locally important species is very sensitive, aquatic organisms should not be affected unacceptably if the four-day average concentration of (1) does not exceed (2) µg/L more than once every three years on the average and if the one-hour average concentration does not exceed (3) µg/L more than once every three years on the average.

Where:

(1) = insert name of material
(2) = insert the SCC
(3) = insert the SMC

As discussed above, States and Tribes have the discretion to specify alternative averaging periods or frequencies (see section X.E. of this appendix).

XVII. Appropriate Modifications

On the basis of all available pertinent laboratory and field information, determine if the Tier II value is consistent with sound scientific evidence. If it is not, another value, either higher or lower, shall be derived consistent with the Guidance in this part.

TABLE A–1.— SECONDARY ACUTE FACTORS

Number of minimum data requirements satisfied	Adjustment factor
1	21.9
2	13.0
3	8.0
4	7.0
5	6.1
6	5.2
7	4.3

Appendix B to Part 132—Great Lakes Water Quality Initiative

Methodology for Deriving Bioaccumulation Factors

Great Lakes States and Tribes shall adopt provisions consistent with (as protective as) this appendix.

I. Introduction

A. The purpose of this methodology is to describe procedures for deriving bioaccumulation factors (BAFs) to be used in the calculation of Great Lakes Water Quality Guidance (Guidance) human health Tier I criteria and Tier II values and wildlife Tier I criteria. A subset of the human health BAFs are also used to identify the chemicals that are considered bioaccumulative chemicals of concern (BCCs).

B. Bioaccumulation reflects uptake of a substance by aquatic organisms exposed to the substance through all routes (i.e., ambient water and food), as would occur in nature. Bioconcentration reflects uptake of a substance by aquatic organisms exposed to the substance only through the ambient water. Both BAFs and bioconcentration factors (BCFs) are proportionality constants that describe the relationship between the concentration of a substance in aquatic organisms and its concentration in the ambient water. For the Guidance in this part, BAFs, rather than BCFs, are used to calculate Tier I criteria for human health and wildlife and Tier II values for human health because they better account for the total exposure of aquatic organisms to chemicals.

C. For organic chemicals, baseline BAFs can be derived using four methods. Measured baseline BAFs are derived from field-measured BAFs; predicted baseline BAFs are derived using biota-sediment accumulation factors (BSAFs) or are derived by multiplying a laboratory-measured or predicted BCF by a food-chain multiplier (FCM). The lipid content of the aquatic organisms is used to account for partitioning of organic chemicals within organisms so that data from different

tissues and species can be integrated. In addition, the baseline BAF is based on the concentration of freely dissolved organic chemicals in the ambient water to facilitate extrapolation from one water to another.

D. For inorganic chemicals, baseline BAFs can be derived using two of the four methods. Baseline BAFs are derived using either field-measured BAFs or by multiplying laboratory-measured BCFs by a FCM. For inorganic chemicals, BAFs are assumed to equal BCFs (i.e., the FCM is 1.0), unless chemical-specific biomagnification data support using a FCM other than 1.0.

E. Because both humans and wildlife consume fish from both trophic levels 3 and 4, two baseline BAFs are needed to calculate either a human health criterion or value or a wildlife criterion for a chemical. When appropriate, ingestion through consumption of invertebrates, plants, mammals, and birds in the diet of wildlife species to be protected may be taken into account.

II. Definitions

Baseline BAF. For organic chemicals, a BAF that is based on the concentration of freely dissolved chemical in the ambient water and takes into account the partitioning of the chemical within the organism; for inorganic chemicals, a BAF that is based on the wet weight of the tissue.

Baseline BCF. For organic chemicals, a BCF that is based on the concentration of freely dissolved chemical in the ambient water and takes into account the partitioning of the chemical within the organism; for inorganic chemicals, a BCF that is based on the wet weight of the tissue.

Bioaccumulation. The net accumulation of a substance by an organism as a result of uptake from all environmental sources.

Bioaccumulation factor (BAF). The ratio (in L/kg) of a substance's concentration in tissue of an aquatic organism to its concentration in the ambient water, in situations where both the organism and its food are exposed to and the ratio does not change substantially over time.

Bioconcentration. The net accumulation of a substance by an aquatic organism as a result of uptake directly from the ambient water through gill membranes or other external body surfaces.

Bioconcentration factor (BCF). The ratio (in L/kg) of a substance's concentration in tissue of an aquatic organism to its concentration in the ambient water, in situations where the organism is exposed through the water only and the ratio does not change substantially over time.

Biota-sediment accumulation factor (BSAF). The ratio (in kg of organic carbon/kg of lipid) of a substance's lipid-normalized concentration in tissue of an aquatic organism to its organic carbon-normalized concentration in surface sediment, in situations where the ratio does not change substantially over time, both the organism and its food are exposed, and the surface sediment is representative of average surface sediment in the vicinity of the organism.

Depuration. The loss of a substance from an organism as a result of any active or passive process.

Food-chain multiplier (FCM). The ratio of a BAF to an appropriate BCF.

Octanol-water partition coefficient (K_{OW}). The ration of the concentration of a substance in the n-octanol phase to its concentration in the aqueous phase in an equilibrated two-phase octanol-water system. For log K_{OW}, the log of the octanol-water partition coefficient is a base 10 logarithm.

Uptake. Acquisition of a substance from the environment by an organism as a result of any active or passive process.

III. Review and Selection of Data

A. *Data Sources.* Measured BAFs, BSAFs and BCFs are assembled from available sources including the following:

1. EPA Ambient Water Quality Criteria documents issued after January 1, 1980.
2. Published scientific literature.
3. Reports issued by EPA or other reliable sources.
4. Unpublished data.

One useful source of references is the Aquatic Toxicity Information Retrieval (AQUIRE) database.

B. *Field-Measured BAFs.* The following procedural and quality assurance requirements shall be met for field-measured BAFs:

1. The field studies used shall be limited to those conducted in the Great Lakes System with fish at or near the top of the aquatic food chain (i.e., in trophic levels 3 and/or 4).
2. The trophic level of the fish species shall be determined.
3. The site of the field study should not be so unique that the BAF cannot be extrapolated to other locations where the criteria and values will apply.
4. For organic chemicals, the percent lipid shall be either measured or reliably estimated for the tissue used in the determination of the BAF.
5. The concentration of the chemical in the water shall be measured in a way that can be related to particulate organic carbon (POC) and/or dissolved organic carbon (DOC) and should be relatively constant during the steady-state time period.
6. For organic chemicals with log K_{ow} greater than four, the concentrations of POC and DOC in the ambient water shall be either measured or reliably estimated.
7. For inorganic and organic chemicals, BAFs shall be used only if they are expressed on a wet weight basis; BAFs reported on a dry weight basis cannot be converted to wet weight unless a conversion factor is measured or reliably estimated for the tissue used in the determination of the BAF.

C. *Field-Measured BSAFs.* The following procedural and quality assurance requirements shall be met for field-measured BSAFs:

1. The field studies used shall be limited to those conducted in the Great Lakes System with fish at or near the top of the aquatic food chain (i.e., in trophic levels 3 and/or 4).
2. Samples of surface sediments (0–1 cm is ideal) shall be from locations in which there is net deposition of fine sediment and is representative of average surface sediment in the vicinity of the organism.
3. The K_{ow}s used shall be acceptable quality as described in section III.F below.
4. The site of the field study should not be so unique that the resulting BAF cannot be extrapolated to other locations where the criteria and values will apply.
5. The tropic level of the fish species shall be determined.
6. The percent lipid shall be either measured or reliably estimated for the tissue used in the determination of the BAF.

D. *Laboratory-Measured BCFs.* The following procedural and quality assurance requirements shall be met for laboratory-measured BCFs:

1. The test organism shall not be diseased, unhealthy, or adversely affected by the concentration of the chemical.
2. The total concentration of the chemical in the water shall be measured and should be relatively constant during the steady-state time period.
3. The organisms shall be exposed to the chemical using a flow-through or renewal procedure.
4. For organic chemicals, the percent lipid shall be either measured or reliably estimated for the tissue used in the determination of the BCF.
5. For organic chemicals with log K_{ow} greater than four, the concentrations of POC and DOC in the test solution shall be either measured or reliably estimated.
6. Laboratory-measured BCFs should be determined using fish species, but BCFs determined with molluscs and other invertebrates may be used with caution. For example, because invertebrates metabolize some chemicals less efficiently than vertebrates, a baseline BCF determined for such a chemical using invertebrates is expected to be higher than a comparable baseline BCF determined using fish.
7. If laboratory-measured BCFs increase or decrease as the concentration of the chemical increases in the test solutions in a bioconcentration test, the BCF measured at the lowest test concentration that is above concentrations existing in the control water shall be used (i.e., a BCF should be calculated from a control treatment). The concentrations of an inorganic chemical in a bioconcentration test should be greater than normal background levels and greater than levels required for normal nutrition of the test species if the chemical is a micronutrient, but below levels that adversely affect the species. Bioaccummulation of an inorganic chemical might be overestimated if concentrations are at or below normal background levels due to, for example, nutritional requirements of the test organisms.
8. For inorganic and organic chemicals, BCFs shall be used only if they are expressed on a wet weight basis. BCFs reported on a dry weight basis cannot be converted to wet weight unless a conversion factor is measured or reliably estimated for the tissue used in the determination of the BAF.
9. BCFs for organic chemicals may be based on measurement or radioactivity only when the BCF is intended to include metabolites or when there is confidence that there is no interference due to metabolites.
10. The calculation of the BCF must appropriately address growth dilution.
11. Other aspects of the methodology used should be similar to those described by ASTM (1990).

E. *Predicted BCFs.* The following procedural and quality assurance requirements shall be met for predicted BCFs:

1. The K_{ow} used shall be of acceptable quality as described in section III.F below.

2. The predicted baseline BCF shall be calculated using the equation: predicted baseline BCF = K_{ow}

where:

K_{ow} = octanol-water partition coefficient.

F. *Octanol-Water Partition Coefficient (K_{ow}).* 1. The value of K_{ow} used for an organic chemical shall be determined by giving priority to the experimental and computational techniques used as follows:

Log K_{ow} < 4:

Priority	Technique
1	Slow-stir.
1	Generator-column.
1	Shake-flask.
2	Reverse-phase liquid chromatography on C18 chromatography packing with extrapolation to zero percent solvent.
3	Reverse-phase liquid chromatography on C18 chromatography packing without extrapolation to zero percent solvent.
4	Calculated by the CLOGP program.

Log K_{ow} > 4:

Priority	Technique
1	Slow Stir.
1	Generator-column.
2	Reverse-phase liquid chromatography on C18 chromatography packing with extrapolation to zero percent solvent.
3	Reverse-phase liquid chromatography on C18 chromatography packing without extrapolation to zero percent solvent.
4	Shake-flask.
5	Calculated by the CLOGP program.

2. The CLOGP program is a computer program available from Pomona College. A value of K_{ow} that seems to be different from the others should be considered an outlier and not used. The value of K_{ow} used for an organic chemical shall be the geometric mean of the available K_{ow}s with highest priority or can be calculated from the arithmetic mean of the available log K_{ow} with the highest priority. Because it is an intermediate value in the derivation of a BAF, the value used for the K_{ow} of a chemical should not be rounded to fewer than three significant digits and a value for log K_{ow} should not be rounded to fewer than three significant digits after the decimal point.

G. This methodology provides overall guidance for the derivation of BAFs, but it cannot cover all the decisions that must be made in the review and selection of acceptable data. Professional judgment is required throughout the process. A degree of uncertainty is associated with the determination of any BAF, BSAF, BCF or K_{ow}. The amount of uncertainty in a baseline BAF depends on both the quality of data available and the method used to derive the BAF.

H. Hereinafter in this methodology, the terms BAF, BSAF, BCF and K_{ow} refer to ones that are consistent with the procedural and quality assurance requirements given above.

IV. Four Methods for Deriving Baseline BAFs

Baseline BAFs shall be derived using the following four methods, which are listed from most preferred to least preferred:

A. A measured baseline BAF for an organic or inorganic chemical derived from a field study of acceptable quality.

B. A predicted baseline BAF for an organic chemical derived using field-measured BSAFs of acceptable quality.

C. A predicted baseline BAF for an organic or inorganic chemical derived from a BCF measured in a laboratory study of acceptable quality and a FCM.

D. A predicted baseline BAF for an organic chemical derived from a K_{ow} of acceptable quality and a FCM.

For comparative purposes, baseline BAFs should be derived for each chemical by as many of the four methods as available data allow.

V. Calculation of Baseline BAFs for Organic Chemicals

A. *Lipid Normalization.* 1. It is assumed that BAFs and BCFs for organic chemicals can be extrapolated on the basis of percent lipid from one tissue to another and from one aquatic species to another in most cases.

2. Because BAFs and BCFs for organic chemicals are related to the percent lipid, it does not make any difference whether the tissue sample is whole body or edible portion, but both the BAF (or BCF) and the percent lipid must be determined for the same tissue. The percent lipid of the tissue should be measured during the BAF or BCF study, but in some cases it can be reliably estimated from measurements on tissue from other organisms. If percent lipid is not reported for the test organisms in the original study, it may be obtained from the author; or, in the case of a laboratory study, lipid data for the same or a comparable laboratory population of test organisms that were used in the original study may be used.

3. The lipid-normalized concentration, C_l, of a chemical in tissue is defined using the following equation:

$$C_l = \frac{C_B}{f_l}$$

Where:

C_B=concentration of the organic chemical in the tissue of aquatic biota (either whole organism or specified tissue) (μg/g).

f_l=fraction of the tissue that is lipid.

B. *Bioavailability.* By definition, baseline BAFs and BCFs for organic chemicals, whether measured or predicted are based on the concentration of the chemical that is freely dissolved in the ambient water in order to account for bioavailability. For the purposes of this Guidance in this part, the relationship between the total concentration of the chemical in the water (i.e., that which is freely dissolved plus that which is sorbed to particulate organic carbon or to dissolved organic carbon) to the freely dissolved concentration of the chemical in the ambient water shall be calculated using the following equation:

$$C_w^{fd} = \left(f_{fd}\right)\left(C_w^t\right)$$

Where:

C^{fd}_w=freely dissolved concentration of the organic chemical in the ambient water;

C^t_w=total concentration of the organic chemical in the ambient water;

f_{fd}=fraction of the total chemical in the ambient water that is freely dissolved.

The fraction of the total chemical in the ambient water that is freely dissolved, f_{fd}, shall be calculated using the following equation:

$$f_{fd} = \frac{1}{1 + \frac{(DOC)(K_{ow})}{10} + (POC)(K_{ow})}$$

Where:

DOC=concentration of dissolved organic carbon, kg of dissolved organic carbon/L of water.

K_{OW}=octanol-water partition coefficient of the chemical.

POC=concentration of particulate organic carbon, kg of particulate organic carbon/L of water.

C. *Food-Chain Multiplier.* In the absence of a field-measured BAF or a predicted BAF derived from a BSAF, a FCM shall be used to calculate the baseline BAF for trophic levels 3 and 4 from a laboratory-measured or predicted BCF. For an organic chemical, the FCM used shall be derived from Table B–1 using the chemical's log K_{OW} and linear interpolation. A FCM greater than 1.0 applies to most organic chemicals with a log K_{OW} of four or more. The trophic level used shall take into account the age or size of the fish species consumed by the human, avian or mammalian predator because, for some species of fish, the young are in trophic level 3 whereas the adults are in trophic level 4.

D. *Calculation of a Baseline BAF from a Field-Measured BAF.* A baseline BAF shall be calculated from a field-measured BAF of acceptable quality using the following equation:

$$\text{Baseline BAF} = \left[\frac{\text{Measured BAF}_T^t}{f_{fd}} - 1\right]\left[\frac{1}{f_l}\right]$$

Where:

BAF^t_T=BAF based on total concentration in tissue and water.

f_l=fraction of the tissue that is lipid.

f_{fd}=fraction of the total chemical that is freely dissolved in the ambient water.

The trophic level to which the baseline BAF applies is the same as the trophic level of the organisms used in the determination of the field-measured BAF. For each trophic level, a species mean measured baseline BAF shall be calculated as the geometric mean if more than one measured baseline BAF is available for a given species. For each trophic level, the geometric mean of the species mean measured baseline BAFs shall be calculated. If a baseline BAF based on a measured BAF is available for either trophic level 3 or 4, but not both, a measured baseline BAF for the other trophic level shall be calculated using the ratio of the FCMs that are obtained by linear interpolation from Table B–1 for the chemical.

E. *Calculation of a Baseline BAF from a Field-Measured BSAF.* 1. A baseline BAF for organic chemical ''i'' shall be calculated from a field-measured BSAF of acceptable quality using the following equation:

$$(\text{Baseline BAF})_i = (\text{Baseline BAF})_r \cdot \frac{(\text{BSAF})_i \cdot (K_{ow})_i}{(\text{BSAF})_r \cdot (K_{ow})_r}$$

Where:

$(BSAF)_i$=BSAF for chemical ''i''.

$(BSAF)_r$=BSAF for the reference chemical ''r''.

$(K_{OW})_i$=octanol-water partition coefficient for chemical ''i''.

$(K_{OW})_r$=octanol-water partition coefficient for the reference chemical ''r''.

2. A BSAF shall be calculated using the following equation:

$$\text{BSAF} = \frac{C_l}{C_{SOC}}$$

Where:

C_t=the lipid-normalized concentration of the chemical in tissue.

C_{SOC}=the organic carbon-normalized concentration of the chemical in sediment.

3. The organic carbon-normalized concentration of a chemical in sediment, C_{SOC}, shall be calculated using the following equation:

$$C_{SOC} = \frac{C_S}{f_{OC}}$$

Where:

C_S=concentration of chemical in sediment (µg/g sediment).

f_{OC}=fraction of the sediment that is organic carbon.

4. Predicting BAFs from BSAFs requires data from a steady-state (or near steady-state) condition between sediment and ambient water for both a reference chemical ''r'' with a field-measured BAF_l^{fd} and other chemicals ''n=i'' for which BSAFs are to be determined.

5. The trophic level to which the baseline BAF applies is the same as the trophic level of the organisms used in the determination of the BSAF. For each trophic level, a species mean baseline BAF shall be calculated as the geometric mean if more than one baseline BAF is predicted from BSAFs for a given species. For each trophic level, the geometric mean of the species mean baseline BAFs derived using BSAFs shall be calculated.

6. If a baseline BAF based on a measured BSAF is available for either trophic level 3 or 4, but not both, a baseline BAF for the other trophic level shall be calculated using the ratio of the FCMs that are obtained by linear interpolation from Table B–1 for the chemical.

F. *Calculation of a Baseline BAF from a Laboratory-Measured BCF.* A baseline BAF for trophic level 3 and a baseline BAF for trophic level 4 shall be calculated from a laboratory-measured BCF of acceptable quality and a FCM using the following equation:

$$\text{Baseline BAF} = (\text{FCM})\left[\frac{\text{Measured BCF}_T^t}{f_{fd}} - 1\right]\left[\frac{1}{f_l}\right]$$

Where:

BCF^t_T=BCF based on total concentration in tissue and water.

f_l=fraction of the tissue that is lipid.

f_{fd}=fraction of the total chemical in the test water that is freely dissolved.

FCM=the food-chain multiplier obtained from Table B–1 by linear interpolation for trophic level 3 or 4, as necessary.

For each trophic level, a species mean baseline BAF shall be calculated as the geometric mean if more than one baseline BAF is predicted from laboratory-measured BCFs for a given species. For each trophic level, the geometric mean of the species mean baseline BAFs based on laboratory-measured BCFs shall be calculated.

G. *Calculation of a Baseline BAF from an Octanol-Water Partition Coefficient.* A baseline BAF for trophic level 3 and a baseline BAF for trophic level 4 shall be calculated from a K_{OW} of acceptable quality and a FCM using the following equation:

Baseline BAF=(FCM) (predicted baseline BCF)=(FCM) (K_{OW})

Where:

FCM=the food-chain multiplier obtained from Table B–1 by linear interpolation for trophic level 3 or 4, as necessary.

K_{OW}=octanol-water partition coefficient.

VI. Human Health and Wildlife BAFs for Organic Chemicals

A. To calculate human health and wildlife BAFs for an organic chemical, the K_{OW} of the

chemical shall be used with a POC concentration of 0.00000004 kg/L and a DOC concentration of 0.000002 kg/L to yield the fraction freely dissolved:

$$f_{fd} = \frac{1}{1 + \frac{(DOC)(K_{ow})}{10} + (POC)(K_{ow})}$$

$$= \frac{1}{1 + \frac{(0.000002\ kg/L)(K_{ow})}{10} + (0.00000004\ kg/L)(K_{ow})}$$

$$= \frac{1}{1 + (0.00000024\ kg/L)(K_{ow})}$$

B. The human health BAFs for an organic chemical shall be calculated using the following equations:

For trophic level 3:

$$\text{Human Health BAF}_{TL3}^{HH} = [(\text{baseline BAF})(0.0182) + 1](f_{fd})$$

For trophic level 4:

$$\text{Human Health BAF}_{TL4}^{HH} = [(\text{baseline BAF})(0.0310) + 1](f_{fd})$$

Where:

0.0182 and 0.0310 are the standardized fraction lipid values for trophic levels 3 and 4, respectively, that are used to derive human health criteria and values for the GLI.

C. The wildlife BAFs for an organic chemical shall be calculated using the following equations:

For trophic level 3:

$$\text{Wildlife BAF}_{TL3}^{WL} = [(\text{baseline BAF})(0.0646) + 1](f_{fd})$$

For trophic level 4:

$$\text{Wildlife BAF}_{TL4}^{WL} = [(\text{baseline BAF})(0.1031) + 1](f_{fd})$$

Where:

0.0646 and 0.1031 are the standardized fraction lipid values for trophic levels 3 and 4, respectively, that are used to derive wildlife criteria for the GLI.

VII. Human Health and Wildlife BAFs for Inorganic Chemicals

A. For inorganic chemicals, the baseline BAFs for trophic levels 3 and 4 are both assumed to equal the BCF determined for the chemical with fish, i.e., the FCM is assumed to be 1 for both trophic levels 3 and 4. However, a FCM greater than 1 might be applicable to some metals, such as mercury, if, for example, an organometallic form of the metal biomagnifies.

B. *BAFs for Human Health Criteria and Values.*

1. Measured BAFs and BCFs used to determine human health BAFs for inorganic chemicals shall be based on edible tissue (e.g., muscle) of freshwater fish unless it is demonstrated that whole-body BAFs or BCFs are similar to edible-tissue BAFs or BCFs. BCFs and BAFs based on measurements of aquatic plants and invertebrates should not be used in the derivation of human health criteria and values.

2. If one or more field-measured baseline BAFs for an inorganic chemical are available from studies conducted in the Great Lakes System with the muscle of fish:

a. For each trophic level, a species mean measured baseline BAF shall be calculated as the geometric mean if more than one measured BAF is available for a given species; and

b. For each trophic level, the geometric mean of the species mean measured baseline BAFs shall be used as the human health BAF for that chemical.

3. If an acceptable measured baseline BAF is not available for an inorganic chemical and one or more acceptable edible-portion laboratory-measured BCFs are available for the chemical, a predicted baseline BAF shall be calculated by multiplying the geometric mean of the BCFs times a FCM. The FCM will be 1.0 unless chemical-specific biomagnification data support using a multiplier other than 1.0. The predicted baseline BAF shall be used as the human health BAF for that chemical.

C. *BAFs for Wildlife Criteria.*

1. Measured BAFs and BCFs used to determine wildlife BAFs for inorganic chemicals shall be based on whole-body freshwater fish and invertebrate data unless it is demonstrated that edible-tissue BAFs or BCFs are similar to whole-body BAFs or BCFs.

2. If one or more field-measured baseline BAFs for an inorganic chemical are available from studies conducted in the Great Lakes System with whole body of fish or invertebrates:

2. For each trophic level, a species mean measured baseline BAF shall be calculated as the geometric mean if more than one measured BAF is available for a given species.

b. For each trophic level, the geometric mean of the species mean measured baseline BAFs shall be used as the wildlife BAF for that chemical.

3. If an acceptable measured baseline BAF is not available for an inorganic chemical and one or more acceptable whole-body laboratory-measured BCFs are available for the chemical, a predicted baseline BAF shall be calculated by multiplying the geometric mean of the BCFs times a FCM. The FCM will be 1.0 unless chemical-specific biomagnification data support using a multiplier other than 1.0. The predicted baseline BAF shall be used as the wildlife BAF for that chemical.

VIII. Final Review

For both organic and inorganic chemicals, human health and wildlife BAFs for both trophic levels shall be reviewed for consistency with all available data concerning the bioaccumulation, bioconcentration, and metabolism of the chemical. For example, information concerning octanol-water partitioning, molecular size, or other physicochemical properties that might enhance or inhibit bioaccumulation should be considered for organic chemicals. BAFs derived in accordance with this methodology should be modified if changes are justified by available data.

IX. Literature Cited

ASTM. 1990. Standard Practice for Conducting Bioconcentration Tests with Fishes and Saltwater Bivalve Molluscs. Standard E 1022. American Society for Testing and Materials, Philadelphia, PA.

TABLE B–1.—FOOD-CHAIN MULTIPLIERS FOR TROPHIC LEVELS 2, 3 & 4

Log K_{ow}	Trophic level 2	Trophic[1] level 3	Trophic level 4
2.0	1.000	1.005	1.000
2.5	1.000	1.010	1.002
3.0	1.000	1.028	1.007
3.1	1.000	1.034	1.007
3.2	1.000	1.042	1.009
3.3	1.000	1.053	1.012
3.4	1.000	1.067	1.014
3.5	1.000	1.083	1.019
3.6	1.000	1.103	1.023
3.7	1.000	1.128	1.033
3.8	1.000	1.161	1.042
3.9	1.000	1.202	1.054
4.0	1.000	1.253	1.072
4.1	1.000	1.315	1.096
4.2	1.000	1.380	1.130
4.3	1.000	1.491	1.178
4.4	1.000	1.614	1.242
4.5	1.000	1.766	1.334
4.6	1.000	1.950	1.459
4.7	1.000	2.175	1.633
4.8	1.000	2.452	1.871
4.9	1.000	2.780	2.193
5.0	1.000	3.181	2.612
5.1	1.000	3.643	3.162
5.2	1.000	4.188	3.873
5.3	1.000	4.803	4.742
5.4	1.000	5.502	5.821
5.5	1.000	6.266	7.079
5.6	1.000	7.096	8.551
5.7	1.000	7.962	10.209
5.8	1.000	8.841	12.050
5.9	1.000	9.716	13.964
6.0	1.000	10.556	15.996
6.1	1.000	11.337	17.783
6.2	1.000	12.064	19.907
6.3	1.000	12.691	21.677
6.4	1.000	13.228	23.281
6.5	1.000	13.662	24.604
6.6	1.000	13.980	25.645
6.7	1.000	14.223	26.363
6.8	1.000	14.355	26.669
6.9	1.000	14.388	26.669
7.0	1.000	14.305	26.242
7.1	1.000	14.142	25.468
7.2	1.000	13.852	24.322
7.3	1.000	13.474	22.856
7.4	1.000	12.987	21.038
7.5	1.000	12.517	18.967
7.6	1.000	11.708	16.749
7.7	1.000	10.914	14.388
7.8	1.000	10.069	12.050
7.9	1.000	9.162	9.840
8.0	1.000	8.222	7.798
8.1	1.000	7.278	6.012

TABLE B–1.—FOOD-CHAIN MULTIPLIERS FOR TROPHIC LEVELS 2, 3 & 4—Continued

Log K_{ow}	Trophic level 2	Trophic[1] level 3	Trophic level 4
8.2	1.000	6.361	4.519
8.3	1.000	5.489	3.311
8.4	1.000	4.683	2.371
8.5	1.000	3.949	1.663
8.6	1.000	3.296	1.146
8.7	1.000	2.732	0.778
8.8	1.000	2.246	0.521
8.9	1.000	1.837	0.345
9.0	1.000	1.493	0.226

[1] The FCMs for trophic level 3 are the geometric mean of the FCMs for sculpin and alewife.

Appendix C to Part 132—Great Lakes Water Quality Initiative Methodologies for Development of Human Health Criteria and Values

Great Lakes States and Tribes shall adopt provisions consistent with (as protective as) this appendix.

I. Introduction

Great Lakes States and Tribes shall adopt provisions consistent with this appendix C to ensure protection of human health.

A. *Goal.* The goal of the human health criteria for the Great Lakes System is the protection of humans from unacceptable exposure to toxicants via consumption of contaminated fish and drinking water and from ingesting water as a result of participation in water-oriented recreational activities.

B. *Definitions.*

Acceptable daily exposure (ADE). An estimate of the maximum daily dose of a substance which is not expected to result in adverse noncancer effects to the general human population, including sensitive subgroups.

Adverse effect. Any deleterious effect to organisms due to exposure to a substance. This includes effects which are or may become debilitating, harmful or toxic to the normal functions of the organism, but does not include non-harmful effects such as tissue discoloration alone or the induction of enzymes involved in the metabolism of the substance.

Carcinogen. A substance which causes an increased incidence of benign or malignant neoplasms, or substantially decreases the time to develop neoplasms, in animals or humans. The classification of carcinogens is discussed in section II.A of appendix C to part 132.

Human cancer criterion (HCC). A Human Cancer Value (HCV) for a pollutant that meets the minimum data requirements for Tier I specified in appendix C.

Human cancer value (HCV). The maximum ambient water concentration of a substance at which a lifetime of exposure from either: drinking the water, consuming fish from the water, and water-related recreation activities; or consuming fish from the water, and water-related recreation activities, will represent a plausible upper-bound risk of contracting cancer of one in 100,000 using the exposure assumptions specified in the Methodologies for the Development of Human Health Criteria and Values in appendix C of this part.

Human noncancer criterion (HNC). A Human Noncancer Value (HNV) for a pollutant that meets the minimum data requirements for Tier I specified in appendix C of this part.

Human noncancer value (HNV). The maximum ambient water concentration of a substance at which adverse noncancer effects are not likely to occur in the human population from lifetime exposure via either: drinking the water, consuming fish from the water, and water-related recreation activities; or consuming fish from the water, and water-related recreation activities using the Methodologies for the Development of Human Health criteria and Values in appendix C of this part.

Linearized multi-stage model. A conservative mathematical model for cancer risk assessment. This model fits linear dose-response curves to low doses. It is consistent with a no-threshold model of carcinogenesis, i.e., exposure to even a very small amount of the substance is assumed to produce a finite increased risk of cancer.

Lowest observed adverse effect level (LOAEL). The lowest tested dose or concentration of a substance which resulted in an observed adverse effect in exposed test organisms when all higher doses or concentrations resulted in the same or more severe effects.

No observed adverse effect level (NOAEL). The highest tested dose or concentration of a substance which resulted in no observed adverse effect in exposed test organisms where higher doses or concentrations resulted in an adverse effect.

Quantitative structure activity relationship (OSAR) or structure activity relationship (SAR). A mathematical relationship between a property (activity) of a chemical and a number of descriptors of the chemical. These descriptors are chemical or physical characteristics obtained experimentally or predicted from the structure of the chemical.

Relative source contribution (RSC). The factor (percentage) used in calculating an HNV or HNC to account for all sources of exposure to a contaminant. The RSC reflects the percent of total exposure which can be attributed to surface water through water intake and fish consumption.

Risk associated dose (RAD). A dose of a known or presumed carcinogenic substance in (mg/kg/day) which, over a lifetime of exposure, is estimated to be associated with a plausible upper bound incremental cancer risk equal to one in 100,000.

Slope factor. Also known as q_1*, slope factor is the incremental rate of cancer development calculated through use of a linearized multistage model or other appropriate model. It is expressed in (mg/kg/day) of exposure to the chemical in question.

Threshold effect. An effect of a substance for which there is a theoretical or empirically established dose or concentration below which the effect does not occur.

Uncertainty factor (UF). One of several numeric factors used in operationally deriving criteria from experimental data to account for the quality or quantity of the available data.

C. *Level of Protection.* The criteria developed shall provide a level of protection likely to be without appreciable risk of carcinogenic and/or noncarcinogenic effects. Criteria are a function of the level of designated risk or no adverse effect estimation, selection of data and exposure assumptions. Ambient criteria for single carcinogens shall not be set at a level representing a lifetime upper-bound incremental risk greater than one in 100,000 of developing cancer using the hazard assessment techniques and exposure assumptions described herein. Criteria affording protection from noncarcinogenic effects shall be established at levels that, taking into account uncertainties, are considered likely to be without an appreciable risk of adverse human health effects (i.e., acute, subchronic and chronic toxicity including reproductive and developmental effects) during a lifetime of exposure, using the risk assessment techniques and exposure assumptions described herein.

D. *Two-tiered Classification.* Chemical concentration levels in surface water protective of human health shall be derived based on either a Tier I or Tier II classification. The two Tiers are primarily distinguished by the amount of toxicity data available for deriving the concentration levels and the quantity and quality of data on bioaccumulation.

II. Minimum Data Requirements

The best available toxicity data on the adverse health effects of a chemical and the best data on bioaccumulation factors shall be used when developing human health Tier I criteria or Tier II values. The best available toxicity data shall include data from well-

conducted epidemiologic and/or animal studies which provide, in the case of carcinogens, an adequate weight of evidence of potential human carcinogenicity and, in the case of noncarcinogens, a dose-response relationship involving critical effects biologically relevant to humans. Such information should be obtained from the EPA Integrated Risk Information System (IRIS) database, the scientific literature, and other informational databases, studies and/or reports containing adverse health effects data of adequate quality for use in this procedure. Strong consideration shall be given to the most currently available guidance provided by IRIS in deriving criteria or values, supplemented with any recent data not incorporated into IRIS. When deviations from IRIS are anticipated or considered necessary, it is strongly recommended that such actions be communicated to the EPA Reference Dose (RfD) and/or the Cancer Risk Assessment Verification Endeavor (CRAVE) workgroup immediately. The best available bioaccumulation data shall include data from field studies and well-conducted laboratory studies.

A. *Carcinogens.* Tier I criteria and Tier II values shall be derived using the methodologies described in section III.A of this appendix when there is adequate evidence of potential human carcinogenic effects for a chemical. It is strongly recommended that the EPA classification system for chemical carcinogens, which is described in the 1986 EPA Guidelines for Carcinogenic Risk Assessment (U.S. EPA, 1986), or future modifications thereto, be used in determining whether adequate evidence of potential carcinogenic effects exists. Carcinogens are classified, depending on the weight of evidence, as either human carcinogens, probable human carcinogens, or possible human carcinogens. The human evidence is considered inadequate and therefore the chemical cannot be classified as a human carcinogen, if one of two conditions exists: (a) there are few pertinent data, or (b) the available studies, while showing evidence of association, do not exclude chance, bias, or confounding and therefore a casual interpretation is not credible. The animal evidence is considered inadequate, and therefore the chemical cannot be classified as a probable or possible human carcinogen, when, because of major qualitative or quantitative limitations, the evidence cannot be interpreted as showing either the presence or absence of a carcinogenic effect.

Chemicals are described as ''human carcinogens'' when there is sufficient evidence from epidemiological studies to support a causal association between exposure to the chemicals and cancer. Chemicals described as ''probable human carcinogens'' include chemicals for which the weight of evidence of human carcinogenicity based on epidemiological studies is limited. Limited human evidence is that which indicates that a causal interpretation is credible, but that alternative explanations, such as chance, bias, or confounding, cannot adequately be excluded. Probable human carcinogens are also agents for which there is sufficient evidence from animal studies and for which there is inadequate evidence or no data from epidemiologic studies. Sufficient animal evidence is data which indicates that there is an increased incidence of malignant tumors or combined malignant and benign tumors: (a) in multiple species or strains; (b) in multiple experiments (e.g., with different routes of administration or using different dose levels); or (c) to an unusual degree in a single experiment with regard to high incidence, unusual site or type of tumor, or early age at onset. Additional evidence may be provided by data on dose-response effects, as well as information from short-term tests (such as mutagenicity/genotoxicity tests which help determine whether the chemical interacts directly with DNA) or on chemical structure, metabolism or mode of action.

''Possible human carcinogens'' are chemicals with limited evidence of carcinogenicity in animals in the absence of human data. Limited animal evidence is defined as data which suggests a carcinogenic effect but are limited because: (a) The studies involve a single species, strain, or experiment and do not meet criteria for sufficient evidence (see preceding paragraph); or (b) the experiments are restricted by inadequate dosage levels, inadequate duration of exposure to the agent, inadequate period of follow-up, poor survival, too few animals, or inadequate reporting; or (c) the studies indicate an increase in the incidence of benign tumors only. More specifically, this group can include a wide variety of evidence, e.g., (a) a malignant tumor response in a single well-conducted experiment that does not meet conditions for sufficient evidence, (b) tumor response of marginal statistical significance in studies having inadequate design or reporting, (c) benign but not malignant tumors with an agent showing no response in a variety of short-term tests for mutagenicity, and (d) response of marginal statistical significance in a tissue known to have a high or variable background rate.

1. *Tier I:* Weight of evidence of potential human carcinogenic effects sufficient to derive a Tier I HCC shall generally include human carcinogens, probable human carcinogens and can include, on a case-by-case basis, possible human carcinogens if studies have been well-conducted albeit based on limited evidence, when compared to studies used in classifying human and probable human carcinogens. The decision to use data on a possible human carcinogen for deriving Tier I criteria shall be a case-by-case determination. In determining whether to derive a Tier I HCC, additional evidence that shall be considered includes but is not limited to available information on mode of action, such as mutagenicity/genotoxicity (determinations of whether the chemical interacts directly with DNA), structure activity, and metabolism.

2. *Tier II:* Weight of evidence of possible human carcinogenic effects sufficient to derive a Tier II human cancer value shall include those possible human carcinogens for which there are at a minimum, data sufficient for quantitative risk assessment, but for which data are inadequate for Tier I criterion development due to a tumor response of marginal statistical significance or inability to derive a strong dose-response relationship. In determining whether to derive Tier II human cancer values, additional evidence that shall be considered includes but is not limited to available information on mode of action such as mutagenicity/genotoxicity (determinations of whether the chemical interacts directly with DNA), structure activity and metabolism. As with the use of data on possible human carcinogens in developing Tier I criteria, the decision to use data on possible human carcinogens to derive Tier II values shall be made on a case-by-case basis.

B. *Noncarcinogens.* All available toxicity data shall be evaluated considering the full range of possible health effects of a chemical, i.e., acute/subacute, chronic/subchronic and reproductive/developmental effects, in order to best describe the dose-response relationship of the chemical, and to calculate human noncancer criteria and values which will protect against the most sensitive endpoint(s) of toxicity. Although it is desirable to have an extensive database which considers a wide range of possible adverse effects, this type of data exists for a very limited number of chemicals. For many others, there is a range in quality and quantity of data available. To assure minimum reliability of criteria and values, it is necessary to establish a minimum database with which to develop Tier I criteria or Tier II values. The following represent the minimum data sets necessary for this procedure.

1. *Tier I:* The minimum data set sufficient to derive a Tier I human HNC shall include at least one well-conducted epidemiologic study or animal study. A well-conducted epidemiologic study for a Tier I HNC must quantify exposure level(s) and demonstrate positive association between exposure to a chemical and adverse effect(s) in humans. A well-conducted study in animals must demonstrate a dose response relationship involving one or more critical effect(s) biologically relevant to humans. (For example, study results from an animal whose pharmacokinetics and toxicokinetics match those of a human would be considered most biologically relevant.) Ideally, the duration of a study should span multiple generations of exposed test species or at least a major portion of the lifespan of one generation. This type of data is currently very limited. By the use of uncertainty adjustments, shorter term studies (such as 90-day subchronic studies) with evaluation of more limited effect(s) may be used to extrapolate to longer exposures or to account for a variety of adverse effects. For Tier I criteria developed pursuant to this procedure, such a limited study must be conducted for at least 90 days in rodents or 10 percent of the lifespan of other appropriate test species and demonstrate a no observable adverse effect level (NOAEL). Chronic studies of one year or longer in rodents or 50 percent of the lifespan or greater in other appropriate test species that demonstrate a lowest observable adverse effect level (LOAEL) may be sufficient for use in Tier I criterion derivation if the effects observed at the LOAEL were relatively mild and reversible as compared to

effects at higher doses. This does not preclude the use of a LOAEL from a study (of chronic duration) with only one or two doses if the effects observed appear minimal when compared to effect levels observed at higher doses in other studies.

2. *Tier II:* When the minimum data for deriving Tier I criteria are not available to meet the Tier I data requirements, a more limited database may be considered for deriving Tier II values. As with Tier I criteria, all available data shall be considered and ideally should address a range of adverse health effects with exposure over a substantial portion of the lifespan (or multiple generations) of the test species. When such data are lacking it may be necessary to rely on less extensive data in order to establish a Tier II value. With the use of appropriate uncertainty factors to account for a less extensive database, the minimum data sufficient to derive a Tier II value shall include a NOAEL from at least one well-conducted short-term repeated dose study. This study shall be of at least 28 days duration, in animals demonstrating a dose-response, and involving effects biologically relevant to humans. Data from studies of longer duration (greater than 28 days) and LOAELs from such studies (greater than 28 days) may be more appropriate in some cases for derivation of Tier II values. Use of a LOAEL should be based on consideration of the following information: severity of effect, quality of the study and duration of the study.

C. *Bioaccumulation factors (BAFs).*

1. *Tier I for Carcinogens and Noncarcinogens:* To be considered a Tier I cancer or noncancer human health criterion, along with satisfying the minimum toxicity data requirements of sections II.A.1 and II.B.1 of this appendix, a chemical must have the following minimum bioaccumulation data. For all organic chemicals either: (a) a field-measured BAF; (b) a BAF derived using the BSAF methodology; or (c) a chemical with a BAF less than 125 regardless of how the BAF was derived. For all inorganic chemicals, including organometals such as mercury, either: (a) a field-measured BAF or (b) a laboratory-measured BCF.

2. *Tier II for Carcinogens and Noncarcinogens:* A chemical is considered a Tier II cancer or noncancer human health value if it does not meet either the minimum toxicity data requirements of sections II.A.1 and II.B.1 of this appendix or the minimum bioaccumulation data requirements of section II.C.1 of this appendix.

III. Principles for Development of Tier I Criteria or Tier II Values

The fundamental components of the procedure to calculate Tier I criteria or Tier II values are the same. However, certain of the aspects of the procedure designed to account for short-duration studies or other limitations in data are more likely to be relevant in deriving Tier II values than Tier I criteria.

A. *Carcinogens.*

1. A non-threshold mechanism of carcinogenesis shall be assumed unless biological data adequately demonstrate the existence of a threshold on a chemical-specific basis.

2. All appropriate human epidemiologic data and animal cancer bioassay data shall be considered. Data specific to an environmentally appropriate route of exposure shall be used. Oral exposure should be used preferentially over dermal and inhalation since, in most cases, the exposure routes of greatest concern are fish consumption and drinking water/incidental ingestion. The risk associated dose shall be set at a level corresponding to an incremental cancer risk of one in 100,000. If acceptable human epidemiologic data are available for a chemical, it shall be used to derive the risk associated dose. If acceptable human epidemiologic data are not available, the risk associated dose shall be derived from available animal bioassay data. Data from a species that is considered most biologically relevant to humans (i.e., responds most like humans) is preferred where all other considerations regarding quality of data are equal. In the absence of data to distinguish the most relevant species, data from the most sensitive species tested, i.e., the species showing a carcinogenic effect at the lowest administered dose, shall generally be used.

3. When animal bioassay data are used and a non-threshold mechanism of carcinogenicity is assumed, the data are fitted to a linearized multistage computer model (e.g., Global '86 or equivalent model). Global '86 is the linearized multistage model, derived by Howe, Crump and Van Landingham (1986), which EPA uses to determine cancer potencies. The upper-bound 95 percent confidence limit on risk (or, the lower 95 percent confidence limit on dose) at the one in 100,000 risk level shall be used to calculate a risk associated dose (RAD). Other models, including modifications or variations of the linear multistage model which are more appropriate to the available data may be used where scientifically justified.

4. If the duration of the study is significantly less than the natural lifespan of the test animal, the slope may be adjusted on a case-by-case basis to compensate for latent tumors which were not expressed (e.g., U.S. EPA, 1980) In the absence of alternative approaches which compensate for study durations significantly less than lifetime, the permitting authority may use the process described in the 1980 National Guidelines (see 45 FR 79352).

5. A species scaling factor shall be used to account for differences between test species and humans. It shall be assumed that milligrams per surface area per day is an equivalent dose between species (U.S. EPA, 1986). All doses presented in mg/kg bodyweight will be converted to an equivalent surface area dose by raising the mg/kg dose to the 2/3 power. However, if adequate pharmacokinetic and metabolism studies are available, these data may be factored into the adjustment for species differences on a case-by-case basis.

6. Additional data selection and adjustment decisions must also be made in the process of quantifying risk. Consideration must be given to tumor selection for modeling, e.g., pooling estimates for multiple tumor types and identifying and combining benign and malignant tumors. All doses shall be adjusted to give an average daily dose over the study duration. Adjustments in the rate of tumor response must be made for early mortality in test species. The goodness-of-fit of the model to the data must also be assessed.

7. When a linear, non-threshold dose response relationship is assumed, the RAD shall be calculated using the following equation:

$$\mathrm{RAD} = \frac{0.00001}{q_1^*}$$

Where:

RAD=risk associated dose in milligrams of toxicant per kilogram body weight per day (mg/kg/day).

0.00001 (1×10^{-5})=incremental risk of developing cancer equal to one in 100,000.

q_1^*=slope factor $(\mathrm{mg/kg/day})^{-1}$.

8. If human epidemiologic data and/or other biological data (animal) indicate that a chemical causes cancer via a threshold mechanism, the risk associated dose may, on a case-by-case basis, be calculated using a method which assumes a threshold mechanism is operative.

B. *Noncarcinogens.*

1. Noncarcinogens shall generally be assumed to have a threshold dose or concentration below which no adverse effects should be observed. Therefore, the Tier I criterion or Tier II value is the maximum water concentration of a substance at or below which a lifetime exposure from drinking the water, consuming fish caught in the water, and ingesting water as a result of participating in water-related recreation activities is likely to be without appreciable risk of deleterious effects.

For some noncarcinogens, there may not be a threshold dose below which no adverse effects should be observed. Chemicals acting as genotoxic teratogens and germline mutagens are thought to possibly produce reproductive and/or developmental effects via a genetically linked mechanism which may have no threshold. Other chemicals also may not demonstrate a threshold. Criteria for these types of chemicals will be established on a case-by-case basis using appropriate assumptions reflecting the likelihood that no threshold exists.

2. All appropriate human and animal toxicologic data shall be reviewed and evaluated. To the maximum extent possible, data most specific to the environmentally relevant route of exposure shall be used. Oral exposure data should be used preferentially over dermal and inhalation since, in most cases, the exposure routes of greatest concern are fish consumption and drinking water/incidental ingestion. When acceptable human data are not available (e.g., well-conducted epidemiologic studies), animal data from species most biologically relevant to humans shall be used. In the absence of data to distinguish the most relevant species, data from the most sensitive animal species tested, i.e., the species showing a toxic effect at the lowest administered dose (given a relevant route of exposure), should generally be used.

3. Minimum data requirements are specified in section II.B of this appendix. The experimental exposure level representing the highest level tested at which no adverse effects were demonstrated (NOAEL) from studies satisfying the provisions of section II.B of this appendix shall be used for criteria calculations. In the absence of a NOAEL, the LOAEL from studies satisfying the provisions of section II.B of this appendix may be used if it is based on relatively mild and reversible effects.

4. Uncertainty factors shall be used to account for the uncertainties in predicting acceptable dose levels for the general human population based upon experimental animal data or limited human data.

a. An uncertainty factor of 10 shall generally be used when extrapolating from valid experimental results from studies on prolonged exposure to average healthy humans. This 10-fold factor is used to protect sensitive members of the human population.

b. An uncertainty factor of 100 shall generally be used when extrapolating from valid results of long-term studies on experimental animals when results of studies of human exposure are not available or are inadequate. In comparison to a, above, this represents an additional 10-fold uncertainty factor in extrapolating data from the average animal to the average human.

c. An uncertainty factor of up to 1000 shall generally be used when extrapolating from animal studies for which the exposure duration is less than chronic, but greater than subchronic (e.g., 90 days or more in length), or when other significant deficiencies in study quality are present, and when useful long-term human data are not available. In comparison to b, above, this represents an additional UF of up to 10-fold for less than chronic, but greater than subchronic, studies.

d. An UF of up to 3000 shall generally be used when extrapolating from animal studies for which the exposure duration is less than subchronic (e.g., 28 days). In comparison to b above, this represents an additional UF of up to 30-fold for less than subchronic studies (e.g., 28-day). The level of additional uncertainty applied for less than chronic exposures depends on the duration of the study used relative to the lifetime of the experimental animal.

e. An additional UF of between one and ten may be used when deriving a criterion from a LOAEL. This UF accounts for the lack of an identifiable NOAEL. The level of additional uncertainty applied may depend upon the severity and the incidence of the observed adverse effect.

f. An additional UF of between one and ten may be applied when there are limited effects data or incomplete sub-acute or chronic toxicity data (e.g., reproductive/developmental data). The level of quality and quantity of the experimental data available as well as structure-activity relationships may be used to determine the factor selected.

g. When deriving an UF in developing a Tier I criterion or Tier II value, the total uncertainty, as calculated following the guidance of sections 4.a through f, cited above, shall not exceed 10,000 for Tier I criteria and 30,000 for Tier II values.

5. All study results shall be converted, as necessary, to the standard unit for acceptable daily exposure of milligrams of toxicant per kilogram of body weight per day (mg/kg/day). Doses shall be adjusted for continuous exposure (i.e., seven days/week, 24 hours/day, etc.).

C. *Criteria and Value Derivation.*

1. *Standard Exposure Assumptions.* The following represent the standard exposure assumptions used to calculate Tier I criteria and Tier II values for carcinogens and noncarcinogens. Higher levels of exposure may be assumed by States and Tribes pursuant to Clean Water Act (CWA) section 510, or where appropriate in deriving site-specific criteria pursuant to procedure 1 in appendix F to part 132.

BW = body weight of an average human (BW = 70kg).

WC_d = per capita water consumption (both drinking and incidental exposure) for surface waters classified as public water supplies = two liters/day.

—or—

WC_r = per capita incidental daily water ingestion for surface waters not used as human drinking water sources = 0.01 liters/day.

FC = per capita daily consumption of regionally caught freshwater fish = 0.015kg/day (0.0036 kg/day for trophic level 3 and 0.0114 kg/day for trophic level 4).

BAF = bioaccumulation factor for trophic level 3 and trophic level 4, as derived using the BAF methodology in appendix B to part 132.

2. *Carcinogens.* The Tier I human cancer criteria or Tier II values shall be calculated as follows:

$$HCV = \frac{RAD \times BW}{WC + \left[\left(FC_{TL3} \times BAF^{HH}_{TL3}\right) + \left(FC_{TL4} \times BAF^{HH}_{TL4}\right)\right]}$$

Where:

HCV=Human Cancer Value in milligrams per liter (mg/L).

RAD=Risk associated dose in milligrams toxicant per kilogram body weight per day (mg/kg/day) that is associated with a lifetime incremental cancer risk equal to one in 100,000.

BW=weight of an average human (BW=70 kg).

WC_d=per capita water consumption (both drinking and incidental exposure) for surface waters classified as public water supplies=two liters/day.

or

WC_r=per capita incidental daily water ingestion for surface waters not used as human drinking water sources=0.01 liters/day.

FC_{TL3}=mean consumption of trophic level 3 of regionally caught freshwater fish=0.0036 kg/day.

FC_{TL4}=mean consumption of trophic level 4 of regionally caught freshwater fish=0.0114 kg/day.

BAF^{HH}_{TL3}=bioaccumulation factor for trophic level 3 fish, as derived using the BAF methodology in appendix B to part 132.

BAF^{HH}_{TL4}=bioaccumulation factor for trophic level 4 fish, as derived using the BAF methodology in appendix B to part 132.

3. *Noncarcinogens.* The Tier I human noncancer criteria or Tier II values shall be calculated as follows:

$$HNV = \frac{ADE \times BW \times RSC}{WC + \left[\left(FC_{TL3} \times BAF^{HH}_{TL3}\right) + \left(FC_{TL4} \times BAF^{HH}_{TL4}\right)\right]}$$

Where:

HNV=Human noncancer value in milligrams per liter (mg/L).

ADE=Acceptable daily exposure in milligrams toxicant per kilogram body weight per day (mg/kg/day).

RSC=Relative source contribution factor of 0.8. An RSC derived from actual exposure data may be developed using the methodology outlined by the 1980 National Guidelines (see 45 FR 79354).

BW=weight of an average human (BW=70 kg).

WC_d=per capita water consumption (both drinking and incidental exposure) for surface waters classified as public water supplies=two liters/day.

or

WC_r=per capita incidental daily water ingestion for surface waters not used as human drinking water sources=0.01 liters/day.

FC_{TL3}=mean consumption of trophic level 3 fish by regional sport fishers of regionally caught freshwater fish=0.0036 kg/day.

FC_{TL4}=mean consumption of trophic level 4 fish by regional sport fishers of regionally caught freshwater fish=0.0114 kg/day.

BAF^{HH}_{TL3}=human health bioaccumulation factor for edible portion of trophic level 3 fish, as derived using the BAF methodology in appendix B to part 132.

BAF^{HH}_{TL4}=human health bioaccumulation factor for edible portion of trophic level 4 fish, as derived using the BAF methodology in appendix B to part 132.

IV. References

A. Howe, R.B., K.S. Crump and C. Van Landingham. 1986. Computer Program to Extrapolate Quantitative Animal Toxicity Data to Low Doses. Prepared for EPA under subcontract #2–251U–2745 to Research Triangle Institute.

B. U.S. Environmental Protection Agency. 1980. Water Quality Criteria Availability, Appendix C Guidelines and Methodology Used in the Preparation of Health Effects Assessment Chapters of the Consent Decree Water Quality Criteria Documents. Available from U.S. Environmental Protection Agency, Office of Water Resource Center (WH–550A), 401 M St., SW., Washington, DC 20460.

C. U.S. Environmental Protection Agency. 1986. Guidelines for Carcinogen Risk Assessment. Available from U.S. Environmental Protection Agency, Office of Water Resource Center (WH–550A), 401 M St., SW., Washington, DC 20460.

Appendix D to Part 132—Great Lakes Water Quality Initiative Methodology for the Development of Wildlife Criteria

Great Lakes States and Tribes shall adopt provisions consistent with (as protective as) this appendix.

I. Introduction

A. A Great Lakes Water Quality Wildlife Criterion (GLWC) is the concentration of a substance which is likely to, if not exceeded, protect avian and mammalian wildlife populations inhabiting the Great Lakes basin from adverse effects resulting from the ingestion of water and aquatic prey taken from surface waters of the Great Lakes System. These criteria are based on existing toxicological studies of the substance of concern and quantitative information about the exposure of wildlife species to the substance (i.e., food and water consumption rates). Since toxicological and exposure data for individual wildlife species are limited, a GLWC is derived using a methodology similar to that used to derive noncancer human health criteria (Barnes and Dourson, 1988; NAS, 1977; NAS, 1980; U.S. EPA, 1980). Separate avian and mammalian values are developed using taxonomic class-specific toxicity data and exposure data for five representative Great Lakes basin wildlife species. The wildlife species selected are representative of avian and mammalian species resident in the Great Lakes basin which are likely to experience the highest exposures to bioaccumulative contaminants through the aquatic food web; they are the bald eagle, herring gull, belted kingfisher, mink, and river otter.

B. This appendix establishes a methodology which is required when developing Tier I wildlife criteria for bioaccumulative chemicals of concern (BCCs). The use of the equation provided in the methodology is encouraged, but not required, for the development of Tier I criteria or Tier II values for pollutants other than those identified in Table 6–A for which Tier I criteria or Tier II values are determined to be necessary for the protection of wildlife in the Great Lakes basin. A discussion of the methodology for deriving Tier II values can be found in the Great Lakes Water Quality Initiative Technical Support Document for Wildlife Criteria (Wildlife TSD).

C. In the event that this methodology is used to develop criteria for pollutants other than BCCs, or in the event that the Tier II methodology described in the Wildlife TSD is used to derive Tier II values, the methodology for deriving bioaccumulation factors under appendix B to part 132 must be used in either derivation. For chemicals which do not biomagnify to the extent of BCCs, it may be appropriate to select different representative species which are better examples of species with the highest exposures for the given chemical. The equation presented in this methodology, however, is still encouraged. In addition, procedure 1 of appendix F of this part describes the procedures for calculating site-specific wildlife criteria.

D. The term ''wildlife value'' (WV) is used to denote the value for each representative species which results from using the equation presented below, the value obtained from averaging species values within a class, or any value derived from application of the site-specific procedure provided in procedure 1 of appendix F of this part. The WVs calculated for the representative species are used to calculate taxonomic class-specific WVs. The WV is the concentration of a substance which, if not exceeded, should better protect the taxon in question.

E. ''Tier I wildlife criterion,'' or ''Tier I criterion'' is used to denote the number derived from data meeting the Tier I minimum database requirements, and which will be protective of the two classes of wildlife. It is synonymous with the term ''GLWC,'' and the two are used interchangeably.

II. Calculation of Wildlife Values for Tier I Criteria

Table 4 of Part 132 and Table D–1 of this appendix contain criteria calculated by EPA using the methodology provided below.

A. *Equation for Avian and Mammalian Wildlife Values.* Tier I wildlife values for the pollutants designated BCCs pursuant to part 132 are to be calculated using the equation presented below.

$$WV = \frac{\dfrac{TD}{UF_A \times UF_S \times UF_L} \times Wt}{W + \sum\left(F_{TLi} \times BAF^{WL}_{TLi}\right)}$$

Where:

WV=Wildlife Value in milligrams of substance per liter (mg/L).

TD=Test Dose (TD) in milligrams of substance per kilograms per day (mg/kg-d) for the test species. This shall be either a NOAEL or a LOAEL.

UF_A=Uncertainty Factor (UF) for extrapolating toxicity data across species (unitless). A species-specific UF shall be selected and applied to each representative species, consistent with the equation.

UF_S=UF for extrapolating from subchronic to chronic exposures (unitless).

UF_L=UF for LOAEL to NOAEL extrapolations (unitless).

Wt=Average weight in kilograms (kg) for the representative species.

W=Average daily volume of water consumed in liters per day (L/d) by the representative species.

F_{TLi}=Average daily amount of food consumed from trophic level i in kilograms per day (kg/d) by the representative species.

BAF^{WL}_{TLi}=Bioaccumulation factor (BAF) for wildlife food in trophic level i in liters per kilogram (L/kg), developed using the BAF methodology in appendix B to part 132, Methodology for Development of Bioaccumulation Factors. For consumption of piscivorous birds by other birds (e.g., herring gull by eagles), the BAF is derived by multiplying the trophic level 3 BAF for fish by a biomagnification factor to account for the biomagnification from fish to the consumed birds.

B. *Identification of Representative Species for Protection.* For bioaccumulative chemicals, piscivorous species are identified as the focus of concern for wildlife criteria development in the Great Lakes. An analysis of known or estimated exposure components for avian and mammalian wildlife species is presented in the Wildlife TSD. This analysis identifies three avian species (eagle, kingfisher and herring gull) and two mammalian species (mink and otter) as representative species for protection. The TD obtained from toxicity data for each taxonomic class is used to calculate WVs for each of the five representative species.

C. *Calculation of Avian and Mammalian Wildlife Values and GLWC Derivation.* The avian WV is the geometric mean of the WVs calculated for the three representative avian species. The mammalian WV is the geometric mean of the WVs calculated for the two representative mammalian species. The lower of the mammalian and avian WVs must be selected as the GLWC.

III. Parameters of the Effect Component of the Wildlife Criteria Methodology

A. *Definitions.* The following definitions provide additional specificity and guidance in the evaluation of toxicity data and the application of this methodology.

Acceptable endpoints. For the purpose of wildlife criteria derivation, acceptable subchronic and chronic endpoints are those which affect reproductive or developmental success, organismal viability or growth, or any other endpoint which is, or is directly related to, parameters that influence population dynamics.

Chronic effect. An adverse effect that is measured by assessing an acceptable endpoint, and results from continual exposure over several generations, or at least over a significant part of the test species' projected life span or life stage.

Lowest-observed-adverse-effect-level (LOAEL). The lowest tested dose or concentration of a substance which resulted in an observed adverse effect in exposed test organisms when all higher doses or concentrations resulted in the same or more severe effects.

No-observed-adverse-effect-level (NOAEL). The highest tested dose or concentration of a substance which resulted in no observed adverse effect in exposed test organisms where higher doses or concentrations resulted in an adverse effect.

Subchronic effect. An adverse effect, measured by assessing an acceptable endpoint, resulting from continual exposure for a period of time less than that deemed necessary for a chronic test.

B. *Minimum Toxicity Database for Tier I Criteria Development.* A TD value is required for criterion calculation. To derive a Tier I criterion for wildlife, the data set shall provide enough data to generate a subchronic or chronic dose-response curve for any given substance for both mammalian and avian species. In reviewing the toxicity data available which meet the minimum data requirements for each taxonomic class, the following order of preference shall be applied to select the appropriate TD to be used for calculation of individual WVs. Data from peer-reviewed field studies of wildlife species take precedence over other types of studies, where such studies are of adequate quality. An acceptable field study must be of subchronic or chronic duration, provide a defensible, chemical-specific dose-response curve in which cause and effect are clearly established, and assess acceptable endpoints as defined in this document. When acceptable wildlife field studies are not available, or determined to be of inadequate quality, the needed toxicity information may come from peer-reviewed laboratory studies. When laboratory studies are used, preference shall be given to laboratory studies with wildlife species over traditional laboratory animals to reduce uncertainties in making interspecies extrapolations. All available laboratory data and field studies shall be reviewed to corroborate the final GLWC, to assess the reasonableness of the toxicity value used, and to assess the appropriateness of any UFs which are applied. When evaluating the studies from which a test dose is derived in general, the following requirements must be met:

1. The mammalian data must come from at least one well-conducted study of 90 days or greater designed to observe subchronic or chronic effects as defined in this document.

2. The avian data must come from at least one well-conducted study of 70 days or greater designed to observe subchronic or chronic effects as defined in this document.

3. In reviewing the studies from which a TD is derived for use in calculating a WV, studies involving exposure routes other than oral may be considered only when an equivalent oral daily dose can be estimated and technically justified because the criteria calculations are based on an oral route of exposure.

4. In assessing the studies which meet the minimum data requirements, preference should be given to studies which assess effects on developmental or reproductive endpoints because, in general, these are more important endpoints in ensuring that a population's productivity is maintained. The Wildlife TSD provides additional discussion on the selection of an appropriate toxicity study.

C. *Selection of TD Data.* In selecting data to be used in the derivation of WVs, the evaluation of acceptable endpoints, as defined in Section III.A of this appendix, will be the primary selection criterion. All data not part of the selected subset may be used to assess the reasonableness of the toxicity value and the appropriateness of the Ufs which are applied.

1. If more than one TD value is available within a taxonomic class, based on different endpoints of toxicity, that TD, which is likely to reflect best potential impacts to wildlife populations through resultant changes in mortality or fecundity rates, shall be used for the calculation of WVs.

2. If more than one TD is available within a taxonomic class, based on the same endpoint of toxicity, the TD from the most sensitive species shall be used.

3. If more than one TD based on the same endpoint of toxicity is available for a given species, the TD for that species shall be calculated using the geometric mean of those TDs.

D. *Exposure Assumptions in the Determination of the TD.* 1. In those cases in which a TD is available in units other than milligrams of substance per kilograms per day (mg/kg/d), the following procedures shall be used to convert the TD to the appropriate units prior to calculating a WV.

2. If the TD is given in milligrams of toxicant per liter of water consumed by the test animals (mg/L), the TD shall be multiplied by the daily average volume of water consumed by the test animals in liters per day (L/d) and divided by the average weight of the test animals in kilograms (kg).

3. If the TD is given in milligrams of toxicant per kilogram of food consumed by the test animals (mg/kg), the TD shall be multiplied by the average amount of food in kilograms consumed daily by the test animals (kg/d) and divided by the average weight of the test animals in kilograms (kg).

E. *Drinking and Feeding Rates.* 1. When drinking and feeding rates and body weight are needed to express the TD in milligrams of substance per kilograms per day (mg/kg/d), they are obtained from the study from which the TD was derived. If not already determined, body weight, and drinking and feeding rates are to be converted to a wet weight basis.

2. If the study does not provide the needed values, the values shall be determined from appropriate scientific literature. For studies done with domestic laboratory animals, either the Registry of Toxic Effects of Chemical Substances (National Institute for Occupational Safety and Health, the latest edition, Cincinnati, OH), or Recommendations for and Documentation of Biological Values for Use in Risk Assessment (U.S. EPA, 1988) should be consulted. When these references do not contain exposure information for the species used in a given study, either the allometric equations from Calder and Braun (1983) and Nagy (1987), which are presented below, or the exposure estimation methods presented in Chapter 4 of the Wildlife Exposure Factors Handbook (U.S. EPA, 1993), should be applied to approximate the needed feeding or drinking rates. Additional discussion and recommendations are provided in the Wildlife TSD. The choice of the methods described above is at the discretion of the State or Tribe.

3. For mammalian species, the general allometric equations are:

a. $F = 0.0687 \times (Wt)^{0.82}$

Where:

F = Feeding rate of mammalian species in kilograms per day (kg/d) dry weight.

Wt = Average weight in kilograms (kg) of the test animals.

b. $W = 0.099 \times (Wt)^{0.90}$

Where:

W = Drinking rate of mammalian species in liters per day (L/d).

Wt = Average weight in kilograms (kg) of the test animals.

4. For avian species, the general allometric equations are:

a. $F = 0.0582\ (Wt)^{0.65}$

Where:

F = Feeding rate of avian species in kilograms per day (kg/d) dry weight.

Wt = Average weight in kilograms (kg) of the test animals.

b. $W = 0.059 \times (Wt)^{0.67}$

Where:

W = Drinking rate of avian species in liters per day (L/d).

Wt = Average weight in kilograms (kg) of the test animals.

F. *LOAEL to NOAEL Extrapolations (UF_L).* In those cases in which a NOAEL is unavailable as the TD and a LOAEL is available, the LOAEL may be used to estimate the NOAEL. If used, the LOAEL shall be divided by an UF to estimate a NOAEL for use in deriving WVs. The value of the UF shall not be less than one and should not exceed 10, depending on the dose-response curve and any other available data, and is represented by UF_L in the equation expressed in Section II.A of this appendix. Guidance for selecting an appropriate UF_L, based on a review of available wildlife toxicity data, is available in the Wildlife TSD.

G. *Subchronic to Chronic Extrapolations (US_S).* In instances where only subchronic data are available, the TD may be derived from subchronic data. In such cases, the TD shall be divided by an UF to extrapolate from subchronic to chronic levels. The value of the UF shall not be less than one and should not exceed 10, and is represented by UF_S in the equation expressed in Section II.A of this appendix. This factor is to be used when assessing highly bioaccumulative substances where toxicokinetic considerations suggest that a bioassay of limited length

underestimates chronic effects. Guidance for selecting an appropriate UF_S, based on a review of available wildlife toxicity data, is available in the Wildlife TSD.

H. *Interspecies Extrapolations (UF_A).* 1. The selection of the UF_A shall be based on the available toxicological data and on available data concerning the physicochemical, toxicokinetic, and toxicodynamic properties of the substance in question and the amount and quality of available data. This value is an UF that is intended to account for differences in toxicological sensitivity among species. Guidance for selecting an appropriate UF_A, based on a review of available wildlife toxicity data, is available in the Wildlife TSD. Additional discussion of an interspecies UF located in appendix A to the Great Lakes Water Quality Initiative Technical Support Document for Human Health Criteria may be useful in determining the appropriate value for UF_A.

2. For the derivation of Tier I criteria, a UF_A shall not be less than one and should not exceed 100, and shall be applied to each of the five representative species, based on existing data and best professional judgment. The value of UF_A may differ for each of the representative species.

3. For Tier I wildlife criteria, the UF_A shall be used only for extrapolating toxicity data across species within a taxonomic class, except as provided below. The Tier I UF_A is not intended for interclass extrapolations because of the poorly defined comparative toxicokinetic and toxicodynamic parameters between mammals and birds. However, an interclass extrapolation employing a UF_A may be used for a given chemical if it can be supported by a validated biologically-based dose-response model or by an analysis of interclass toxicological data, considering acceptable endpoints, for a chemical analog that acts under the same mode of toxic action.

IV. Parameters of the Exposure Component of the Wildlife Criteria Methodology

A. *Drinking and Feeding Rates of Representative Species.* The body weights (Wt), feeding rates (F_{Tli}), drinking rates (W), and trophic level dietary composition (as food ingestion rate and percent in diet) for each of the five representative species are presented in Table D–2 of this appendix. Guidance on incorporating the non-aquatic portion of the bald eagle and mink diets in the criteria calculations is available in the Wildlife TSD.

B. *BAFs.* The Methodology for Development of Bioaccumulation Factors is presented in appendix B to part 132. Trophic level 3 and 4 BAFs are used to derive Wvs because these are the trophic levels at which the representative species feed.

V. References

A. Barnes, D.G. and M. Dourson. 1988. Reference Dose (RfD): Description and Use in Health Risk Assessments. Regul. Toxicol. Pharmacol. 8:471–486.

B. Calder III, W.A. and E.J. Braun. 1983. Scaling of Osmotic Regulation in Mammals and Birds. American Journal of Physiology. 244:601–606.

C. Nagy, K.A. 1987. Field Metabolic Rate and Food Requirement Scaling in Mammals and Birds. Ecological Monographs. 57(2):111–128.

D. National Academy of Sciences. 1977. Chemical Contaminants: Safety and Risk Assessment, *in* Drinking Water and Health, Volume 1. National Academy Press.

E. National Academy of Sciences. 1980. Problems of Risk Estimation, *in* Drinking Water and Health, Volume 3. National Academy Press.

F. National Institute for Occupational Safety and Health. Latest edition. Registry of Toxic Effects of Chemical Substances. Division of Standards Development and Technology Transfer. (Available only on microfiche or as an electronic database.)

G. U.S. EPA. 1980. Appendix C. Guidelines and Methodology Used in the Preparation of Health Effect Assessment Chapters of the Consent Decree Water Criteria Documents, pp. 79347–79357 *in* Water Quality Criteria Documents; Availability. Available from U.S. Environmental Protection Agency, Office of Water Resource Center (WH–550A), 401 M St. SW, Washington, DC 20460.

H. U.S. EPA. 1988. Recommendations for, and documentation of, biological values for use in risk assessment. NTIS–PB88–179874.

I. U.S. EPA. 1993. Wildlife Exposure Factors Handbook, Volumes I and II. EPA/600/R–93/187a and b.

Tables to Appendix D to Part 132

TABLE D–1.—TIER I GREAT LAKES WILDLIFE CRITERIA

Substance	Criterion (µg/L)
DDT & Metabolites	1.1E–5
Mercury	1.3E–3
PCBs (total)	7.4E–5
2,3,7,8-TCDD	3.1E–9

TABLE D–2.—EXPOSURE PARAMETERS FOR THE FIVE REPRESENTATIVE SPECIES IDENTIFIED FOR PROTECTION

Species (units)	Adult body weight (kg)	Water ingestion rate (L/day)	Food ingestion rate of prey in each trophic level (kg/day)	Trophic level of prey (percent of diet)
Mink	0.80	0.081	TL3: 0.159; Other: 0.0177	TL3: 90; Other: 10.
Otter	7.4	0.600	TL3: 0.977; TL4: 0.244	TL3: 80; TL4: 20.
Kingfisher	0.15	0.017	TL3: 0.0672	TL3: 100.
Herring gull	1.1	0.063	TL3: 0.192; TL4: 0.0480	Fish: 90—TL3: 80; TL4: 20.
			Other: 0.0267	Other: 10.
Bald eagle	4.6	0.160	TL3: 0.371; TL4: 0.0929	Fish: 92—TL3: 80; TL4: 20.
			PB: 00283; Other: 0.0121	Birds: 8—PB: 70; non-aquatic: 30.

NOTE: TL3=trophic level three fish; TL4=trophic level four fish; PB=piscivorous birds; Other=non-aquatic birds and mammals.

Appendix E to Part 132—Great Lakes Water Quality Initiative Antidegradation Policy

Great Lakes States and Tribes shall adopt provisions consistent with (as protective as) appendix E to part 132.

The State or Tribe shall adopt an antidegradation standard applicable to all waters of the Great Lakes System and identify the methods for implementing such a standard. Consistent with 40 CFR 131.12, an acceptable antidegradation standard and implementation procedure are required elements of a State's or Tribe's water quality standards program. Consistent with 40 CFR 131.6, a complete water quality standards submission needs to include both an antidegradation standard and antidegradation implementation procedures. At a minimum, States and Tribes shall adopt provisions in their antidegradation standard and implementation methods consistent with sections I, II, III and IV of this appendix, applicable to pollutants identified as bioaccumulative chemicals of concern (BCCs).

I. Antidegradation Standard

This antidegradation standard shall be applicable to any action or activity by any source, point or nonpoint, of pollutants that is anticipated to result in an increased loading of BCCs to surface waters of the Great Lakes System and for which independent regulatory authority exists requiring compliance with water quality standards. Pursuant to this standard:

A. Existing instream water uses, as defined pursuant to 40 CFR 131, and the level of water quality necessary to protect existing uses shall be maintained and protected. Where designated uses of the waterbody are impaired, there shall be no lowering of the water quality with respect to the pollutant or pollutants which are causing the impairment;

B. Where, for any parameter, the quality of the waters exceed levels necessary to support the propagation of fish, shellfish, and wildlife and recreation in and on the waters, that water shall be considered high quality for that parameter consistent with the definition of high quality water found at section II.A of this appendix and that quality

shall be maintained and protected unless the State or Tribe finds, after full satisfaction of intergovernmental coordination and public participation provisions of the State's or Tribe's continuing planning process, that allowing lower water quality is necessary to accommodate important economic or social development in the area in which the waters are located. In allowing such degradation, the State or Tribe shall assure water quality adequate to protect existing uses fully. Further, the State or Tribe shall assure that there shall be achieved the highest statutory and regulatory requirements for all new and existing point sources and all cost-effective and reasonable best management practices for nonpoint source control. The State or Tribe shall utilize the Antidegradation Implementation Procedures adopted pursuant to the requirements of this regulation in determining if any lowering of water quality will be allowed;

C. Where high quality waters constitute an outstanding national resource, such as waters of national and State parks and wildlife refuges and waters of exceptional recreational or ecological significance, that water quality shall be maintained and protected; and

D. In those cases where the potential lowering of water quality is associated with a thermal discharge, the decision to allow such degradation shall be consistent with section 316 of the Clean Water Act (CWA).

II. Antidegradation Implementation Procedures

A. *Definitions.*

Control Document. Any authorization issued by a State, Tribal or Federal agency to any source of pollutants to waters under its jurisdiction that specifies conditions under which the source is allowed to operate.

High quality waters. High quality waters are water bodies in which, on a parameter by parameter basis, the quality of the waters exceeds levels necessary to support propagation of fish, shellfish, and wildlife and recreation in and on the water.

Lake Superior Basin—Outstanding International Resource Waters. Those waters designated as such by a Tribe or State consistent with the September 1991 Bi-National Program to Restore and Protect the Lake Superior Basin. The purpose of such designations shall be to ensure that any new or increased discharges of Lake Superior bioaccumulative substances of immediate concern are subject to best technology in process and treatment requirements.

Lake Superior Basin—Outstanding National Resource Waters. Those waters designated as such by a Tribe or State consistent with the September 1991 Bi-National Program to Restore and Protect the Lake Superior Basin. The purpose of such designations shall be to prohibit new or increased discharges of Lake Superior bioaccumulative substances of immediate concern from point sources in these areas.

Lake Superior bioaccumulative substances of immediate concern. A list of substances identified in the September 1991 Bi-National Program to Restore and Protect the Lake Superior Basin. They include: 2, 3, 7, 8-TCDD; octachlorostyrene; hexachlorobenzene; chlordane; DDT, DDE, and other metabolites; toxaphene; PCBs; and mercury. Other chemicals may be added to the list following States' or Tribes' assessments of environmental effects and impacts and after public review and comment.

Outstanding National Resource Waters. Those waters designated as such by a Tribe or State. The State or Tribal designation shall describe the quality of such waters to serve as the benchmark of the water quality that shall be maintained and protected. Waters that may be considered for designation as Outstanding National Resource Waters include, but are not limited to, water bodies that are recognized as:

Important because of protection through official action, such as Federal or State law, Presidential or secretarial action, international treaty, or interstate compact;

Having exceptional recreational significance;

Having exceptional ecological significance;

Having other special environmental, recreational, or ecological attributes; or waters whose designation as Outstanding National Resource Waters is reasonably necessary for the protection of other waters so designated.

Significant Lowering of Water Quality. A significant lowering of water quality occurs when there is a new or increased loading of any BCC from any regulated existing or new facility, either point source or nonpoint source for which there is a control document or reviewable action, as a result of any activity including, but not limited to:

(1) Construction of a new regulated facility or modification of an existing regulated facility such that a new or modified control document is required;

(2) Modification of an existing regulated facility operating under a current control document such that the production capacity of the facility is increased;

(3) Addition of a new source of untreated or pretreated effluent containing or expected to contain any BCC to an existing wastewater treatment works, whether public or private;

(4) A request for an increased limit in an applicable control document;

(5) Other deliberate activities that, based on the information available, could be reasonably expected to result in an increased loading of any BCC to any waters of the Great Lakes System.

b. Notwithstanding the above, changes in loadings of any BCC within the existing capacity and processes, and that are covered by the existing applicable control document, are not subject to an antidegradation review. These changes include, but are not limited to:

(1) Normal operational variability;

(2) Changes in intake water pollutants;

(3) Increasing the production hours of the facility, (e.g., adding a second shift); or

(4) Increasing the rate of production.

C. Also, excluded from an antidegradation review are new effluent limits based on improved monitoring data or new water quality criteria or values that are not a result of changes in pollutant loading.

B. For all waters, the Director shall ensure that the level of water quality necessary to protect existing uses is maintained. In order to achieve this requirement, and consistent with 40 CFR 131.10, water quality standards use designations must include all existing uses. Controls shall be established as necessary on point and nonpoint sources of pollutants to ensure that the criteria applicable to the designated use are achieved in the water and that any designated use of a downstream water is protected. Where water quality does not support the designated uses of a waterbody or ambient pollutant concentrations exceed water quality criteria applicable to that waterbody, the Director shall not allow a lowering of water quality for the pollutant or pollutants preventing the attainment of such uses or exceeding such criteria.

C. For Outstanding National Resource Waters:

1. The Director shall ensure, through the application of appropriate controls on pollutant sources, that water quality is maintained and protected.

2. Exception. A short-term, temporary (i.e., weeks or months) lowering of water quality may be permitted by the Director.

D. For high quality waters, the Director shall ensure that no action resulting in a lowering of water quality occurs unless an antidegradation demonstration has been completed pursuant to section III of this appendix and the information thus provided is determined by the Director pursuant to section IV of this appendix to adequately support the lowering of water quality.

1. The Director shall establish conditions in the control document applicable to the regulated facility that prohibit the regulated facility from undertaking any deliberate action, such that there would be an increase in the rate of mass loading of any BCC, unless an antidegradation demonstration is provided to the Director and approved pursuant to section IV of this appendix prior to commencement of the action. Imposition of limits due to improved monitoring data or new water quality criteria or values, or changes in loadings of any BCC within the existing capacity and processes, and that are covered by the existing applicable control document, are not subject to an antidegradation review.

2. For BCCs known or believed to be present in a discharge, from a point or nonpoint source, a monitoring requirement shall be included in the control document. The control document shall also include a provision requiring the source to notify the Director or any increased loadings. Upon notification, the Director shall require actions as necessary to reduce or eliminate the increased loading.

3. Fact Sheets prepared pursuant to 40 CFR 124.8 and 124.56 shall reflect any conditions developed under sections II.D.1 or II.D.2 of this appendix and included in a permit.

E. *Special Provisions for Lake Superior.*The following conditions apply in addition to those specified in section II.B through II.C of this appendix for waters of Lake Superior so designated.

1. A State or Tribe may designate certain specified areas of the Lake Superior Basin as Lake Superior Basin—Outstanding National Resource Waters for the purpose of prohibiting the new or increased discharge of

Lake Superior bioaccumulative substances of immediate concern from point sources in these areas.

2. States and Tribes may designate all waters of the Lake Superior Basin as Outstanding International Resource Waters for the purpose of restricting the increased discharge of Lake Superior bioaccumulative substances of immediate concern from point sources consistent with the requirements of sections III.C and IV.B of this appendix.

F. *Exemptions.* Except as the Director may determine on a case-by-case basis that the application of these procedures is required to adequately protect water quality, or as the affected waterbody is an Outstanding National Resource Water as defined in section II.A of this appendix, the procedures in this part do not apply to:

1. Short-term, temporary (i.e., weeks or months) lowering of water quality;

2. Bypasses that are not prohibited at 40 CFR 122.41(m); and

3. Response actions pursuant to the Comprehensive Environmental Response, Compensation and Liability Act (CERCLA), as amended, or similar Federal, State or Tribal authorities, undertaken to alleviate a release into the environment of hazardous substances, pollutants or contaminants which may pose an imminent and substantial danger to public health or welfare.

III. Antidegradation Demonstration

Any entity seeking to lower water quality in a high quality water or create a new or increased discharge of Lake Superior bioaccumulative substances of immediate concern in a Lake Superior Outstanding International Resource Water must first, as required by sections II.D or II.E.2 of this appendix, submit an antidegradation demonstration for consideration by the Director. States and Tribes should tailor the level of detail and documentation in antidegradation reviews, to the specific circumstances encountered. The antidegradation demonstration shall include the following:

A. *Pollution Prevention Alternatives Analysis.* Identify any cost-effective pollution prevention alternatives and techniques that are available to the entity, that would eliminate or significantly reduce the extent to which the increased loading results in a lowering of water quality.

B. *Alternative or Enhanced Treatment Analysis.* Identify alternative or enhanced treatment techniques that are available to the entity that would eliminate the lowering of water quality and their costs relative to the cost of treatment necessary to achieve applicable effluent limitations.

C. *Lake Superior.* If the States or Tribes designate the waters of Lake Superior as Outstanding International Resource Waters pursuant to section II.E.2 of this appendix, then any entity proposing a new or increased discharge of any Lake Superior bioaccumulative substance of immediate concern to the Lake Superior Basin shall identify the best technology in process and treatment to eliminate or reduce the extent of the lowering of water quality. In this case, the requirements in section III.B of this appendix do not apply.

D. *Important Social or Economic Development Analysis.* Identify the social or economic development and the benefits to the area in which the waters are located that will be foregone if the lowering of water quality is not allowed.

E. *Special Provision for Remedial Actions.* Entities proposing remedial actions pursuant to the CERCLA, as amended, corrective actions pursuant to the Resource Conservation and Recovery Act, as amended, or similar actions pursuant to other Federal or State environmental statutes may submit information to the Director that demonstrates that the action utilizes the most cost effective pollution prevention and treatment techniques available, and minimizes the necessary lowering of water quality, in lieu of the information required by sections III.B through III.D of this appendix.

IV. Antidegradation Decision

A. Once the Director determines that the information provided by the entity proposing to increase loadings is administratively complete, the Director shall use that information to determine whether or not the lowering of water quality is necessary, and, if it is necessary, whether or not the lowering of water quality will support important social and economic development in the area. If the proposed lowering of water quality is either not necessary, or will not support important social and economic development, the Director shall deny the request to lower water quality. If the lowering of water quality is necessary, and will support important social and economic development, the Director may allow all or part of the proposed lowering to occur as necessary to accommodate the important social and economic development. In no event may the decision reached under this section allow water quality to be lowered below the minimum level required to fully support existing and designated uses. The decision of the Director shall be subject to the public participation requirements of 40 CFR 25.

B. If States designate the waters of Lake Superior as Outstanding International Resource Waters pursuant to section II.E.2 of this appendix, any entity requesting to lower water quality in the Lake Superior Basin as a result of the new or increased discharge of any Lake Superior bioaccumulative substance of immediate concern shall be required to install and utilize the best technology in process and treatment as identified by the Director.

Appendix F to Part 132—Great Lakes Water Quality Initiative Implementation Procedures

Procedure 1: Site-specific Modifications to Criteria and Values

Great Lakes States and Tribes shall adopt provisions consistent with (as protective as) this procedure.

A. Requirements for Site-specific Modifications to Criteria and Values. Criteria and values may be modified on a site-specific basis to reflect local environmental conditions as restricted by the following provisions. Any such modifications must be protective of designated uses and aquatic life, wildlife or human health and be submitted to EPA for approval. In addition, any site-specific modifications that result in less stringent criteria must be based on a sound scientific rationale and shall not be likely to jeopardize the continued existence of endangered or threatened species listed or proposed under section 4 of the Endangered Species Act (ESA) or result in the destruction or adverse modification of such species' critical habitat. More stringent modifications shall be developed to protect endangered or threatened species listed or proposed under section 4 of the ESA, where such modifications are necessary to ensure that water quality is not likely to jeopardize the continued existence of such species or result in the destruction or adverse modification of such species' critical habitat. More stringent modifications may also be developed to protect candidate (C1) species being considered by the U.S. Fish and Wildlife Service (FWS) for listing under section 4 of the ESA, where such modifications are necessary to protect such species.

1. *Aquatic Life.*

a. Aquatic life criteria or values may be modified on a site-specific basis to provide an additional level of protection, pursuant to authority reserved to the States and Tribes under Clean Water Act (CWA) section 510.

Guidance on developing site-specific criteria in these instances is provided in Chapter 3 of the U.S. EPA Water Quality Standards Handbook, Second Edition—Revised (1994).

b. Less stringent site-specific modifications to chronic or acute aquatic life criteria or values may be developed when:

i. The local water quality characteristics such as Ph, hardness, temperature, color, etc., alter the biological availability or toxicity of a pollutant; or

ii. The sensitivity of the aquatic organisms species that ''occur at the site'' differs from the species actually tested in developing the criteria. The phrase ''occur at the site'' includes the species, genera, families, orders, classes, and phyla that: are usually present at the site; are present at the site only seasonally due to migration; are present intermittently because they periodically return to or extend their ranges into the site; were present at the site in the past, are not currently present at the site due to degraded conditions, and are expected to return to the site when conditions improve; are present in nearby bodies of water, are not currently present at the site due to degraded conditions, and are expected to be present at the site when conditions improve. The taxa that ''occur at the site'' cannot be determined merely by sampling downstream and/or upstream of the site at one point in time. ''Occur at the site'' does not include taxa that were once present at the site but cannot exist at the site now due to permanent physical alteration of the habitat at the site resulting, for example, from dams, etc.

c. Less stringent modifications also may be developed to acute and chronic aquatic life criteria or values to reflect local physical and hydrological conditions.

Guidance on developing site-specific criteria is provided in Chapter 3 of the U.S. EPA Water Quality Standards Handbook, Second Edition—Revised (1994).

d. Any modifications to protect threatened or endangered aquatic species required by procedure 1.A of this appendix may be accomplished using either of the two following procedures:

i. If the Species Mean Acute Value (SMAV) for a listed or proposed species, or for a surrogate of such species, is lower than the calculated Final Acute Value (FAV), such lower SMAV may be used instead of the calculated FAV in developing site-specific modified criteria; or,

ii. The site-specific criteria may be calculated using the recalculation procedure for site-specific modifications described in Chapter 3 of the U.S. EPA Water Quality Standards Handbook, Second Edition—Revised (1994).

2. *Wildlife.*

a. Wildlife water quality criteria may be modified on a site-specific basis to provide an additional level of protection, pursuant to authority reserved to the States and Tribes under CWA section 510.

b. Less stringent site-specific modifications to wildlife water quality criteria may be developed when a site-specific bioaccumulation factor (BAF) is derived which is lower than the system-wide BAF derived under appendix B of this part. The modification must consider both the mobility of prey organisms and wildlife populations in defining the site for which criteria are developed. In addition, there must be a showing that:

i. Any increased uptake of the toxicant by prey species utilizing the site will not cause adverse effects in wildlife populations; and

ii. Wildlife populations utilizing the site or downstream waters will continue to be fully protected.

c. Any modification to protect endangered or threatened wildlife species required by procedure 1.A of this appendix must consider both the mobility of prey organisms and wildlife populations in defining the site for which criteria are developed, and may be accomplished by using the following recommended method.

i. The methodology presented in appendix D to part 132 is used, substituting appropriate species-specific toxicological, epidemiological, or exposure information, including changes to the BAF;

ii. An interspecies uncertainty factor of 1 should be used where epidemiological data are available for the species in question. If necessary, species-specific exposure parameters can be derived as presented in Appendix D of this part;

iii. An intraspecies uncertainty factor (to account for protection of individuals within a wildlife population) should be applied in the denominator of the effect part of the wildlife equation in appendix D of this part in a manner consistent with the other uncertainty factors described in appendix D of this part; and

iv. The resulting wildlife value for the species in question should be compared to the two class-specific wildlife values which were previously calculated, and the lowest of the three shall be selected as the site-specific modification.

Note: Further discussion on the use of this methodology may be found in the Great Lakes Water Quality Initiative Technical Support Document for Wildlife Criteria.

3. *BAFs.*

a. BAFs may be modified on a site-specific basis to larger values, pursuant to the authority reserved to the States and Tribes under CWA section 510, where reliable data show that local bioaccumulation is greater than the system-wide value.

b. BAFs may be modified on a site-specific basis to lower values, where scientifically defensible, if:

i. The fraction of the total chemical that is freely dissolved in the ambient water is different than that used to derive the system-wide BAFs (i.e., the concentrations of particulate organic carbon and the dissolved organic carbon are different than those used to derive the system-wide BAFs);

ii. Input parameters of the Gobas model, such as the structure of the aquatic food web and the disequilibrium constant, are different at the site than those used to derive the system-wide BAFs;

iii. The percent lipid of aquatic organisms that are consumed and occur at the site is different than that used to derive the system-wide BAFs; or

iv. Site-specific field-measured BAFs or biota-sediment accumulation factor (BSAFs) are determined.

If site-specific BAFs are derived, they shall be derived using the methodology in appendix B of this part.

c. Any more stringent modifications to protect threatened or endangered species required by procedure 1.A of this appendix shall be derived using procedures set forth in the methodology in appendix B of this part.

4. *Human Health.*

a. Human health criteria or values may be modified on a site-specific basis to provide an additional level of protection, pursuant to authority reserved to the States and Tribes under CWA section 510. Human health criteria or values shall be modified on a site-specific basis to provide additional protection appropriate for highly exposed subpopulations.

b. Less stringent site-specific modifications to human health criteria or values may be developed when:

i. local fish consumption rates are lower than the rate used in deriving human health criteria or values under appendix C of this part; and/or

ii. a site-specific BAF is derived which is lower than that used in deriving human health criteria or values under appendix C of this part.

B. *Notification Requirements.* When a State proposes a site-specific modification to a criterion or value as allowed in section 4.A above, the State should notify the other Great Lakes States of such a proposal and, for less stringent criteria, supply appropriate justification.

C. *References.*

U.S. EPA. 1984. Water Quality Standards Handbook—Revised. Chapter 3 and Appendices. U.S. Environmental Protection Agency, Office of Water Resource Center (RC–4100), 401 M Street, SW., Washington, DC 20960.

Procedure 2: Variances from Water Quality Standards for Point Sources

The Great Lakes States or Tribes may adopt water quality standards (WQS) variance procedures and may grant WQS variances for point sources pursuant to such procedures. Variance procedures shall be consistent with (as protective as) the provisions in this procedure.

A. *Applicability.* A State or Tribe may grant a variance to a WQS which is the basis of a water quality-based effluent limitation included in a National Pollutant Discharge Elimination System (NPDES) permit. A WQS variance applies only to the permittee requesting the variance and only to the pollutant or pollutants specified in the variance. A variance does not affect, or require the State or Tribe to modify, the corresponding water quality standard for the waterbody as a whole.

1. This provision shall not apply to new Great Lakes dischargers or recommencing dischargers.

2. A variance to a water quality standard shall not be granted that would likely jeopardize the continued existence of any endangered or threatened species listed under Section 4 of the Endangered Species Act (ESA) or result in the destruction or adverse modification of such species' critical habitat.

3. A WQS variance shall not be granted if standards will be attained by implementing effluent limits required under sections 301(b) and 306 of the Clean Water Act (CWA) and by the permittee implementing cost-effective and reasonable best management practices for nonpoint source control.

B. *Maximum Timeframe for Variances.* A WQS variance shall not exceed five years or the term of the NPDES permit, whichever is less. A State or Tribe shall review, and modify as necessary, WQS variances as part of each water quality standards review pursuant to section 303(c) of the CWA.

C. *Conditions to Grant a Variance.* A variance may be granted if:

1. The permittee demonstrates to the State or Tribe that attaining the WQS is not feasible because:

a. Naturally occurring pollutant concentrations prevent the attainment of the WQS;

b. Natural, ephemeral, intermittent or low flow conditions or water levels prevent the attainment of the WQS, unless these conditions may be compensated for by the discharge of sufficient volume of effluent to enable WQS to be met without violating State or Tribal water conservation requirements;

c. Human-caused conditions or sources of pollution prevent the attainment of the WQS and cannot be remedied, or would cause more environmental damage to correct than to leave in place;

d. Dams, diversions or other types of hydrologic modifications preclude the attainment of the WQS, and it is not feasible to restore the waterbody to its original condition or to operate such modification in a way that would result in the attainment of the WQS;

e. Physical conditions related to the natural features of the waterbody, such as the lack of a proper substrate cover, flow, depth, pools, riffles, and the like, unrelated to chemical water quality, preclude attainment of WQS; or

f. Controls more stringent than those required by sections 301(b) and 306 of the CWA would result in substantial and widespread economic and social impact.

2. In addition to the requirements of C.1, above, the permittee shall also:

a. Show that the variance requested conforms to the requirements of the State's or Tribe's antidegradation procedures; and

b. Characterize the extent of any increased risk to human health and the environment associated with granting the variance compared with compliance with WQS absent the variance, such that the State or Tribe is able to conclude that any such increased risk is consistent with the protection of the public health, safety and welfare.

D. *Submittal of Variance Application.* The permittee shall submit an application for a variance to the regulatory authority issuing the permit. The application shall include:

1. All relevant information demonstrating that attaining the WQS is not feasible based on one or more of the conditions in section C.1 of this procedure; and,

2. All relevant information demonstrating compliance with the conditions in section C.2 of this procedure.

E. *Public Notice of Preliminary Decision.* Upon receipt of a complete application for a variance, and upon making a preliminary decision regarding the variance, the State or Tribe shall public notice the request and preliminary decision for public comment pursuant to the regulatory authority's Administrative Procedures Act and shall notify the other Great Lakes States and Tribes of the preliminary decision. This public notice requirement may be satisfied by including the supporting information for the variance and the preliminary decision in the public notice of a draft NPDES permit.

F. *Final Decision on Variance Request.* The State or Tribe shall issue a final decision on the variance request within 90 days of the expiration of the public comment period required in section E of this procedure. If all or part of the variance is approved by the State or Tribe, the decision shall include all permit conditions needed to implement those parts of the variance so approved. Such permit conditions shall, at a minimum, require:

1. Compliance with an initial effluent limitation which, at the time the variance is granted, represents the level currently achievable by the permittee, and which is no less stringent than that achieved under the previous permit;

2. That reasonable progress be made toward attaining the water quality standards for the waterbody as a whole through appropriate conditions;

3. When the duration of a variance is shorter than the duration of a permit, compliance with an effluent limitation sufficient to meet the underlying water quality standard, upon the expiration of said variance; and

4. A provision that allows the permitting authority to reopen and modify the permit based on any State or Tribal triennial water quality standards revisions to the variance.

The State shall deny a variance request if the permittee fails to make the demonstrations required under section C of this procedure.

G. *Incorporating Variance into Permit.* The State or Tribe shall establish and incorporate into the permittee's NPDES permit all conditions needed to implement the variance as determined in section F of this procedure.

H. *Renewal of Variance.* A variance may be renewed, subject to the requirements of sections A through G of this procedure. As part of any renewal application, the permittee shall again demonstrate that attaining WQS is not feasible based on the requirements of section C of this procedure. The permittee's application shall also contain information concerning its compliance with the conditions incorporated into its permit as part of the original variance pursuant to sections F and G of this procedure. Renewal of a variance may be denied if the permittee did not comply with the conditions of the original variance.

I. *EPA Approval.* All variances and supporting information shall be submitted by the State or Tribe to the appropriate EPA regional office and shall include:

1. Relevant permittee applications pursuant to section D of this procedure;

2. Public comments and records of any public hearings pursuant to section E of this procedure;

3. The final decision pursuant to section F of this procedure; and,

4. NPDES permits issued pursuant to section G of this procedure.

5. Items required by sections I.1 through I.3. of this procedure shall be submitted by the State within 30 days of the date of the final variance decision. The item required by section I.4 of this procedure shall be submitted in accordance with the State or Tribe Memorandum of Agreement with the Regional Administrator pursuant to 40 CFR 123.24.

6. EPA shall review the State or Tribe submittal for compliance with the CWA pursuant to 40 CFR 123.44, and 40 CFR 131.21.

J. *State WQS Revisions.* All variances shall be appended to the State or Tribe WQS rules.

Procedure 3: Total Maximum Daily Loads, Wasteload Allocations for Point Sources, Load Allocations for Nonpoint Sources, Wasteload Allocations in the Absence of a TMDL, and Preliminary Wasteload Allocations for Purposes of Determining the Need for Water Quality Based Effluent Limits

The Great Lakes States and Tribes shall adopt provisions consistent with (as protective as) this procedure 3 for the purpose of developing Total Maximum Daily Loads (TMDLs), Wasteload Allocations (WLAs) in the Absence of TMDLs, and Preliminary Wasteload Allocations for Purposes of Determining the Need for Water Quality Based Effluent Limits (WQBELs), except as specifically provided.

A. Where a State or Tribe develops an assessment and remediation plan that the State or Tribe certifies meets the requirements of sections B through F of this procedure and public participation requirements applicable to TMDLs, and that has been approved by EPA as meeting those requirements under 40 CFR 130.6, the assessment and remediation plan may be used in lieu of a TMDL for purposes of appendix F to part 132. Assessment and remediation plans under this procedure may include, but are not limited to, Lakewide Management Plans, Remedial Action Plans, and State Water Quality Management Plans. Also, any part of an assessment and remediation plan that also satisfies one or more requirements under Clean Water Act (CWA) section 303(d) or implementing regulations may be incorporated by reference into a TMDL as appropriate. Assessment and remediation plans under this section should be tailored to the level of detail and magnitude for the watershed and pollutant being assessed.

B. *General Conditions of Application.* Except as provided in § 132.4, the following are conditions applicable to establishing TMDLs for all pollutants and pollutant parameters in the Great Lakes System, with the exception of whole effluent toxicity, unless otherwise provided in procedure 6 of appendix F. Where specified, these conditions also apply to wasteload allocations (WLAs) calculated in the absence of TMDLs and to preliminary WLAs for purposes of determining the needs for WQBELs under procedure 5 of appendix F.

1. *TMDLs Required.* TMDLs shall, at a minimum, be established in accordance with the listing and priority setting process established in section 303(d) of the CWA and at 40 CFR 130.7. Where water quality standards cannot be attained immediately, TMDLs must reflect reasonable assurances that water quality standards will be attained in a reasonable period of time. Some TMDLs may be based on attaining water quality standards over a period of time, with specific controls on individual sources being implemented in stages. Determining the reasonable period of time in which water quality standards will be met is a case-specific determination considering a number of factors including, but not limited to: receiving water characteristics; persistence, behavior and ubiquity of pollutants of concern; type of remediation activities necessary; available regulatory and non-regulatory controls; and individual State or Tribal requirements for attainment of water quality standards.

2. *Attainment of Water Quality Standards.* A TMDL must ensure attainment of applicable water quality standards, including all numeric and narrative criteria, Tier I criteria, and Tier II values for each pollutant or pollutants for which a TMDL is established.

3. *TMDL Allocations.*

a. TMDLs shall include WLAs for point sources and load allocations (LAs) for nonpoint sources, including natural background, such that the sum of these allocations is not greater than the loading capacity of the water for the pollutant(s) addressed by the TMDL, minus the sum of a specified margin of safety (MOS) and any capacity reserved for future growth.

b. Nonpoint source LAs shall be based on:

i. Existing pollutant loadings if changes in loadings are not reasonably anticipated to occur;

ii. Increases in pollutant loadings that are reasonably anticipated to occur;

iii. Anticipated decreases in pollutant loadings if such decreased loadings are technically feasible and are reasonably anticipated to occur within a reasonable time period as a result of implementation of best management practices or other load reduction measures. In determining whether anticipated decreases in pollutant loadings are technically feasible and can reasonably be expected to occur within a reasonable period of time, technical and institutional factors shall be considered. These decisions are case-specific and should reflect the particular TMDL under consideration.

c. WLAs. The portion of the loading capacity not assigned to nonpoint sources including background, or to an MOS, or reserved for future growth is allocated to point sources. Upon reissuance, NPDES permits for these point sources must include effluent limitations consistent with WLAs in EPA-approved or EPA-established TMDLs.

d. Monitoring. For LAs established on the basis of subsection b.iii above, monitoring data shall be collected and analyzed in order to validate the TMDL's assumptions, to varify anticipated load reductions, to evaluate the effectiveness of controls being used to implement the TMDL, and to revise the WLAs and LAs as necessary to ensure that water quality standards will be achieved within the time-period established in the TMDL.

4. *WLA Values.* If separate EPA-approved or EPA-established TMDLs are prepared for different segments of the same watershed, and the separate TMDLs each include WLAs for the same pollutant for one or more of the same point sources, then WQBELs for that pollutant for the point source(s) shall be consistent with the most stringent of those WLAs in order to ensure attainment of all applicable water quality standards.

5. *Margin of Safety (MOS).* Each TMDL shall include a MOS sufficient to account for technical uncertainties in establishing the TMDL and shall describe the manner in which the MOS is determined and incorporated into the TMDL. The MOS may be provided by leaving a portion of the loading capacity unallocated or by using conservative modeling assumptions to establish WLAs and LAs. If a portion of the loading capacity is left unallocated to provide a MOS, the amount left unallocated shall be described. If conservative modeling assumptions are relied on to provide a MOS, the specific assumptions providing the MOS shall be identified.

6. *More Stringent Requirements.* States and Tribes may exercise authority reserved to them under section 510 of the CWA to develop more stringent TMDLs (including WLAs and LAs) than are required herein, provided that all LAs in such TMDLs reflect actual nonpoint source loads or those loads that can reasonably be expected to occur within a reasonable time-period as a result of implementing nonpoint source controls.

7. *Accumulation in Sediments.* TMDLs shall reflect, where appropriate and where sufficient data are available, contributions to the water column from sediments inside and outside of any applicable mixing zones. TMDLs shall be sufficiently stringent so as to prevent accumulation of the pollutant of concern in sediments to levels injurious to designated or existing uses, human health, wildlife and aquatic life.

8. *Wet Weather Events.* Notwithstanding the exception provided for the establishment of controls on wet weather point sources in § 132.4(e)(1), TMDLs shall reflect, where appropriate and where sufficient data are available, discharges resulting from wet weather events. This procedure does not provide specific procedures for considering discharges resulting from wet weather events. However, some of the provisions of procedure 3 may be deemed appropriate for considering wet weather events on a case-by-case basis.

9. *Background Concentration of Pollutants.* The representative background concentration of pollutants shall be established in accordance with this subsection to develop TMDLs, WLAs calculated in the absence of a TMDL, or preliminary WLAs for purposes of determining the need for WQBELs under procedure 5 of appendix F. Background loadings may be accounted for in a TMDL through an allocation to a single ''background'' category or through individual allocations to the various background sources.

a. *Definition of Background.* ''Background'' represents all loadings that: (1) flow from upstream waters into the specified watershed, waterbody or waterbody segment for which a TMDL, WLA in the absence of a TMDL or preliminary WLA for the purpose of determining the need for a WQBEL is being developed; (2) enter the specified watershed, waterbody or waterbody segment through atmospheric deposition or sediment release or resuspension; or (3) occur within the watershed, waterbody or waterbody segment as a result of chemical reactions.

b. *Data considerations.* When determining what available data are acceptable for use in calculating background, the State or Tribe should use best professional judgment, including consideration of the sampling location and the reliability of the data through comparison to reported analytical detection levels and quantification levels. When data in more than one of the data sets or categories described in section B.9.c.i through B.9.c.iii below exist, best professional judgment should be used to select the one data set that most accurately reflects or estimates background concentrations. Pollutant degradation and transport information may be considered when utilizing pollutant loading data.

c. *Calculation requirements.* Except as provided below, the representative background concentration for a pollutant in the specified watershed, waterbody or waterbody segment shall be established on a case-by-case basis as the geometric mean of:

i. Acceptable available water column data; or

ii. Water column concentrations estimated through use of acceptable available caged or resident fish tissue data; or

iii. Water column concentrations estimated through use of acceptable available or projected pollutant loading data.

d. *Detection considerations.*

i. Commonly accepted statistical techniques shall be used to evaluate data sets consisting of values both above and below the detection level.

ii. When all of the acceptable available data in a data set or category, such as water column, caged or resident fish tissue or pollutant loading data, are below the level of detection for a pollutant, then all the data for that pollutant in that data set shall be assumed to be zero.

10. *Effluent Flow.* If WLAs are expressed as concentrations of pollutants, the TMDL shall also indicate the point source effluent flows assumed in the analyses. Mass loading limitations established in NPDES permits must be consistent with both the WLA and assumed effluent flows used in establishing the TMDL.

11. *Reserved Allocations.* TMDLs may include reserved allocations of loading capacity to accommodate future growth and additional sources. Where such reserved allocations are not included in a TMDL, any increased loadings of the pollutant for which the TMDL was developed that are due to a new or expanded discharge shall not be allowed unless the TMDL is revised in accordance with these proceudres to include an allocation for the new or expanded discharge.

C. *Mixing Zones for Bioaccumulative Chemicals of Concern (BCCs).* The following requirements shall be applied in establishing TMDLs, WLAs in the absence of TMDLs, and preliminary WLAs for purposes of determining the need for WQBELs under procedure 5 of appendix F, for BCCs:

1. Beginning on March 23, 1997, there shall be no mixing available for new discharges of BCCs to the Great Lakes System. WLAs established through TMDLs, WLAs in the absence of TMDLs, and preliminary WLAs for purposes of determining the need for WQBELs for new discharges of BCCs shall be set equal to the most stringent applicable water quality criteria or values for the BCCs in question.

2. For purposes of section C of procedure 3 of appendix F, new discharges are defined as: (1) discharges from new Great Lakes dischargers; or (2) new or expanded discharges from an existing Great Lakes discharger. All other discharges of BCCs are defined as existing discharges.

3. Up until March 23, 2007, mixing zones for BCCs may be allowed for existing discharges to the Great Lakes System pursuant to the procedures specified in sections D and E of this procedure.

4. Except as provided in sections C.5 and C.6 of this procedure, permits issued on or after March 23, 1997 shall not authorize mixing zones for existing discharges of BCCs to the Great Lakes System after March 23, 2007. After March 23, 2007, WLAs established through TMDLs, WLAs established in the absence of TMDLs and preliminary WLAs for purposes of determining the need for WQBELs under procedure 5 of appendix F for existing dischrges of BCCs to the Great Lakes System shall be set equal to the most stringent applicable water quality criteria or values for the BCCs in question.

5. *Exception for Water Conservation.* States and Tribes may grant mixing zones for any existing discharge of BCCs to the Great Lakes

System beyond the dates specified in sections C.3 and C.4 of this procedure, where it can be demonstrated, on a case-by-case basis, that failure to grant a mixing zone would preclude water conservation measures that would lead to overall load reductions in BCCs, even though higher concentrations of BCCs occur in the effluent. Such mixing zones must also be consistent with sections D and E of this procedure.

6. *Exception for Technical and Economic Considerations.* States and Tribes may grant mixing zones beyond the dates specified in sections C.3 and C.4 of this procedure for any existing discharges of a BCC to the Great Lakes System upon the request of a discharger subject to the limited circumstances specified in sections C.6.a through C.6.d below. Such mixing zones shall also be consistent with sections D and E of this procedure.

a. The permitting authority must determine that:

i. The discharger is in compliance with and will continue to implement all applicable technology-based treatment and pretreatment requirements of CWA sections 301, 302, 304, 306, 307, 401, and 402, and is in compliance with its existing NPDES water quality-based effluent limitations, including those based on a mixing zone; and

ii. The discharger has reduced and will continue to reduce the loading of the BCC for which a mixing zone is requested to the maximum extent possible.

b. In making the determination in section C.6.a above, the State or Tribal authority should consider:

i. The availability and feasibility, including cost effectiveness, of additional controls or pollution prevention measures for reducing and ultimately eliminating BCCs for that discharger, including those used by similar dischargers;

ii. Whether the discharger or affected communities will suffer unreasonable economic effects if the mixing zone is eliminated;

iii. The extent to which the discharger will implement an ambient monitoring plan to ensure compliance with water quality criteria at the edge of any authorized mixing zone or to ensure consistency with any applicable TMDL or such other strategy consistent with section A of this procedure; and,

iv. Other information the State or Tribe deems appropriate.

c. Any exceptions to the mixing zone elimination provision for existing discharges of BCCs granted pursuant to this section shall:

i. Not result in any less stringent limitations than those existing March 23, 1997;

ii. Not likely jeopardize the continued existence of any endangered or threatened species listed under section 4 of the ESA or result in the destruction or adverse modification of such species' critical habitat;

iii. Be limited to one permit term unless the permitting authority makes a new determination in accordance with this section for each successive permit application in which a mixing zone for the BCC(s) is sought;

iv. Reflect all information relevant to the size of the mixing zone considered by the State or Tribe under subsection b above;

v. Protect all designated and existing uses of the receiving water;

vi. Meet all applicable aquatic life, wildlife and human health criteria and values at the edge of the mixing zone and, as appropriate, within the mixing zone or be consistent with any appropriate TMDL or such other strategy consistent with section A of this procedure;

vii. Ensure the discharger has developed and conducted a pollutant minimization program for the BCC(s) if required to do so under regulations adopted consistent with procedure 8 of appendix F; and

viii. Ensure that alternative means for reducing BCCs elsewhere in the watershed are evaluated.

d. For each draft NPDES permit that would allow a mixing zone for one or more BCCs after March 23, 2007, the fact sheet or statement of basis for the draft permit, required to be made available through public notice under 40 CFR 124.6(e), shall:

i. Specify the mixing provisions used in calculating the permit limits; and

ii. Identify each BCC for which a mixing zone is proposed.

D. *Deriving TMDLs, WLAs, and LAs for Point and Nonpoint Sources: WLAs in the Absence of a TMDL; and Preliminary WLAs for Purposes of Determining the Need for WQBELs for OWGL.* This section addresses conditions for deriving TMDLs for Open Waters of the Great Lakes (OWGL), inland lakes and other waters of the Great Lakes System with no appreciable flow relative to their volumes. State and Tribal procedures to derive TMDLs under this section must be consistent with (as protective as) the general conditions in section B of this procedure, CWA section 303(d), existing regulations (40 CFR 130.7), section C of this procedure, and sections D.1. through D.4 below. State and Tribal procedures to derive WLAs calculated in the absence of a TMDL and preliminary WLAs for purposes of determining the need for WQBELs under procedure 5 of appendix F must be consistent with sections B.9, C.1, C3 through C.6, and D. 1 through D.4 of this procedure.

1. Individual point source WLAs and preliminary WLAs for purposes of determining the need for WQBELs under procedure 5 of appendix F shall assume no greater dilution than one part effluent to 10 parts receiving water for implementation of numeric and narrative chronic criteria and values (including, but not limited to human cancer criteria, human cancer values, human noncancer values, human noncancer criteria, wildlife criteria, and chronic aquatic life criteria and values) unless an alternative mixing zone is demonstrated as appropriate in a mixing zone demonstration conducted pursuant to section F of this procedure. In no case shall a mixing zone be granted that exceeds the area where discharge-induced mixing occurs.

2. Appropriate mixing zone assumptions to be used in calculating load allocations for nonpoint sources shall be determined, consistent with applicable State or Tribal requirements, on a case-by-case basis.

3. WLAs and preliminary WLAs based on acute aquatic life criteria or values shall not exceed the Final Acute Value (FAV), unless a mixing zone demonstration is conducted and approved pursuant to section F of this procedure. If mixing zones from two or more proximate sources interact or overlap, the combined effect must be evaluated to ensure that applicable criteria and values will be met in the area where acute mixing zones overlap.

4. In no case shall a mixing zone be granted that would likely jeopardize the continued existence of any endangered or threatened species listed under section 4 of the ESA or result in the destruction or adverse modification of such species' critical habitat.

E. *Deriving TMDLs, WLAs, and LAs for Point and Nonpoint Sources; WLAs in the Absence of a TMDL; and Preliminary WLAs for the Purposes of Determining the Need for WQBELs for Great Lakes Systems Tributaries and Connecting Channels.* This section describes conditions for deriving TMDLs for tributaries and connecting channels of the Great Lakes System that exhibit appreciable flows relative to their volumes. State and Tribal procedures to derive TMDLs must be consistent with the general conditions listed in section B of this procedure, section C of this procedure, existing TMDL regulations (40 CFR 130.7) and specific conditions E.1 through E.5. State and Tribal procedures to derive WLAs calculated in the absence of a TMDL, and preliminary WLAs for purposes of determining reasonable potential under procedure 5 of this appendix for discharges to tributaries and connecting channels must be consistent with sections B.9, C.1, C.3 through C.6, and E.1 through E.5 of this procedure.

1. *Stream Design.* These design flows must be used unless data exist to demonstrate that an alternative stream design flow is appropriate for stream-specific and pollutant-specific conditions. For purposes of calculating a TMDL, WLAs in the absence of a TMDL, or preliminary WLAs for the purposes of determining reasonable potential under procedure 5 of this appendix, using a steady-state model, the stream design flows shall be:

a. The 7-day, 10-year stream design flow (7Q10), or the 4-day, 3-year biologically-based stream design flow for chronic aquatic life criteria or values;

b. The 1-day, 10-year stream design flow (1Q10), for acute aquatic life criteria or values;

c. The harmonic mean flow for human health criteria or values;

d. The 90-day, 10-year flow (90Q10) for wildlife criteria.

e. TMDLs, WLAs in the absence of TMDLs, and preliminary WLAs for the purpose of determining the need for WQBELs calculated using dynamic modelling do not need to incorporate the stream design flows specified in sections E.1.a through E.1.d of this procedure.

2. *Loading Capacity.* The loading capacity is the greatest amount of loading that a water can receive without violating water quality standards. The loading capacity is initially calculated at the farthest downstream location in the watershed drainage basin. The maximum allowable loading consistent with the attainment of each applicable numeric

criterion or value for a given pollutant is determined by multiplying the applicable criterion or value by the flow at the farthest downstream location in the tributary basin at the design flow condition described above. This loading is then compared to the loadings at sites within the basin to assure that applicable numeric criteria or values for a given pollutant are not exceeded at all applicable sites. The lowest load is then selected as the loading capacity.

3. *Polluant Degradation.* TMDLs, WLAs in the absence of a TMDL and preliminary WLAs for purposes of determining the need for WQBELs under procedure 5 of appendix F shall be based on the assumption that a pollutant does not degrade. However, the regulatory authority may take into account degradation of the pollutant if each of the following conditions are met.

a. Scientifically valid field studies or other relevant information demonstrate that degradation of the pollutant is expected to occur under the full range of environmental conditions expected to be encountered;

b. Scientifically valid field studies or other relevant information address other factors that affect the level of pollutants in the water column including, but not limited to, resuspension of sediments, chemical speciation, and biological and chemical transformation.

4. *Acute Aquatic Life Criteria and Values.* WLAs and LAs established in a TMDL, WLAs in the absence of a TMDL, and preliminary WLAs for the purpose of determining the need for WQBELs based on acute aquatic life criteria or values shall not exceed the FAV, unless a mixing zone demonstration is completed and approved pursuant to section F of this procedure. If mixing zones from two or more proximate sources interact or overlap, the combined effect must be evaluated to ensure that applicable criteria and values will be met in the area where any applicable acute mixing zones overlap. This acute WLA review shall include, but not be limited to, consideration of:

a. The expected dilution under all effluent flow and concentration conditions at stream design flow;

b. Maintenance of a zone of passage for aquatic organisms; and

c. Protection of critical aquatic habitat.

In no case shall a permitting authority grant a mixing zone that would likely jeopardize the continued existence of any endangered or threatened species listed under section 4 of the ESA or result in the destruction or adverse modification of such species' critical habitat.

5. *Chronic Mixing Zones.* WLAs and LAs established in a TMDL, WLAs in the absence of a TMDL, and preliminary WLAs for the purposes of determining the need for WQBELs for protection of aquatic life, wildlife and human health from chronic effects shall be calculated using a dilution fraction no greater than 25 percent of the stream design flow unless a mixing zone demonstration pursuant to section F of this procedure is conducted and approved. A demonstration for a larger mixing zone may be provided, if approved and implemented in accordance with section F of this procedure. In no case shall a permitting authority grant a mixing zone that would likely jeopardize the continued existence of any endangered or threatened species listed under section 4 of the ESA or result in the destruction or adverse modification of such species' critical habitat.

F. *Mixing Zone Demonstration Requirements.*

1. For purposes of establishing a mixing zone other than as specified in sections D and E above, a mixing zone demonstration must:

a. Describe the amount of dilution occurring at the boundaries of the proposed mixing zone and the size, shape, and location of the area of mixing, including the manner in which diffusion and dispersion occur;

b. For sources discharging to the open waters of the Great Lakes (OWGLs), define the location at which discharge-induced mixing ceases;

c. Document the substrate character and geomorphology within the mixing zone;

d. Show that the mixing zone does not interfere with or block passage of fish or aquatic life;

e. Show that the mixing zone will be allowed only to the extent that the level of the pollutant permitted in the waterbody would not likely jeopardize the continued existence of any endangered or threatened species listed under section 4 of the ESA or result in the destruction or adverse modification of such species' critical habitat;

f. Show that the mixing zone does not extend to drinking water intakes;

g. Show that the mixing zone would not otherwise interfere with the designated or existing uses of the receiving water or downstream waters;

h. Document background water quality concentrations;

i. Show that the mixing zone does not promote undesirable aquatic life or result in a dominance of nuisance species; and

j. Provide that by allowing additional mixing/dilution:

i. Substances will not settle to form objectionable deposits;

ii. Floating debris, oil, scum, and other matter in concentrations that form nuisances will not be produced; and

iii. Objectionable color, odor, taste or turbidity will not be produced.

2. In addition, the mixing zone demonstration shall address the following factors:

a. Whether or not adjacent mixing zones overlap;

b. Whether organisms would be attracted to the area of mixing as a result of the effluent character; and

c. Whether the habitat supports endemic or naturally occurring species.

3. The mixing zone demonstration must be submitted to EPA for approval. Following approval of a mixing zone demonstration consistent with sections F.1 and F.2, adjustment to the dilution ratio specified in section D.1 of this procedure shall be limited to the dilution available in the area where discharger-induced mixing occurs.

4. The mixing zone demonstration shall be based on the assumption that a pollutant does not degrade within the proposed mixing zone, unless:

a. Scientifically valid field studies or other relevant information demonstrate that degradation of the pollutant is expected to occur under the full range of environmental conditions expected to be encountered; and

b. Scientifically valid field studies or other relevant information address other factors that affect the level of pollutants in the water column including, but not limited to, resuspension of sediments, chemical speciation, and biological and chemical transformation.

Procedure 4: Additivity

The Great Lakes States and Tribes shall adopt additivity provisions consistent with (as protective as) this procedure.

A. The Great Lakes States and Tribes shall adopt provisions to protect human health from the potential adverse additive effects from both the noncarcinogenic and carcinogenic components of chemical mixtures in effluents. For the chlorinated dibenzo-p-dioxins (CDDs) and chlorinated dibenzofurans (CDFs) listed in Table 1, potential adverse additive effects in effluents shall be accounted for in accordance with section B of this procedure.

B. *Toxicity Equivalency Factors (TEFs)/ Bioaccumulation Equivalency Factors (BEFs).*

1. The TEFs in Table 1 and BEFs in Table 2 shall be used when calculating a 2,3,7,8-TCDD toxicity equivalence concentration in effluent to be used when implementing both human health noncancer and cancer criteria. The chemical concentration of each CDDs and CDFs in effluent shall be converted to a 2,3,7,8-TCDD toxicity equivalence concentration in effluent by (a) multiplying the chemical concentration of each CDDs and CDFs in the effluent by the appropriate TEF in Table 1 below, (b) multiplying each product from step (a) by the BEF for each CDDs and CDFs in Table 2 below, and (c) adding all final products from step (b). The equation for calculating the 2,3,7,8-TCDD toxicity equivalence concentration in effluent is:

$$(TEC)_{tcdd} = \sum (C)_x (TEF)_x (BEF)_x$$

where:

$(TEC)_{tcdd}$=2,3,7,8-TCDD toxicity equivalence concentration in effluent

$(C)_x$=concentration of total chemical x in effluent

$(TEF)_x$=TCDD toxicity equivalency factor for x

$(BEF)_x$=TCDD bioaccumulation equivalency factor for x

2. The 2,3,7,8-TCDD toxicity equivalence concentration in effluent shall be used when developing waste load allocations under procedure 3, preliminary waste load allocations for purposes of determining reasonable potential under procedure 5, and for purposes of establishing effluent quality limits under procedure 5.

TABLE 1.—TOXICITY EQUIVALENCY FACTORS FOR CDDS AND CDFS

Congener	TEF
2,3,7,8-TCDD	1.0
1,2,3,7,8-PeCDD	0.5

TABLE 1.—TOXICITY EQUIVALENCY FACTORS FOR CDDS AND CDFS—Continued

Congener	TEF
1,2,3,4,7,8-HxCDD	0.1
1,2,3,6,7,8-HxCDD	0.1
1,2,3,7,8,9-HxCDD	0.1
1,2,3,4,6,7,8-HpCDD	0.01
OCDD	0.001
2,3,7,8-TCDF	0.1
1,2,3,7,8-PeCDF	0.05
2,3,4,7,8-PeCDF	0.5
1,2,3,4,7,8-HxCDF	0.1
1,2,3,6,7,8-HxCDF	0.1
2,3,4,6,7,8-HxCDF	0.1
1,2,3,7,8,9-HxCDF	0.1
1,2,3,4,6,7,8-HpCDF	0.01
1,2,3,4,7,8,9-HpCDF	0.01
OCDF	0.001

TABLE 2.—BIOACCUMULATION EQUIVALENCY FACTORS FOR CDDS AND CDFS

Congener	BEF
2,3,7,8-TCDD	1.0
1,2,3,7,8-PeCDD	0.9
1,2,3,4,7,8-HxCDD	0.3
1,2,3,6,7,8-HxCDD	0.1
1,2,3,7,8,9-HxCDD	0.1
1,2,3,4,6,7,8-HpCDD	0.05
OCDD	0.01
2,3,7,8-TCDF	0.8
1,2,3,7,8-PeCDF	0.2
2,3,4,7,8-PeCDF	1.6
1,2,3,4,7,8-HxCDF	0.08
1,2,3,6,7,8-HxCDF	0.2
2,3,4,6,7,8-HxCDF	0.7
1,2,3,7,8,9-HxCDF	0.6
1,2,3,4,6,7,8-HpCDF	0.01
1,2,3,4,7,8,9-HpCDF	0.4
OCDF	0.02

Procedure 5: Reasonable Potential To Exceed Water Quality Standards

Great Lakes States and Tribes shall adopt provisions consistent with (as protective as) this procedure. If a permitting authority determines that a pollutant is or may be discharged into the Great Lakes System at a level which will cause, have the reasonable potential to cause, or contribute to an excursion above any Tier I criterion or Tier II value, the permitting authority shall incorporate a water quality-based effluent limitation (WQBEL) in an NPDES permit for the discharge of that pollutant. When facility-specific effluent monitoring data are available, the permitting authority shall make this determination by developing preliminary effluent limitations (PEL) and comparing those effluent limitations to the projected effluent quality (PEQ) of the discharge in accordance with the following procedures. In all cases, the permitting authority shall use any valid, relevant, representative information that indicates a reasonable potential to exceed any Tier I criterion or Tier II value.

A. *Developing Preliminary Effluent Limitations on the Discharge of a Pollutant From a Point Source.*

1. The permitting authority shall develop preliminary wasteload allocations (WLAs) for the discharge of the pollutant from the point source to protect human health, wildlife, acute aquatic life, and chronic aquatic life, based upon any existing Tier I criteria. Where there is no Tier I criterion nor sufficient data to calculate a Tier I criterion, the permitting authority shall calculate a Tier II value for such pollutant for the protection of human health, and aquatic life and the preliminary WLAs shall be based upon such values. Where there is insufficient data to calculate a Tier II value, the permitting authority shall apply the procedure set forth in section C of this procedure to determine whether data must be generated to calculate a Tier II value.

2. The following provisions in procedure 3 of appendix F shall be used as the basis for determining preliminary WLAs in accordance with section 1 of this procedure: procedure 3.B.9, Background Concentrations of Pollutants; procedure 3.C, Mixing Zones for Bioaccumulative Chemicals of Concern (BCCs), procedures 3.C.1, and 3.C.3 through 3.C.6; procedure 3.D, Deriving TMDLs for Discharges to Lakes (when the receiving water is an open water of the Great Lakes (OWGL), an inland lake or other water of the Great Lakes System with no appreciable flow relative to its volume); procedure 3.E, Deriving TMDLs, WLAs and Preliminary WLAs, and load allocations (LAs) for Discharges to Great Lakes System Tributaries (when the receiving water is a tributary or connecting channel of the Great Lakes that exhibits appreciable flow relative to its volume); and procedure 3.F, Mixing Zone Demonstration Requirements.

3. The permitting authority shall develop PELs consistent with the preliminary WLAs developed pursuant to sections A.1 and A.2 of this procedure, and in accordance with existing State or Tribal procedures for converting WLAs into WQBELs. At a minimum:

a. The PELs based upon criteria and values for the protection of human health and wildlife shall be expressed as monthly limitations;

b. The PELs based upon criteria and values for the protection of aquatic life from chronic effects shall be expressed as either monthly limitations or weekly limitations; and

c. The PELs based upon the criteria and values for the protection of aquatic life from acute effects shall be expressed as daily limitations.

B. *Determining Reasonable Potential Using Effluent Pollutant Concentration Data.*

If representative, facility-specific effluent monitoring data samples are available for a pollutant discharged from a point source to the waters of the Great Lakes System, the permitting authority shall apply the following procedures:

1. The permitting authority shall specify the PEQ as the 95 percent confidence level of the 95th percentile based on a log-normal distribution of the effluent concentration; or the maximum observed effluent concentration, whichever is greater. In calculating the PEQ, the permitting authority shall identify the number of effluent samples and the coefficient of variation of the effluent data, obtain the appropriate multiplying factor from Table 1 of procedure 6 of appendix F, and multiply the maximum effluent concentration by that factor. The coefficient of variation of the effluent data shall be calculated as the ratio of the standard deviation of the effluent data divided by the arithmetic average of the effluent data, except that where there are fewer than ten effluent concentration data points the coefficient of variation shall be specified as 0.6. If the PEQ exceeds any of the PELs developed in accordance with section A.3 of this procedure, the permitting authority shall establish a WQBEL in a NPDES permit for such pollutant.

2. In lieu of following the procedures under section B.1 of this procedure, the permitting authority may apply procedures consistent with the following:

a. The permitting authority shall specify the PEQ as the 95th percentile of the distribution of the projected population of daily values of the facility-specific effluent monitoring data projected using a scientifically defensible statistical method that accounts for and captures the long-term daily variability of the effluent quality, accounts for limitations associated with sparse data sets and, unless otherwise shown by the effluent data set, assumes a lognormal distribution of the facility-specific effluent data. If the PEQ exceeds the PEL based on the criteria and values for the protection of aquatic life from acute effects developed in accordance with section A.3 of this procedure, the permitting authority shall establish a WQBEL in an NPDES permit for such pollutant;

b. The permitting authority shall calculate the PEQ as the 95th percentile of the distribution of the projected population of monthly averages of the facility-specific effluent monitoring data using a scientifically defensible statistical method that accounts for and captures the long-term variability of the monthly average effluent quality, accounts for limitations associated with sparse data sets and, unless otherwise shown by the effluent data set, assumes a lognormal distribution of the facility-specific effluent data. If the PEQ exceeds the PEL based on criteria and values for the protection of aquatic life from chronic effects, human health or wildlife developed in accordance with section A.3 of this procedure, the permitting authority shall establish a WQBEL in an NPDES permit for such pollutant; and

c. The permitting authority shall calculate the PEQ as the 95th percentile of the distribution of the projected population of weekly averages of the facility-specific effluent monitoring data using a scientifically defensible statistical method that accounts for and captures the long-term variability of the weekly average effluent quality, accounts for limitations associated with sparse data sets and, unless otherwise shown by the effluent data set, assumes a lognormal distribution of the facility-specific effluent data. If the PEQ exceeds the PEL based on criteria and values to protect aquatic life from chronic effects developed in accordance with section A.3 of this procedure, the permitting

authority shall establish a WQBEL in an NPDES permit for such pollutant.

C. *Developing Necessary Data to Calculate Tier II Values Where Such Data Does Not Currently Exist.*

1. Except as provided in sections C.2, C.4, or D of this procedure, for each pollutant listed in Table 6 of part 132 that a permittee reports as known or believed to be present in its effluent, and for which pollutant data sufficient to calculate Tier II values for non-cancer human health, acute aquatic life and chronic aquatic life do not exist, the permitting authority shall take the following actions:

a. The permitting authority shall use all available, relevant information, including Quantitative Structure Activity Relationship information and other relevant toxicity information, to estimate ambient screening values for such pollutant which will protect humans from health effects other than cancer, and aquatic life from acute and chronic effects.

b. Using the procedures specified in sections A.1 and A.2 of this procedure, the permitting authority shall develop preliminary WLAs for the discharge of the pollutant from the point source to protect human health, acute aquatic life, and chronic aquatic life, based upon the estimated ambient screening values.

c. The permitting authority shall develop PELs in accordance with section A.3 of this procedure, which are consistent with the preliminary WLAs developed in accordance with section C.1.b of this procedure.

d. The permitting authority shall compare the PEQ developed according to the procedures set forth in section B of this procedure to the PELs developed in accordance with section C.1.c of this procedure. If the PEQ exceeds any of the PELs, the permitting authority shall generate or require the permittee to generate the data necessary to derive Tier II values for noncancer human health, acute aquatic life and chronic aquatic life.

e. The data generated in accordance with section C.1.d of this procedure shall be used in calculating Tier II values as required under section A.1 of this procedure. The calculated Tier II value shall be used in calculating the preliminary WLA and PEL under section A of this procedure, for purposes of determining whether a WQBEL must be included in the permit. If the permitting authority finds that the PEQ exceeds the calculated PEL, a WQBEL for the pollutant or a permit limit on an indicator parameter consistent with 40 CFR 122.44(d)(1)(vi)(C) must be included in the permit.

2. With the exception of bioaccumulative chemicals of concern (BCCs), a permitting authority is not required to apply the procedures set forth in section C.1 of this procedure or include WQBELs to protect aquatic life for any pollutant listed in Table 6 of part 132 discharged by an existing point source into the Great Lakes System, if:

a. There is insufficient data to calculate a Tier I criterion or Tier II value for aquatic life for such pollutant;

b. The permittee has demonstrated through a biological assessment that there are no acute or chronic effects on aquatic life in the receiving water; and

c. The permittee has demonstrated in accordance with procedure 6 of this appendix that the whole effluent does not exhibit acute or chronic toxicity.

3. Nothing in sections C.1 or C.2 of this procedure shall preclude or deny the right of a permitting authority to:

a. Determine, in the absence of the data necessary to derive a Tier II value, that the discharge of the pollutant will cause, have the reasonable potential to cause, or contribute to an excursion above a narrative criterion for water quality; and

b. Incorporate a WQBEL for the pollutant into an NPDES permit.

4. If the permitting authority develops a WQBEL consistent with section C.3 of this procedure, and the permitting authority demonstrates that the WQBEL developed under section C.3 of this procedure is at least as stringent as a WQBEL that would have been based upon the Tier II value or values for that pollutant, the permitting authority shall not be obligated to generate or require the permittee to generate the data necessary to derive a Tier II value or values for that pollutant.

D. *Consideration of Intake Pollutants in Determining Reasonable Potential.*

1. *General.*

a. Any procedures adopted by a State or Tribe for considering intake pollutants in water quality-based permitting shall be consistent with this section and section E.

b. The determinations under this section and section E shall be made on a pollutant-by-pollutant, outfall-by-outfall, basis.

c. This section and section E apply only in the absence of a TMDL applicable to the discharge prepared by the State or Tribe and approved by EPA, or prepared by EPA pursuant to 40 CFR 130.7(d), or in the absence of an assessment and remediation plan submitted and approved in accordance with procedure 3.A. of appendix F. This section and section E do not alter the permitting authority's obligation under 40 CFR 122.44(d)(vii)(B) to develop effluent limitations consistent with the assumptions and requirements of any available WLA for the discharge, which is part of a TMDL prepared by the State or Tribe and approved by EPA pursuant to 40 CFR 130.7, or prepared by EPA pursuant to 40 CFR 130.7(d).

2. *Definition of Same Body of Water.*

a. This definition applies to this section and section E of this procedure.

b. An intake pollutant is considered to be from the same body of water as the discharge if the permitting authority finds that the intake pollutant would have reached the vicinity of the outfall point in the receiving water within a reasonable period had it not been removed by the permittee. This finding may be deemed established if:

i. The background concentration of the pollutant in the receiving water (excluding any amount of the pollutant in the facility's discharge) is similar to that in the intake water;

ii. There is a direct hydrological connection between the intake and discharge points; and

iii. Water quality characteristics (e.g., temperature, Ph, hardness) are similar in the intake and receiving waters.

c. The permitting authority may also consider other site-specific factors relevant to the transport and fate of the pollutant to make the finding in a particular case that a pollutant would or would not have reached the vicinity of the outfall point in the receiving water within a reasonable period had it not been removed by the permittee.

d. An intake pollutant from groundwater may be considered to be from the same body of water if the permitting authority determines that the pollutant would have reached the vicinity of the outfall point in the receiving water within a reasonable period had it not been removed by the permittee, except that such a pollutant is not from the same body of water if the groundwater contains the pollutant partially or entirely due to human activity, such as industrial, commercial, or municipal operations, disposed actions, or treatment processes.

e. An intake pollutant is the amount of a pollutant that is present in waters of the United States (including groundwater as provided in section D.2.d of this procedure) at the time it is withdrawn from such waters by the discharger or other facility (e.g., public water supply) supplying the discharger with intake water.

3. *Reasonable Potential Determination.*

a. The permitting authority may use the procedure described in this section of procedure 5 in lieu of procedures 5.A through C provided the conditions specified below are met.

b. The permitting authority may determine that there is no reasonable potential for the discharge of an identified intake pollutant or pollutant parameter to cause or contribute to an excursion above a narrative or numeric water quality criterion within an applicable water quality standard where a discharger demonstrates to the satisfaction of the permitting authority (based upon information provided in the permit application or other information deemed necessary by the permitting authority) that:

i. The facility withdraws 100 percent of the intake water containing the pollutant from the same body of water into which the discharge is made;

ii. The facility does not contribute any additional mass of the identified intake pollutant to its wastewater;

iii. The facility does not alter the identified intake pollutant chemically or physically in a manner that would cause adverse water quality impacts to occur that would not occur if the pollutants were left in-stream;

iv. The facility does not increase the identified intake pollutant concentration, as defined by the permitting authority, at the edge of the mixing zone, or at the point of discharge if a mixing zone is not allowed, as compared to the pollutant concentration in the intake water, unless the increased concentration does not cause or contribute to an excursion above an applicable water quality standard; and

v. The timing and location of the discharge would not cause adverse water quality impacts to occur that would not occur if the identified intake pollutant were left in-stream.

c. Upon a finding under section D.3.b of this procedure that a pollutant in the

discharge does not cause, have the reasonable potential to cause, or contribute to an excursion above an applicable water quality standard, the permitting authority is not required to include a WQBEL for the identified intake pollutant in the facility's permit, provided:

i. The NPDES permit fact sheet or statement of basis includes a specific determination that there is no reasonable potential for the discharge of an identified intake pollutant to cause or contribute to an excursion above an applicable narrative or numeric water quality criterion and references appropriate supporting documentation included in the administrative record;

ii. The permit requires all influent, effluent, and ambient monitoring necessary to demonstrate that the conditions in section D.3.b of this procedure are maintained during the permit term; and

iii. The permit contains a reopener clause authorizing modification or revocation and reissuance of the permit if new information indicates changes in the conditions in section D.3.b of this procedure.

d. Absent a finding under section D.3.b of this procedure that a pollutant in the discharge does not cause, have the reasonable potential to cause, or contribute to an excursion above an applicable water quality standard, the permitting authority shall use the procedures under sections 5.A through C of this procedure to determine whether a discharge causes, has the reasonable potential to cause, or contribute to an excursion above an applicable narrative or numeric water quality criterion.

E. *Consideration of Intake Pollutants in Establishing WQBELs.*

1. *General.* This section applies only when the concentration of the pollutant of concern upstream of the discharge (as determined using the provisions in procedure 3.B.9 of appendix F) exceeds the most stringent applicable water quality criterion for that pollutant.

2. The requirements of sections D.1–D.2 of this procedure shall also apply to this section.

3. *Intake Pollutants from the Same Body of Water.*

a. In cases where a facility meets the conditions in sections D.3.b.i and D.3.b.iii through D.3.b.v of this procedure, the permitting authority may establish effluent limitations allowing the facility to discharge a mass and concentration of the pollutant that are no greater than the mass and concentration of the pollutant identified in the facility's intake water (''no net addition limitations''). The permit shall specify how compliance with mass and concentration limitations shall be assessed. No permit may authorize ''no net addition limitations'' which are effective after March 23, 2007. After that date, WQBELs shall be established in accordance with procedure 5.F.2 of appendix F.

b. Where proper operation and maintenance of a facility's treatment system results in removal of a pollutant, the permitting authority may establish limitations that reflect the lower mass and/or concentration of the pollutant achieved by such treatment, taking into account the feasibility of establishing such limits.

c. For pollutants contained in intake water provided by a water system, the concentration of the intake pollutant shall be determined at the point where the raw water supply is removed from the same body of water, except that it shall be the point where the water enters the water supplier's distribution system where the water treatment system removes any of the identified pollutants from the raw water supply. Mass shall be determined by multiplying the concentration of the pollutant determined in accordance with this paragraph by the volume of the facility's intake flow received from the water system.

4. *Intake Pollutants from a Different Body of Water.* Where the pollutant in a facility's discharge originates from a water of the United States that is not the same body of water as the receiving water (as determined in accordance with section D.2 of this procedure), WQBELs shall be established based upon the most stringent applicable water quality criterion for that pollutant.

5. *Multiple Sources of Intake Pollutants.* Where a facility discharges intake pollutants that originate in part from the same body of water, and in part from a different body of water, the permitting authority may apply the procedures of sections E.3 and E.4 of this procedure to derive an effluent limitation reflecting the flow-weighted average of each source of the pollutant, provided that adequate monitoring to determine compliance can be established and is included in the permit.

F. *Other Applicable Conditions.*

1. In addition to the above procedures, effluent limitations shall be established to comply with all other applicable State, Tribal and Federal laws and regulations, including technology-based requirements and antidegradation policies.

2. Once the permitting authority has determined in accordance with this procedure that a WQBEL must be included in an NPDES permit, the permitting authority shall:

a. Rely upon the WLA established for the point source either as part of any TMDL prepared under procedure 3 of this appendix and approved by EPA pursuant to 40 CFR 130.7, or as part of an assessment and remediation plan developed and approved in accordance with procedure 3.A of this appendix, or, in the absence of such TMDL or plan, calculate WLAs for the protection of acute and chronic aquatic life, wildlife and human health consistent with the provisions referenced in section A.1 of this procedure for developing preliminary wasteload allocations, and

b. Develop effluent limitations consistent with these WLAs in accordance with existing State or Tribal procedures for converting WLAs into WQBELs.

3. When determining whether WQBELs are necessary, information from chemical-specific, whole effluent toxicity and biological assessments shall be considered independently.

4. If the geometric mean of a pollutant in fish tissue samples collected from a waterbody exceeds the tissue basis of a Tier I criterion or Tier II value, after consideration of the variability of the pollutant's bioconcentration and bioaccumulation in fish, each facility that discharges detectable levels of such pollutant to that water has the reasonable potential to cause or contribute to an excursion above a Tier I criteria or a Tier II value and the permitting authority shall establish a WQBEL for such pollutant in the NPDES permit for such facility.

Procedure 6: Whole Effluent Toxicity Requirements

The Great Lakes States and Tribes shall adopt provisions consistent with (as protective as) procedure 6 of appendix F of part 132.

The following definitions apply to this part:

Acute toxic unit (TU_a). $100/LC_{50}$ where the LC_{50} is expressed as a percent effluent in the test medium of an acute whole effluent toxicity (WET) test that is statistically or graphically estimated to be lethal to 50 percent of the test organisms.

Chronic toxic unit (TU_c). 100/NOEC or $100/IC_{25}$, where the NOEC and IC_{25} are expressed as a percent effluent in the test medium.

Inhibition concentration 25 (IC_{25}). the toxicant concentration that would cause a 25 percent reduction in a non-quantal biological measurement for the test population. For example, the IC_{25} is the concentration of toxicant that would cause a 25 percent reduction in mean young per female or in growth for the test population.

No observed effect concentration (NOEC). The highest concentration of toxicant to which organisms are exposed in a full life-cycle or partial life-cycle (short-term) test, that causes no observable adverse effects on the test organisms (i.e., the highest concentration of toxicant in which the values for the observed responses are not statistically significantly different from the controls).

A. *Whole Effluent Toxicity Requirements.* The Great Lakes States and Tribes shall adopt whole effluent toxicity provisions consistent with the following:

1. A numeric acute WET criterion of 0.3 acute toxic units (TU_a) measured pursuant to test methods in 40 CFR part 136, or a numeric interpretation of a narrative criterion establishing that 0.3 TU_a measured pursuant to test methods in 40 CFR part 136 is necessary to protect aquatic life from acute effects of WET. At the discretion of the permitting authority, the foregoing requirement shall not apply in an acute mixing zone that is sized in accordance with EPA-approved State and Tribal methods.

2. A numeric chronic WET criterion of one chronic toxicity unit (TU_c) measured pursuant to test methods in 40 CFR part 136, or a numeric interpretation of a narrative criterion establishing that one TU_c measured pursuant to test methods in 40 CFR part 136 is necessary to protect aquatic life from the chronic effects of WET. At the discretion of the permitting authority, the foregoing requirements shall not apply within a chronic mixing zone consistent with: (a) procedures 3.D.1 and 3.D.4, for discharges to the open of the Great Lakes (OWGL), inland

lakes and other waters of the Great Lakes System with no appreciable flow relative to their volume, or (b) procedure 3.E.5 for discharges to tributaries and connecting channels of the Great Lakes System.

B. *WET Test Methods.* All WET tests performed to implement or ascertain compliance with this procedure shall be performed in accordance with methods established in 40 CFR part 136.

C. *Permit Conditions.*

1. Where a permitting authority determines pursuant to section D of this procedure that the WET of an effluent is or may be discharged at a level that will cause, have the reasonable potential to cause, or contribute to an excursion above any numeric WET criterion or narrative criterion within a State's or Tribe's water quality standards, the permitting authority:

a. Shall (except as provided in section C.1.e of this procedure) establish a water quality-based effluent limitation (WQBEL) or WQBELs for WET consistent with section C.1.b of this procedure;

b. Shall calculate WQBELs pursuant to section C.1.a. of this procedure to ensure attainment of the State's or Tribe's chronic WET criteria under receiving water flow conditions described in procedures 3.E.1.a (or where applicable, with procedure 3.E.1.e) for Great Lakes System tributaries and connecting channels, and with mixing zones no larger than allowed pursuant to section A.2. of this procedure. Shall calculate WQBELs to ensure attainment of the State's or Tribe's acute WET criteria under receiving water flow conditions described in procedure 3.E.1.b (or where applicable, with procedure 3.E.1.e) for Great Lakes System tributaries and connecting channels, with an allowance for mixing zones no greater than specified pursuant to section A.1 of this procedure.

c. May specify in the NPDES permit the conditions under which a permittee would be required to perform a toxicity reduction evaluation.

d. May allow with respect to any WQBEL established pursuant to section C.1.a of this procedure an appropriate schedule of compliance consistent with procedure 9 of appendix F; and

e. May decide on a case-by-case basis that a WQBEL for WET is not necessary if the State's or Tribe's water quality standards do not contain a numeric criterion for WET, and the permitting authority demonstrates in accordance with 40 CFR 122.44(d)(1)(v) that chemical-specific effluent limits are sufficient to ensure compliance with applicable criteria.

2. Where a permitting authority lacks sufficient information to determine pursuant to section D of this procedure whether the WET of an effluent is or may be discharged at levels that will cause, have the reasonable potential to cause, or contribute to an excursion above any numeric WET criterion or narrative criterion within a State's or Tribe's water quality standards, then the permitting authority should consider including in the NPDES permit appropriate conditions to require generation of additional data and to control toxicity if found, such as:

a. WET testing requirements to generate the data needed to adequately characterize the toxicity of the effluent to aquatic life;

b. Language requiring a permit reopener clause to establish WET limits if any toxicity testing data required pursuant to section C.2.a of this procedure indicate that the WET of an effluent is or may be discharged at levels that will cause, have the reasonable potential to cause, or contribute to an excursion above any numeric WET criterion or narrative criterion within a State's or Tribe's water quality standards.

3. Where sufficient data are available for a permitting authority to determine pursuant to section D of this procedure that the WET of an effluent neither is nor may be discharged at a level that will cause, have the reasonable potential to cause, or contribute to an excursion above any numeric WET criterion or narrative criterion within a State's or Tribe's water quality standards, the permitting authority may include conditions and limitations described in section C.2 of this procedure at its discretion.

D. *Reasonable Potential Determinations.* The permitting authority shall take into account the factors described in 40 CFR 122.44(d)(1)(ii) and, where representative facility-specific WET effluent data are available, apply the following requirements in determining whether the WET of an effluent is or may be discharged at a level that will cause, have the reasonable potential to cause, or contribute to an excursion above any numeric WET criterion or narrative criterion within a State's or Tribe's water quality standards.

1. The permitting authority shall characterize the toxicity of the discharge by:

a. Either averaging or using the maximum of acute toxicity values collected within the same day for each species to represent one daily value. The maximum of all daily values for the most sensitive species tested is used for reasonable potential determinations;

b. Either averaging or using the maximum of chronic toxicity values collected within the same calendar month for each species to represent one monthly value. The maximum of such values, for the most sensitive species tested, is used for reasonable potential determinations:

c. Estimating the toxicity values for the missing endpoint using a default acute-chronic ratio (ACR) of 10, when data exist for either acute WET or chronic WET, but not for both endpoints.

2. The WET of an effluent is or may be discharged at a level that will cause, have the reasonable potential to cause, or contribute to an excursion above any numeric acute WET criterion or numeric interpretation of a narrative criterion within a State's or Tribe's water quality standards, when effluent-specific information demonstrates that:

$(TU_a \text{ effluent})\ (B)\ (\text{effluent flow}/(Qad+\text{effluent flow}))>AC$

Where TU_a effluent is the maximum measured acute toxicity of 100 percent effluent determined pursuant to section D.1.a. of this procedure, B is the multiplying factor taken from Table F6–1 of this procedure to convert the highest measured effluent toxicity value to the estimated 95th percentile toxicity value for the discharge, effluent flow is the same effluent flow used to calculate the preliminary wasteload allocations (WLAs) for individual pollutants to meet the acute criteria and values for those pollutants, AC is the numeric acute WET criterion or numeric interpretation of a narrative criterion established pursuant to section A.1 of this procedure and expressed in TU_a, and Qad is the amount of the receiving water available for dilution calculated using: (i) the specified design flow(s) for tributaries and connecting channels in section C.1.b of this procedure, or where appropriate procedure 3.E.1.e of appendix F, and using EPA-approved State and Tribal procedures for establishing acute mixing zones in tributaries and connecting channels, or (ii) the EPA-approved State and Tribal procedures for establishing acute mixing zones in OWGLs. Where there are less than 10 individual WET tests, the multiplying factor taken from Table F6–1 of this procedure shall be based on a coefficient of variation (CV) or 0.6. Where there are 10 or more individual WET tests, the multiplying factor taken from Table F6–1 shall be based on a CV calculated as the standard deviation of the acute toxicity values found in the WET tests divided by the arithmetic mean of those toxicity values.

3. The WET of an effluent is or may be discharged at a level that will cause, have the reasonable potential to cause, or contribute to an excursion above any numeric chronic WET criterion or numeric interpretation of a narrative criterion within a State's or Tribe's water quality standards, when effluent-specific information demonstrates that:

$(TU_c \text{ effluent})\ (B)\ (\text{effluent flow}/Qad+\text{effluent flow}))>CC$

Where TU_c effluent is the maximum measured chronic toxicity value of 100 percent effluent determined in accordance with section D.1.b. of this procedure, B is the multiplying factor taken from Table F6–1 of this procedure, effluent flow is the same effluent flow used to calculate the preliminary WLAs for individual pollutants to meet the chronic criteria and values for those pollutants, CC is the numeric chronic WET criterion or numeric interpretation of a narrative criterion established pursuant to section A.2 of this procedure and expressed in TU_c, and Qad is the amount of the receiving water available for dilution calculated using: (i) the design flow(s) for tributaries and connecting channels specified in procedure 3.E.1.a of appendix F, and where appropriate procedure 3.E.1.e of appendix F, and in accordance with the provisions of procedure 3.E.5 for chronic mixing zones, or (ii) procedures 3.D.1 and 3.D.4 for discharges to the OWGLs. Where there are less than 10 individual WET tests, the multiplying factor taken from Table F6–1 of this procedure shall be based on a CV of 0.6. Where there are 10 more individual WET tests, the multiplying factor taken from Table F6–1 of this procedure shall be based on a CV calculated as the standard deviation of the WET tests divided by the arithmetic mean of the WET tests.

TABLE F6–1.—REASONABLE POTENTIAL MULTIPLYING FACTORS: 95% CONFIDENCE LEVEL AND 95% PROBABILITY BASIS

Number of Samples	Coefficient of variation																			
	0.1	0.2	0.3	0.4	0.5	0.6	0.7	0.8	0.9	1.0	1.1	1.2	1.3	1.4	1.5	1.6	1.7	1.8	1.9	2.0
1	1.4	1.9	2.6	3.6	4.7	6.2	8.0	10.1	12.6	15.5	18.7	22.3	26.4	30.8	35.6	40.7	46.2	52.1	58.4	64.9
2	1.3	1.6	2.0	2.5	3.1	3.8	4.6	5.4	6.4	7.4	8.5	9.7	10.9	12.2	13.6	15.0	16.4	17.9	19.5	21.1
3	1.2	1.5	1.8	2.1	2.5	3.0	3.5	4.0	4.6	5.2	5.8	6.5	7.2	7.9	8.6	9.3	10.0	10.8	11.5	12.3
4	1.2	1.4	1.7	1.9	2.2	2.6	2.9	3.3	3.7	4.2	4.6	5.0	5.5	6.0	6.4	6.9	7.4	7.8	8.3	8.8
5	1.2	1.4	1.6	1.8	2.1	2.3	2.6	2.9	3.2	3.6	3.9	4.2	4.5	4.9	5.2	5.6	5.9	6.2	6.6	6.9
6	1.1	1.3	1.5	1.7	1.9	2.1	2.4	2.6	2.9	3.1	3.4	3.7	3.9	4.2	4.5	4.7	5.0	5.2	5.5	5.7
7	1.1	1.3	1.4	1.6	1.8	2.0	2.2	2.4	2.6	2.8	3.1	3.3	3.5	3.7	3.9	4.1	4.3	4.5	4.7	4.9
8	1.1	1.3	1.4	1.6	1.7	1.9	2.1	2.3	2.4	2.6	2.8	3.0	3.2	3.3	3.5	3.7	3.9	4.0	4.2	4.3
9	1.1	1.2	1.4	1.5	1.7	1.8	2.0	2.1	2.3	2.4	2.6	2.8	2.9	3.1	3.2	3.4	3.5	3.6	3.8	3.9
10	1.1	1.2	1.3	1.5	1.6	1.7	1.9	2.0	2.2	2.3	2.4	2.6	2.7	2.8	3.0	3.1	3.2	3.3	3.4	3.6
11	1.1	1.2	1.3	1.4	1.6	1.7	1.8	1.9	2.1	2.2	2.3	2.4	2.5	2.7	2.8	2.9	3.0	3.1	3.2	3.3
12	1.1	1.2	1.3	1.4	1.5	1.6	1.7	1.9	2.0	2.1	2.2	2.3	2.4	2.5	2.6	2.7	2.8	2.9	3.0	3.0
13	1.1	1.2	1.3	1.4	1.5	1.6	1.7	1.8	1.9	2.0	2.1	2.2	2.3	2.4	2.5	2.5	2.6	2.7	2.8	2.9
14	1.1	1.2	1.3	1.4	1.4	1.5	1.6	1.7	1.8	1.9	2.0	2.1	2.2	2.3	2.3	2.4	2.5	2.6	2.6	2.7
15	1.1	1.2	1.2	1.3	1.4	1.5	1.6	1.7	1.8	1.8	1.9	2.0	2.1	2.2	2.2	2.3	2.4	2.4	2.5	2.5
16	1.1	1.1	1.2	1.3	1.4	1.5	1.6	1.6	1.7	1.8	1.9	1.9	2.0	2.1	2.1	2.2	2.3	2.3	2.4	2.4
17	1.1	1.1	1.2	1.3	1.4	1.4	1.5	1.6	1.7	1.7	1.8	1.9	1.9	2.0	2.0	2.1	2.2	2.2	2.3	2.3
18	1.1	1.1	1.2	1.3	1.3	1.4	1.5	1.6	1.6	1.7	1.7	1.8	1.9	1.9	2.0	2.0	2.1	2.1	2.2	2.2
19	1.1	1.1	1.2	1.3	1.3	1.4	1.5	1.5	1.6	1.6	1.7	1.8	1.8	1.9	1.9	2.0	2.0	2.0	2.1	2.1
20	1.1	1.1	1.2	1.2	1.3	1.4	1.4	1.5	1.5	1.6	1.6	1.7	1.7	1.8	1.8	1.9	1.9	2.0	2.0	2.0
30	1.0	1.1	1.1	1.1	1.2	1.2	1.2	1.3	1.3	1.3	1.3	1.4	1.4	1.4	1.4	1.5	1.5	1.5	1.5	1.5
40	1.0	1.0	1.1	1.1	1.1	1.1	1.1	1.1	1.2	1.2	1.2	1.2	1.2	1.2	1.2	1.2	1.2	1.2	1.3	1.3
50	1.0	1.0	1.0	1.0	1.0	1.0	1.0	1.1	1.1	1.1	1.1	1.1	1.1	1.1	1.1	1.1	1.1	1.1	1.1	1.1
60	1.0	1.0	1.0	1.0	1.0	1.0	1.0	1.0	1.0	1.0	1.0	1.0	1.0	1.0	1.0	1.0	1.0	1.0	1.0	1.0
70	1.0	1.0	1.0	1.0	1.0	0.9	0.9	0.9	0.9	0.9	0.9	0.9	0.9	0.9	0.9	0.9	0.9	0.9	0.9	0.9
80	1.0	1.0	1.0	0.9	0.9	0.9	0.9	0.9	0.9	0.9	0.9	0.9	0.9	0.9	0.8	0.8	0.8	0.8	0.8	0.8
90	1.0	1.0	0.9	0.9	0.9	0.9	0.9	0.9	0.9	0.8	0.8	0.8	0.8	0.8	0.8	0.8	0.8	0.8	0.8	0.8
100	1.0	1.0	0.9	0.9	0.9	0.9	0.9	0.8	0.8	0.8	0.8	0.8	0.8	0.8	0.8	0.8	0.8	0.7	0.7	0.7

Procedure 7: Loading Limits

The Great Lakes States and Tribes shall adopt provisions consistent with (as protective as) this procedure.

Whenever a water quality-based effluent limitation (WQBEL) is developed, the WQBEL shall be expressed as both a concentration value and a corresponding mass loading rate.

A. Both mass and concentration limits shall be based on the same permit averaging periods such as daily, weekly, or monthly averages, or in other appropriate permit averaging periods.

B. The mass loading rates shall be calculated using effluent flow rates that are consistent with those used in establishing the WQBELs expressed in concentration.

Procedure 8: Water Quality-based Effluent Limitations Below the Quantification Level

The Great Lakes States and Tribes shall adopt provisions consistent with (as protective as) this procedure.

When a water quality-based effluent limitation (WQBEL) for a pollutant is calculated to be less than the quantification level:

A. *Permit Limits.* The permitting authority shall designate as the limit in the NPDES permit the WQBEL exactly as calculated.

B. *Analytical Method and Quantification Level.*

1. The permitting authority shall specify in the permit the most sensitive, applicable, analytical method, specified in or approved under 40 CFR part 136, or other appropriate method if one is not available under 40 CFR part 136, to be used to monitor for the presence and amount in an effluent of the pollutant for which the WQBEL is established; and shall specify in accordance with section B.2 of this procedure, the quantification level that can be achieved by use of the specified analytical method.

2. The quantification level shall be the minimum level (ML) specified in or approved under 40 CFR part 136 for the method for that pollutant. If no such ML exists, or if the method is not specified or approved under 40 CFR part 136, the quantification level shall be the lowest quantifiable level practicable. The permitting authority may specify a higher quantification level if the permittee demonstrates that a higher quantification level is appropriate because of effluent-specific matrix interference.

3. The permit shall state that, for the purpose of compliance assessment, the analytical method specified in the permit shall be used to monitor the amount of pollutant in an effluent down to the quantification level, provided that the analyst has complied with the specified quality assurance/quality control procedures in the relevant method.

4. The permitting authority shall use applicable State and Tribal procedures to average and account for monitoring data. The permitting authority may specify in the permit the value to be used to interpret sample values below the quantification level.

C. *Special Conditions.* The permit shall contain a reopener clause authorizing modification or revocation and reissuance of the permit if new information generated as a result of special conditions included in the permit indicates that presence of the pollutant in the discharge at levels above the WQBEL. Special conditions that may be included in the permit include, but are not limited to, fish tissue sampling, whole effluent toxicity (WET) tests, limits and/or monitoring requirements on internal waste streams, and monitoring for surrogate parameters. Data generated as a result of special conditions can be used to reopen the permit to establish more stringent effluent limits or conditions, if necessary.

D. *Pollutant Minimization Program.* The permitting authority shall include a condition in the permit requiring the permittee to develop and conduct a pollutant minimization program for each pollutant with a WQBEL below the quantification level. The goal of the pollutant minimization program shall be to reduce all potential sources of the pollutant to maintain the effluent at or below the WQBEL. In addition, States and Tribes may consider cost-effectiveness when establishing the requirements of a PMP. The pollutant minimization program shall include, but is not limited to, the following:

1. An annual review and semi-annual monitoring of potential sources of the pollutant, which may include fish tissue monitoring and other bio-uptake sampling;

2. Quarterly monitoring for the pollutant in the influent to the wastewater treatment system;

3. Submittal of a control strategy designed to proceed toward the goal of maintaining all sources of the pollutant to the wastewater collection system below the WQBEL;

4. When the sources of the pollutant are discovered, appropriate cost-effective control

measures shall be implemented, consistent with the control strategy; and

5. An annual status report that shall be sent to the permitting authority including:

a. All minimization program monitoring results for the previous year;

b. A list of potential sources of the pollutant; and

c. A summary of all action taken to reduce or eliminate the identified sources of the pollutant.

6. Any information generated as a result of procedure 8.D can be used to support a request for subsequent permit modifications, including revisions to (e.g., more or less frequent monitoring), or removal of the requirements of procedure 8.D, consistent with 40 CFR 122.44, 122.62 and 122.63.

Procedure 9: Compliance Schedules

The Great Lakes States and Tribes shall adopt provisions consistent with (as protective as) procedure 9 of appendix F of part 132.

A. *Limitations for New Great Lakes Dischargers.* When a permit issued on or after March 23, 1997 to a new Great Lakes discharger (defined in Part 132.2) contains a water quality-based effluent limitation (WQBEL), the permittee shall comply with such a limitation upon the commencement of the discharge.

B. *Limitations for Existing Great Lakes Dischargers.*

1. Any existing permit that is reissued or modified on or after March 23, 1997 to contain a new or more restrictive WQBEL may allow a reasonable period of time, up to five years from the date of permit issuance or modification, for the permittee to comply with that limit, provided that the Tier I criterion or whole effluent toxicity (WET) criterion was adopted (or, in the case of a narrative criterion, Tier II value, or Tier I criterion derived pursuant to the methodology in appendix A of part 132, was newly derived) after July 1, 1977.

2. When the compliance schedule established under paragraph 1 goes beyond the term of the permit, an interim permit limit effective upon the expiration date shall be included in the permit and addressed in the permit's fact sheet or statement of basis. The administrative record for the permit shall reflect the final limit and its compliance date.

3. If a permit establishes a schedule of compliance under paragraph 1 which exceeds one year from the date of permit issuance or modification, the schedule shall set forth interim requirements and dates for their achievement. The time between such interim dates may not exceed one year. If the time necessary for completion of any interim requirement is more than one year and is not readily divisible into stages for completion, the permit shall require, at a minimum, specified dates for annual submission of progress reports on the status of any interim requirements.

C. *Delayed Effectiveness of Tier II Limitations for Existing Great Lakes Discharges.*

1. Whenever a limit (calculated in accordance with Procedure 3) based upon a Tier II value is included in a reissued or modified permit for an existing Great Lakes discharger, the permit may provide a reasonable period of time, up to two years, in which to provide additional studies necessary to develop a Tier I criterion or to modify the Tier II value. In such cases, the permit shall require compliance with the Tier II limitation within a reasonable period of time, no later than five years after permit issuance or modification, and contain a reopener clause.

2. The reopener clause shall authorize permit modifications if specified studies have been completed by the permittee or provided by a third-party during the time allowed to conduct the specified studies, and the permittee or a third-party demonstrates, through such studies, that a revised limit is appropriate. Such a revised limit shall be incorporated through a permit modification and a reasonable time period, up to five years, shall be allowed for compliance. If incorporated prior to the compliance date of the original Tier II limitation, any such revised limit shall not be considered less-stringent for purposes of the anti-backsliding provisions of section 402(o) of the Clean Water Act.

3. If the specified studies have been completed and do not demonstrate that a revised limit is appropriate, the permitting authority may provide a reasonable additional period of time, not to exceed five years with which to achieve compliance with the original effluent limitation.

4. Where a permit is modified to include new or more stringent limitations, on a date within five years of the permit expiration date, such compliance schedules may extend beyond the term of a permit consistent with section B.2 of this procedure.

5. If future studies (other than those conducted under paragraphs 1, 2, or 3 above) result in a Tier II value being changed to a less stringent Tier II value or Tier I criterion, after the effective date of a Tier II-based limit, the existing Tier II-based limit may be revised to be less stringent if:

(a) It complies with sections 402(o) (2) and (3) of the CWA; or,

(b) In non-attainment waters, where the existing Tier II limit was based on procedure 3, the cumulative effect of revised effluent limitation based on procedure 3 of this appendix will assure compliance with water quality standards; or,

(c) In attained waters, the revised effluent limitation complies with the State or Tribes' antidegradation policy and procedures.

[FR Doc. 95–6671 Filed 3–22–95; 8:45 am]

BILLING CODE 6560–50–P

federal register

Thursday
March 23, 1995

Part IV

Department of Education

Privacy Act of 1974; Computer Matching Program; Notice

DEPARTMENT OF EDUCATION

Privacy Act of 1974; Computer Matching Program; Notice

AGENCY: Department of Education.

ACTION: Notice—Computer matching between the Department of Education and the Immigration and Naturalization Service (INS), Department of Justice.

SUMMARY: Pursuant to the Computer Matching and Privacy Protection Act of 1988, Pub. L. 100–503, and the Office of Management and Budget (OMB) Guidelines on the Conduct of Matching Programs, notice is hereby given of the computer matching program between the Department of Education (ED) (the recipient agency), and the Immigration and Naturalization Service (INS), Department of Justice (the source agency).

Notice of the matching program was originally published in the **Federal Register** on September 24, 1992 (57 FR 44209); the program became effective on October 26, 1992. Duration was 18 months plus a one-year extension permitted by the Privacy Act of 1974, as amended by the Computer Matching and Privacy Protection Act of 1988 (5 U.S.C. 552a(o)(2)(D)). The one-year extension will expire on April 26, 1995. The following notice represents the approval of a new agreement by the Department of Justice and Department of Education Data Integrity Boards to continue the matching program (on the effective date as indicated below).

In accordance with the Privacy Act of 1974 (5 U.S.C. 552a), as amended by the Computer Matching and Privacy Protection Act of 1988 (Pub. L. 100–503), and the Office of Management and Budget (OMB) Final Guidance on Interpreting the Provisions of Pub. L. 100–503, Computer Matching and Privacy Act of 1988 (54 FR 25818, June 19, 1989), and OMB Bulletin 89–22, the following information is provided:

1. Name of Participating Agencies

The Department of Education (ED) and the Department of Justice (DOJ).

2. Purpose of the Match

The matching program entitled ''Systematic Alien Verification for Entitlement (SAVE) INS/ED'' will permit ED to confirm the immigration status of alien applicants for, or recipients of, assistance as authorized by Title IV, section 484(a)(5), of the Higher Education Act of 1965, (HEA), as amended. The Title IV programs include: The Federal Pell Grant, Federal Supplemental Educational Opportunity Grant, Federal Work-Study, State Student Incentive Grant, Federal Family Education Loan, William D. Ford Direct Loan and the Federal Perkins Loan Programs.

3. Authority for Conducting the Matching Program

The information contained in the INS data base is referred to as the Alien Status Verification Index (ASVI), and is authorized under the Immigration Reform and Control Act of 1986 (IRCA), Pub. L. 99–603. ED seeks access to this data base under the Higher Education Act of 1965, as amended (section 484(g)). The INS is authorized to confirm immigration status under the authority of section 103 of the Immigration and Nationality Act.

4. Categories of Records and Individuals Covered

The records to be used in the match and the roles of the matching participants are described as follows:

Through the use of user identification codes and passwords, authorized persons from ED will transmit electronically to INS data from its Privacy Act system of records entitled, ''Federal Student Aid Application File (18–40–0014).'' The data will include the alien registration number and date of birth of the alien applicant for, or recipient of, Title IV assistance. This action will initiate a search for corresponding data elements in an INS Privacy Act system of records entitled ''Alien Status Verification Index (JUSTICE/INS–009).'' Where there is a match of records, the system will provide to ED the immigration status code and employment eligibility code of the alien applicant or recipient. In accordance with 5 U.S.C. 552a(p), ED will verify any adverse finding (independently or through the alien applicant or recipient) and provide the alien applicant or recipient with 30 days notice and opportunity to contest such finding.

5. Effective Dates of the Matching Program

The matching program will become effective 40 days after a copy of the agreement, as approved by the Data Integrity Board of each agency, is sent to Congress and the Office of Management and Budget, or 30 days after publication of this notice in the **Federal Register**, whichever date is later. The matching program will continue for 18 months after the effective date and may be extended for an additional 12 months, if the conditions specified in 5 U.S.C. 552a(o)(2)(D) have been met.

6. Address for Receipt of Public Comments or Inquiries

Claude Denton, Acting Chief, Student Eligibility and Verification Section, Policy Development Division, U.S. Department of Education, 600 Independence Avenue, SW., (Room 3045, ROB–3), Washington, DC 20202, Telephone: (202) 708–7888. Individuals who use a telecommunications device for the deaf (TTD) may call the Federal Information Relay Service (FIRS) at 1–800–877–8339 between 8 a.m. and 8 p.m., Eastern time, Monday through Friday.

Dated: March 15, 1995.

David A. Longanecker,

Asistant Secretary for Postsecondary Education.

[FR Doc. 95–7093 Filed 3–22–95; 8:45 am]

BILLING CODE 4000–01–M

federal register

Thursday
March 23, 1995

Part V

Department of the Treasury

Fiscal Service

31 CFR Part 351

Offering of United States Savings Bonds, Series EE; Final Rule

DEPARTMENT OF THE TREASURY

Fiscal Service

31 CFR Part 351

[Department of the Treasury Circular, Public Debt Series No. 1–80]

Offering of United States Savings Bonds, Series EE

AGENCY: Bureau of the Public Debt, Fiscal Service, Department of the Treasury.

ACTION: Final rule.

SUMMARY: This Final Rule amends the offering circular for Series EE United States Savings Bonds to reflect rate changes for Series EE savings bonds issued on or after May 1, 1995, and the repeal of the statutory minimum 4 percent investment yield guarantee. The purpose of these changes is to provide for greater flexibility in determining and calculating the interest rates and redemption values for Series EE savings bonds.

EFFECTIVE DATE: May 1, 1995.

FOR FURTHER INFORMATION CONTACT: Wallace Earnest, Director, Division of Staff Services, Savings Bond Operations, Bureau of the Public Debt, Parkersburg, West Virginia 26106–1328 (304) 480–6319, or Edward Gronseth, Deputy Chief Counsel, or Bob Riffle, Paralegal Specialist, Office of the Chief Counsel, Bureau of the Public Debt (304) 480–5192.

SUPPLEMENTARY INFORMATION:

I. Background

On March 15, 1976, the savings bonds statute, the Second Liberty Bond Act (31 U.S.C. 757c(b), later codified at 31 U.S.C. 3105), was amended to require that the investment yield on Series E savings bonds would not be less than 4 percent per annum, compounded semiannually, from the first day of the month after issue date to the last day of the month before the redemption date (31 U.S.C. 3105(b)(2)). The purpose of this amendment was to provide savings bond owners with a guaranteed minimum rate of return no matter when they redeemed their bonds. In 1982, the Treasury amended the offering circular for Series EE bonds held at least 5 years. The returns were linked to yields for 5-year Treasury securities. A guaranteed minimum rate was still in effect, but it declined over the years from 7.5 percent to 6 percent to the statutory 4 percent floor.

On December 8, 1994, the guaranteed minimum 4 percent was repealed (Pub.l. 103–465). This statutory change provided the opportunity for Treasury to consider a fresh approach to determining rates for new savings bonds and better achieve the goals of the Savings Bond Program.

II. Summary of Amendments

Section 351.0 is amended to change the effective date of the offering circular to May 1, 1995.

Paragraphs (e) through (i) of section 351.2, are amended to ensure that the provisions of those paragraphs do not conflict with or contradict other changes to Section 351.2, as described below.

A new paragraph (j) is added to Section 351.2 to describe changes in the terms and conditions for Series EE bonds offered for sale on and after May 1, 1995. The following paragraphs describe the terms and conditions for such bonds:

Market Yields. Treasury uses market bid yields for bills, notes, and bonds to create a yield curve based on the most actively traded Treasury securities. This curve relates the yield on a security to its time to maturity. Yields at particular points on the curve are referred to as ''constant maturity yields'' and are determined by the U.S. Treasury from this daily yield curve. The Board of Governors of the Federal Reserve System currently publishes daily Treasury constant maturity yields in the Statistical Release H.15, ''Selected Interest Rates''. The 6-month and 5-year Treasury securities rates described below are derived from these yield curves. (Note: This method of determining market rates has been used since the inception of the market-based program in 1982).

Short-Term Savings Bond Rate. No less frequently than on each May 1 and November 1, Treasury announces a short-term savings bond rate. To determine this rate, Treasury compiles 6-month Treasury securities rates as of the close of business for each day of the previous three months and calculates the monthly average for each month, rounding each monthly average to the nearest one-hundredth of one percent. The short-term savings bond rate is then determined by taking 85 percent of the 3-month average and rounding the result to the nearest one-hundredth of one percent. If the regularly scheduled date for the announcement (for example, May 1) is a day when the Treasury is not open for business, then the announcement is made on the next business day and is effective as of the first day of that month. For bonds entitled to interest accruals at the short-term savings bond rate, that rate applies to the bond's first full semiannual interest accrual period following each announcement of the rate.

Long-Term Savings Bond Rate. No less frequently than on each May 1 and November 1, Treasury announces a long term-savings bond rate. To determine this rate, Treasury compiles 5-year Treasury securities rates as of the close of business for each day of the previous six months and calculates the monthly average for each month, rounding each monthly average to the nearest one-hundredth of one percent. The long-term savings bond rate is then determined by taking 85 percent of the 6-month average and rounding the result to the nearest one-hundredth of one percent. If the regularly scheduled date for the announcement (for example, May 1) is a day when the Treasury is not open for business, then the announcement is made on the next business day and is effective as of the first day of that month. For bonds entitled to interest accruals at the long-term savings bond rate, that rate applies to the bond's first full semiannual interest accrual period following each announcement of the rate.

Base Denomination. All redemption value calculations are performed on a hypothetical denomination of $25, having a value at the beginning of the first earning period equal to an issue price of $12.50. Redemption values for bonds of greater denominations are in direct proportion according to the ratio of denominations. *For example,* if the value of a hypothetical $25 denomination is $26.80—*i.e.,* $12.50 issue price plus $14.30 accrued interest—the value of a $50 bond is $26.80 × (50 ÷ 25), or $53.60.

Semiannual Earning Periods and Accrual Dates. Bonds bearing May 1, 1995, and later issue dates, earn interest during each successive 6-month period from date of issue to final maturity. Interest accrues, immediately following each earning period, on each semiannual anniversary of the date of issue, including the date of final maturity.

Original Maturity. Original maturity occurs at 17 years after date of issue. The redemption value of a bond at original maturity shall not be less than the face amount (denomination) of the bond.

Final Maturity. Final maturity occurs at 30 years after the date of issue. Bonds cease to earn interest at final maturity.

Interest Rate and Redemption Values for Bonds Through Original Maturity. Short-term saving bond rates are used to determine the increase in redemption values for each semiannual accrual date occurring on or before 5 years from the date of issue. For a bond outstanding

more than five years through original maturity, long-term savings bond rates are used to determine the increase in redemption values for each semiannual accrual date occurring after 5 years from the date of issue.

Interest Rate and Redemption Values for Bonds During An Extended Maturity Period. From 17 years after date of issue to the final maturity date, the bond continues to earn interest and ceases to earn interest at final maturity.

Outstanding Savings Bonds. No changes are made to the terms and conditions for outstanding bonds or to the regulations governing the offering of Series E, H and HH savings bonds in 31 CFR parts 316, 332, and 352, respectively, and savings notes in 31 CFR part 342, as a result of the repeal of paragraph (b)(2) of 31 U.S.C. 3105 and the amendment to 31 CFR part 351.

Procedural Requirements

It has been determined that this Final Rule is not a significant regulatory action as defined in Executive Order 12866. Therefore, an assessment of anticipated benefits, costs and regulatory alternatives is not required.

This rule relates to matters of public contract, as well as the borrowing power and fiscal authority of the United States. The notice and public procedures requirements of the Administrative Procedure Act are inapplicable, pursuant to 5 U.S.C. 553(a)(2). As no notice of proposed rulemaking is required, the provisions of the Regulatory Flexibility Act (5 U.S.C. 601, *et seq.*) do not apply.

There are no collections of information required by this Final Rule, and, therefore, no approval pursuant to the Paperwork Reduction Act, is required.

List of Subjects in 31 CFR Part 351

Bonds, Government Securities.

Dated: March 10, 1995.

Gerald Murphy,

Fiscal Assistant Secretary.

For the reasons set forth in the preamble, Part 351 of Title 31 of the Code of Federal Regulations is amended as follows:

PART 351—OFFERING OF UNITED STATES SAVINGS BONDS, SERIES EE

1. The authority citation for part 351 is revised to read as follows:

Authority: 5 U.S.C. 301; 12 U.S.C. 391; 31 U.S.C. 3105.

2. Section 351.0 is amended, in the second sentence, by removing ''March 1, 1993'', and adding in its place ''May 1, 1995.''

3. Section 351.2(c) is amended as follows:

A. Adding at the end of the heading ''for bonds issued prior to May 1, 1995'';

B. In the second sentence, after ''Series EE bonds'', by adding ''issued prior to May 1, 1995,'';

C. In the table, in the first column, last line, by revising ''Mar. 1993, and thereafter'' to read ''Mar. 1993–Apr. 1995''; and

D. In the table, in the second column, last line, by revising ''Mar. 2011, and thereafter'' to read ''Mar. 2011–Apr. 2013''.

4. Section 351.2(e) is amended as follows:

A. In the paragraph heading, by revising the words ''November 1, 1982, or thereafter'' to read ''November 1, 1982 through April 1, 1995.'';

B. The introductory text of paragraph (e) is revised to read as follows:

* * * * *

(e)* * * The investment yield of a Series EE bond bearing issue dates of November 1, 1982, through April 1, 1995, from its issue date to each interest accrual date occurring less than 5 years after issue, will be as shown in Tables 1, 2, and 3 in the appendix to this part.

* * * * *

C. Removing ''or thereafter'' at the end of the first sentence of paragraph (e)(1) and adding in its place ''through April 1, 1995'';

D. In paragraph (e)(2)(iii), in the first sentence, after the words ''May 1, 1989,'' by removing ''or thereafter'' and adding in its place ''through April 1, 1995''.

5. Section 351.2(f)(2) is amended by removing ''November 2, 1982'' and adding in its place ''November 1, 1982''.

6. Section 351.2(g) is amended as follows:

A. In the paragraph heading, after ''Extended maturity periods,'' by adding ''for bonds bearing issue dates prior to May 1, 1995'';

B. In the first sentence, by removing ''of 12 years or less'';

C. In the heading of paragraph (g)(2), after ''Extensions granted,'' adding ''for bonds bearing issue dates prior to May 1, 1995''; and

D. By revising the tables in paragraph (g)(2) to read as follows:

* * * * *

Issues dates—1st day of:	Original terms	Original maturity dates-day of:	Final maturity dates—1st day of:
Jan. 1980–Oct. 1980	11 years	Jan. 1991–Oct. 1991	Jan. 2010–Oct. 2010.
Nov. 1980–Apr. 1981	9 years	Nov. 1989–Apr. 1990	Nov. 2010–Apr. 2011.
May 1981–Oct. 1982	8 years	May 1989–Oct. 1990	May 2011–Oct. 2012.
Nov. 1982–Oct. 1986	10 years	Nov. 1992–Oct. 1996	Nov. 2012–Oct. 2016.
Nov. 1986–Feb. 1993	12 years	Nov. 1998–Feb. 2005	Nov. 2016–Feb. 2023.
Mar. 1993–Apr. 1995	18 years	Mar. 2011–Apr. 2013	Mar. 2023–Apr. 2025

Issues dates—1st day of:	1st extended maturity dates—1st day of:*	Years to final maturity	Final maturity dates—1st day of:
Jan. 1980–Oct. 1980	Jan. 2001–Oct. 2001	9 years	Jan. 2010–Oct. 2010.
Nov. 1980–Apr. 1981	Nov. 1999–Apr. 2000	11 years	Nov. 2010–Apr. 2011.
May 1981–Oct. 1982	May 1999–Oct. 2000	12 years	May 2011–Oct. 2012.
Nov. 1982–Oct. 1986	Nov. 2002–Oct. 2006	10 years	Nov. 2012–Oct. 2016.
Nov. 1986–Feb. 1993	Nov. 2008–Feb. 2015	8 years	Nov. 2016–Feb. 2023.
Mar. 1993–Apr. 1995	Mar. 2021–Apr. 2023	2 years	Mar. 2023–Apr. 2025

* At 10 years after original maturity.

* * * * *

E. In the heading of paragraph (g)(3), by adding ''for bonds bearing issue dates prior to May 1, 1995'' after ''extended maturity period''.

7. Paragraph 351.2(h) is amended as follows:

A. In the heading, by adding ''for bonds issued prior to May 1, 1995'' after ''Accrual and payment of interest'';

B. In the fifth sentence, after ''For bonds with issue dates'', by removing ''on and after'' and adding in their place the word ''of''; and

C. In the fifth sentence, after ''March 1, 1993,'', by adding ''through April 1, 1995,''.

8. Paragraph 351.2(i) is amended as follows:

A. In the heading, by adding ''for bonds issued prior to May 1, 1995'' after ''Tables of redemption values''; and

B. In the first sentence, after ''November 1, 1982,'', by removing ''and thereafter'', and adding in its place ''through April 1, 1995''.

9. A new paragraph (j) is added to Section 351.2 to read as follows:

* * * * *

(j) *Market-based interest rate and redemption values—bonds bearing issue dates of May 1, 1995, or thereafter.* (1) The following definitions apply for determining the interest rates and redemption values for bonds bearing issue dates of May 1, 1995, and thereafter:

(i) *Market yields.* Treasury uses market bid yields for bills, notes, and bonds to create a yield curve based on the most actively traded Treasury securities. This curve relates the yield on a security to its time to maturity. Yields at particular points on the curve are referred to as ''constant maturity yields'' and are determined by the Treasury from this daily yield curve. The 6-month and 5-year Treasury securities rates described below are derived from these yield curves.

(ii) *Short-term savings bond rate.* No less frequently than on each May 1 and November 1, Treasury announces a short-term savings bond rate. To determine this rate, Treasury compiles 6-month Treasury securities rates as of the close of business for each day of the previous three months and calculates the monthly average for each month, rounding each monthly average to the nearest one-hundredth of one percent. The short-term savings bond rate is then determined by taking 85 percent of the three-month average and rounding the result to the nearest one-hundredth of one percent. If the regularly scheduled date for the announcement (for example, May 1) is a day when the Treasury is not open for business, then the announcement is made on the next business day and is effective as of the first day of that month. For bonds entitled to interest accruals at the short-term savings bond rate, that rate applies to the bond's first full semiannual interest accrual period following each announcement of the rate.

(iii) *Long-term savings bond rate.* No less frequently than on each May 1 and November 1, Treasury announces a long-term savings bond rate. To determine this rate, Treasury compiles 5-year Treasury securities rates as of the close of business for each day of the previous six months and calculates the monthly average for each month, rounding each monthly average to the nearest one-hundredth of one percent. The long-term savings bond rate is then determined by taking 85 percent of the 6-month average and rounding the result to the nearest one-hundredth of one percent. If the regularly scheduled date for the announcement (for example, May 1) is a day when the Treasury is not open for business, then the announcement is made on the next business day and is effective as of the first day of that month. For bonds entitled to interest accruals at the long-term savings bond rate, that rate applies to the bond's first full semiannual interest accrual period following each announcement of the rate.

(iv) *Base denomination.* All redemption value calculations are performed on a hypothetical denomination of $25 having a value at the beginning of the first earning period equal to an issue price of $12.50. Redemption values for bonds of greater denominations are in direct proportion according to the ratio of denominations. *For example,* if the value of a hypothetical $25 denomination is $26.80—*i.e.*, $12.50 issue price plus $14.30 accrued interest—on the same redemption date, the value of a $50 bond bearing the same issue date is $26.80 × (50 ÷ 25) or $53.60.

(v) *Issue date.* The issue date of a Series EE bond is the first day of the month in which payment of the issue price is received by an authorized issuing agent.

(vi) *Semiannual earning periods and accrual dates.* Bonds bearing issue dates of May 1, 1995, and thereafter earn interest during each successive six month period from date of issue to final maturity. Interest accrues, immediately following each earning period, on each semiannual anniversary of the date of issue, including the date of final maturity.

(vii) *Original maturity.* Bonds reach original maturity at 17 years after date of issue.

(viii) *Final maturity.* Bonds reach final maturity at 30 years after date of issue. A bond ceases to earn interest at final maturity.

(2) *Interest rates and redemption values for bonds held 5 years or less.* The interest rate for a Series EE bond bearing an issue date of May 1, 1995, or thereafter, for semiannual earning periods during the first 5 years from date of issue, is the short-term savings bond rate determined as defined in paragraph (j)(1)(ii) of this section. Redemption values for semiannual accrual dates occurring on or before 5 years from date of issue are calculated in accordance with paragraph (j)(5) of this section.

(3) *Interest rates and redemption values for bonds held 5 years and 6 months and longer.* The interest rate for a Series EE bond bearing an issue date of May 1, 1995, or thereafter, for semiannual earning periods beginning 5 years from date of issue through original maturity, is the long-term savings bond rate determined as defined in paragraph (j)(1)(iii) of this section. Redemption values for semiannual accrual dates occurring after 5 years from date of issue, through original maturity, are calculated in accordance with paragraph (j)(5) of this section, except that the redemption value at the date of original maturity, as provided in paragraph (j)(1)(vii) of this section, shall not be less than the denomination (face amount or face value).

(4) *Interest rates and redemption values for bonds during an extended maturity period.* From 17 years after date of issue to the final maturity date (the ''extended maturity period'') the bond will be subject to the terms and conditions in effect when it is issued, and will continue to earn interest as described in paragraph (j)(3) of this section, unless the terms and conditions applicable to an extended maturity period are expressly amended prior to the beginning of such period.

(5) *Redemption value calculations.* Interest on a bond accrues and becomes part of the redemption value which is paid when the bond is cashed. The redemption value of a bond on the accrual date immediately following each semiannual earning period is determined as follows:

(i) The applicable long-term or short-term savings bond rate for the semiannual earning period is converted to decimal form by dividing by 100, and is adjusted to a semiannual rate by dividing by 2.

(ii) Using redemption values for the base denomination, as defined in paragraph (j)(1)(iv) of this section, this rate is then multiplied by the redemption value of the bond at the beginning of the semiannual earning period.

(iii) The resulting interest amount, rounded to the nearest cent, is added to the redemption value of the bond at the beginning of the earning period to produce the redemption value at the next semiannual accrual date. The

redemption value of a bond remains constant between accrual dates.

(6) *The Secretary's determination.* The determination by the Secretary of the Treasury, or his delegate, of the market yields, and the long-term and short-term savings bond rates, shall be final and conclusive.

(7) *Tables of redemption values.* Tables of redemption value are made available by the Bureau of the Public Debt, Parkersburg, West Virginia 26106–1328, prior to the periods during which the redemption values are payable.

[FR Doc. 95–7134 Filed 3–21–95; 8:45 am]

BILLING CODE 4810–39–W

federal register

Thursday
March 23, 1995

Part VI

Department of Housing and Urban Development

Office of the Assistant Secretary for Public and Indian Housing

Public Housing Apprenticeship Demonstration Program in the Construction Trades and Public Housing Operations; Notice

DEPARTMENT OF HOUSING AND URBAN DEVELOPMENT

Office of the Assistant Secretary for Public and Indian Housing

[Docket No. N–95–3885; FR–3884–N–01]

Notice of Public Housing Apprenticeship Demonstration Program in the Construction Trades and Public Housing Operations

AGENCY: Office of the Assistant Secretary for Public and Indian Housing.

ACTION: Notice of demonstration program.

SUMMARY: This Notice announces the Department's intention to award $9 million to HOPE VI eligible housing authorities who have partnered with the Laborers International Union of North America (LIUNA); the United Brotherhood of Carpenters and the International Brotherhood of Painters; and the American Federation of State, County and Municipal Employees (AFSCME) to enhance the long-term welfare of youth living in public housing through Apprenticeship Demonstration Programs. The Department will enter into Memoranda of Agreement with the above referenced organizations for the same purpose—to enhance the long-term welfare of youth living in public housing.

The Public Housing Apprenticeship Demonstration Program in the Construction Trades and Public Housing Operations will provide job training and ensure bonafide apprenticeship and employment opportunities in the construction trades and public housing operations that will lead to self-sufficiency for public housing youth. This notice provides guidelines for the use of these funds and invites comments on the demonstration.

DATES: Proposal Due Date: Applicant proposals will be due to the Department May 8, 1995. Proposals must be received in the Office of Community Relations and Involvement, Office of Public and Indian Housing, Department of Housing and Urban Development, 451 Seventh St., SW., Room 4112, Washington, DC 20410 no later than 3:00 pm, local time on the proposal due date.

Comment Due Date: April 24, 1995.

ADDRESSES: Interested persons are invited to submit comments regarding this notice to the Rules Docket Clerk, Office of General Counsel, Room 10276, Department of Housing and Urban Development, 451 Seventh Street, SW, Washington, DC 20410–0500. Communications should refer to the above docket number and title. Facsimile (FAX) comments are *not* acceptable. A copy of each communication submitted will be available for public inspection and copying between 7:30 a.m. and 5:30 p.m. weekdays at the above address.

FOR FURTHER INFORMATION CONTACT: Patricia Lehrer, Office of Community Relations and Involvement, Department of Housing and Urban Development, 451 Seventh Street SW., Room 4112, Washington, DC 20410, Telephone Number (202) 619–8201. (This is not a toll free number). Hearing- or speech-impaired persons may use the Telecommunications Devices for the Deaf (TDD) by contacting the Federal Information Relay Service on (202) 708–9300 or 1–800–877–8339) for information on the program.

SUPPLEMENTARY INFORMATION:

I. Paperwork Reduction Act Statement

The information collection requirements contained in this notice have been submitted to the Office of Management and Budget for approval under the Paperwork Reduction Act of 1980 (44 U.S.C. 3501–3520). The OMB control number when assigned will be published by separate notice in the **Federal Register**.

II. Authority

The $9 million for the Public Housing Apprenticeship Demonstration Program in the Construction Trades and Public Housing Operations is funded from a portion of the $20 million appropriated in the Department of Veterans Affairs and Housing and Urban Development and Independent Agencies Appropriations Act for 1994 (Pub. L. 103–124, approved October 28, 1993) (the 1994 Appropriations Act), under the heading ''Severely Distressed Public Housing Projects'', for implementation of Youthbuild programs by eligible grantees under the Urban Revitalization Demonstration Program (HOPE VI). (On September 14, 1994 (59 FR 47222), the Department announced a Youth Apprenticeship program funded with a separate $10 million portion of the $20 million, which the Appropriations Act specifically earmarked for youth apprenticeship training activities pursuant to section 3 of the Housing and Urban Development Act of 1968, as amended (Economic Opportunities for Low- and Very-Low-Income Persons).) This grant program provides funds for the implementation of Youthbuild programs authorized under subtitle D of title IV of the Cranston-Gonzalez National Affordable Housing Act, as added by section 164 of the Housing and Community Development Act of 1992 (Pub. L. 102–550, approved October 28, 1992).

III. Announcement of Demonstration

This notice announces the Department's intention to award $9 million to HOPE VI eligible housing authorities who have partnered with the Laborers International Union of North America (LIUNA); the United Brotherhood of Carpenters and the International Brotherhood of Painters; and the American Federation of State, County and Municipal Employees (AFSCME) to enhance the long-term welfare of youth living in public housing through Apprenticeship Demonstration Programs.

In accordance with the requirements of section 470(a) of the Housing and Urban-Rural Recovery Act of 1983 (42 U.S.C. 3542), this notice describes the Public Housing Apprenticeship Demonstration Program in the Construction Trades and Public Housing Operations and invites public comment. Any changes made in this demonstration as a result of the Department's consideration of public comments, and any extension of time for commitment of funds that may be necessary because of these changes, also will be published in the **Federal Register**.

The Department will not commit funds for the demonstration until after the latest of: (1) The date the Department has considered any comments received in response to this notice; (2) May 22, 1995, which is 60 days after today's publication date; and (3) the date the Department has received and approved a proposal that meets the requirements set forth in this notice and any subsequent notice announcing changes in the demonstration.

IV. Maximum Award

The maximum award for a Public Housing Apprenticeship Demonstration Program in the Construction Trades and Public Housing Operations is $250,000; however, the Department reserves the right to increase the maximum individual award based on the number of applications funded.

The Memoranda of Agreement that the Department will enter with the above mentioned organizations will indicate that HUD will make up to $3.5 million available to public housing authorities to partner with the Laborers International Union of North America (LIUNA); up to $3.5 million available for housing authorities to partner with the United Brotherhood of Carpenters and the International Brotherhood of Painters; up to $2.0 million available to

housing authorities to partner with American Federation of State, County and Municipal Employees (AFSCME).

Under this demonstration, housing authorities may partner with one trade union and/or AFSCME.

V. Description of Demonstration

The Public Housing Apprenticeship Demonstration Program in the Construction Trades and Public Housing Operations is part of HUD's comprehensive strategy to restore and revitalize communities in urban America, preserve and rebuild public housing stock and create ladders of economic opportunity for public housing residents. This demonstration program specifically links public housing authorities (PHAs) and their residents and the following organizations: the Laborers International Union of North America (LIUNA); the United Brotherhood of Carpenters and the International Brotherhood of Painters; and the American Federation of State, County and Municipal Employees (AFSCME).

This demonstration will bring together the skills needed to provide public housing youth with job training, apprenticeship opportunities and employment opportunities leading to self-sufficiency. Further, this demonstration will assist PHAs in meeting the requirements of section 3 of the Housing and Urban Development Act of 1968, as amended (Economic Opportunities for Low- and Very-Low-Income Persons).

Eligible Public Housing Authorities

Under this demonstration, eligible public housing authorities include:

(1) Housing authorities that are recipients of HOPE VI grants, and/or

(2) Housing authorities on the Troubled PHA List as of 2/5/95, and/or

(3) Housing authorities in the 40 most populous cities.

Eligible PHAs will create partnerships with participating construction trade organizations and/or AFSCME. All participating construction trade organizations will subsequently recruit, train, mentor and place public housing residents in Department of Labor (DOL) approved apprenticeship programs. AFSCME will recruit, train, mentor and provide work experience and employment opportunities for youth in public housing.

Eligible Program Participants

Eligible program participants must be public housing residents, and in accordance with Youthbuild:

(1) Participants must be very low-income individuals aged 16 to 24 years, who are high school dropouts. An exception allows for 25 percent of the participants to be individuals who do not meet the program's income or educational requirements but who have educational needs despite attainment of a high school diploma or its equivalency.

(2) Any eligible individual selected for full-time participation in this program may be offered full-time participation for a period of not less than 6 months and not more than 24 months unless the apprenticeship program extends beyond this timeframe.

(3) Programs must be structured so that 50 percent of the time spent by participants in the program is devoted to educational services and activities. All educational programs and activities supported with funds from the demonstration program must be consistent with applicable State and local educational standards. Standards and procedures for academic credit and certifying educational attainment must be consistent with applicable State and local educational standards.

(4) Wages and benefits, labor standards, and nondiscrimination requirements shall apply under this program as they would under the Youthbuild program. Housing authorities participating in this demonstration program may not be prevented from using funds from non-Federal sources to increase wages and benefits under the program, if appropriate.

Eligible Activities

Eligible activities, under this program, are:

(1) Work and activities associated with the acquisition, rehabilitation, or construction of the housing and related facilities to be used in the program;

(2) Relocation payments and other assistance required to comply with 24 CFR 585.308;

(3) Costs for the ongoing training and technical assistance needs of the applicant that are related to carrying out this program;

(4) Education, job training, counseling, employment and leadership development services and activities;

(5) Wages, benefits and stipends for participants prior to entering an apprenticeship program or in the case of AFSCME an employment opportunity.

Restrictions

(1) The $9 million authorized under the Public Housing Apprenticeship Demonstration Program in the Construction Trades and Public Housing Operations may not be used for wages in any post-training employment provided under this program;

(2) No more than 15 percent of the total grant amount may be used for administrative costs.

Selection

Threshold Requirements

(1) The submission of an agreement that meets the requirements of the program;

(2) Certification that participants will be eligible as defined in the notice;

(3) A description of how training activities will prepare participants for apprenticeship and employment opportunities;

(4) Proof that residents are involved in the planning and implementation of the program;

(5) A description of efforts to provide job placement for successful program participants specifying the number of jobs that will be created; and

(6) The supportive services, based on projected need, that will be provided under the program. The Secretary reserves the right to award grants based on distribution among the three organizations referenced in this notice.

Method of Selection

Applications will be date and time stamped to authenticate when they were received. If the applicant meets the above mentioned threshold requirements, they will be funded in the order received (within the parameters set forth in Section IV—Maximum Awards) until the funding authorized for this program is no longer available.

The Secretary reserves the right to award grants based on distribution among the three organizations referenced in this notice. If a sufficient number of applications are not received, representing all three organizations, the Secretary reserves the right to award grants to the remaining applicants among the other organizations in accordance with the aforementioned requirements.

Reports

Each PHA receiving a grant shall submit to HUD an annual progress report (in a format to be provided by HUD) regarding the implementation of this program and the effectiveness of the Public Housing Apprenticeship Demonstration Program in the Construction Trades and Public Housing Operations in meeting its purpose.

Grantees will cooperate with researchers who will be carrying out an evaluation of this initiative for the Department.

Proposal Requirements

In order to receive the funding proposed in this notice, each PHA must submit a proposal describing its program in detail. Proposals are not limited to but must include:

(1) A copy of the agreement between the PHA and the construction trade organization or AFSCME;

(2) A description of how eligible participants will be recruited;

(3) An accompanying implementation schedule;

(4) A description of training and placement activities under the demonstration;

(5) A description of resident involvement in the program's planning and implementation;

(6) A description of efforts to provide job placement for successful program participants;

(7) A description of how program success will be measured, describing the baseline indicators against which success will be measured; and

(8) A description of how program participants' supportive service needs will be met.

Dated: March 16, 1995.

Michael B. Janis,

General Deputy Assistant Secretary for Public and Indian Housing.

[FR Doc. 95–7106 Filed 3–22–95; 8:45 am]

BILLING CODE 4210–33–P

federal register

Thursday
March 23, 1995

Part VII

Department of Defense

Corps of Engineers, Department of the Army

Proposal to Issue a Nationwide Permit; Notice

DEPARTMENT OF DEFENSE

Department of the Army

Corps of Engineers

Proposal to Issue a Nationwide Permit

AGENCY: U.S. Army Corps of Engineers, DoD.

ACTION: Notice.

SUMMARY: As a part of our effort to improve the regulatory program, the Army Corps of Engineers is proposing to issue a new nationwide general permit (NWP) under Section 404 of the Clean Water Act and Section 10 of the Rivers & Harbors Act for single-family residential development. The NWP will provide for effective protection of the aquatic environment while substantially reducing regulatory burdens on landowners.

In August 1993, the Clinton Administration announced a comprehensive package of improvements to the Federal wetlands program that identified measures to enhance the fairness, flexibility, and effectiveness of the wetlands program. A major focus of the Administration's Wetland Plan is intended to address the concerns of landowners by streamlining Section 10 and 404 permitting programs where possible while maintaining needed environmental protection.

The public is invited to provide comments on this proposal and is being given the opportunity to request a public hearing on the proposed NWP.

DATES: Comments must be received by May 8, 1995.

ADDRESSES: Comments should be submitted in writing to: Office of the Chief of Engineers, ATTN: CECW–OR, 20 Massachusetts Avenue NW, Washington, DC 20314–1000. Comments will be available for examination at the Office of the Chief of Engineers, Room 6225, Pulaski Building, 20 Massachusetts Avenue NW, Washington, DC 20314–1000.

FOR FURTHER INFORMATION CONTACT: Mr. Peter Kube or Mr. Sam Collinson, Regulatory Branch, Office of the Chief of Engineers at (202) 272–0817.

SUPPLEMENTARY INFORMATION:

Background

The White House Office on Environmental Policy announced the President's Wetlands Plan on August 24, 1993. The plan set forth a comprehensive package of improvements to the Federal wetlands protection programs. A major goal of the plan is to ensure that programs are fair, flexible, and effective. To achieve this goal, the Corps regulatory program must continue to provide effective protection of wetlands while conveying to the public a clear understanding of regulatory requirements. In its implementation, the regulatory program must be administratively efficient, flexible yet predictable, and avoid unnecessary impacts to private property and the regulated public.

We are proposing this new NWP to support the objectives in the President's Wetlands Plan. The new NWP would authorize activities in wetlands related to the construction or expansion of a single-family home. This would allow, for example, a couple to build a retirement home on wetlands property they own without applying for an individual Section 404 permit. The NWP includes limits and conditions to minimize impacts on the aquatic environment.

There is a perception by many in the country that the regulatory process has become too burdensome on small landowners simply desiring to build a home. This nationwide general permit has been developed to reduce the regulatory burden on small landowners proposing to build or expand a single-family home while simultaneously maintaining environmental safeguards. It seeks to strike this balance by allowing a landowner to build or expand a home with minimal regulatory oversight while protecting the aquatic resource through specific limitations. If finalized, the new NWP will allow the Corps to focus better its resources on areas that have the potential for greater environmental impacts. Further, as the Corps realizes workload savings resulting from this NWP it should be able to improve service to other sectors of the regulated public (e.g., large developments).

Proposed NWP for Single Family Housing

In order to address the above concerns, the Corps proposes to issue the following NWP.

Discharges of dredged or fill material into non-tidal wetlands for the construction or expansion of a single-family home and attendant features, such as a garage, driveway, storage shed, and/or septic field, provided:

a. The discharge into waters of the United States does not cause the loss of more than ½ acre;

b. The permittee notifies the District Engineer in accordance with the ''Notification'' general condition (as modified for this NWP only);

c. The permittee has taken necessary actions to minimize the on-site and off-site impacts of the discharge. For example, the location of the home may need to be adjusted on-site to avoid flooding of adjacent property owners;

d. The discharge is part of a single and complete project and that for any subdivision created after March 6, 1995 the permittee notifies the District Engineer of any discharge which would cause the aggregate total loss of waters of the United States for the entire subdivision to exceed ½ acre; and

e. an individual may use this nationwide permit only once.

For the purposes of this nationwide permit, the acreage of loss of waters of the United States includes the filled area plus any other waters of the United States that are adversely affected by flooding, excavation, or drainage as a result of the project. (Sections 10 & 404)

The above NWP is being proposed under the authority of Section 404(e) of the Clean Water Act (33 U.S.C. 1344) and Section 10 of the Rivers and Harbors Act of 1899 (33 U.S.C. 401 *et seq.*).

Discussion

We are requesting comments on the following specific issues:

MAXIMUM ACREAGE: General permits are designed to authorize categories of activities in waters of the United States that will have minimal individual and cumulative impacts. This NWP would allow discharges affecting up to ½ acre of non-tidal waters and wetlands for the construction or expansion of a single-family home and attendant features, such as the construction of a driveway, garage, and/or septic field. For purposes of this NWP, impacts include the filled area plus any wetlands adversely affected by flooding, excavation, or drainage. The actual loss of wetlands that would be authorized under the NWP would be limited to the minimum necessary for construction of the house and attendant features. (See discussion below on mitigation.) The NWP may not be used in combination with other general permits if the cumulative impacts from all activities are more than minimal.

We believe that ½ acre is sufficient for the vast majority of single-family homes. However, we are interested in receiving comments regarding the maximum acreage of impact to be allowed under this authorization. Should the maximum acreage be reduced to ⅛ or ¼ acre or should the maximum acreage of impact be increased to ¾ or 1 acre? The maximum acreage allowed under this NWP will be dependant on how the term ''attendant features'' is defined. We are interested in comments regarding a definition of

the term ''attendant features''. Should the authorization be limited to fill for foundations and building pads or should fill also be allowed for any attendant amenity as currently proposed, such as a yard, tennis courts, and/or swimming pool under this NWP?

2. *PRE-CONSTRUCTION NOTIFICATION:* Individuals proposing to use the NWP will have to first notify the Corps in accordance with procedures of General Condition #13, Notification, as modified below. We propose to streamline the pre-construction notification (PCN) procedure by not requiring the Corps to coordinate with the Federal resource agencies, nor requiring the applicant to submit advance notice to the Fish & Wildlife Service or the State Historic Preservation Officer. Specifically, the Notification condition would be modified for this NWP as follows:

13. Notification. (a) The prospective permittee must notify the District Engineer with a Pre-construction Notification (PCN) as early as possible and shall not begin the activity authorized by this NWP:

(1) Until notified by the District Engineer that the activity may proceed under the NWP with any special conditions imposed by the District or Division Engineer; or

(2) If notified by the District or Division Engineer that an individual permit is required; or

(3) Unless 30 days have passed from the District Engineer's receipt of the notification and the prospective permittee has not received notice from the District or Division Engineer. Subsequently, the permittee's right to proceed under the NWP may be modified, suspended, or revoked only in accordance with the procedure set forth in 33 CFR 330.5(d)(2).

(b) The notification must be in writing and include the following information:

(1) Name, address and telephone number of the prospective permittee;

(2) Location of the proposed project;

(3) Brief description of the proposed project; the project's purpose; direct and indirect adverse environmental effects the project would cause; any other NWP(s), regional general permit(s) or individual permit(s) used or intended to be used to authorize any part of the proposed project or any related activity.

(c) The standard individual permit application form (Form ENG 4345) may be used as the notification but must clearly indicate that it is a PCN and must include all of the information required in (b) (1)–(3) of this General Condition.

(d) In reviewing an activity under the notification procedure, the District Engineer will determine whether the activity will result in more than minimal individual or cumulative adverse environmental effects or will be contrary to the public interest. The District Engineer will consider any optional mitigation the applicant has included in the proposal in determining whether the net adverse environmental effects of the proposed work are minimal. If the District Engineer determines that the activity complies with the terms and conditions of the NWP and that the adverse effects are minimal, he will notify the permittee and include any agreed upon special conditions and/or mitigation. If the District Engineer determines that the adverse effects of the proposed work are more than minimal, then he will notify the applicant that the project does not qualify for authorization under the NWP and instruct the applicant on the procedures to seek authorization under an individual permit.

(e) Wetlands Delineations: When necessary, wetland delineations must be prepared in accordance with the current method required by the Corps. The permittee may ask the Corps to delineate the wetland. However, there may be some delay if the Corps does the delineation and the 30-day period will not start until the wetland delineation has been completed.

We are requesting comments on the PCN. Should the requirement for Corps and applicant coordination of project impacts with the resource agencies be retained? Is the PCN to the Corps needed in all cases? Should there be a size limit such as 1/10, 1/8, 1/4 acre where no PCN is required?

3. *MITIGATION:* No compensatory wetland mitigation is required under this authorization. However, the landowner must take reasonable on-site measures to minimize adverse impacts to aquatic resources. For example, the location of a home may need to be adjusted on-site to avoid flooding of adjacent property. Further, on-site minimization steps must be taken to minimize the loss of waters of the United States. For example, if a landowner currently owns 20 acres of land, 15 acres of which is non-wetland, we do not believe it is unreasonable to require the use of the non-wetland portion of the property where practicable.

We are requesting comments on our proposal to require no compensatory mitigation for this NWP. Should we require mitigation for all wetland losses as a result of this permit or should we require it if the fill exceeds a certain acreage, such as 1/4 acre? Alternatively, should compensatory mitigation only be required for certain attendant features such as the fill necessary for a yard?

4. *SUBDIVISIONS:* In order to ensure that only minimal individual and cumulative impacts occur, this authorization is not intended to allow individual landowners to impact more than a total of 1/2 acre of waters of the United States. Discharges authorized by this NWP must be part of a single and complete project and individuals may use this NWP only once for all property owned now and in the future. For any real estate subdivision legally created or subdivided before March 6, 1995, the owner of each legally plated lot site may use this NWP. Should we allow individuals to use this nationwide permit more than once (e.g. twice, for a primary residence and a second home) or should its use by individuals not be limited.

For any real estate subdivision created or subdivided after March 6, 1995, discharges authorized under this NWP may not exceed an aggregate total loss of waters of the United States of 1/2 acre for the entire subdivision. For purposes of this NWP, the term ''real estate subdivision'' shall be interpreted to include circumstances where a landowner or developer divides a tract of land into smaller parcels for the purpose of selling, conveying, transferring, leasing, or developing said parcels. This would include the entire area of a residential, commercial or other real estate subdivision, including all parcels and parts thereof.

March 6, 1995 is being proposed because that is the date this NWP was announced to the public. Should the March 6, 1995 date be changed to be consistent with the NWP #26 subdivision clause of October 5, 1984, or some other date? Also, are there other options, rather than the Subdivision provision, that would prevent developers from dividing and selling building sites, in the future, to circumvent the limits of this nationwide permit?

Nationwide Permit Conditions

This proposed NWP will be subject to the conditions that apply to all nationwide permits. These conditions are found at 33 CFR Part 330 Appendix A(C). As noted above, condition #13 has been modified for purposes of this NWP only.

Regional Conditions

Concurrent with this **Federal Register** notice, District Engineers are issuing local public notices. In addition to the NWP conditions being proposed by the Chief of Engineers, the Division and District Engineers may propose regional

conditions or propose revocation of NWP authorization for all or portions of this NWP. Regional conditions may also be required by state Section 401 water quality certification or for state coastal zone consistency. Comments on the **Federal Register** notice that address national concerns relating to the proposed NWP and its conditions should be sent to the U.S. Army Corps of Engineers, CECW–OR, 20 Massachusetts Avenue N.W., Washington, D.C 20314–1000. Comments on regional issues and regional conditions should be sent to the appropriate District Engineer as indicated below.

ALABAMA
Mobile District Engineer, ATTN: CESAM–OP–S, P.O. Box 2288, Mobile, AL 36628–0001
ALASKA
Alaska District Engineer, ATTN: CENPA–CO–R, P.O. Box 898, Anchorage, AK 99506–0898
ARIZONA
Los Angeles District Engineer, ATTN: CESPL–CO–R, P.O. Box 2711, Los Angeles, CA 90053–2325
ARKANSAS
Little Rock District Engineer, ATTN: CESWL–CO–P, P.O. Box 867, Little Rock, AR 72203–0867
CALIFORNIA
Sacramento District Engineer, ATTN: CESPK–CO–O, 1325 J Street, Sacramento, CA 95814–4794
COLORADO
Albuquerque District Engineer, ATTN: CESWA–CO–R, P.O. Box 1580, Albuquerque, NM 87103–1580
CONNECTICUT
New England Division Engineer, ATTN: CENED–OD-R, 424 Trapelo Road, Waltham, MA 02254–9149
DELAWARE
Philadelphia District Engineer, ATTN: CENAP–OP–R, Wannamaker Building, 100 Penn Square, East Philadelphia, PA 19107–3390
FLORIDA
Jacksonville District Engineer, ATTN: CESAJ–RD, P.O. Box 4970, Jacksonville, FL 32232–0019
GEORGIA
Savannah District Engineer, ATTN: CESAS–OP–F, P.O. Box 889, Savannah, GA 31402–0889
HAWAII
Honolulu District Engineer, ATTN: CEPOD–CO–O, Building 230, Fort Shafter, Honolulu, HI 96858–5440
IDAHO
Walla Walla District Engineer, ATTN: CENPW–OP–RF, Building 602, City-County Airport, Walla Walla, WA 99362–9265
ILLINOIS
Rock Island District Engineer, ATTN: CENCR–OD–S, Clock Tower Building, P.O. Box 2004, Rock Island, IL 61201–2004
INDIANA
Louisville District Engineer, ATTN: CEORL–OR–F, P.O. Box 59, Louisville, KY 40201–0059
IOWA
Rock Island District Engineer, ATTN: CENCR–OD–S, Clock Tower Building, Rock Island, IL 61201–2004
KANSAS
Kansas City District Engineer, ATTN: CEMRK–OD–P, 700 Federal Building, 601 E. 12th Street, Kansas City, MO 64106–2896
KENTUCKY
Louisville District Engineer, ATTN: CEORL–OR–F, P.O. Box 59, Louisville, KY 40201–0059
LOUISIANA
New Orleans District Engineer, ATTN: CELMN–OD–S, P.O. Box 60267, New Orleans, LA 70160–0267
MAINE
New England Division Engineer, ATTN: CENED–OD–R, 424 Trapelo Road, Waltham, MA 02254–9149
MARYLAND
Baltimore District Engineer, ATTN: CENAB–OP–R, P.O. Box 1715, Baltimore, MD 21203–1715
MASSACHUSETTS
New England Division Engineer, ATTN: CENED–OD–R, 424 Trapelo Road, Waltham, MA 02254–9149
MICHIGAN
Detroit District Engineer, ATTN: CENCE–CO–L, P.O. Box 1027, Detroit, MI 48231–1027
MINNESOTA
St. Paul District Engineer, ATTN: CENCS–CO–R, 190 Fifth Street, East, St. Paul, MN 55101–1638
MISSISSIPPI
Vicksburg District Engineer, ATTN: CELMV–CO–O, P.O. Box 80, Vicksburg, MS 39180–0080
MISSOURI
Kansas City District Engineer, ATTN: CEMRK–OD–P, 700 Federal Building, 601 E. 12th Street, Kansas City, MO 64106–2896
MONTANA
Omaha District Engineer, ATTN: CEMRO–OP–R, P.O. Box 5, Omaha, NE 68101–0005
NEBRASKA
Omaha District Engineer, ATTN: CEMRO–OP–R, 215 North 17th Street, Omaha, NE 68101–4978
NEVADA
Sacramento District Engineer, ATTN: CESPK–CO–O, 1325 J Street, Sacramento, CA 95814–2922
NEW HAMPSHIRE
New England Division Engineer, ATTN: CENED–OD–R, 424 Trapelo Road, Waltham, MA 02254–9149
NEW JERSEY
Philadelphia District Engineer, ATTN: CENAP–OP–R, Wanamaker Building, 100 Penn Square East, Philadelphia, PA 19106–2991
NEW MEXICO
Albuquerque District Engineer, ATTN: CESWA–CO–R, P.O. Box 1580, Albuquerque, NM 87103–1580
NEW YORK
New York District Engineer, ATTN: CENAN–OP–R, Jacob K. Javits Federal Building, New York, NY 10278–0090
NORTH CAROLINA
Wilmington District Engineer, ATTN: CESAW–CO–E, P.O. Box 1890, Wilmington, NC 28402–1890
NORTH DAKOTA
Omaha District Engineer, ATTN: CEMRO–OP–R, 215 North 17th Street, Omaha, NE 68102–4978
OHIO
Huntington District Engineer, ATTN: CEORH–OR–F, 502 8th Street, Huntington, WV 25701–2070
OKLAHOMA
Tulsa District Engineer, ATTN: CESWT–OD–RF, 1645 South 101 East Avenue, Tulsa, OK 74128–4629
OREGON
Portland District Engineer, ATTN: CENPP–PL–R, P.O. Box 2946, Portland, OR 97208–2946
PENNSYLVANIA
Baltimore District Engineer, ATTN: CENAB–OP–R, P.O. Box 1715, Baltimore, MD 21203–1715
RHODE ISLAND
New England Division Engineer, ATTN: CENED–OD–R, 424 Trapelo Road, Waltham, MA 02254–9149
SOUTH CAROLINA
Charleston District Engineer, ATTN: CESAC–CO–P, P.O. Box 919, Charleston, SC 29402–0919
SOUTH DAKOTA
Omaha District Engineer, ATTN: CEMRO–OP–R, 215 North 17th Street, Omaha, NE 68102–4978
TENNESSEE
Nashville District Engineer, ATTN: CEORN–OR–F, P.O. Box 1070, Nashville, TN 37202–1070
TEXAS
Ft. Worth District Engineer, ATTN: CESWF–OD–O, P.O. Box 17300, Ft. Worth, TX 76102–0300
UTAH
Sacramento District Engineer, ATTN: CESPK–CO–O, 1325 J Street, CA 95814–4794
VERMONT
New England Division Engineer, ATTN: CENED–OD–R, 424 Trapelo

Road, Waltham, MA 02254–9149
VIRGINIA
Norfolk District Engineer, ATTN: CENAO–OP–P, 803 Front Street, Norfolk, VA 23510–1096
WASHINGTON
Seattle District Engineer, ATTN: CENPS–OP–RG, P.O. Box 3755, Seattle, WA 98124–2255
WEST VIRGINIA
Huntington District Engineer, ATTN: CEORH–OR–F, 502 8th Street, Huntington, WV 25701–2070
WISCONSIN
St. Paul District Engineer, ATTN: CENCS–CO–R, 190 Fifth Street, East, St. Paul, MN 55101–1638
WYOMING
Omaha District Engineer, ATTN: CEMRO–OP–R, 215 North 17th Street, NE 68102–4978
DISTRICT OF COLUMBIA
Baltimore District Engineer, ATTN: CENAB–OP–R, P.O. Box 1715, Baltimore, MD 21203–1715
PACIFIC TERRITORIES
Honolulu District Engineer, ATTN: CEPOD–CO–O, Building 230, Fort Shafter, Honolulu, HI 96858–5440
PUERTO RICO AND VIRGIN ISLANDS
Jacksonville District Engineer, ATTN: CESAJ–RD, P.O. Box 4970, Jacksonville, FL 32232–0019

State Certification of Nationwide Permits

Section 401 of the Clean Water Act: This **Federal Register** notice of this NWP serves as the Corps application to the states or EPA, where appropriate, for 401 water quality certification of the activities authorized by this NWP. The states and EPA, where appropriate, are requested to issue, deny, or waive certification pursuant to 33 CFR 330.4(c) for this NWP.

Section 307 of the Coastal Zone Management Act: This **Federal Register** notice serves as the Corps determination that the activities authorized by this NWP are consistent with States' coastal zone management programs, where applicable. This determination is contingent upon the addition of State CZM conditions and/or regional conditions or the issuance by the state of an individual consistency concurrence, where necessary. The states are requested to agree or disagree with this consistency determination pursuant to 33 CFR 330.4(d) for this NWP.

Environmental Documentation

We have made a preliminary determination that this action does not constitute a major Federal action significantly affecting the quality of the human environment. Preliminary environmental documentation has been prepared for the proposed nationwide permit. This documentation includes a preliminary environmental assessment and a preliminary Section 404(b)(1) Guidelines compliance review. Copies of these documents are available for inspection at the office of the Chief of Engineers and at each Corps District office. Based on these documents the Corps has provisionally determined that the proposed NWP complies with the requirements for issuance under general permit authority.

Dated: March 15, 1995.

Stanley G. Genega,

Major General, USA, Director of Civil Works.

[FR Doc. 95–7206 Filed 3–21–95; 9:25 am]

BILLING CODE 3710–92–M

federal register

Thursday
March 23, 1995

Part VIII

Department of Education

34 CFR Part 607

Strengthening Institutions Program; Rule and Notice

DEPARTMENT OF EDUCATION

34 CFR Part 607

RIN 1840–AC15

Strengthening Institutions Program

AGENCY: Department of Education.

ACTION: Final regulations and notice of effective date.

SUMMARY: The Secretary revises the regulations governing the Strengthening Institutions Program published in the **Federal Register** on August 15, 1994 (59 FR 41914) to conform them to statutory provisions that authorize grants to Hispanic-serving Institutions (HSIs). The regulations make technical changes in the existing regulations to incorporate the statutory amendments.

EFFECTIVE DATES: The regulations published on August 15, 1994 (59 FR 41914) became effective on September 29, 1994. The regulations in this document take effect April 24, 1995.

FOR FURTHER INFORMATION CONTACT: Jerry M. Whitlock, U.S. Department of Education, 600 Independence Avenue, S.W., Suite 600, Portals Building, Washington, D.C. 20202–5335. Telephone: (202) 708–9926. Individuals who use a telecommunications device for the deaf (TDD) may call the Federal Information Relay Service (FIRS) at 1–800–877–8339 between 8 a.m. and 8 p.m., Eastern time, Monday through Friday.

SUPPLEMENTARY INFORMATION:

A. Background

Section 316 of the Higher Education Act of 1965, as amended (HEA), authorizes the Secretary to make grants to HSIs to enable them to improve and expand their capacity to serve Hispanic and low-income students by carrying out activities described in section 316(c)(2) of the HEA and repeated in § 607.10(b)(8). To receive a grant under section 316, an institution must qualify as an eligible institution under the Strengthening Institutions program and must be determined by the Secretary to be an HSI. The Secretary determines that an eligible institution under the Strengthening Institutions program qualifies as an HSI if—(1) when it applies for a grant, at least 25 percent of its enrollment of undergraduate full-time equivalent students are Hispanic students; and (2) it assures that not less than 50 percent of its Hispanic students are low-income individuals who are first generation college students, and another 25 percent of its Hispanic students are either low-income or first generation college students.

Grants to HSIs, as part of the Strengthening Institutions program, are an important part of implementing the National Educational Goals. Specifically, the grants address the goal that calls for every adult American to possess the knowledge and skills necessary to compete in a global economy and exercise the rights and responsibilities of citizenship, by expanding educational opportunities for students who attend HSIs.

B. Explanation of Changes

The Higher Education Amendments of 1992, Pub. L. 102–325, amended section 316 of the HEA. The Secretary amends regulations in 34 CFR Part 607 to conform them to the amended statute.

The statutory amendments incorporated in the regulations:

—Authorize section 316 grants to assist HSIs to plan, develop, undertake, and carry out approved program activities.

—Define an HSI.

—Define the terms ''first generation college student'' and ''low-income individual'' in § 607.7, and add a definition of the term ''Hispanic student.'' This definition was taken from the definition of that term in OMB Directive No. 15.

—Add activities that may be carried out under a grant authorized under section 316 of the HEA to an HSI.

—Require a 5-year plan for improving the assistance provided by the HSI to Hispanic and low-income students.

—Establish a priority funding for applications for grants under section 316 that contain satisfactory evidence that such applicants have entered into or will enter into a collaborative arrangement with at least one local educational agency to provide such agency with assistance in reducing Hispanic dropout rates, improving Hispanic rates of academic achievement, and increasing the rates at which Hispanic high school graduates enroll in higher education.

—Establish a restriction that no HSI which receives funds under section 316 may concurrently receive other funds under the Strengthening Institutions Program, Strengthening Historically Black Colleges and Universities program, or Strengthening Historically Black Graduate Institutions program.

—Amend § 607.3(b) by removing the word ''waives'' in paragraph (b), and adding, in its place, the words ''may waive'' to clarify that the Secretary's decision to grant a waiver is discretionary.

Executive Order 12900

These final regulations support the President's goals expressed in Executive Order 12900 on ''Educational Excellence for Hispanic Americans'' by advancing the development of human potential, strengthening the Nation's capacity to provide high-quality education, and increasing opportunities for Hispanic Americans to participate in and benefit from Federal education programs.

Intergovernmental Review

The program is subject to the requirements of Executive Order 12372 and the regulations in 34 CFR Part 79. The objective of the Executive order is to foster an intergovernmental partnership and a strengthened federalism by relying on processes developed by State and local governments for coordination and review of proposed Federal financial assistance.

In accordance with the order, this document is intended to provide early notification of the Secretary's specific plans and actions for this program.

Assessment of Educational Impact

The Secretary has determined that the regulations in this document do not require transmission of information that is being gathered by or is available from any other agency or authority of the United States.

Waiver of Proposed Rulemaking

It is the practice of the Secretary to offer interested parties the opportunity to comment on proposed regulations in accordance with the Administrative Procedure Act (5 U.S.C. 553). However, since these changes merely incorporate statutory amendments into the regulations and do not implement substantive policy, public comment could have no effect. Therefore, the Secretary has determined pursuant to 5 U.S.C. 553(b)(B) that public comment on the regulations is unnecessary and contrary to the public interest.

List of Subjects in 34 CFR Part 628

Colleges and universities, Education, Reporting and recordkeeping requirements.

Dated: March 20, 1995.

David A. Longanecker,

Assistant Secretary for Postsecondary Education.

(Catalog of Federal Domestic Assistance Number 84.031A—Strengthening Institutions Program)

The Secretary amends Part 607 of Title 34 of the Code of Federal Regulations as follows:

PART 607—STRENGTHENING INSTITUTIONS PROGRAM

1. The authority citation for Part 607 continues to read as follows:

Authority: 20 U.S.C. 1057–1059, 1066–1069f, unless otherwise noted.

2. Section 607.2 is amended by redesignating paragraph (d) as paragraph (e)(1); adding new paragraphs (d) and (e)(2); and revising the authority citation to read as follows:

§ 607.2 What institutions are eligible to receive a grant under the Strengthening Institutions Program?

* * * * *

(d) A Hispanic-serving institution (HSI) may receive a grant authorized under section 316 of the HEA if—

(1) It is an eligible institution under this part;

(2) It provides assurances that—

(i) When it applies for a grant, its enrollment of undergraduate full-time equivalent students is at least 25 percent Hispanic students ;

(ii) Not less than 50 percent of its Hispanic students are low-income individuals who are first generation college students; and

(iii) Another 25 percent of its Hispanic students are either low-income individuals or first generation college students.

(e) * * *

(2) An HSI that receives a grant under section 316 of the HEA may not concurrently receive grant funds under the Strengthening Institutions program, Strengthening Historically Black Colleges and Universities program, or Strengthening Historically Black Graduate Institutions program.

(Authority: 20 U.S.C. 1057 et seq.)

§ 607.3 [Amended]

3. Section 607.3 is amended by removing the word ''waives'' in paragraph (b), and adding, in its place, the words ''may waive''.

4. Section 607.7 is amended by redesignating paragraph (b) as paragraph (c); adding a new paragraph (b); adding a new definition of ''Hispanic student'' to redesignated paragraph (c) in alphabetical order; and revising the authority citation to read as follows:

§ 607.7 What definitions apply?

* * * * *

(b) The following terms used in this part are defined in section 316 of the HEA:

First generation college student
Hispanic-serving institution
Low-income individuals

(c) * * *

Hispanic student means a person of Mexican, Puerto Rican, Cuban, Central or South American, or other Spanish culture or origin, regardless of race.

* * * * *

(Authority: 20 U.S.C. 1051, 1057–1059 and 1066–1069f; OMB Directive No. 15)

5. Section 607.10 is amended by removing the word ''or'' at the end of paragraph (b)(5)(ii); removing the period at the end of paragraph (b)(6)(ii), and adding, in its place, a semicolon; removing the period at the end of paragraph (b)(7), and adding, in its place, ''; or''; adding a new paragraph (b)(8); and revising the authority citation to read as follows:

§ 607.10 What activities may and may not be carried out under a grant?

* * * * *

(b) * * *

(8) For grants authorized under section 316 of the HEA to HSIs—

(i) Purchase, rental, or lease of scientific or laboratory equipment for educational purposes, including instructional and research purposes;

(ii) Renovation and improvement in classroom, library, laboratory, and other instructional facilities;

(iii) Support of faculty exchanges, faculty development, and faculty fellowships to assist in attaining advanced degrees in their field of instruction;

(iv) Curriculum development and academic instruction;

(v) Purchase of library books, periodicals, microfilm, and other educational materials;

(vi) Funds and administrative management, and acquisition of equipment for use in strengthening funds management;

(vii) Joint use of facilities such as laboratories and libraries; and

(viii) Academic tutoring and counseling programs and student support services.

* * * * *

(Authority: 20 U.S.C. 1057 *et seq.*)

6. Section 607.11 is amended by removing the word ''and'' at the end of paragraph (b); removing the period at the end of paragraph (d)(3), and adding, in its place, ''; and''; adding a new paragraph (e); and revising the authority citation to read as follows:

§ 607.11 What must be included in individual development applications?

* * * * *

(e) For a grant under section 316 of the HEA to an HSI, as a part of the applicant's Comprehensive Development Plan (CDP) required in § 607.8, a five-year plan for improving the assistance provided by the HSI to Hispanic and other low-income students.

(Authority: 20 U.S.C. 1057 *et seq.*)

7. Section 607.20 is amended by adding the word ''individual'' before the word ''grantees'' in paragraph (b)(1); by removing the words ''a grantee'' in paragraph (b)(1), and adding, in their place, the words ''an individual grantee''; and by removing the words ''a grantee'' in paragraph (b)(2), and adding, in their place, the words ''an individual grantee''.

8. Section 607.23 is amended by adding a new paragraph (e) and revising the authority citation to read as follows:

§ 607.23 What special funding consideration does the Secretary provide?

* * * * *

(e) The Secretary gives priority to applications from HSIs that contain satisfactory evidence that the HSI has entered into or will enter into a collaborative arrangement with at least one local educational agency to provide that agency with assistance (from funds other than funds provided under Title III Part A of the HEA) in—

(1) Reducing the dropout rates of Hispanic students;

(2) Improving rates of academic achievement of Hispanic students; and

(3) Increasing the rates at which Hispanic high school graduates enroll in higher education.

(Authority: 20 U.S.C. 1057 *et seq.*)

[FR Doc. 95–7273 Filed 3–22–95; 8:45 am]

BILLING CODE 4000–01–P

DEPARTMENT OF EDUCATION

[CFDA No.: 84.031A]

Grants to Hispanic-Serving Institutions (HSI) Authorized by Section 316 of Title III of the Higher Education Act (HEA) of 1965, as Amended

Notice inviting applications for new awards for fiscal year 1995.

Purpose of Program: Provide grants to eligible institutions of higher education to assist them to improve and expand their capacity to serve Hispanic and other students.

This grant program provides applicants an opportunity to support those elements of the National Education Goals that are relevant to their unique missions.

Deadline for Transmittal of Applications: May 8, 1995.

Deadline for Intergovernmental Review: June 8, 1995.

Applications Available: The Department will mail applications by March 24, 1995, to the office of the president of all institutions that have applied to be designated as eligible for a grant under the Strengthening Institutions Program.

Available Funds: $12,000,000.

Estimated Range of Awards: $300,000 to $350,000 per year.

Estimated Average Size of Awards: $325,000 per year.

Estimated Number of Awards: 35 development grants.

Note: The Department is not bound by any estimates in this notice.

Project Period: 60 months.

Special Funding Considerations: A HSI that is eligible for and receives a grant under section 316 of the HEA may not concurrently receive funds under the Strengthening Institutions Program, the Strengthening Historically Black Colleges and Universities Program, or the Strengthening Historically Black Graduate Institutions Program.

In tie-breaking situations described in 34 CFR 607.23 of the Strengthening Institutions Program regulations, the Secretary awards additional points under 34 CFR 607.22 to an application from an institution that has an endowment fund for which the current market value, per FTE student, is less than the average per FTE student at similar type institutions; and has expenditures for library materials, per FTE student, that are less than the average, per FTE student, at similar type institutions.

For the purposes of these funding considerations, an applicant must be able to demonstrate that the current market value of its endowment fund, per FTE student, or expenditures for library materials, per FTE student, is less than the following national average for base year 1992–93.

	Average market value of endowment fund, per FTE	Average library expenditures for materials, per FTE
Two-year public institutions	$1,222	$41
Two-year non-profit, private institutions	12,600	104
Four-year public institutions	1,862	141
Four-year non-profit	32,164	239

Applicable Regulations: (a) The Department of Education General Administrative Regulations (EDGAR) in 34 CFR Parts 74, 75, 77, 79, 82, 85, and 86; and (b) the Strengthening Institutions Program regulations in 34 CFR Part 607, as amended and published elsewhere in this issue of the **Federal Register**.

Priorities: The Secretary gives an absolute preference to an application that contains satisfactory evidence that the applicant has entered into or will enter into a collaborative arrangement with at least one local educational agency to provide that agency with assistance, from funds other than grant funds, in reducing Hispanic dropout rates, improving Hispanic rates of academic achievement, and increasing the rates at which Hispanic high school graduates enroll in institutions of higher education.

SUPPLEMENTARY INFORMATION: To be eligible to receive a grant, an institution must qualify as an eligible institution under the Strengthening Institutions Program and must be determined by the Secretary to be an HSI. The Secretary determines that an eligible institution under the Strengthening Institutions Program qualifies as an HSI if—(1) when it applies for a grant, at least 25% of its enrollment of undergraduate full-time equivalent students are Hispanic students; and (2) it assures that not less than 50% of its Hispanic students are low-income individuals who are first-generation college students, and another 25% of its Hispanic students are either low-income or first-generation college students.

The Secretary will conduct for fiscal years 1995 and 1996 a biennial grant award competition for grants to HSIs under section 316 of the HEA. Under a biennial grant award competition, an institution submits a grant application that may be considered for funding under two successive fiscal year grant award competitions. Applications are evaluated and ranked by field readers for the first competition. If the institution's application is not selected for funding under the first fiscal year's award competition, it will be considered for funding under the second fiscal year's award competition for new awards, based upon the score it received in the first competition. As part of the plan, the Secretary will not invite applications for new awards for the second fiscal year. Accordingly, if an HSI wishes to apply for a new grant award for fiscal year 1995 or fiscal year 1996, the HSI must submit an application by the closing date of May 8, 1995. The applicant should identify the fiscal year (1995 and/or 1996) for which it seeks funding.

The Secretary will not make awards for planning grants under this competition.

For Applications or Information Contact: Jerry M. Whitlock, U.S. Department of Education, 600 Independence Avenue, S.W., Portals Building, Suite 600, Washington, D.C. 20202–5335. Telephone: (202) 708–9926. Individuals who use a telecommunications device for the deaf (TDD) may call the Federal Information Relay Service (FIRS) at 1–800–877–8339 between 8 a.m. and 8 p.m., Eastern Time, Monday through Friday.

You may view information about the Department's funding opportunities, including copies of application notices for discretionary grant competitions, on the Department's electronic bulletin board (ED Board), telephone (202) 260–9950; or on the Internet Gopher Server at GOPHER.ED.GOV (under Announcements, Bulletins and Press releases). However, the official application notice for a discretionary grant competition is the notice published in the **Federal Register**.

Program Authority: 20 U.S.C. 1057.

Dated: March 17, 1995.

David A. Longanecker,

Assistant Secretary for Postsecondary Education.

[FR Doc. 95–7274 Filed 3–22–95; 8:45 am]

BILLING CODE 4000–01–P

federal register

Thursday
March 23, 1995

Part IX

Department of Defense

General Services Administration

National Aeronautics and Space Administration

48 CFR Parts 1, 32, 33 and 52

Federal Acquisition Regulation (FAR); Ratification and Protest Costs: Proposed Rule

DEPARTMENT OF DEFENSE

GENERAL SERVICES ADMINISTRATION

NATIONAL AERONAUTICS AND SPACE ADMINISTRATION

48 CFR Parts 1, 32, 33, and 52

[FAR Case 94–731]

RIN 9000–AG52

Federal Acquisition Regulation; Ratification and Protest Costs

AGENCIES: Department of Defense (DOD), General Services Administration (GSA), and National Aeronautics and Space Administration (NASA).

ACTION: Proposed rule.

SUMMARY: This proposed rule is issued pursuant to the Federal Acquisition Streamlining Act of 1994 (Pub. L. 103–355) dated October 13, 1994, to implement the requirements for protests and disputes in Government procurement. The rule reflects the **Federal Register** publication at 60 FR 2630, January 10, 1995, concerning amendments made under FAR case 94–731, Ratification of Protest Costs, and should be read in conjunction with that case. This regulatory action was subject to Office of Management and Budget review under Executive Order 12866, dated September 30, 1993.

DATES: Comments should be submitted on or before May 22, 1995 to be considered in the formulation of a final rule.

ADDRESSES: Interested parties should submit written comments to: General Services Administration, FAR Secretariat (VRS), 18th & F Streets NW., Room 4037, Washington, DC 20405.

Please cite FAR Case 94–731 in all correspondence related to this case.

FOR FURTHER INFORMATION CONTACT: Mr. Craig Hodge, Protests/Disputes Team Leader at (703) 274–8940 in reference to this FAR case. For general information, contact the FAR Secretariat, Room 4037, GS Building, Washington, DC 20405, (202) 501–4755. Please cite FAR Case 94–731, Ratification of Protest Costs.

SUPPLEMENTARY INFORMATION:

A. Background

The Federal Acquisition Streamlining Act of 1994 (the Act), Pub. L. 103–355, provides authorities that streamline the acquisition process and minimize burdensome Government-unique requirements. Major changes that can be expected in the acquisition process as a result of implementing the Act include the areas of protests, disputes, and appeals.

This case presents proposed FAR amendments developed under FAR Case 94–731, Ratification of Protest Costs. Sections 1016, 1403, and 1435 of the Act provide that agencies may be required to pay protest and offer preparation costs to protesters under certain circumstances. Often as the result of discovery during a protest, misrepresentations may be detected that could not have been reasonably known to the agency's evaluators. A protest may be sustained where the award has been induced by a material misrepresentation by the awardee. Such situations often involve proposed ''key personnel.''

The agency is without effective remedy in such cases. Theoretically, the agency could ask the Department of Justice to file a lawsuit against the offeror making the misrepresentations. However, due to the heavy workload of the Justice attorneys, this is not a practical alternative. The proposed FAR change will not adversely affect any substantive right of an offeror. Under the proposed language, the Government remedy is to offset such costs on the same or an unrelated contract. If the offeror believes that the offset is not justified, it may appeal the action to the agency, or under the Contract Disputes Act to either a Board of Contract Appeals or the Court of Federal Claims.

In view of expected benefits to Government and industry from the Act, FAR implementation was formulated under an expedited process. The FAR Council is interested in an exchange of ideas and opinions with respect to the regulatory implementation of the Act. For that reason, the FAR Council is conducting a series of public meetings. However, the FAR Council has not scheduled a public meeting on this rule (FAR Case 94–731) because of the clarity and non-controversial nature of the rule. If the public believes such a meeting is needed with respect to this rule, a letter requesting a public meeting and outlining the nature of the requested meeting shall be submitted to and received by the FAR Secretariat (see **ADDRESSES** caption) on or before April 24, 1995.

The FAR Council will consider such requests in determining whether a public meeting on this rule should be scheduled.

B. Regulatory Flexibility Act

This proposed rule is not expected to have a significant economic impact on a substantial number of small entities within the meaning of the Regulatory Flexibility Act, 5 U.S.C. 601 *et seq.*, because the vast number of contracts do not involve protests where misrepresentation is detected through discovery. An Initial Regulatory Flexibility Analysis has, therefore, not been performed. Comments from small entities concerning the affected FAR subpart will be considered in accordance with 5 U.S.C. 610 of the Act. Such comments must be submitted separately and should cite 5 U.S.C. 601 *et seq.* (FAR Case 94–731), in correspondence.

C. Paperwork Reduction Act

The Paperwork Reduction Act does not apply because the proposed changes to the FAR do not impose recordkeeping or information collection requirements, or collections of information from offerors, contractors, or members of the public which require the approval of the Office of Management and Budget under 44 U.S.C. 3501 *et seq.*

List of Subjects in 48 CFR Parts 1, 32, 33, and 52

Government procurement.

Dated: March 16, 1995.

Edward C. Loeb,

Deputy Project Manager for the Implementation of the Federal Acquisition Streamlining Act of 1994.

Therefore, it is proposed that 48 CFR Parts 1, 32, 33 and 52 be amended as set forth below:

1. The authority citation for 48 CFR Parts 1, 32, 33 and 52 continues to read as follows:

Authority: 40 U.S.C. 486(c); 10 U.S.C. chapter 137; and 42 U.S.C. 2473(c).

PART 1—FEDERAL ACQUISITION REGULATION SYSTEM

2. Section 1.602–3 is amended by revising paragraph (c)(2) to read as follows:

1.602–3 Ratification of unauthorized commitments.

* * * * *

(c) * * *

(2) The ratifying official has the authority to enter into a contractual commitment.

* * * * *

PART 32—CONTRACT FINANCING

3. Section 32.602 is amended by adding paragraph (h) to read as follows:

32.602 General.

* * * * *

(h) Reimbursement of costs, as provided in 48 CFR (FAR) 33.102(b), 33.104(h)(1), and 33.105(g)(1), paid by the Government where a postaward

protest is sustained as a result of an awardee's misstatement, misrepresentation, or miscertification.

4. Section 32.603 is revised to read as follows:

32.603 Applicability.

Except as otherwise specified, this subpart applies to all debts to the Government arising in connection with contracts and subcontracts for the acquisition of supplies or services and debts arising from the Governments payment of costs, as provided in 48 CFR (FAR) 33.102(b), 33.104(h)(1), and 33.105(g)(1), where a postaward protest is sustained as a result of an awardee's misstatement, misrepresentation, or miscertification.

PART 33—PROTESTS, DISPUTES, AND APPEALS

5. Section 33.102 is amended by redesignating paragraphs (b) and (c) as (c) and (e), respectively, and adding new paragraphs (b) and (d); and revising newly designated paragraphs (e)(2) and (e)(3) to read as follows:

33.102 General.

* * * * *

(b) If in connection with a protest, the head of an agency determines that a solicitation, proposed award, or award does not comply with the requirements of law or regulation, the head of the agency may—

(1) Take any action that may have been taken by the Comptroller General in the event of a GAO protest; and

(2) Pay appropriate costs as stated in Section 33.104(h).

(3) Require the awardee to reimburse the Government's costs, as provided in this paragraph, where a postaward protest is sustained as the result of an awardees intentional or negligent misstatement, misrepresentation, or miscertification. In addition to any other remedy available, and pursuant to the requirements of 48 CFR (FAR) part 32, subpart 32.6, the Government may collect this debt by offsetting the amount against any payment due the awardee under any contract between the awardee and the Government.

* * * * *

(d) *Protest likely after award.* The contracting officer may stay performance of a contract within the time period contained in 33.104(c)(1) if the contracting officer makes a written determination that—

(1) A protest is likely to be filed; and

(2) Delay of performance is, under the circumstances, in the best interests of the United States.

(e) * * *

(2) May protest to the GAO in accordance with GAO regulations (4 CFR part 21). An interested party who has filed a protest regarding an ADP procurement with the GAO may not file a protest with the GSBCA with respect to that procurement.

(3) May protest to the GSBCA regarding an award of an ADP contract in accordance with GSBCA Rules of Procedure (48 CFR chapter 61). An interested party who has filed a protest regarding an ADP procurement with GSBCA (40 U.S.C. 759(f)) may not file a protest with the GAO with respect to that procurement.

6. Section 33.104 is amended by revising paragraph (h) to read as follows:

33.104 Protests to GAO.

* * * * *

(h) *Award of costs.* (1) If the GAO determines that a solicitation for a contract or a proposed award or an award of a contract does not comply with a statute or regulation, the GAO may recommend that the agency conducting the procurement pay to an appropriate interested party the direct cost, exclusive of profit, of filing and pursuing the protest, including reasonable attorney's fees and consultant and expert witness fees, and bid and proposal preparation costs.

(2) If the GAO recommends the award of costs to an interested party, the agency, in accordance with agency procedures, shall attempt to reach an agreement on the amount of the cost to be paid. If the agency and the interested party are unable to agree on the amount to be paid, GAO may, upon request of the interested party, recommend to the agency the amount of cost that the agency should pay.

(3) No agency shall pay a party, other than a small business concern within the meaning of section 3(a) of the Small Business Act (see 48 CFR (FAR) 19.001 definition, ''Small business concern''), costs under paragraph (h)(2) of this section—

(i) For consultant and expert witness fees that exceed the highest rate of compensation for expert witnesses paid by the Government; or

(ii) For attorneys' fees that exceed $150 per hour unless the agency determines, based on the recommendation of the Comptroller General on a case by case basis, that an increase in the cost of living or a special factor, such as the limited availability of qualified attorneys for the proceedings involved, justifies a higher fee. The cap placed on attorneys' fees for businesses, other than small businesses, constitutes a benchmark as to what constitutes a ''reasonable'' level for attorneys' fees for small businesses.

(4) A recommended award of costs may be paid by the agency out of funds available to or for the use of the agency for the acquisition of supplies or services. Before paying a recommended award of costs, agency personnel should consult legal counsel. Section 33.104(h) applies to all recommended awards of costs which have not yet been paid.

(5) If the GAO recommends the agency pay costs (as defined under paragraph (h)(1) of this section) and the agency does not promptly pay the costs, the agency shall promptly report to GAO the reasons for the failure to follow the GAO recommendation.

(6) Any costs the contractor receives under this section shall be excluded from all proposals, billings, or claims against the Government and such exclusions should be reflected in the cost agreement.

(7) If the Government pays costs, as provided in paragraph (h)(1) of this section, where a post award protest is sustained as the result of an awardees intentional or negligent misstatement, misrepresentation, or miscertification, the Government may require the awardee to reimburse the Government the amount of such costs. In addition to any other remedy available, and pursuant to the requirements of 48 CFR (FAR) part 32, subpart 32.6, the Government may collect this debt by offsetting the amount against any payment due the awardee under any contract between the awardee and the Government.

7. Section 33.105 is amended by—

(a) Redesignating paragraphs (f) and (g) as (g) and (h) and adding a new paragraph (f);

(b) By adding paragraphs (g)(3), (4), and (5); and

(c) By revising the new paragraph (h).

The revised text reads as follows:

33.105 Protests to GSBCA.

* * * * *

(f) Any agreement that provides for the dismissal of a protest and involves a direct or indirect expenditure of appropriated funds shall be made part of the public record (subject to any protective order considered appropriate by the Board) before dismissal of the protest. If an agency is party to a settlement agreement, the submission of the agreement to the Board shall include a memorandum, signed by the contracting officer concerned, that describes in detail the procurement, the grounds for protest, the Government's position regarding the grounds for protest, the terms of the settlement, and the agency's position regarding the

propriety of the award or proposed award of the contract at issue in the protest.

(g) * * *

(3) No agency shall pay a party, other than a small business concern within the meaning of section 3(a) of the Small Business Act (see 48 CFR (FAR) 19.001 definition, ''Small business concern''), costs under paragraph (g)(1) of this section—

(i) For consultant and expert witness fees that exceed the highest rate of compensation for expert witnesses paid by the Government; or

(ii) For attorneys' fees that exceed $150 per hour unless the Board determines, on a case by case basis, that an increase in the cost of living or a special factor, such as the limited availability of qualified attorneys for the proceedings involved, justifies a higher fee. The cap placed on attorneys' fees for businesses, other than small businesses, constitutes a benchmark as to what constitutes a ''reasonable'' level for attorneys' fees for small businesses.

(4) Within 30 days after receipt by the agency of an application for cost, the agency may file an answer.

(5) If the Government pays costs, as provided in paragraph (g)(1) of this section, where a post award protest is sustained as the result of an awardee's intentional or negligent misstatement, misrepresentation, or miscertification, the Government may require the awardee to reimburse the Government the amount of such costs. In addition to any other remedy available, and pursuant to the requirements of 48 CFR (FAR) part 32, subpart 32.6, the Government may collect this debt by offsetting the amount against any payment due the awardee under any contract between the awardee and the Government.

(h) The GSBCA's final decision may be appealed by the agency or by any interested party, including any intervening interested parties, as set forth in the Contract Disputes Act.

PART 52—SOLICITATION PROVISIONS AND CONTRACT CLAUSES

8. Section 52.233–3 is amended by revising the date of the clause; and by adding paragraph (f) to read as follows:

52.233–3 Protest after award.

* * * * *

Protest After Award (Date)

* * * * *

(f) If as the result of the awardee's intentional or negligent misstatement, misrepresentation, or miscertification, a protest related to this solicitation is sustained, and the Government pays costs, as provided in 48 CFR (FAR) 33.102(b)(2), 33.104(h)(1), or 33.105(g)(1), the Government may require the awardee to reimburse the Government the amount of such costs. In addition to any other remedy available, and pursuant to the requirements of 48 CFR (FAR) part 32, subpart 32.6, the Government may collect this debt by offsetting the amount against any payment due the awardee under any contract between the awardee and the Government.

(End of clause)

[FR Doc. 95–7097 Filed 3–22–95; 8:45 am]

BILLING CODE 6820–34–D

federal register

Thursday
March 23, 1995

Part X

The President

Proclamation 6778—To Amend the Generalized System of Preferences

Federal Register
Vol. 60, No. 56
Thursday, March 23, 1995

Presidential Documents

Title 3—

The President

Proclamation 6788 of March 17, 1995

To Amend the Generalized System of Preferences

By the President of the United States of America

A Proclamation

1. Pursuant to sections 501 and 502 of the Trade Act of 1974, as amended (''Trade Act'') (19 U.S.C. 2461 and 2462), and having due regard for the eligibility criteria set forth therein, I have determined that it is appropriate to designate the West Bank and Gaza Strip as a beneficiary of the Generalized System of Preferences (''GSP'').

2. Section 604 of the Trade Act (19 U.S.C. 2483) authorizes the President to embody in the Harmonized Tariff Schedule of the United States (''HTS'') the substance of the provisions of that Act, and of other acts affecting import treatment, and actions thereunder.

NOW, THEREFORE, I, WILLIAM J. CLINTON, President of the United States of America, acting under the authority vested in me by the Constitution and the laws of the United States, including but not limited to sections 501 and 604 of the Trade Act, do proclaim that:

(1) General note 4(a) to the HTS, listing those nonindependent territories whose products are eligible for benefits of the GSP, is modified by inserting ''West Bank and Gaza Strip'' in alphabetical order in the enumeration of nonindependent territories.

(2) Any provisions of previous proclamations and Executive orders inconsistent with the provisions of this proclamation are hereby superseded to the extent of such inconsistency.

(3) The extension of the Generalized System of Preferences program to the West Bank and Gaza Strip pursuant to this proclamation applies only to goods produced in the areas for which arrangements are being established for Palestinian Interim Self-Government, as set forth in Articles I, III, and IV of the Declaration of Principles on Interim Self-Government Arrangements.

(4) The modifications to the HTS made by paragraph (1) of this proclamation shall be effective with respect to articles that are: (i) imported on or after January 1, 1976, and (ii) entered, or withdrawn from warehouse for consumption, on or after 15 days after the date of publication of this proclamation in the **Federal Register.**

IN WITNESS WHEREOF, I have hereunto set my hand this seventeenth day of March, in the year of our Lord nineteen hundred and ninety-five, and of the Independence of the United States of America the two hundred and nineteenth.

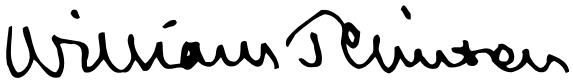

[FR Doc. 95–7398
Filed 3-21-95; 4:40 pm]
Billing code 3195–01–P

Reader Aids

Federal Register

Vol. 60, No. 56

Thursday, March 23, 1995

INFORMATION AND ASSISTANCE

Federal Register

Index, finding aids & general information	**202–523–5227**
Public inspection announcement line	**523–5215**
Corrections to published documents	**523–5237**
Document drafting information	**523–3187**
Machine readable documents	**523–4534**

Code of Federal Regulations

Index, finding aids & general information	**523–5227**
Printing schedules	**523–3419**

Laws

Public Laws Update Service (numbers, dates, etc.)	**523–6641**
Additional information	**523–5230**

Presidential Documents

Executive orders and proclamations	**523–5230**
Public Papers of the Presidents	**523–5230**
Weekly Compilation of Presidential Documents	**523–5230**

The United States Government Manual

General information	**523–5230**

Other Services

Data base and machine readable specifications	**523–4534**
Guide to Record Retention Requirements	**523–3187**
Legal staff	**523–4534**
Privacy Act Compilation	**523–3187**
Public Laws Update Service (PLUS)	**523–6641**
TDD for the hearing impaired	**523–5229**

ELECTRONIC BULLETIN BOARD

Free **Electronic Bulletin Board** service for Public Law numbers, Federal Register finding aids, and list of documents on public inspection. **202–275–0920**

FAX-ON-DEMAND

You may access our Fax-On-Demand service. You only need a fax machine and there is no charge for the service except for long distance telephone charges the user may incur. The list of documents on public inspection and the daily Federal Register's table of contents are available using this service. The document numbers are 7050-Public Inspection list and 7051-Table of Contents list. The public inspection list will be updated immediately for documents filed on an emergency basis.

NOTE: YOU WILL ONLY GET A LISTING OF DOCUMENTS ON FILE AND NOT THE ACTUAL DOCUMENT. Documents on public inspection may be viewed and copied in our office located at 800 North Capitol Street, N.W., Suite 700. The Fax-On-Demand telephone number is: **301–713–6905**

FEDERAL REGISTER PAGES AND DATES, MARCH

11017–11608.....1
11609–11896.....2
11897–12102.....3
12103–12394.....6
12395–12658.....7
12659–12858.....8
12859–13022.....9
13023–13366.....10
13367–13612.....13
13613–13888.....14
13889–14200.....15
14201–14350.....16
14351–14616.....17
14617–14890.....20
14891–15026.....21
15027–15228.....22
15229–15456.....23

CFR PARTS AFFECTED DURING MARCH

At the end of each month, the Office of the Federal Register publishes separately a List of CFR Sections Affected (LSA), which lists parts and sections affected by documents published since the revision date of each title.

3 CFR

Proclamations:
6772.....11609
6773.....12101
6774.....12657
6775.....13887
6776.....13889
6777.....14351
6778.....15455

Executive Orders:
November 24, 1916 (Revoked in part by PLO 7121).....12886
12903 (Superseded by EO 12955).....13365
12954.....13023
12955.....13365
12956.....14199
12957.....14615

Administrative Orders:
Memorandums:
March 2, 1995 12393
Presidential Determinations:
No. 95–15 of February 28, 1995.....12859
No. 95–16 of March 13, 1995.....15227

5 CFR

Ch. LXXVII.....12396
362.....11017
532.....12395, 12396
582.....13027
731.....13613
831.....14201
842.....14201
843.....13034
1300.....12396
1650.....13604
1653.....13604

Proposed Rules:
Ch. XIV 11057
890.....15074

7 CFR

29 .....12398, 12399, 12400, 13515
51.....11242
56.....12401, 13780
58.....11246
300.....14202
319.....14202
354.....11897
372.....13212
906.....13891
916.....14891
917.....14891
989.....12403
1209.....13613
1210.....13515
1220.....15027
1942.....11019

Proposed Rules:
51.....11918, 13926
58 .....11919, 12154, 12156
201.....15257
319.....13382
360.....15260
800.....15075
810.....15075
927.....14914
945.....13080
1050.....15262
1099.....12907
1220.....15082
1230.....13384
1940.....13650, 13928

8 CFR

204.....14353
211.....14353
235.....14353
251.....14353
252.....14353
274a.....14353
299.....14353
316.....14353
334.....14353

9 CFR

2.....13893
75.....14617
77.....11898
91.....13896
92.....13896, 13898
101.....14353
113 .....14353, 14355, 14357
317.....12883
381.....12883

Proposed Rules:
1.....12908
3.....12908
92.....13929
101.....14392
102.....12159, 12162
104.....12159
105.....12159
112.....14392
114.....12162
116.....12159
160.....13084
161.....13084
381.....14668

10 CFR

50.....13615
55.....13615
73.....13615
430.....15015
765.....15015
766.....15015
1003.....15004

Proposed Rules:
20.....13385

50 14669
60 ....15180, 15190
170 14670
171 14670
430 15330
490 15020

12 CFR

205 15032
543 12103
552 12103
571 12103
708a 12759
Proposed Rules:
7 11924
31 11924
543 13008
552 13008
571 13008
722 13388

13 CFR

Proposed Rules:
120 11941
122 11941

14 CFR

11 ....12034, 12108
25 11194
39 ....11020, 11611, 11613, 11615, 11617, 11619, 11621, 11623, 12406, 12407, 12408, 12410, 12411, 12413, 12414, 12663, 12666, 13618, 13620, 13621, 13623, 13624, 14619, 14897, 15034, 15035, 15037
61 11254
71 ....11625, 12108, 12667, 13626, 13900, 14363
73 15229
91 13627
95 13035
97 ....12109, 12110, 14363, 14365
121 ....11194, 12034
135 ....11194, 13010
1241 11022
1262 12668
Proposed Rules:
23 14698
33 12360
39 ....11635, 11637, 11942, 11944, 11945, 12714, 14231, 14233, 14235, 14237, 14395, 15084
71 ....11057, 13931, 14238, 14240, 14397
121 ....13008, 13862
125 13862
135 13862
150 14701

15 CFR

925 12592
2012 15229
Proposed Rules:
905 11947
944 14241

16 CFR

305 ....14209, 15198
1203 15231
Proposed Rules:
305 15200
1700 12165

17 CFR

1 13901
200 14622
239 11876
240 14366
270 ....11876, 11887, 14622
274 11876
400 11022
401 11022
402 ....11022, 12825
403 11022
404 11022
405 11022
450 11022
Proposed Rules:
239 11890
270 11890
274 11890

18 CFR

11 15040
381 15040
Proposed Rules:
154 13651
158 13651
201 13651
250 13651
284 13651

19 CFR

10 14630
12 ....13352, 14486
101 14211
Proposed Rules:
134 14705

20 CFR

416 14215
Proposed Rules:
200 11639
335 14241
404 12166
416 12166

21 CFR

173 11899
179 12669
328 13590
450 11026
510 ....11027, 14216
520 ....14216, 14217
522 14217
558 ....11027, 11028
Proposed Rules:
101 14918
111 14918
170 14918
310 ....13014, 14918
314 13014

23 CFR

658 15212

24 CFR

15 11901
25 13834
58 13518
92 13348
200 ....14632, 14816
201 ....13834, 13854
202 13834
215 14816
235 14816
236 14816
243 11828
247 14816
290 11844
760 ....11828, 14632
812 14816
813 11626
850 14816
880 14816
881 14816
882 14816
883 14816
884 14816
886 ....11844, 14816
887 14816
888 12594
889 11828
890 ....11836, 13515
900 14816
904 14816
905 ....11626, 14816
908 11626
912 14816
913 11626
960 14816
3500 ....11194, 14635
Proposed Rules:
Chapter IX 14707
100 ....13840, 14890
888 11870

25 CFR

Proposed Rules:
Ch. I 14582

26 CFR

1 ....11028, 11906, 12415, 14636
Proposed Rules:
1 ....11059, 11060, 11195, 11950, 12034, 13213, 13393

28 CFR

0 11906
31 13330
40 13902

29 CFR

500 15232
1910 ....11194, 13782
1915 ....11194, 13782, 14218
1917 13782
1918 13782
1926 11194
1952 ....12416, 12417
2509 12328
2619 13904
2676 13904
Proposed Rules:
1910 15263
1915 15263
1926 15263
1952 12488

30 CFR

914 13038
936 13040
944 13367
950 14368
Proposed Rules:
Ch. II 14707
Ch. VII 13858
254 13652
756 13086
773 13087
904 14399
925 11640
926 13932
935 ....14400, 14401
944 13935

31 CFR

351 15430
356 13906
500 12885

32 CFR

199 12419
1636 13907
Proposed Rules:
199 ....12717, 14403, 14919
209 11642
311 13936
855 15086

33 CFR

100 ....11629, 15049, 15052
110 ....14220, 15052
117 ....13629, 14221
143 13550
155 13318
157 13318
165 ....12112, 15049, 15053
334 15232
Proposed Rules:
117 ....12178, 13393, 13395, 13653
165 ....14242, 14243, 14245, 14246, 15101, 15102
320 13654
325 13654
333 13654
402 11643

34 CFR

3 11907
75 ....12096, 12648
280 14864
607 15446

36 CFR

7 13629
1230 13908
Proposed Rules:
7 13662

37 CFR

1 14488

38 CFR

3 ....12886, 14222

39 CFR

20 14370
3001 ....12113, 12116
Proposed Rules:
20 14878
111 12490

40 CFR

9 ....12670, 15366
52 ....12121, 12123, 12125, 12438, 12442, 12446, 12451, 12453, 12459, 12685, 12688, 12691, 12695, 12700, 13042, 13631, 13634, 13908, 14899, 15053, 15056, 15061, 15062, 15233, 15235, 15241
58 11907
61 13912
63 ....11029, 12670, 13045
70 ....12128, 12478, 13046,

15066
81 .....12453, 12459, 13368, 13634
82.....14608
86.....15242
122.....15366
123.....15366
131.....15366
132.....15366
180 .....11029, 11032, 12702, 12703, 12704, 12705, 12707, 13914, 15069
281 .....12630, 12709, 14334, 14371, 14372
282.....12630, 14334
300 .....14641, 14645, 15247
372.....13047
721.....11033
799.....14910
Proposed Rules:
Ch. I 15264
22.....15208
50.....13663
51.....12492
52 .....12180, 12184, 12185, 12519, 12520, 12721, 12722, 13937, 14708, 14920, 15104, 15269, 15270, 15271
53.....13663
58.....12492
60.....13937
61.....13938
63 .....12723, 13088, 13664
68.....13526
70 .....12521, 13088, 13683, 14921, 15105
81.....12520
82.....14611
85.....12185
123.....14588
148.....11702
180 .....13938, 13939, 13941, 15109, 15111, 15113
185.....15113
186.....15113
194.....11060
261.....12525
266.....11702
268.....11702
271.....11702, 12525
300.....13944, 15273
302.....12525
761.....13095

42 CFR

410.....14223
485.....11632
486.....11632
Proposed Rules:
65a.....12525

43 CFR

2720.....12710
Public Land Orders:
7100.....12592
7117.....11045
7118.....11046
7119.....11633
7120.....11633
7121.....12886
7122.....12887
7123.....12887
7124.....13915
7125.....15248

44 CFR

64.....15071
65.....13049
67.....13050
152.....11236
Proposed Rules:
61.....13945
65.....14708
67.....13096, 14710
206.....13945

45 CFR

2543.....13055
Proposed Rules:
1180.....12186

46 CFR

2.....13550
30.....13318
32.....13318
70.....13318
90.....13318
172.....13318
Proposed Rules:
4.....15115
5.....15115
10.....13570
12.....13570
67.....12188

47 CFR

1.....13636
2.....13071, 15248
5.....13636
15.....13071
24.....13915
32.....12137
36.....12137
61.....13637
65.....12137
73 .....11909, 11910, 11911, 13918, 15255
74.....14224
76.....14373
90.....15248
Proposed Rules:
Ch. I 13102
1.....13396, 15275
2 .....11644, 13687, 15116
15.....15116
63.....11644, 15118
64.....12529
73 .....12530, 12724, 12725, 13947, 15275

48 CFR

2 .....12366, 12384, 13397
3.....12366, 13397
4.....12366, 12384
5 .....12366, 12384, 13397
6.....12366, 13397
7.....12384, 13397
8.....12366, 12384
9 .....12366, 12384, 13397
10.....13397
11.....13397
12.....12384, 13397
13.....12366, 13397
14.....12384, 13397
15 .....12366, 12384, 13397
16 .....12366, 12384, 13397
22 .....12366, 13397, 14377
23.....12366, 13397
25.....12366
27.....12366
28.....12366
29.....12366
32.....12366, 12384
36.....12366, 13397
41.....12366
42.....12366, 13397
43.....12366
44.....12366, 13397
45.....12366, 12384
46.....12366, 13397
47.....12366, 13397
49.....12366, 13397
52 .....12366, 12384, 13397, 14377
53 .....12366, 12384, 13397
209.....13073
219.....13074
223.....13075
235.....13076
252.....13073, 13075
701.....11911, 12825
703.....11911, 12825
715.....11911, 12825
724.....11911
731.....11911, 12825
752.....11911, 12825
927.....11812
952.....11812
970.....11812
1517.....12712
1805.....14378
1837.....11634
Ch. 99 12711
Proposed Rules:
Ch. I 11198
1.....14340, 15450
6.....14346
7.....14340
12.....15220
16.....14346
17.....14340
32.....14156, 15450
33.....15450
37.....14340
45.....12530
49.....14340
52 .....12530, 14156, 14340, 14346, 15220, 15450
245.....15276
252.....15276
933.....11646
970.....11646
9904.....12725

49 CFR

1 .....11046, 13639, 14225
107.....12139
192.....14379, 14646
195.....14646
218.....11047
382.....13369
391.....13369
393.....12146
564.....14226
571 .....11913, 13216, 13286, 13297, 13639
575.....11913
583.....14228
653.....12296
654.....12296, 12298
661.....14174
1312.....13077
1314.....13077
Proposed Rules:
Ch. V 14717, 15119
192.....14714
195.....14714
234.....11649
393.....13306
564.....14247
571 .....12192, 13688, 14247
661.....14178
800.....13948
830.....13948
831.....13948

50 CFR

17.....12483, 12887
204.....11050
280.....14381
285.....14381
301.....14651
611.....13780
625.....14230
646.....12592
651.....13078
654.....13918
663.....13377
672 .....11915, 12149, 12152, 13079, 14390, 14912, 15072
673.....11054, 12825
675 .....11915, 12149, 12487, 13780, 14390, 14912
676 .....11916, 12152, 13780
681.....13380
Proposed Rules:
14.....15277
17 .....11768, 12531, 12728, 12730, 13105, 13397, 13950, 14253, 14410, 15280, 15281
18.....14408
20.....14194
222.....11951, 14410
227.....14253
649.....14261
663.....11062
672.....13106
675.....13106