1–26–95
Vol. 60 No. 17
Pages 5087–5308

federal register

Thursday
January 26, 1995

FEDERAL REGISTER Published daily, Monday through Friday, (not published on Saturdays, Sundays, or on official holidays), by the Office of the Federal Register, National Archives and Records Administration, Washington, DC 20408, under the Federal Register Act (49 Stat. 500, as amended; 44 U.S.C. Ch. 15) and the regulations of the Administrative Committee of the Federal Register (1 CFR Ch. I). Distribution is made only by the Superintendent of Documents, U.S. Government Printing Office, Washington, DC 20402.

The **Federal Register** provides a uniform system for making available to the public regulations and legal notices issued by Federal agencies. These include Presidential proclamations and Executive Orders and Federal agency documents having general applicability and legal effect, documents required to be published by act of Congress and other Federal agency documents of public interest. Documents are on file for public inspection in the Office of the Federal Register the day before they are published, unless earlier filing is requested by the issuing agency.

The seal of the National Archives and Records Administration authenticates this issue of the **Federal Register** as the official serial publication established under the Federal Register Act. 44 U.S.C. 1507 provides that the contents of the **Federal Register** shall be judicially noticed.

The **Federal Register** is published in paper, 24x microfiche and as an online database through *GPO Access,* a service of the U.S. Government Printing Office. The online database is updated by 6 a.m. each day the **Federal Register** is published. The database includes both text and graphics from Volume 59, Number 1 (January 2, 1994) forward. It is available on a Wide Area Information Server (WAIS) through the Internet and via asynchronous dial-in. The annual subscription fee for a single workstation is $375. Six-month subscriptions are available for $200 and one month of access can be purchased for $35. Discounts are available for multiple-workstation subscriptions. To subscribe, Internet users should telnet to swais.access.gpo.gov and login as newuser (all lower case); no password is required. Dial-in users should use communications software and modem to call (202) 512–1661 and login as swais (all lower case); no password is required; at the second login prompt, login as newuser (all lower case); no password is required. Follow the instructions on the screen to register for a subscription for the **Federal Register** Online via *GPO Access.* For assistance, contact the *GPO Access* User Support Team by sending Internet e-mail to help@eids05.eids.gpo.gov, or a fax to (202) 512–1262, or by calling (202) 512–1530 between 7 a.m. and 5 p.m. Eastern time, Monday through Friday, except Federal holidays.

The annual subscription price for the **Federal Register** paper edition is $494, or $544 for a combined **Federal Register**, Federal Register Index and List of CFR Sections Affected (LSA) subscription; the microfiche edition of the **Federal Register** including the Federal Register Index and LSA is $433. Six month subscriptions are available for one-half the annual rate. The charge for individual copies in paper form is $8.00 for each issue, or $8.00 for each group of pages as actually bound; or $1.50 for each issue in microfiche form. All prices include regular domestic postage and handling. International customers please add 25% for foreign handling. Remit check or money order, made payable to the Superintendent of Documents, or charge to your GPO Deposit Account, VISA or MasterCard. Mail to: New Orders, Superintendent of Documents, P.O. Box 371954, Pittsburgh, PA 15250–7954.

There are no restrictions on the republication of material appearing in the **Federal Register.**

How To Cite This Publication: Use the volume number and the page number. Example: 60 FR 12345.

SUBSCRIPTIONS AND COPIES

PUBLIC

Subscriptions:

Paper or fiche	**202–512–1800**
Assistance with public subscriptions	**512–1806**

Online:

Telnet swais.access.gpo.gov, login as newuser <enter>, no password <enter>; or use a modem to call (202) 512–1661, login as swais, no password <enter>, at the second login as newuser <enter>, no password <enter>.

Assistance with online subscriptions	**202–512–1530**

Single copies/back copies:

Paper or fiche	**512–1800**
Assistance with public single copies	**512–1803**

FEDERAL AGENCIES

Subscriptions:

Paper or fiche	**523–5243**
Assistance with Federal agency subscriptions	**523–5243**

For other telephone numbers, see the Reader Aids section at the end of this issue.

Printed on recycled paper containing 100% post consumer waste

Contents

Federal Register

Vol. 60, No. 17

Thursday, January 26, 1995

Agriculture Department
See Animal and Plant Health Inspection Service
See Consolidated Farm Service Agency
See Forest Service
See Natural Resources Conservation Service
See Rural Utilities Service

Animal and Plant Health Inspection Service
RULES
Exportation and importation of animals and animal products:
Horses from Mexico; quarantine requirements, 5127–5128
Plant-related quarantine, domestic:
Mexican fruit fly, 5087
PROPOSED RULES
Plant pests; introduction of nonidigenous organisms; hearings, 5288–5307

Antitrust Division
NOTICES
Competitive impact statements and proposed consent judgments:
El Paso Natural Gas Co., 5217–5226
Vision Service Plan, 5210–5217

Army Department
See Engineers Corps
NOTICES
Meetings:
Science Board, 5169

Children and Families Administration
NOTICES
Agency information collection activities under OMB review, 5184

Civil Rights Commission
NOTICES
Meetings; State advisory committees:
District of Columbia, 5164–5165

Commerce Department
See Foreign-Trade Zones Board
See International Trade Administration
See National Oceanic and Atmospheric Administration

Consolidated Farm Service Agency
RULES
North American Free Trade Agreement (NAFTA):
End-use certificate program, 5087–5096

Defense Department
See Army Department
See Engineers Corps
See Navy Department
RULES
Archaeological resources protection; uniform regulations, 5256–5261

Education Department
NOTICES
Grants and cooperative agreements; availability, etc.:
Urban community service program; urban grant institution designation, 5170–5171

Energy Department
See Federal Energy Regulatory Commission

Engineers Corps
RULES
Ability to pay provision; flood control cost-sharing requirements, 5133–5134

Environmental Protection Agency
RULES
Air quality implementation plans; approval and promulgation; various States:
District of Columbia, 5134–5136
North Carolina, 5136–5138
Toxic substances:
Testing requirements—
Glycidyl methacrylate, 5138–5141
PROPOSED RULES
Air quality implementation plans; approval and promulgation; various States:
North Carolina, 5155
Pesticides; tolerances in food, animal feeds, and raw agricultural commodities:
Urea-formaldehyde copolymer, 5155–5157
NOTICES
Superfund; response and remedial actions, proposed settlements, etc.:
Bell Landfill Site, PA, 5177–5178

Farm Service Agency
See Consolidated Farm Service Agency

Federal Aviation Administration
NOTICES
Advisory circulars; availability, etc.:
Aircraft—
Government operations; public aircraft definition, 5237–5246

Federal Communications Commission
PROPOSED RULES
Radio stations; table of assignments:
California, 5158–5159
Kentucky, 5159
Michigan, 5157
Missouri, 5158
Nevada, 5158
Virgin Islands, 5157–5158

Federal Election Commission
NOTICES
Meetings; Sunshine Act, 5251

Federal Energy Regulatory Commission
NOTICES
Electric rate and corporate regulation filings:
Northern States Power Co. et al., 5173–5174

Environmental statements; availability, etc.:
Comtu Falls Associates, 5174
Natural gas certificate filings:
Natural Gas Pipeline Co. of America et al., 5175–5177
Tuscarora Gas Transmission Co. et al., 5174–5175
Applications, hearings, determinations, etc.:
Alabama-Tennessee Natural Gas Co., 5171–5172
Algonquin Gas Transmission Co., 5173
Algonquin LNG, Inc., 5171
Arkansas Oklahoma Gas Corp., 5172
CNG Transmission Corp., 5172–5173
Great Lakes Gas Transmission L.P., 5172
Northern Natural Gas Co., 5172
Viking Gas Transmission Co., 5171

Federal Maritime Commission
NOTICES
Casualty and nonperformance certificates:
Royal Cruise Line Ltd. et al., 5178
Starlauro S.p.A. et al., 5178

Federal Reserve System
RULES
Truth in Savings (Regulation DD):
Annual percentage yield calculation, 5128–5131
PROPOSED RULES
Truth in Savings (Regulation DD):
Annual percentage yield calculation, 5142–5152
NOTICES
Applications, hearings, determinations, etc.:
CFX Corp. et al., 5179
First Union Corp. et al., 5179–5180
Gillmor Financial Services, Inc., 5180–5181
Lakeview Financial Corp. et al., 5179
Premier Financial Bancorp, Inc., 5178–5179
Wangensteen, John P., et al., 5181

Federal Trade Commission
NOTICES
Premerger notification waiting periods; early terminations, 5181–5184

Fish and Wildlife Service
RULES
Endangered and threatened species:
Hine's emerald dragonfly, 5267–5273
Saint Francis' satyr butterfly, 5264–5267
Hunting and fishing:
Open areas list additions, 5276–5277
PROPOSED RULES
Endangered and threatened species:
Brother's Island tuatara, 5159–5162
NOTICES
Endangered and threatened species permit applications, 5207–5208

Food and Drug Administration
RULES
Color additives:
FD&C Yellow No. 5, etc., 5131
PROPOSED RULES
Medical devices:
Mammography facilities; quality standards and certification requirements, 5152
NOTICES
Food additive petitions:
Goodyear Tire & Rubber Co., 5184
Human drugs:
Patent extension; regulatory review period determinations—
Netrexin; correction, 5252

Foreign-Trade Zones Board
NOTICES
Applications, hearings, determinations, etc.:
Oregon, 5165

Forest Service
RULES
Archaeological resources protection; uniform regulations, 5256–5261

Geological Survey
NOTICES
Northern Nevada; buried gold deposits and ground-water systems; hydrogeochemical studies; contribution acceptance from Pinson Mining Co., 5208

Health and Human Services Department
See Children and Families Administration
See Food and Drug Administration
See Health Care Financing Administration
See National Institutes of Health

Health Care Financing Administration
NOTICES
Medicare:
Ambulatory surgical centers; covered surgical procedures; list additions and deletions, 5185–5204

Housing and Urban Development Department
RULES
Low income housing:
Drug elimination program, 5280–5286

Interior Department
See Fish and Wildlife Service
See Geological Survey
See Land Management Bureau
RULES
Archaeological resources protection; uniform regulations, 5256–5261

International Trade Administration
NOTICES
Countervailing duties:
Textile mill products from—
Mexico, 5166–5168
Applications, hearings, determinations, etc.:
University of—
California, Berkeley, et al., 5165
Hawaii et al., 5165–5166

Interstate Commerce Commission
NOTICES
Railroad services abandonment:
Winchester & Western Railroad Co., 5208–5209

Justice Department
See Antitrust Division
PROPOSED RULES
Violent Crime Control and Law Enforcement Act; implementation:
Drug courts, 5152–5155
NOTICES
Pollution control; consent judgments:
Alaskan Battery Enterprises, Inc., 5209–5210

Caribbean Petroleum Corp., 5209
Masonite Corp., 5209

Labor Department
See Occupational Safety and Health Administration

Land Management Bureau
NOTICES
Closure of public lands:
California, 5205
Colorado, 5205
Realty actions; sales, leases, etc.:
California, 5205–5206
Survey plat filings:
Idaho, 5206
Withdrawal and reservation of lands:
Montana, 5206
Oregon, 5206–5207
Wyoming, 5207

National Aeronautics and Space Administration
NOTICES
Meetings:
Aerospace Safety Advisory Panel, 5226

National Highway Traffic Safety Administration
NOTICES
Motor vehicle safety standards:
Nonconforming vehicles—
Importation eligibility; determinations, 5246–5247

National Institutes of Health
NOTICES
Meetings:
Research Grants Division special emphasis panels, 5204–5205

National Oceanic and Atmospheric Administration
PROPOSED RULES
Fishery conservation and management:
Atlantic mackerel, squid, and butterfish, 5162–5163

National Science Foundation
NOTICES
Meetings:
Bioengineering and Environmental Systems Special Emphasis Panel, 5226
Chemistry Special Emphasis Panel, 5227
Computer and Information Science and Engineering Advisory Committee, 5227–5228,
Design, Manufacture, and Industrial Innovation Special Emphasis Panel, 5226
Electrical and Communications Systems Special Emphasis Panel, 5226
Engineering Advisory Committee, 5227
Human Resource Development Special Emphasis Panel, 5227, 5228
Physics Special Emphasis Panel, 5227, 5228

Natural Resources Conservation Service
NOTICES
Environmental statements; availability, etc.:
Nolan River Watershed, TX, 5164
Watershed projects; deauthorization of funds:
East Walker Watershed, NV, 5164

Navy Department
NOTICES
Environmental statements; availability, etc.:
Base realignment and closure—
Naval Air Warfare Center Aircraft Division, Patuxent River, MD, 5169–5170
Meetings:
Chief of Naval Operations Executive Panel, 5170

Nuclear Regulatory Commission
NOTICES
Petitions; Director's decisions:
Reactor licensees with installed Thermo-Lag fire barrier material, 5229
Applications, hearings, determinations, etc.:
Omaha Veterans Administration Medical Center, 5228–5229

Occupational Safety and Health Administration
RULES
Construction safety and heath standards:
Fall protection, 5131–5133

Personnel Management Office
RULES
Absence and leave:
Use and recredit of sick leave for Federal employees; correction, 5252

Public Health Service
See Food and Drug Administration
See National Institutes of Health

Rural Utilities Service
RULES
Telecommunications standards and specifications:
Copper and fiber optic cable splicing, 5096–5127

Securities and Exchange Commission
NOTICES
Agency information collection activities under OMB review, 5229
Self-regulatory organizations; proposed rule changes:
American Stock Exchange, Inc., 5231–5233, 5236–5237
Boston Stock Exchange, Inc., et al.; correction, 5252–5253
Chicago Board Options Exchange, Inc., 5233–5235
Midwest Securities Trust Co., 5235–5236
New York Stock Exchange, Inc.; correction, 5252
Pacific Stock Exchange, Inc.; correction, 5252
Applications, hearings, determinations, etc.:
Beta Well Service Inc., 5230
Diagnostic Health Service, Inc., 5230
Spartech Corp., 5229–5230

Tennessee Valley Authority
RULES
Archaeological resources protection; uniform regulations, 5256–5261

Transportation Department
See Federal Aviation Administration
See National Highway Traffic Safety Administration

United States Information Agency
NOTICES
Grants and cooperative agreements; availability, etc.:
Central and Eastern European graduate fellowships, 5247–5250

Veterans Affairs Department
NOTICES
Loan guaranty:
Percentage to determine net value, 5250

Separate Parts In This Issue

Part II
Tennessee Valley Authority; Department of Defense; Department of Agriculture, Forest Service; Department of the Interior, 5256–5261

Part III
Department of the Interior, Fish and Wildlife Service, 5264–5273

Part IV
Department of the Interior, Fish and Wildlife Service, 5276–5277

Part V
Department of Housing and Urban Development, Office of the Secretary, 5280–5286

Part VI
Department of Agriculture, Animal and Plant Health Inspection Service, 5288–5307

Reader Aids
Additional information, including a list of public laws, telephone numbers, and finding aids, appears in the Reader Aids section at the end of this issue.

Electronic Bulletin Board
Free **Electronic Bulletin Board** service for Public Law numbers, **Federal Register** finding aids, and a list of documents on public inspection is available on 202–275–1538 or 275–0920.

CFR PARTS AFFECTED IN THIS ISSUE

A cumulative list of the parts affected this month can be found in the Reader Aids section at the end of this issue.

5 CFR
630 5252

7 CFR
301 5087
782 5087
1755 5096

Proposed Rules:
335 5289

9 CFR
92 5127

12 CFR
230 5128

Proposed Rules:
230 5142

18 CFR
1312 5256

21 CFR
74 5131
201 5131

Proposed Rules:
Ch. I 5152

24 CFR
261 5280

28 CFR

Proposed Rules:
93 5152

29 CFR
1926 5131

32 CFR
229 5256

33 CFR
241 5133

36 CFR
296 5256

40 CFR
52 (2 documents) 5134, 5136
799 5138

Proposed Rules:
52 5155
180 5155

43 CFR
7 5256

47 CFR

Proposed Rules:
73 (6 documents) ... 5157, 5158, 5159

50 CFR
17 (2 documents) 5264, 5267
32 5276

Proposed Rules:
17 5159
655 5162

Rules and Regulations

Federal Register
Vol. 60, No. 17
Thursday, January 26, 1995

This section of the FEDERAL REGISTER contains regulatory documents having general applicability and legal effect, most of which are keyed to and codified in the Code of Federal Regulations, which is published under 50 titles pursuant to 44 U.S.C. 1510.

The Code of Federal Regulations is sold by the Superintendent of Documents. Prices of new books are listed in the first FEDERAL REGISTER issue of each week.

DEPARTMENT OF AGRICULTURE

Animal and Plant Health Inspection Service

7 CFR Part 301

[Docket No. 93–157–3]

Mexican Fruit Fly Regulations; Removal of Regulated Area

AGENCY: Animal and Plant Health Inspection Service, USDA.

ACTION: Affirmation of interim rule as final rule.

SUMMARY: We are adopting as a final rule, without change, an interim rule that amended the regulations by removing the quarantined portion of Los Angeles County, CA, from the list of areas regulated because of the Mexican fruit fly, and by removing California from the list of States quarantined because of the Mexican fruit fly. We have determined that the Mexican fruit fly has been eradicated from California and that restrictions on the interstate movement of regulated articles from California are no longer necessary to prevent the spread of the Mexican fruit fly into noninfested areas of the United States. The interim rule was necessary to relieve unnecessary restrictions on the interstate movement of regulated articles from the previously regulated area.

EFFECTIVE DATE: February 27, 1995.

FOR FURTHER INFORMATION CONTACT: Mr. Michael B. Stefan, Operations Officer, Domestic and Emergency Operations, Plant Protection and Quarantine, APHIS, USDA, P.O. Drawer 810, Riverdale, MD 20738. The telephone number for the agency contact will change when agency offices in Hyattsville, MD, move to Riverdale, MD, during February. Telephone: (301) 436–8247 (Hyattsville); (301) 734–8247 (Riverdale).

SUPPLEMENTARY INFORMATION:

Background

In an interim rule effective October 7, 1994, and published in the **Federal Register** on October 13, 1994 (59 FR 51839–51840, Docket No. 93–157–2), we amended the regulations in 7 CFR part 301 by removing the quarantined portion of Los Angeles County, CA, from the list of areas regulated because of the Mexican fruit fly in § 301.64–3(c), and by removing California from the list of States quarantined because of the Mexican fruit fly in § 301.64(a).

Comments on the interim rule were required to be received on or before December 12, 1994. We did not receive any comments. The facts presented in the interim rule still provide a basis for the rule.

This action also affirms the information contained in the interim rule concerning Executive Order 12866 and the Regulatory Flexibility Act, Executive Orders 12372 and 12778, and the Paperwork Reduction Act.

Further, for this action, the Office of Management and Budget has waived the review process required by Executive Order 12866.

List of Subjects in 7 CFR Part 301

Agricultural commodities, Plant diseases and pests, Quarantine, Reporting and recordkeeping requirements, Transportation.

PART 301—DOMESTIC QUARANTINE NOTICES

Accordingly, we are adopting as a final rule, without change, the interim rule that amended 7 CFR 301.64 and 301.64–3 and that was published at 59 FR 51839–51840 on October 13, 1994.

Authority: 7 U.S.C. 150bb, 150dd, 150ee, 150ff, 161, 162, and 164–167; 7 CFR 2.17, 2.51, and 371.2(c).

Done in Washington, DC, this 20th day of January 1995.

Terry L. Medley,

Acting Administrator, Animal and Plant Health Inspection Service.

[FR Doc. 95–1977 Filed 1–25–95; 8:45 am]

BILLING CODE 3410–34–P

Consolidated Farm Service Agency

7 CFR Part 782

RIN 0560–AD77

End-Use Certificate Program

AGENCY: Consolidated Farm Service Agency, USDA.

ACTION: Final rule.

SUMMARY: Pursuant to section 321(f) of the North American Free Trade Agreement Implementation Act (the Act), a proposed rule was published on October 20, 1994 with respect to the implementation of an end-use certificate program for wheat and barley imported from any foreign country or instrumentality that as of April 8, 1994, required end-use certificates for imports of U.S.-produced wheat and barley, respectively. This final rule adopts provisions of the proposed rule, with the exception of changes that were made based on comments received in response to the proposed rule. The major changes are further discussed in the Summary of Comments portion of this final rule. Accordingly, this final rule sets forth the policies and procedures that the Consolidated Farm Service Agency (CFSA), formerly the Agricultural Stabilization and Conservation Service (ASCS), will use to implement this end-use certificate program.

EFFECTIVE DATE: February 27, 1995.

FOR FURTHER INFORMATION CONTACT: Deputy Administrator, Commodity Operations, Consolidated Farm Service Agency, United States Department of Agriculture, P.O. Box 2415, Washington, DC 20013–2415.

SUPPLEMENTARY INFORMATION:

Executive Order 12866

This final rule has been determined to be significant and was reviewed by the Office of Management and Budget (OMB) under Executive Order 12866.

Executive Order 12778

This final rule has been reviewed in accordance with Executive Order 12778. The provisions of this final rule do not preempt State laws, are not retroactive, and do not involve administrative appeals.

Environmental Evaluation

It has been determined by an environmental evaluation that this

action will not have a significant impact on the quality of the human environment. Therefore, neither an Environmental Assessment nor an Environmental Impact Statement is needed.

Executive Order 12372

This program/activity is not subject to the provisions of Executive Order 12372, which requires intergovernmental consultation with State and local officials. See notice related to 7 CFR Part 3015, subpart V, published at 48 FR 29115 (June 24, 1983).

Paperwork Reduction Act

This final rule contains new reporting and recordkeeping requirements. The new requirements have been submitted to OMB for approval under the provisions of 44 U.S.C. 35. Send comments regarding this collection of information to: Department of Agriculture, Clearance Office, Office of Information Resources Management, Room 404–W, Washington, DC 20250, and Regulatory Affairs of OMB, Attention: Desk Officer for USDA, Room 3201, New Executive Office Building, Washington, DC 20503.

Final Regulatory Impact Analysis

The Final Regulatory Impact Analysis describing the impact of the implementation of this final rule is available upon request from Craig Jagger, Grains Analysis Division, CFSA, P.O. Box 2415, Washington, DC 20013–2415; telephone: (202) 720–4418.

Regulatory Flexibility Act

It has been determined under the Regulatory Flexibility Act that this final rule will have an adverse effect on a substantial number of small businesses. The analysis discussing these impacts is available upon request from Craig Jagger, at the address and telephone number noted above.

Background

The Act requires that a U.S. end-use certificate program be established for wheat and barley imported from any foreign country or instrumentality that, as of April 8, 1994, required end-use certificates for imports of U.S.-produced wheat and barley. As of that date and currently, Canada is the only country that has such a requirement for wheat. Neither Canada nor any other country had an end-use requirement for barley on April 8, 1994.

Pursuant to section 101(a)(2) of the Act, Congress approved the Statement of Administrative Action prepared to implement the North American Free Trade Agreement. The Statement of Administrative Action states that the purpose of the U.S. end-use requirement is to ensure that foreign agricultural commodities do not benefit from U.S. export programs. Such programs include, among others, the export credit guarantee program and the export enhancement program, both of which require any grain exports on which benefits are paid to be entirely produced in the United States. (7 U.S.C. 5622(h); 7 CFR 1493(a); 7 U.S.C. 5651(a); 7 CFR 1494.501(c)(20)(xi).

A notice requesting comments regarding an end-use certificate program was published in the **Federal Register** on April 13, 1994, at 59 FR 17495. Comments received in response to this notice were taken into account in the development of the proposed rule which was published on October 20, 1994, at 59 FR 52931.

The October 20 rule proposed to adopt a program similar to that of Canada with respect to imports of U.S.-produced wheat and barley. The rule proposed that importers of Canadian-produced wheat and barley would be required to store such imported grain separately from U.S.-produced grain until delivered to the end user.

The rule also proposed that, upon importation, each entry of wheat or barley from Canada must be reported to the Kansas City Commodity Office (KCCO), of the CFSA, on form ASCS–750, End-Use Certificate for Grain, within 10 days following the date of entry. Further, any importer, subsequent buyer, or end user storing Canadian-produced wheat or barley would be required to report to KCCO the status of the imported commodity on form ASCS–751, End-Use Certificate for Grain Quarterly Report, until the commodity is sold, resold, or fully used.

SUMMARY OF COMMENTS: Thirty-two timely comments were received in response to the proposed rule published in the **Federal Register** on October 20, 1994 (59 FR 52931). Twenty-four of the respondents supported the provisions contained in the proposed rule, while four were not in favor.

Of those supporting CFSA's proposed rule, 19 recommended immediate implementation of the end-use certificate program. However, so that U.S. importers will have ample time to establish separate storage, recordkeeping, and reporting systems, this final rule will not become effective until February 27, 1995.

Seventeen of the respondents recommended that CFSA collect information on the price paid by the U.S. importer for Canadian grain. This recommendation will not be adopted because CFSA does not have the statutory authority to collect such information.

Five respondents noted that the Government of Canada (GOC) has no end-use certificate requirements on imports of U.S.-produced barley and did not have such a requirement on April 8, 1994. After further review, it has been determined that, because the GOC has imposed only an import license requirement rather than an end-use certificate requirement on U.S.-produced barley, and because an import license is distinct from an end-use certificate requirement, CFSA has no statutory authority to implement an end-use certificate program for barley.

Three respondents indicated that a provision should be made to allow for the commingling of U.S. and Canadian grain at the time the commodity is being ''loaded out'' by either the importer or subsequent buyer to the end user. As proposed, commingling would be prohibited until the grain is delivered to the end user. It is implied that the commingling cannot occur at any facility other than that of the end user. The respondents stated that some end users do not have the capability to blend grain, and that not allowing commingling to occur at ''load out'' would preclude blending by merchandisers to meet the contract specifications of an end user. To clarify this provision and allow merchandisers to participate in commercial sales, the final rule provides that U.S.-produced wheat and Canadian-produced wheat may only be commingled by the end user or when loaded onto a conveyance for direct delivery to an end user.

Three respondents recommended that CFSA prohibit the disclosure of private information between buyers and sellers that will be collected as a result of the end-use requirements. Although this final rule does not contain a specific prohibition regarding the disclosure of collected information, CFSA will handle all data collected through the end-use requirements in accordance with current agency procedures used to comply with the Privacy Act and Freedom of Information Act requirements.

Three respondents expressed concern with the penalties for noncompliance, believing that the penalties were either too severe or should be increased as the incidence of violations increases. The Act specifies that a criminal violation occurs if a person engages in fraud or knowingly violates this regulation. Accordingly, CFSA has no statutory authority to change the applicable penalties.

Two respondents recommended that CFSA require exporters to forward copies of end-use certificates to foreign end users, such as flour millers or government entities which purchase U.S.-produced wheat under commercial terms for importation. This recommendation will not be adopted as it exceeds the statutory authority provided to CFSA under the Act.

Two respondents expressed concern that the proposed rule prohibited changes to the intended use of the commodity once an intended use is designated on the end-use certificate by the importer. Additionally, two other respondents recommended consolidating intended uses into only two categories, domestic use and export, which would permit the importer to deliver the commodity to any user, with no restrictions placed on the end use of the grain. The proposed rule reflects the Canadian system with respect to the prohibition of changing intended use once designated. However, because the proposed rule was not intended to restrict the use of Canadian-produced wheat as it flows through U.S. commercial channels, the final rule deletes the requirement for the importer to designate the intended use of Canadian-produced wheat at the time of importation. Information concerning the end-use of the wheat will be collected from end users and exporters.

Two respondents indicated that the proposed rule exceeded the legal authority provided under the Act by extending the application of end-use certificates, namely identity-preserved storage, to domestic food assistance programs. The respondents stated that (1) the legislative mandate requiring end-use certificates to protect the integrity of the U.S. export programs does not change the underlying laws governing domestic food assistance programs, and (2) CFSA's current system of assuring origin for domestic food assistance programs should remain intact, as described in the proposed rule. Inasmuch as entities who participate in domestic and foreign food assistance programs must comply with domestic origin requirements, this final rule provides only for the identity preserved storage of Canadian-produced wheat beginning with importation into the U.S. until the wheat is loaded onto a conveyance for direct delivery to an end user, or until delivered to the end user. This final rule does not impose requirements on the end-use of the imported wheat or change current domestic origin requirements.

One respondent recommended that CFSA establish an automated system to collect information required under the End-Use Certificate program. CFSA will work toward the automation of the collection and reporting requirements. Importers, end users, and subsequent buyers will, however, be required to provide CFSA with the required documentation in paper form until the automated process is complete.

One respondent recommended that the definition of end user should be amended to include export facilities. While the definition of end user has not been amended, specific provisions have been developed to provide instructions to importers or subsequent buyers who purchase Canadian-produced wheat for export and are incorporated into this final rule.

One respondent recommended that the quantity imported should be reported on a ''per conveyance'' basis. This recommendation has been incorporated into the final rule.

One respondent requested that the final rule provide for a waiver from the certificate requirement for importers, like himself, who use Canadian wheat as seed wheat. Importers of Canadian seed wheat will not be excluded from the requirements set forth in this final rule because such wheat may enter commercial markets if not used as originally intended after importation.

One respondent noted that the proposed 10-day reporting period for submitting information to KCCO is short. Because of the marketability of commodities such as wheat, and the ease with which title can transfer from one owner to another, it is vital to the success of the end-use certificate program for CFSA to have timely information relating to imported Canadian wheat. Failure to collect the information during the 10-day reporting period would make it difficult to ensure that the imported wheat is being used in a matter consistent with this final rule.

One respondent expressed concern over the proposed rule's provisions relating to bills of lading, stating that the provisions are in conflict with the Interstate Commerce Commission's regulations governing bills of lading. A further review of the information to be collected from importers indicates that by making a minor addition to the provisions for collection of data, CFSA would have sufficient data to track Canadian wheat through the U.S. commercial channels without requiring submission of bills of lading. Accordingly, the provisions that would have required the importer to submit to KCCO, within 10 workdays after delivery of the commodity to the end user, a bill of lading acknowledging receipt of the commodity have been withdrawn.

Minor changes have also been made in this final rule to the collection requirements. Specifically, the proposed form ASCS–750, End-Use Certificate for Grain, and form ASCS–751, End-Use Certificate for Grain Quarterly Report, have been revised to reflect the change in the agency name and deletion of the barley requirements. In addition, form ASCS–751 has been renamed to more accurately reflect the use of the form, and has been redesigned to incorporate changes that were made to simplify reporting requirements. Accordingly, the forms are titled ASCS–750, End-Use Certificate for Wheat, and ASCS–751, Wheat Consumption and Resale Report. In addition, importers are no longer required to include the intended use of the imported wheat on form ASCS–750, but are required to enter the customs entry number, date of entry, and importer number on form ASCS–750. This additional information is readily available to importers and will be used for (1) cross-referencing with information provided to CFSA by the Commissioner of Customs, and (2) verifying compliance with the policies and provisions set forth in this final rule. Also, the general information included on the ASCS–750 has been revised to incorporate the provisions that were proposed to be included in sales contracts entered into between importers and subsequent buyers, or between any subsequent buyers. Because importers and subsequent buyers are required to provide their purchasers with a copy of the ASCS–750, this final rule deletes all requirements for changes to sales contracts that were included in the proposed rule. Finally, on form ASCS–751, ''export'' will be added as an end use to allow exporters to properly designate the end use for wheat that will be purchased by foreign entities under commercial terms.

List of Subjects in 7 CFR Part 782

Administrative practice and procedure, Reporting and recordkeeping requirements, Wheat.

Accordingly, subchapter D, chapter VII of title 7 of the Code of Federal Regulations is amended by adding part 782 to read as follows:

PART 782—END-USE CERTIFICATE PROGRAM

Subpart A—General

Sec.

782.1 Basis and purpose.
782.2 Definitions.

782.3 Administration.
782.4 OMB control numbers assigned pursuant to the Paperwork Reduction Act.

Subpart B—Implementation of End-Use Certificate Program

782.10 Identification of commodities subject to end-use certificate regulations.
782.11 Extent to which commodities are subject to end-use certificate regulations.
782.12 Filing ASCS–750, End-Use Certificate for Wheat.
782.13 Importer responsibilities.
782.14 Identity preservation.
782.15 Filing ASCS–751, Wheat Consumption and Resale Report.
782.16 Designating end use on form ASCS–751.
782.17 Wheat purchased for resale.
782.18 Wheat purchased for export.
782.19 Penalty for noncompliance.

Subpart C—Records and Reports

782.20 Importer records and reports.
782.21 End-user and exporter records and reports.
782.22 Subsequent buyer records and reports.
782.23 Failure to file end-use certificates or consumption and resale reports.
782.24 Recordkeeping and examination of records.
782.25 Length of time records are to be kept.

Authority: 19 U.S.C. 3391(f).

Subpart A—General

§ 782.1 Basis and purpose.

The regulations contained in this part are issued pursuant to and in accordance with Section 321(f) of the North American Free Trade Agreement Implementation Act. These regulations govern the establishment of the end-use certificate program, the completion of end-use certificates, the identification of commodities requiring end-use certificates, the submission of reports, and the keeping of records and making of reports incident thereto.

§ 782.2 Definitions.

As used in this part and in all instructions, forms, and documents in connection therewith, the words and phrases defined in this section shall have the meanings herein assigned to them unless the context or subject matter requires otherwise. References contained herein to other parts of this chapter or title shall be construed as references to such parts and amendments now in effect or later issued.

Date of entry means the effective time of entry of the merchandise, as defined in 19 CFR part 101.

End Use means the actual manner in which Canadian-produced wheat was used, including, among other uses, milling, brewing, malting, distilling, manufacturing, or export.

End user means the entity that uses Canadian-produced wheat for, among other uses, milling, brewing, malting, distilling, manufacturing, or other use, except resale.

Entity means a legal entity including, but not limited to, an individual, joint stock company, corporation, association, partnership, cooperative, trust, and estate.

Entry means that documentation required by 19 CFR part 142 to be filed with the appropriate U.S. Customs officer to secure the release of imported merchandise from U.S. Customs custody, or the act of filing that documentation.

Importer means the person primarily liable for the payment of any duties on the merchandise, or an authorized agent acting on their behalf. The importer may be:

(1) The consignee, or

(2) The importer of record, or

(3) The actual owner of the merchandise, if an actual owner's declaration and superseding bond has been filed in accordance with 19 CFR part 141, or

(4) The transferee of the merchandise, if the right to withdraw merchandise in a bonded warehouse has been transferred in accordance with 19 CFR part 144.

Metric ton means a unit of measure that equals 2,204.6 pounds.

Subsequent buyer means an entity other than the end user or importer which owns wheat originating in Canada.

Workdays means days that the Federal government normally conducts business, which excludes Saturdays, Sundays, and Federal holidays.

§ 782.3 Administration.

The end-use certificate program will be administered under the general supervision and direction of the Administrator, Consolidated Farm Service Agency (CFSA), U.S. Department of Agriculture (USDA), through the Office of the Deputy Administrator for Commodity Operations (DACO), CFSA, Washington, D.C., and the Kansas City Commodity Office (KCCO), CFSA, Kansas City, MO, in coordination with the Commissioner of Customs pursuant to a Memorandum of Understanding.

§ 782.4 OMB control numbers assigned pursuant to the Paperwork Reduction Act.

The information collection requirements contained in these regulations (7 CFR part 782) have been submitted to the Office of Management and Budget (OMB) in accordance with the provisions of 44 U.S.C. 35 and will be assigned an OMB control number.

Subpart B—Implementation of the End-Use Certificate Program

§ 782.10 Identification of commodities subject to end-use certificate regulations.

(a) The regulations in this part are applicable to wheat and barley, respectively, imported into the U.S. from any foreign country, as defined in 19 CFR 134.1, or instrumentality of such foreign country that, as of April 8, 1994, required end-use certificates for imports of U.S.-produced wheat or barley.

(b) Because Canada is the only country with such requirements on wheat, and no country has an end-use certificate requirement for barley, only wheat originating in Canada is affected by the regulations in this part.

§ 782.11 Extent to which commodities are subject to end-use certificate regulations.

(a) In the event that Canada eliminates the requirement for end-use certificates on imports from the U.S., the provisions of the regulations in this part shall be suspended 30 calendar days following the date Canada eliminates its end-use certificate requirement, as determined by the Secretary.

(b) The provisions of the regulations in this part may be suspended if the Secretary, after consulting with domestic producers, determines that the program has directly resulted in the:

(1) Reduction of income to U.S. producers of agricultural commodities, or

(2) Reduction of the competitiveness of U.S. agricultural commodities in world export markets.

§ 782.12 Filing ASCS–750, End-Use Certificate for Wheat.

(a) Each entity that imports wheat originating in Canada shall, for each entry into the U.S., obtain form ASCS–750, End-Use Certificate for Wheat, from Kansas City Commodity Office, Warehouse License and Contract Division, P.O. Box 419205, Kansas City, MO 64141–6205, and submit the completed original form ASCS–750 to KCCO within 10 workdays following the date of entry. Each form ASCS–750 shall set forth, among other things, the:

(1) Name, address, and telephone number of the importer,

(2) Customs entry number,

(3) Date of entry,

(4) Importer number,

(5) Class of wheat being imported,

(6) Quantity imported, in net metric tons, rounded to the nearest hundredth of a metric ton, per conveyance,

(7) Storage location of the wheat,

(8) Name, address, and telephone number of the end user, if known,

(9) Mode of transportation and the name of the transportation company used to import the wheat, and

(10) A certification that the identity of the Canadian-produced wheat will be preserved until such time as the wheat is either delivered to a subsequent buyer or end-user, or loaded onto a conveyance for direct delivery to an end user.

(b) The original form ASCS–750 and one copy of form ASCS–750 shall be signed and dated by the importer.

(c) Distribution of form ASCS–750 will be as follows:

(1) The original shall be forwarded to Kansas City Commodity Office, Warehouse License and Contract Division, P.O. Box 419205, Kansas City, MO 64141–6205, by the importer,

(2) One copy shall be retained by the importer,

(3) The importer shall provide a photocopy to the end user or, if the wheat is purchased for purposes of resale, the subsequent buyer(s).

(d) The completion and filing of an end-use certificate does not relieve the importer of other legal requirements, such as those imposed by other U.S. agencies, pertaining to the importation.

§ 782.13 Importer responsibilities.

The importer shall:

(a) File form ASCS–750 in accordance with § 782.12.

(b) Provide each subsequent buyer or end user with a copy of form ASCS–750 that was filed when the Canadian wheat entered the U.S.

(c) Submit to KCCO, within 10 workdays following the date of sale, form ASCS–751, Wheat Consumption and Resale Report, in accordance with § 782.15.

§ 782.14 Identity preservation.

(a) The importer and all subsequent buyers of the imported wheat shall preserve the identity of the Canadian-produced wheat.

(b) Canadian-produced wheat may only be commingled with U.S.-produced wheat by the end user, or when loaded onto a conveyance for direct delivery to the end user or foreign country.

(c) Failure to meet the requirements in paragraphs (a) and (b) of this section shall constitute noncompliance by the importer or subsequent buyer for the purposes of this part.

§ 782.15 Filing ASCS–751, Wheat Consumption and Resale Report.

(a) For purposes of providing information relating to the consumption and resale of Canadian-produced wheat, form ASCS–751, Wheat Consumption and Resale Report, shall be filed with KCCO by each:

(1) Importer and subsequent buyer, for each sale to a subsequent buyer or end user, within 10 workdays following the date of sale.

(2) End user and exporter, for full and partial consumption or export, within 15 workdays following:

(i) March 31,

(ii) June 30,

(iii) September 30, and

(iv) December 31.

(b) Each form ASCS–751 shall set forth, among other things, the:

(1) Name, address, and telephone number of the filer,

(2) Storage location of the wheat,

(3) Name and address of the importer,

(4) Form ASCS–750, End-Use Certificate for Wheat, serial number,

(5) Class of wheat,

(6) Date the wheat was received at the filer's facility,

(7) Quantity of wheat received, in net metric tons, rounded to the nearest hundredth of a metric ton,

(8) Certification to be completed by end users and exporters that requires the end user or exporter to provide, among other things:

(i) A certification of compliance with these regulations,

(ii) The quantity consumed or exported,

(iii) The quantity remaining,

(iv) The manner in which the commodity was used.

(v) The signature of an authorized representative of the end user or exporter.

(9) Certification to be completed by subsequent buyers and importers that requires the subsequent buyer or importer to provide, among other things:

(i) A certification of compliance with the regulations in this part,

(ii) The quantity resold,

(iii) The name, address, and telephone number of the buyer, and

(iv)The signature of an authorized representative of the subsequent buyer or importer.

(c) End user and exporter shall submit form ASCS–751 to KCCO quarterly until the wheat has been fully utilized or exported in accordance with the regulations in this part.

(d) Importers and subsequent buyers shall, for each individual sale, submit form ASCS–751 to KCCO until the imported wheat has been fully resold.

§ 782.16 Designating end use on form ASCS–751.

(a) If the end use specified on the applicable form ASCS–751, Wheat Consumption and Resale Report, is ''export,'' the exporter must specify the final destination, by country, on form ASCS–751.

(b) If the end user utilizes the wheat for purposes other than milling, brewing, malting, distilling, export, or manufacturing, such use must be specifically designated on form ASCS–751.

§ 782.17 Wheat purchased for resale.

(a) This section applies to an importer or subsequent buyer who imports or purchases Canadian-produced wheat for the purpose of reselling the wheat.

(b) The importer or subsequent buyer shall provide all purchasers of Canadian-produced wheat with a photocopy of the form ASCS–750 submitted to KCCO by the importer in accordance with § 782.12(a).

§ 782.18 Wheat purchased for export.

(a) This section applies to an importer or subsequent buyer who imports or purchases Canadian-produced wheat for the purpose of export to a foreign country or instrumentality.

(b) Wheat that is purchased for the purpose of export must be stored identity preserved while the importer or subsequent buyer maintains control of the wheat, except that such wheat may be commingled when loaded onto a conveyance for delivery to the foreign country or instrumentality.

(c) Importers or subsequent buyers that purchase wheat for export to a foreign country or instrumentality must complete form ASCS–751 quarterly, in accordance with § 782.15.

§ 782.19 Penalty for noncompliance.

It shall be a violation of 18 U.S.C. 1001 for any entity to engage in fraud with respect to, or to knowingly violate, the provisions set forth in this part.

Subpart C—Records and Reports

§ 782.20 Importer records and reports.

(a) The importer shall retain a copy of each form:

(1) ASCS–750, End-Use Certificate for Wheat, that is submitted to KCCO in accordance with § 782.12(a); and

(2) ASCS–751, Wheat Consumption and Resale Report, that is submitted to KCCO in accordance with § 782.15(a)(1).

(b) The importer shall maintain records to verify that the wheat was identity preserved until such time as the wheat was:

(1) Loaded onto the conveyance for direct delivery to an end user, or

(2) Delivered to an end user, or

(3) Delivered to a subsequent buyer.

(c) Copies of the documents, information, and records required in paragraphs (a) and (b) of this section shall be kept on file at the importer's

headquarters office or other location designated by the importer for the period specified in § 782.25.

§ 782.21 End-user and exporter records and reports.

(a) The end user or exporter shall retain a copy of each form ASCS–751, Wheat Consumption and Resale Report, that is filed with KCCO in accordance with § 782.15(a)(2).

(b) The end user or exporter shall retain a copy of each form ASCS–750, End-Use Certificate for Wheat, provided to the end-user or exporter in accordance with § 782.17(b).

(c) The exporter shall maintain records to verify that wheat purchased for the purpose of export was stored identity preserved until such time as the wheat was loaded onto a conveyance for delivery to the foreign country or instrumentality.

(d) Copies of the documents required in paragraphs (a), (b), and (c) of this section shall be kept on file at the end-user's or exporter's headquarters office or other location designated by the end user or exporter for the period specified in § 782.25.

§ 782.22 Subsequent buyer records and reports.

(a) The subsequent buyer shall retain a copy of each form ASCS–751, Wheat Consumption and Resale Report, that is filed with KCCO in accordance with § 782.15(a)(1).

(b) The subsequent buyer shall retain a copy of each form ASCS–750, End-Use Certificate for Wheat, provided to the subsequent buyer in accordance with § 782.17(b).

(c) The subsequent buyer shall maintain records to verify that the wheat specified on the end-use certificate was identity preserved during the time that the subsequent buyer maintained control of the wheat, or until the wheat was loaded onto a conveyance for direct delivery to an end user.

(d) Copies of the documents and records required in paragraphs (a) through (c) of this section shall be kept on file at the subsequent buyer's headquarters office or other location designated by the subsequent buyer for the period specified in § 782.25.

§ 782.23 Failure to file end-use certificates or consumption and resale reports.

Failure by importers, end users, exporters, and subsequent buyers to file form ASCS–750, End-Use Certificate for Wheat, and form ASCS–751, Wheat Consumption and Resale Report, as applicable, and retain or maintain related copies and records shall constitute noncompliance for the purposes of § 782.19.

§ 782.24 Recordkeeping and examination of records.

(a) *Examination*. For the purpose of verifying compliance with the requirements of this part, each importer, end-user, exporter, and subsequent buyer shall make available at one place at all reasonable times for examination by representatives of USDA, all books, papers, records, contracts, scale tickets, settlement sheets, invoices, written price quotations, or other documents related to the importation of the Canadian-produced wheat that is within the control of such entity.

(b) Orderly retention of records. To facilitate examination and verification of the records and reports required by this part, copies of form ASCS–750, End-Use Certificate for Wheat, and form ASCS–751, Wheat Consumption and Resale Report, shall be filed in an orderly manner, and must be made available for inspection by representatives of USDA.

§ 782.25 Length of time records are to be kept.

The records required to be kept under this part shall be retained for 3 years following the filing date of the applicable record. Records shall be kept for such longer period of time as may be requested in writing by USDA representatives.

[**Note:** The following forms will not appear in the Code of Federal Regulations.]

Signed at Washington, DC on January 19, 1995.

Grant Buntrock,

Acting Administrator, Consolidated Farm Service Agency.

BILLING CODE 3410–05–P

Form Approved - OMB No. 0560-XXXX

ASCS-750 (Proposal 8)

U.S. DEPARTMENT OF AGRICULTURE
Consolidated Farm Service Agency

END-USE CERTIFICATE FOR WHEAT

FOR INTERNAL USE ONLY

Date: _____

Initials: _____

Serial Number: XXXXXXXX

NOTE: *The following statement is made in accordance with the Privacy Act of 1974 (5 USC 552a) and the Paperwork Reduction Act of 1980, as amended. The authority for requesting the following information is 7 CFR Part 782. The information will be used to verify compliance by the importer of wheat, subsequent buyer or an end user of imported wheat with the provisions of 7 CFR Part 782. Furnishing the requested information is mandatory. Failure to comply with the regulations governing the End-Use Certificate Program may result in the assessment of penalties in accordance with 7 CFR Part 782 against the non-complying party. This information may be provided to other agencies, IRS, Department of Justice, or other State and Federal Law enforcement agencies, and in response to a court magistrate or administrative tribunal. The provisions of criminal and civil fraud statutes, including 18 USC 286, 287, 371, 651, 1001; 15 USC 714m; and 31 USC 3729, are applicable to the information provided.*

Public reporting burden for this collection of information is estimated to average 10 minutes per response, including the time for reviewing instructions, searching existing data sources, gathering and maintaining the data needed, and completing and reviewing the collection of information. Send comments regarding this burden estimate or any other aspect of this collection of information, including suggestions for reducing this burden, to Department of Agriculture, Clearance Officer, OIRM, AG Box 7630, Washington, D.C. 20250; and to the Office of Management and Budget, Paperwork Reduction Project (OMB No. 0560-XXXX), Washington, D.C. 20503. ***RETURN THIS COMPLETED FORM TO THE KANSAS CITY COMMODITY OFFICE, WAREHOUSE LICENSE AND CONTRACT DIVISION, P.O. BOX 419205, KANSAS CITY, MO 64141-6205 WITHIN 10 WORKDAYS FROM THE DATE OF ENTRY (ITEM 4).***

1. Importer's Name and Address *(include street, city, state, ZIP code)*	2. Importer's Telephone Number *(include area code)*
3. Custom's Entry Number / 4. Date of Entry *(month, day, year)*	5. Importer Number / 6. Class of Wheat
7. Quantity Imported *(in net metric tons, per conveyance)*	8. Storage Location
9. Transportation Company	10. Mode of Transportation *(mark one box)* ☐ RAIL ☐ TRUCK ☐ BARGE ☐ VESSEL

11. CERTIFICATION

I, acting as agent for the importer named above for the purpose of completing this form, declare that I have personal knowledge concerning the wheat described above. I agree to preserve the identity of the wheat, and will not commingle or blend the imported wheat with U.S. produced wheat until such time as the imported wheat is (1) delivered to an end user, or (2) loaded onto a conveyance for direct delivery to the end user or foreign country. I further agree to provide copies of this form to all parties when I sell this wheat, and to provide the U.S. Department of Agriculture's Kansas City Commodity Office, P.O. Box 419205, Kansas City, MO 64141-6205, with copies of all required documentation in accordance with 7 CFR Part 782.

A. Importer's Authorized Representative *(Please Print)*	B. Title
C. Signature	D. Date

This program or activity will be conducted on a nondiscriminatory basis without regard to race, color, religion, national origin, age, sex, marital status, or disability.

BILLING CODE 3410–05–C

General Information

• The United States Department of Agriculture (USDA) provides end-use certificates for persons requiring such certificates for the importation of Canadian-produced wheat into the United States.

• Regulations regarding the End-Use Certificate Program can be found at 7 CFR Part 782. Copies of these regulations can be obtained from the Kansas City Commodity Office (KCCO) at the address shown below.

• Form ASCS–750, End-Use Certificate for Wheat, is required for each entry of Canadian-produced wheat, and must be submitted by the importer to KCCO at the address shown below within 10 workdays following the date of entry.

• Copies of forms ASCS–750, End-Use Certificate for Wheat, and ASCS–751, Wheat Consumption and Resale Report, can be obtained from KCCO at the address shown below.

• Wheat covered by an end-use certificate must be stored identity preserved, and may not be commingled or blended with U.S.-produced wheat until such time as the Canadian-produced wheat is either delivered to an end user, or loaded onto a conveyance for direct delivery to an end user.

• When wheat covered by this end-use certificate is sold to subsequent buyers or end users, the importer and all subsequent buyers must also:

—provide purchasers with copies of the front and reverse sides of this form.

—submit form ASCS–751, Wheat Consumption and Resale Report, within 10 workdays of the date of each individual sale to a subsequent buyer or end user, to KCCO at the address shown below.

• When wheat covered by this end-use certificate is sold to an end user, the end user must submit form ASCS–751, Wheat Consumption and Resale Report, to KCCO at the address shown below, to report consumption of the Canadian-produced wheat. Reports from the end user must be submitted within 15 workdays following March 31, June 30, September 30, and December 31.

• If wheat covered by this end-use certificate will be exported to a foreign country, the exporter must store the Canadian-produced wheat identity preserved until the wheat is loaded onto a conveyance for delivery to the foreign country. Exporters must submit form ASCS–751, Wheat Consumption and Resale Report, to KCCO at the address shown below, to report the exportation of Canadian-produced wheat. Reports from exporters must be submitted within 15 workdays following March 31, June 30, September 30, and December 31.

• The reports and records of all parties that, at any point in time had control of wheat covered by an end-use certificate are subject to inspection by a representative of USDA.

Address for KCCO: Kansas City Commodity Office, Warehouse License and Contract Division, P.O. Box 419205, Kansas City, MO 64141–6205.

BILLING CODE 3410–05–P

Form Approved - OMB No. 0560-XXXX

ASCS-751
(Proposal 7)

U.S. DEPARTMENT OF AGRICULTURE
Consolidated Farm Service Agency

FOR INTERNAL USE ONLY

Date: _____

Initials: _____

WHEAT CONSUMPTION AND RESALE REPORT

NOTE: *The following statement is made in accordance with the Privacy Act of 1974 (5 USC 552a) and the Paperwork Reduction Act of 1980, as amended. The authority for requesting the following information is 7 CFR Part 782. The information will be used to verify compliance by the importer, end user or subsequent buyer of imported wheat with the provisions of 7 CFR Part 782. Furnishing the requested information is mandatory. Failure to comply with the regulations governing the End-Use Certificate Program may result in the assessment of penalties in accordance with 7 CFR Part 782 against the non-complying party. This information may be provided to other agencies, IRS, Department of Justice, or other State and Federal Law enforcement agencies, and in response to a court magistrate or administrative tribunal. The provisions of criminal and civil fraud statutes, including 18 USC 286, 287, 371, 651, 1001; 15 USC 714m; and 31 USC 3729, are applicable to the information provided.*

Public reporting burden for this collection of information is estimated to average 6.5 hours per response, including the time for reviewing instructions, searching existing data sources, gathering and maintaining the data needed, and completing and reviewing the collection of information. Send comments regarding this burden estimate or any other aspect of this collection of information, including suggestions for reducing this burden, to Department of Agriculture, Clearance Officer, OIRM, AG Box 7630, Washington, D.C. 20250; and to the Office of Management and Budget, Paperwork Reduction Project (OMB No. 0560-XXXX), Washington, D.C. 20503. ***RETURN THE ORIGINAL OF THIS COMPLETED FORM TO THE KANSAS CITY COMMODITY OFFICE, WAREHOUSE LICENSE AND CONTRACT DIVISION, P.O. BOX 419205, KANSAS CITY, MO 64141-6205.***

PART A - GENERAL INFORMATION

1. Filer's Name and Address *(include street, city, state, ZIP code)*	2. Filer's Telephone Number *(include area code)*	3. Storage Location of the Wheat
4. Importer's Name and Address *(include street, city, state, ZIP code)*	5. End-Use Certificate for Wheat Serial No.	6.Class of Wheat
7. Date of Receipt	9. Quantity Received in Net Metric Tons *(Complete only on initial report for the End-Use Certificate for wheat serial number in item 5. Leave blank for subsequent reports.)*	

PART B - CERTIFICATION BY END USERS AND EXPORTERS *(Must be filed quarterly)*

I certify that:

- *I have personal knowledge concerning the consumption or export of the wheat described above.*
- *The wheat has been fully or partially consumed at my facility, or exported in accordance with provisions in 7 CFR Part 782.*
- *I will continue to provide the U.S. Department of Agriculture's Kansas City Commodity Office, Warehouse License and Contract Division, P.O. Box 419205, Kansas City, MO 64141-6205, with Wheat Consumption and Resale Reports until the wheat is fully consumed at my facility or exported.*
- *The wheat was consumed or exported as described below.*

10. Quantity Consumed or Exported *(report in metric tons)*	11. Quantity Remaining *(report in metric tons)*

12. Use *(mark all applicable items)*:

☐ Milling for Animal Feed ☐ Manufacturing ☐ Distilling ☐ Export *(enter destination)* _____

☐ Milling for Human Consumption ☐ Brewing or Malting ☐ Other *(Please specify)*: _____

13A. Signature of Authorized Representative	13B. Date

PART C - CERTIFICATION BY SUBSEQUENT BUYERS AND IMPORTERS *(Must be filed within 10 workdays of sale)*

I certify that:

- *I have personal knowledge concerning the wheat described above.*
- *I preserved the identity of the wheat in accordance with the provisions at 7 CFR Part 782 until the wheat was (1) delivered to an end user, or (2) loaded onto a conveyance for direct delivery to the end user or foreign country.*
- *I provided a copy of the applicable form ASCS-750 to each subsequent buyer or end user.*
- *I will continue to report each individual sale to the U.S. Department of Agriculture's Kansas City Commodity Office, Warehouse License and Contract Division, P.O. Box 419205, Kansas City, MO 64141-6205, until the wheat is fully resold.*
- *The following wheat was sold as described below.*

14. Quantity Resold *(report in metric tons)*	15. Name, Address and Telephone Number of the Buyer *(for the address, include street, city, state and Zip code; for the telephone number, include the area code)*
16A. Signature of Authorized Representative	16B. Date

This program or activity will be conducted on a nondiscriminatory basis without regard to race, color, religion, national origin, age, sex, marital status, or disability.

End User's and Exporters must file this report quarterly to report consumptions and exports. This report must be filed within 15 workdays following March 31, June 30, September 30, and December 31, until the wheat is fully consumed or exported.

Subsequent Buyers and Importers must file this report for each individual resale of imported Canadian wheat. This report must be filed within 10 workdays following the date of sale.

☐ Kansas City Commodity Office's Copy (Original) ☐ Filer's Copy

BILLING CODE 3410-05-C

General Information

- The United States Department of Agriculture (USDA) provided End-Use Certificates for Wheat (ASCS–750) for persons required to submit these certificates for the importation of Canadian-produced wheat into the United States.
- Regulations governing the End-Use Certificate Program can be found at 7 CFR Part 782.
- Wheat covered by an End-Use Certificate for Wheat must be stored identity preserved until such time as the wheat is (1) Delivered to an end user, or (2) loaded onto a conveyance for delivery to an end user for foreign country.
- Copies of ASCS–751, Wheat Consumption and Resale Report can be obtained from the Kansas City Commodity Office, Warehouse License and Contract Division, P.O. Box 419205, Kansas City, MO 64141–6205.
- ASCS–751, Wheat Consumption and Resale Report must be filed by each end user, subsequent buyer, exporter, and importer.
- All filers must complete Section A, General Information.
- End users and exporters must complete Section B, Certification by End Users and Exporters.
- Subsequent buyers and importers must complete Section C, Certification by Subsequent Buyers and Importers.
- End users and exporters file form ASCS–751 to report quarterly consumption and exports. Reports are due from end users and exporters within 15 workdays following March 31, June 30, September 30, and December 31.
- Subsequent buyers and importers must file form ASCS–751 for each individual sale. Reports are due from subsequent buyers and importers within 10 workdays following the date of the sale.

[FR Doc. 95–1866 Filed 1–25–95; 8:45 am]

BILLING CODE 3410–05–P

Rural Utilities Service

7 CFR Part 1755

Standard for Splicing Copper and Fiber Optic Cables

AGENCY: Rural Utilities Service, USDA.

ACTION: Final rule.

SUMMARY: The Rural Utilities Service (RUS) hereby amends its regulations on telecommunications standards and specifications for materials, equipment and construction. The revised standard will update the splicing methods and materials used for splicing copper cables brought about through technological advancements over the past fifteen years and incorporate a section into the standard dealing with the splicing methods and materials used to splice fiber optic cables.

DATES: Effective date: February 27, 1995.

Incorporation by reference: Incorporation by reference of certain publications listed in this final rule is approved by the Director of the Federal Register as of February 27, 1995.

FOR FURTHER INFORMATION CONTACT: Garnett G. Adams, Chief, Outside Plant Branch, Telecommunications Standards Division, Rural Utilities Service, room 2844, South Building, U.S. Department of Agriculture, Washington, DC 20250–1500, telephone (202) 720–0667.

SUPPLEMENTARY INFORMATION:

Executive Order 12866

This final rule has been determined to be not significant for the purposes of Executive Order 12866 and therefore has not been reviewed by the Office of Management and Budget.

Executive Order 12778

This final rule has been reviewed under Executive Order 12778, Civil Justice Reform. If adopted, this final rule will not:

(1) Preempt any State or local laws, regulations, or policies;

(2) Have any retroactive effect; and

(3) Require administrative proceedings before parties may file suit challenging the provisions of this rule.

Regulatory Flexibility Act Certification

The Administrator of RUS has determined that this final rule will not have a significant economic impact on a substantial number of small entities, as defined by the Regulatory Flexibility Act (5 U.S.C. 601 *et seq.*). This final rule involves standards and specifications, which may increase the direct short term costs to RUS borrowers. However, the long-term direct economic costs are reduced through greater durability and lower maintenance cost over time.

Information Collection and Recordkeeping Requirements

This final rule contains no information collection or recordkeeping requirements under the Paperwork Reduction Act of 1980 (Pub. L. 96–511).

National Environmental Policy Act Certification

The Administrator of RUS has determined that this final rule will not significantly affect the quality of the human environment as defined by the National Environmental Policy Act of 1969 (42 U.S.C. 4321 *et seq.*). Therefore, this action does not require an environmental impact statement or assessment.

Catalog of Federal Domestic Assistance

The program described by this final rule is listed in the Catalog of Federal Domestic Assistance programs under No. 10.851, Rural Telephone Loans and Loan Guarantees, and No. 10.582, Rural Telephone Bank Loans. This catalog is available on a subscription basis from the Superintendent of Documents, the United States Government Printing Office, Washington, DC 20402.

Executive Order 12372

This final rule is excluded from the scope of Executive Order 12372, Intergovernmental Consultation that requires intergovernmental consultation with state and local officials. A Notice of Final Rule titled Department Programs and Activities Excluded from Executive Order 12372 (50 FR 47034) exempts RUS and RTB loans and loan guarantees, and RTB bank loans, to governmental and nongovernmental entities from coverage under this Order.

Background

RUS issues publications titled ''Bulletin'' which serve to guide borrowers regarding already codified policy, procedures, and requirements needed to manage loans, loan guarantee programs, and the security instruments which provide for and secure RUS financing. RUS issues standards and specifications for the construction of telephone facilities financed with RUS loan funds. RUS is rescinding Bulletin 345–6, RUS Standard for Splicing Plastic-Insulated Cables, PC–2, and codifying the revised standard at 7 CFR 1755.200, RUS Standard for Splicing Copper and Fiber Optic Cables.

RUS Bulletin 345–6 is used by borrowers and contractors as an outside plant construction standard for splicing copper cables installed in aerial and buried splice closures, ready-access enclosures, and buried plant housings. Because of technological advancements made in copper cable splicing methods and materials over the past fifteen years, the current splicing methods and materials relating to copper cables specified in the current standard have become outdated. To allow borrowers and contractors to take advantage of these improved methods and materials which will reduce installation costs, the current standard will be revised to update the copper cable splicing methods and materials to reflect these improved methods and materials.

The current standard does not include splicing methods and materials used for fiber optic cables because at the time the standard was written no such methods and materials were addressed because RUS borrowers were providing telecommunication services to subscribers only over copper cables. Since that time RUS borrowers have been providing telecommunication services to subscribers over both copper and fiber optic cables. Since RUS borrowers are installing fiber optic cables to provide subscriber services, the current standard needs to be revised to provide borrowers and contractors with standardized splicing methods and materials for fiber optic cables.

This action will allow borrowers and contractors an economical and efficient means of reducing their construction costs through the use of improved splicing techniques for copper cables and standardized splicing methods for fiber optic cables.

On August 29, 1994, RUS published a proposed rule (59 FR 44347) to rescind RUS Bulletin 345–6, RUS Standard for Splicing Plastic-Insulated Cables, PC–2, and to codify the revised standard at 7 CFR 1755.200, RUS Standard for Splicing Copper and Fiber Optic Cables. Comments on this proposed rule were due by October 28, 1994. No comments were received by this due date.

Although no comments were received from any outside party on the proposed rule, RUS, upon review of the proposed rule, discovered that paragraph (e)(8) which makes reference to paragraphs (g)(4), (g)(5)(i), (g)(5)(ii), and (g)(5)(iv) should be changed to reference paragraphs (g)(4), and (g)(5)(i) through (g)(5)(iii) because paragraph (g)(5)(iv) did not exist in the proposed rule. Therefore RUS will change the paragraph (e)(8) to make reference to paragraphs (g)(4), and (g)(5)(i) through (g)(5)(iii). This change will not result in any change in the technical requirements of paragraph (e)(8).

List of Subjects in 7 CFR Part 1755

Incorporation by reference, Loan programs—communications, Rural areas, Telephone.

For reasons set out in the preamble, RUS amends chapter XVII of title 7 of the Code of Federal Regulations as follows:

PART 1755—TELECOMMUNICATIONS STANDARDS AND SPECIFICATIONS FOR MATERIALS, EQUIPMENT AND CONSTRUCTION

1. The authority citation for part 1755 continues to read as follows:

Authority: 7 U.S.C. 901 *et seq.,* 1921 *et seq.*

§ 1755.97 [Amended]

2. Section 1755.97 is amended by removing the entry for RUS Bulletin 345–6 from the table.

3. Section 1755.98 is amended by adding a new entry to the table in numerical order to read as follows:

§ 1755.98 List of telephone standards and specifications included in other 7 CFR parts.

* * * * *

Section	Issue date	Title
1755.200 ..	Jan. 26, 1995 ..	RUS Standard for Splicing Copper and Fiber Optic Cables.
*	*	* * *

4. Section 1755.200 is added to read as follows:

§ 1755.200 RUS standard for splicing copper and fiber optic cables.

(a) *Scope.* (1) This section describes approved methods for splicing plastic insulated copper and fiber optic cables. Typical applications of these methods include aerial, buried, and underground splices.

(2) American National Standard Institute/National Fire Protection Association (ANSI/NFPA) 70, 1993 National Electrical Code (NEC) referenced in this section is incorporated by reference by RUS. This incorporation by reference was approved by the Director of the Federal Register in accordance with 5 U.S.C. 552(a) and 1 CFR part 51. A copy of the ANSI/NFPA 1993 NEC standard is available for inspection during normal business hours at RUS, room 2845, U.S. Department of Agriculture, Washington, DC 20250–1500 or at the Office of the Federal Register, 800 North Capitol Street, NW., suite 700, Washington, DC. Copies are available from NFPA, Batterymarch Park, Quincy, Massachusetts 02269, telephone number 1 (800) 344–3555.

(3) American National Standard Institute/Institute of Electrical and Electronics Engineers, Inc. (ANSI/IEEE), 1993 National Electrical Safety Code (NESC) referenced in this section is incorporated by reference by RUS. This incorporation by reference was approved by the Director of the Federal Register in accordance with 5 U.S.C. 552(a) and 1 CFR part 51. A copy of the ANSI/IEEE 1993 NESC standard is available for inspection during normal business hours at RUS, room 2845, U.S. Department of Agriculture, Washington, DC 20250–1500 or at the Office of the Federal Register, 800 North Capitol Street, NW., suite 700, Washington, DC. Copies are available from IEEE Service Center, 455 Hoes Lane, Piscataway, New Jersey 08854, telephone number 1 (800) 678–4333.

(b) *General.* (1) Only Rural Utilities Service (RUS) accepted filled cable and splicing materials shall be used on outside plant projects financed by RUS.

(2) The installation instructions provided by the manufacturer of splicing materials shall be followed except where those instructions conflict with the procedures specified in this section.

(3) Precautions shall be taken to prevent the ingress of moisture and other contaminants during all phases of the splicing installation. When an uncompleted splice must be left unattended, it shall be sealed to prevent the ingress of moisture and other contaminants.

(4) Minor sheath damage during construction may be repaired if the repair is completed immediately and approved by the borrower's resident project representative. Minor damage is typically repaired by:

(i) Scuffing the cable sheath associated with the damaged area;

(ii) Applying several layers of DR tape over the scuffed and damaged area;

(iii) Applying several layers of plastic tape over the DR tape; and

(iv) If damage is severe enough to rupture the cable shield, a splice closure shall be installed.

(5) All splice cases installed on RUS toll trunk and feeder cables shall be filled, whether aerial, buried, or underground.

(c) *Splicing considerations for copper cables*—(1) *Preconstruction testing.* It is desirable that each reel of cable be tested for grounds, opens, shorts, crosses, and shield continuity before the cable is installed. However, manufacturer supplied test results are acceptable. All cable pairs shall be free from electrical defects.

(2) *Handling precautions.* The cable manufacturer's instructions concerning pulling tension and bending radius shall be observed. Unless the cable manufacturer's recommendation is more stringent, the minimum bending radius shall be 10 times the cable diameter for copper cables and 20 times the cable diameter for fiber optic cables.

(3) *Cable sheath removal.* (i) The length of cable sheath to be removed shall be governed by the type of splicing hardware used. Follow the splice case manufacturer's recommendations. For pedestals or large pair count splice housings, consider removing enough cable sheath to allow the conductors to

extend to the top of the pedestal and then to hang downward to approximately 15 centimeters (cm) (6 inches (in.)) above the baseplate.

(ii) Caution shall be exercised to avoid damaging the conductor insulation when cutting through the cable shield and removing the shield. Sharp edges and burrs shall be removed from the cut end of the shield.

(4) *Shield bonding and grounding.* For personnel safety, the shields of the cables to be spliced shall be bonded together and grounded before splicing activities are started. (See paragraphs (g)(2), and (g)(5)(i) through (g)(5)(iii) of this section for final bonding and grounding provisions.)

(5) *Binder group identification.* (i) Color coded plastic tie wraps shall be placed loosely around each binder group of cables before splicing operations are attempted. The tie wraps shall be installed as near the cable sheath as practicable and shall conform to the same color designations as the binder ribbons. Twisted wire pigtails shall not be used to identify binder groups due to potential transmission degradation.

(ii) The standard insulation color code used to identify individual cable pairs within 25-pair binder groups shall be as shown in Table 1:

TABLE 1.—CABLE PAIR IDENTIFICATION WITHIN BINDER GROUPS

Pair No.	Color	
	Tip	Ring
1	White	Blue.
2	White	Orange.
3	White	Green.
4	White	Brown.
5	White	Slate.
6	Red	Blue.
7	Red	Orange.
8	Red	Green.
9	Red	Brown.
10	Red	Slate.
11	Black	Blue.
12	Black	Orange.
13	Black	Green.
14	Black	Brown.
15	Black	Slate.
16	Yellow	Blue.
17	Yellow	Orange.
18	Yellow	Green.
19	Yellow	Brown.
20	Yellow	Slate.
21	Violet	Blue.
22	Violet	Orange.
23	Violet	Green.
24	Violet	Brown.
25	Violet	Slate.

(iii) The standard binder ribbon color code used to designate 25-pair binder groups within 600-pair super units shall be as shown in Table 2:

TABLE 2.—CABLE BINDER GROUP IDENTIFICATION

Group No.	Color of bindings	Group pair count
1	White-Blue	1–25
2	White-Orange	26–50
3	White-Green	51–75
4	White-Brown	76–100
5	White-Slate	101–125
6	Red-Blue	126–150
7	Red-Orange	151–175
8	Red-Green	176–200
9	Red-Brown	201–225
10	Red-Slate	226–250
11	Black-Blue	251–275
12	Black-Orange	276–300
13	Black-Green	301–325
14	Black-Brown	326–350
15	Black-Slate	351–375
16	Yellow-Blue	376–400
17	Yellow-Orange	401–425
18	Yellow-Green	426–450
19	Yellow-Brown	451–475
20	Yellow-Slate	476–500
21	Violet-Blue	501–525
22	Violet-Orange	526–550
23	Violet-Green	551–575
24	Violet-Brown	576–600

(iv) Super-unit binder groups shall be identified in accordance with Table 3:

TABLE 3.—SUPER-UNIT BINDER COLORS

Pair numbers	Binder color
1–600	White.
601–1200	Red.
1201–1800	Black.
1801–2400	Yellow.
2401–3000	Violet.
3001–3600	Blue.
3601–4200	Orange.
4201–4800	Green.
4801–5400	Brown.
5401–6000	Slate.

(v) Service pairs in screened cables shall be identified in accordance with Table 4:

TABLE 4.—SCREENED CABLE SERVICE PAIR IDENTIFICATION

Service pair No.	Color	
	Tip	Ring
1	White	Red.
2	White	Black.
3	White	Yellow.
4	White	Violet.
5	Red	Black.
6	Red	Yellow.
7	Red	Violet.
8	Black	Yellow.
9	Black	Violet.

(6) *Cleaning conductors.* It is not necessary to remove the filling compound from cable conductors before splicing. However, it is permissible to wipe individual conductors with clean paper towels or clean cloth rags. No cleaning chemicals, etc., shall be used. Caution shall be exercised to maintain individual cable pair and binder group identity. Binder group identity shall be maintained by using color coded plastic tie wraps. Individual pair identification shall be maintained by carefully twisting together the two conductors of each pair.

(7) *Expanded plastic insulated conductor (PIC) precautions.* Solid PIC and expanded (foam or foam skin) PIC are spliced in the same manner, using the same tools and materials and, in general, should be treated the same. However, the insulation on expanded PIC is much more fragile than solid PIC. Twisting or forming expanded PIC into extremely compact splice bundles and applying excessive amounts of tension when tightening tie wraps causes shiners and, thus shall be avoided.

(8) *Splice connectors.* (i) Only RUS accepted filled splice connectors shall be used on outside plant projects financed by RUS.

(ii) Specialized connectors are available for splicing operations such as butt splices, in line splices, bridge taps, clearing and capping, and multiple pair splicing operations. The splice connector manufacturer's recommendations shall be followed concerning connector selection and use.

(iii) Caution shall be exercised to maintain conductor and pair association both during and after splicing operations.

(iv) Splicing operations that involve pairs containing working services shall utilize splice connectors that permit splicing without the interruption of service.

(9) *Piecing out conductors.* Conductors may be pieced-out to provide additional slack or to repair damaged conductors. However, the conductors shall be pieced-out with conductors having the same gauge and type and color of insulation. The conductors used for piecing-out shall be from cables having RUS acceptance.

(10) *Splice organization.* Spliced pair bundles shall be arranged in firm lay-ups with minimum conductor tension in accordance with the manufacturer's instructions.

(11) *Binder tape.* Perforated nonhygroscopic and nonwicking binder tape should be applied to splices housed in filled splice cases. The binder tape allows the flow of filling compound while holding the splice bundles near the center of the splice case to allow adequate coverage of filling compound.

(12) *Cable tags.* Cables shall be identified by a tag indicating the cable manufacturer's name, cable size, date of placement, and generic route information. Information susceptible to changes caused by future cable throws and rearrangements should not be included. Tags on load coil stubs shall include the serial number of the coil case, the manufacturer's name, and the inductance value.

(13) *Screened cable.* Screened PIC cable is spliced in the same manner as nonscreened PIC cable. However, special considerations are necessary due to differences in the cable design. The transmit and receive bundles of the cable shall be separated and one of the bundles shall be wrapped with shielding material in accordance with the cable manufacturer's recommendations. When acceptable to the cable manufacturer, it is permissible to use either the scrap screening tape removed from the cable during the sheath opening process provided the screening tape is edge coated or new pressure sensitive aluminum foil tape over polyethylene tape.

(14) *Service wire connections.* (i) Buried service wires may be spliced directly to cable conductors inside pedestals using the same techniques required for branch cables. Buried service wires may also be terminated on terminal blocks inside pedestals in areas where high service order activity or fixed count cable administration policies require terminal blocks. However, only RUS accepted terminal blocks equipped with grease or gel filled terminations to provide moisture and corrosion resistance shall be used.

(ii) Only filled terminal blocks having RUS acceptance shall be used on aerial service wire connections.

(15) *Copper cable testing.* Copper cable testing shall be performed in accordance with RUS Bulletin 345–63, ''RUS Standard for Acceptance Tests and Measurements of Telephone Plant,'' PC–4, (Incorporated by reference at § 1755.97).

(16) *Cable acceptance.* Installed cable shall be tested and pass the inventory and acceptance testing specified in the Telephone System Construction Contract (Labor and Materials), RUS Form 515. The tests and inspections shall be witnessed by the borrower's resident project representative. All conductors shall be free from grounds, shorts, crosses, splits, and opens.

(d) *Splice arrangements for copper cables*—(1) *Service distribution closures.* (i) Ready access closures permit cable splicing activities and the installation of filled terminal blocks for service wire connections in the same closure. Ready access designs shall allow service technicians direct access to the cable core as well as the terminal block.

(ii) Fixed count terminals shall restrict service technician access to the cable core. Predetermined cable pairs shall be spliced to the terminal leads or stub cable in advance of service assignments.

(2) *Aerial splices.* Aerial splice cases accommodate straight splices, branch splices, load coils, and service distribution terminals. Aerial splicing arrangements having more than 4 cables spliced in the same splice case are not recommended. Stub cabling to a second splice case to avoid a congested splice is acceptable.

(3) *Buried splices.* (i) Direct buried splice cases accommodate straight splices, branch splices, and load coils. Direct buried splices shall be filled and shall be used only when above ground splicing in pedestals is not practicable.

(ii) A treated plank or equivalent shall be placed 15 cm (6 in.) above the buried splice case to prevent damage to the splice case from future digging. Where a firm base for burying a splice cannot be obtained, a treated plank or equivalent shall be placed beneath the splice case.

(iii) Each buried splice shall be identified for future locating. One method of marking the splice point is the use of a warning sign. Another method is the burying of an electronic locating device.

(4) *BD-type pedestals.* (i) BD-type pedestals are housings primarily intended to house, organize, and protect cable terminations incorporating splice connectors, ground lugs, and load coils. Activities typically performed in pedestals are cable splicing, shield bonding and grounding, loading, and connection of subscriber service drops.

(ii) The recommended splice capacities for BD-type pedestals are shown in Table 5. However, larger size pedestals are permissible if service requirements dictate their usefulness. Table 5 is as follows:

TABLE 5.—SPLICE CAPACITIES FOR BD-TYPE PEDESTALS

Pedestal type	Maximum straight splice maximum load splice pair capacity using single pair connectors or multiple pair splice modules	Maximum load splice pair capacity using single pair connectors or multiple pair splice modules (see note 1)
BD3, BD3A	100 Pair	50 Pair.

TABLE 5.—SPLICE CAPACITIES FOR BD-TYPE PEDESTALS—Continued

Pedestal type	Maximum straight splice maximum load splice pair capacity using single pair connectors or multiple pair splice modules	Maximum load splice pair capacity using single pair connectors or multiple pair splice modules (see note 1)
BD4, BD4A	200 Pair	100 Pair.
BD5, BD5A	600 Pair	300 Pair.
BD7	1200 Pair	600 Pair.
BD14, BD14A ...	100 Pair	50 Pair.
BD15, BD15A ...	400 Pair	200 Pair.
BD16, BD16A ...	600 Pair	300 Pair.

Note 1: This table refers to load coil cases that are to be direct buried with stub cables extending into the pedestal for splicing. Requirements involving individual coil arrangements inside the pedestal should be engineered on a case-by-case basis.

(iii) Special distribution pedestals having a divider plate for mounting filled terminal blocks are available. Distribution pedestals are also equipped with service wire channels for installation of buried service wires without disturbing the cabling and gravel inside the base of the pedestal. Distribution pedestals are recommended in locations where the connection of service wires is required.

(5) *Large pair count splice housings.* Large pair count splice housings are recommended for areas not suitable for man- holes. The recommended capacities are shown in Table 6:

TABLE 6.—SPLICE CAPACITIES FOR LARGE COUNT HOUSINGS

Housing type	Maximum straight splice pair capacity using single pair connectors or multiple pair splice modules	Maximum load splice pair capacity using single pair connectors or multiple pair splice modules (see note 1)
BD 6000 ..	6,000 Pair	3,000 Pair.
BD 8000 ..	8,000 Pair	4,000 Pair.
BD 10000	10,000 Pair	5,000 Pair.

(6) *Pedestal restricted access inserts.* Restricted access inserts may be used to protect splices susceptible to unnecessary handling where subsequent work activities are required or expected to occur after splices have been completed. Restricted access inserts also provide moisture protection in areas susceptible to temporary flooding. A

typical restricted access insert is shown in Figure 1:

BILLING CODE 3410–15–P

FIGURE 1

PEDESTAL RESTRICTED ACCESS INSERT

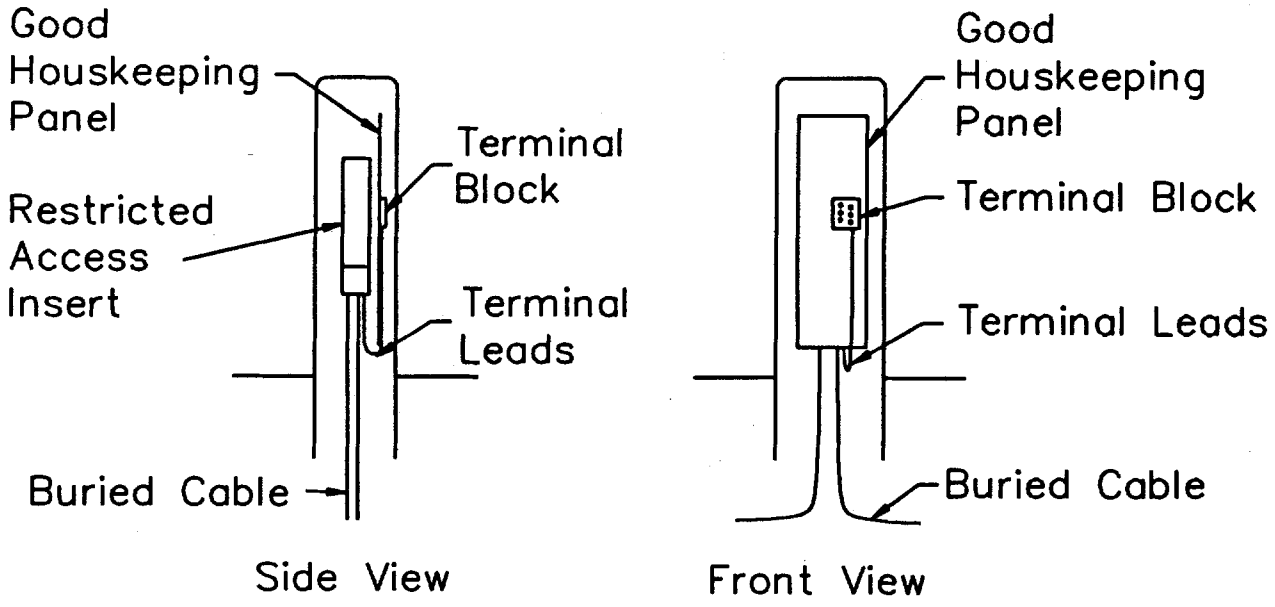

BILLING CODE 3410–15–C

(7) *Serving Area Interface (SAI) Systems.* SAI systems provide the cross-connect point between feeder and distribution cables. Connection of feeder to distribution pairs is accomplished by placing jumpers between connecting blocks. Only RUS accepted connecting blocks having grease or gel filled terminations to provide moisture and corrosion resistance shall be used.

(8) *Buried cable splicing arrangements.* Typical buried cable splicing arrangements are illustrated in Figures 2 through 5:

BILLING CODE 3410–15–P

FIGURE 2

SERVICE WIRE CONNECTION TO BURIED CABLE

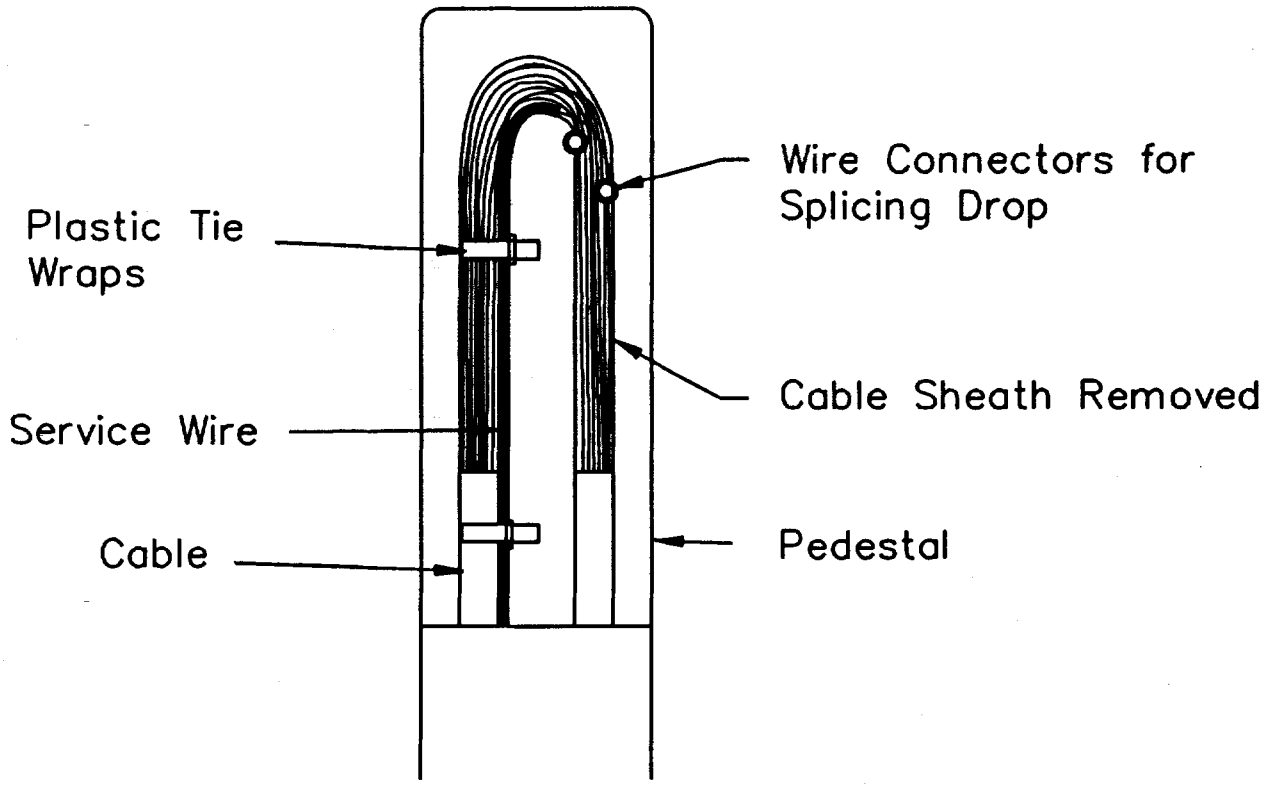

Note: See Figures 13 through 16 for cable tags, tie wraps, and bonding and grounding details.

FIGURE 3

TYPICAL SPLICE USING SINGLE PAIR CONNECTORS

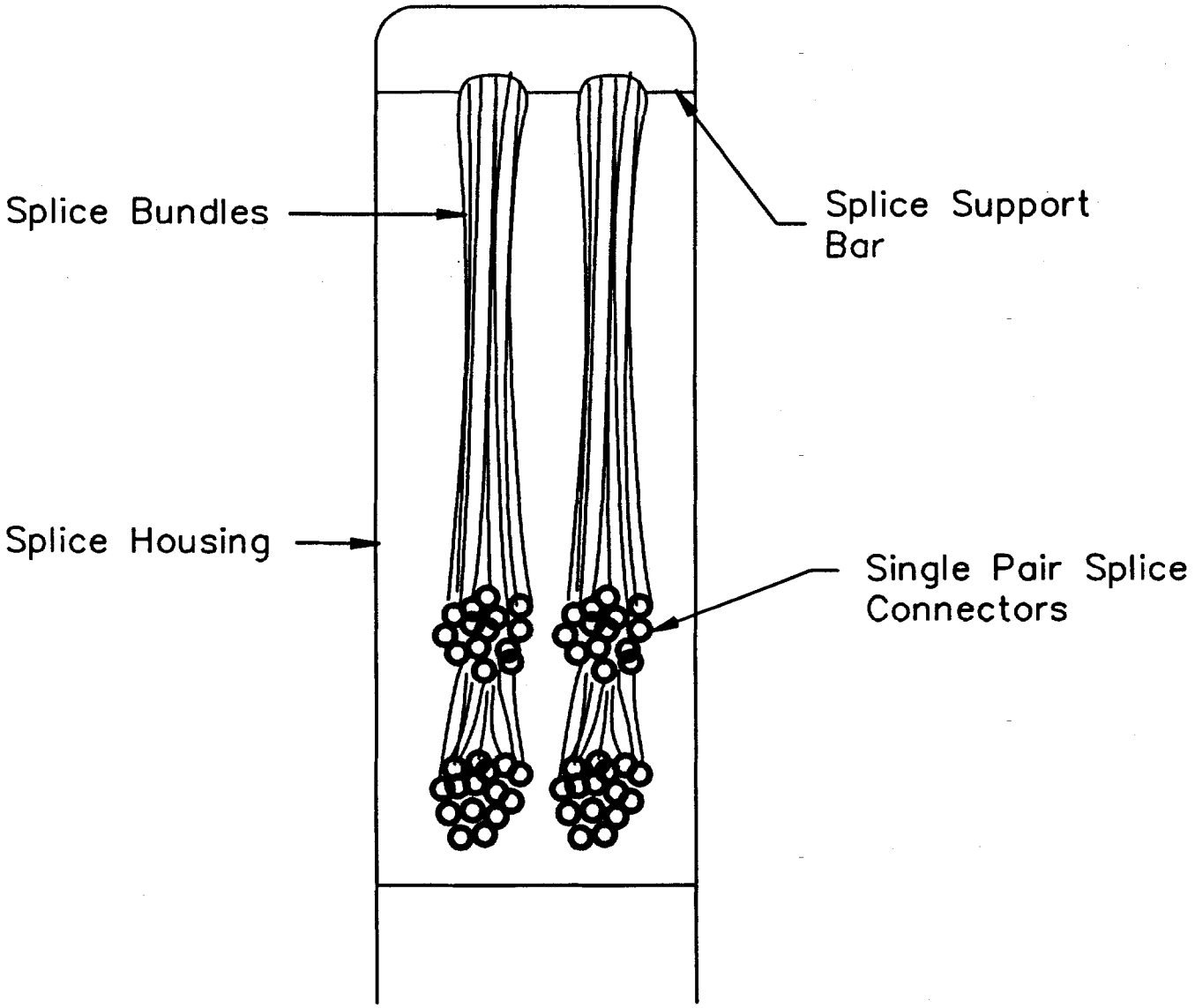

Note: Cable tags, bonding and grounding details, and plastic tie wraps have been omitted for clarity. See Figures 13 through 16 for cable tags, tie wraps, and bonding and grounding details.

FIGURE 4

LARGE SPLICE USING MULTIPLE PAIR CONNECTORS

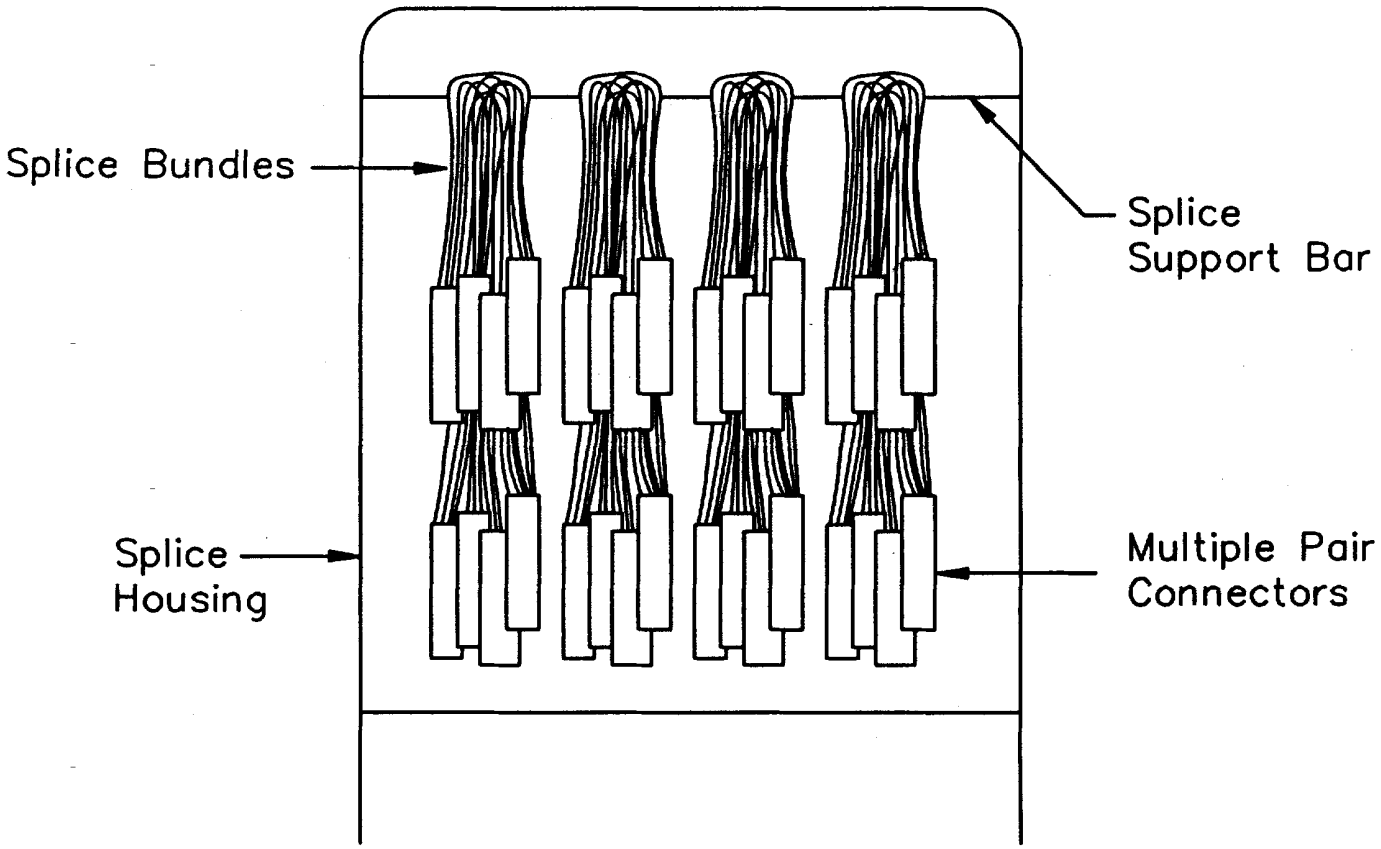

Note: Cable tags, bonding and grounding details, and plastic tie wraps have been omitted for clarity. See Figures 13 through 16 for cable tags, tie wraps, and bonding and grounding details.

FIGURE 5

LARGE SPLICE USING MULTIPLE PAIR CONNECTORS MOUNTED ON ORGANIZER RACKS

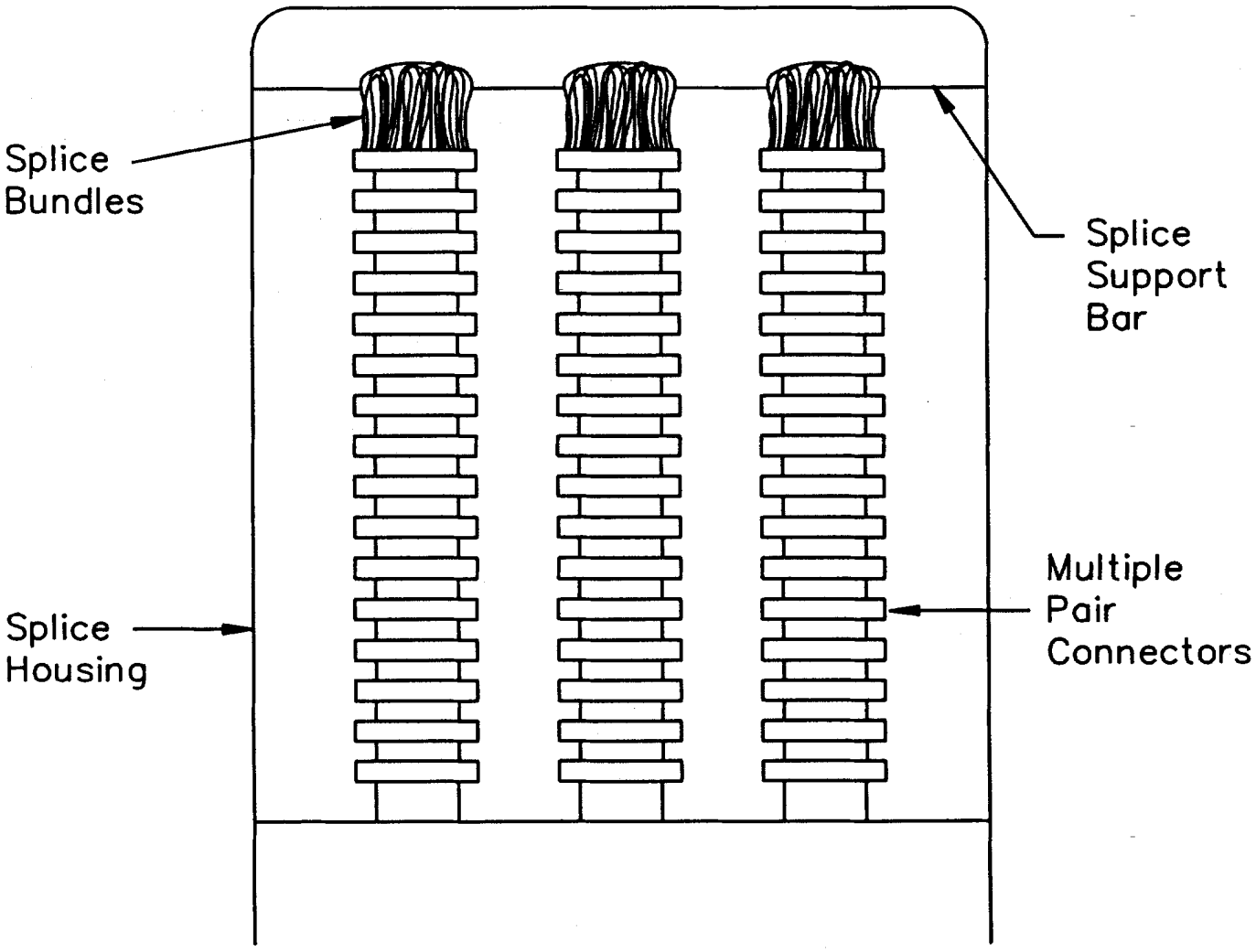

Note: Cable tags, bonding and grounding details, and plastic tie wraps have been omitted for clarity. See Figures 13 through 16 for cable tags, tie wraps, and bonding and and grounding details.

BILLING CODE 3410–15–C

(9) *Underground splices (manholes).* Underground splice cases accommodate straight splices, branch splices, and load coils. Underground splices shall be filled.

(10) *Central office tip cable splices.* (i) Filled cable or filled splices are not recommended for use inside central offices, except in cable vault locations. Outside plant cable sheath and cable filling compound are susceptible to fire and will support combustion. Fire, smoke, and gases generated by these materials during burning are detrimental to telephone switching equipment.

(ii) Tip cables should be spliced in a cable vault. However, as a last resort, tip cables may be spliced inside a central office if flame retardant splice cases or a noncombustible central office splice housing is used to contain the splice.

(iii) Splices inside the central office shall be made as close as practical to the point where the outside plant cables enter the building. Except in cable vault locations, outside plant cables within the central office shall be wrapped with fireproof tape or enclosed in noncombustible conduit.

(e) *Splicing considerations for fiber optic cables*—(1) *Connection characteristics.* Splicing efficiency between optical fibers is a function of light loss across the fiber junctions measured in decibels (dB). A loss of 0.2 dB in a splice corresponds to a light transmission efficiency of approximately 95.5 percent.

(2) *Fiber core alignment.* Fiber splicing techniques shall be conducted in such a manner that the cores of the fibers will be aligned as perfectly as possible to allow maximum light transmission from one fiber to the next. Without proper alignment, light will leave the fiber core and travel through the fiber cladding. Light outside the fiber core is not a usable light signal. Core misalignment is illustrated in Figure 6:

BILLING CODE 3410–15–P

FIGURE 6
CORE MISALIGNMENT

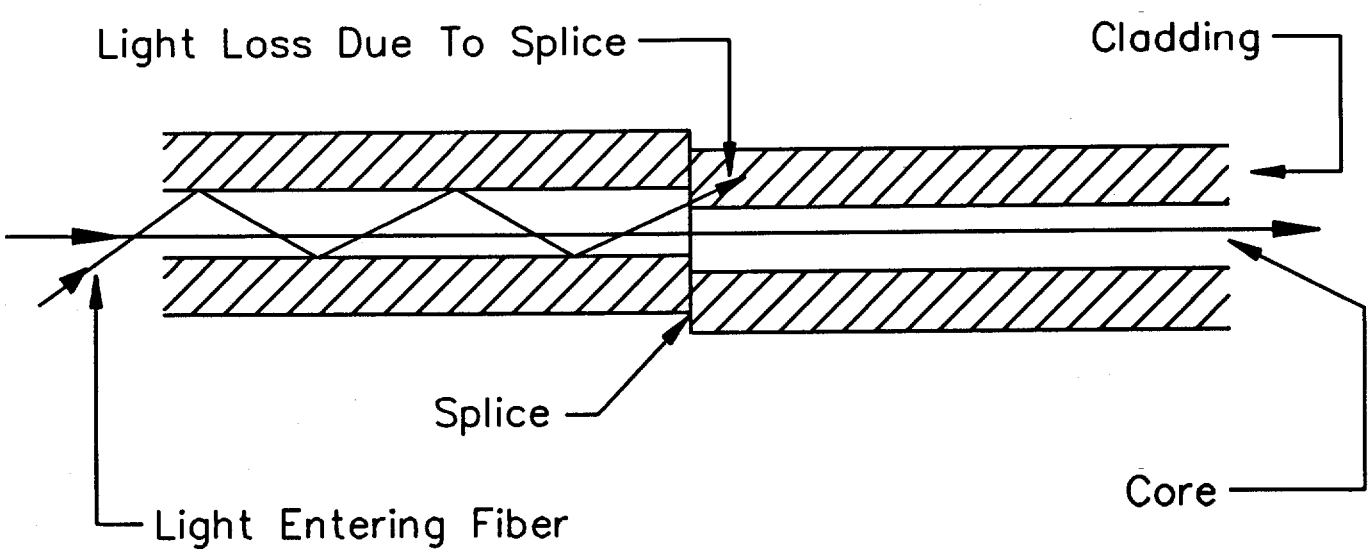

BILLING CODE 3410–15–C

(3) *Splice loss.* (i) Splice loss can also be caused by fiber defects such as nonidentical core diameters, cores not in center of the fiber, and noncircular cores. Such defects are depicted in Figure 7:

BILLING CODE 3410–15–P

FIGURE 7

SPLICE LOSS CAUSED BY FIBER MANUFACTURE

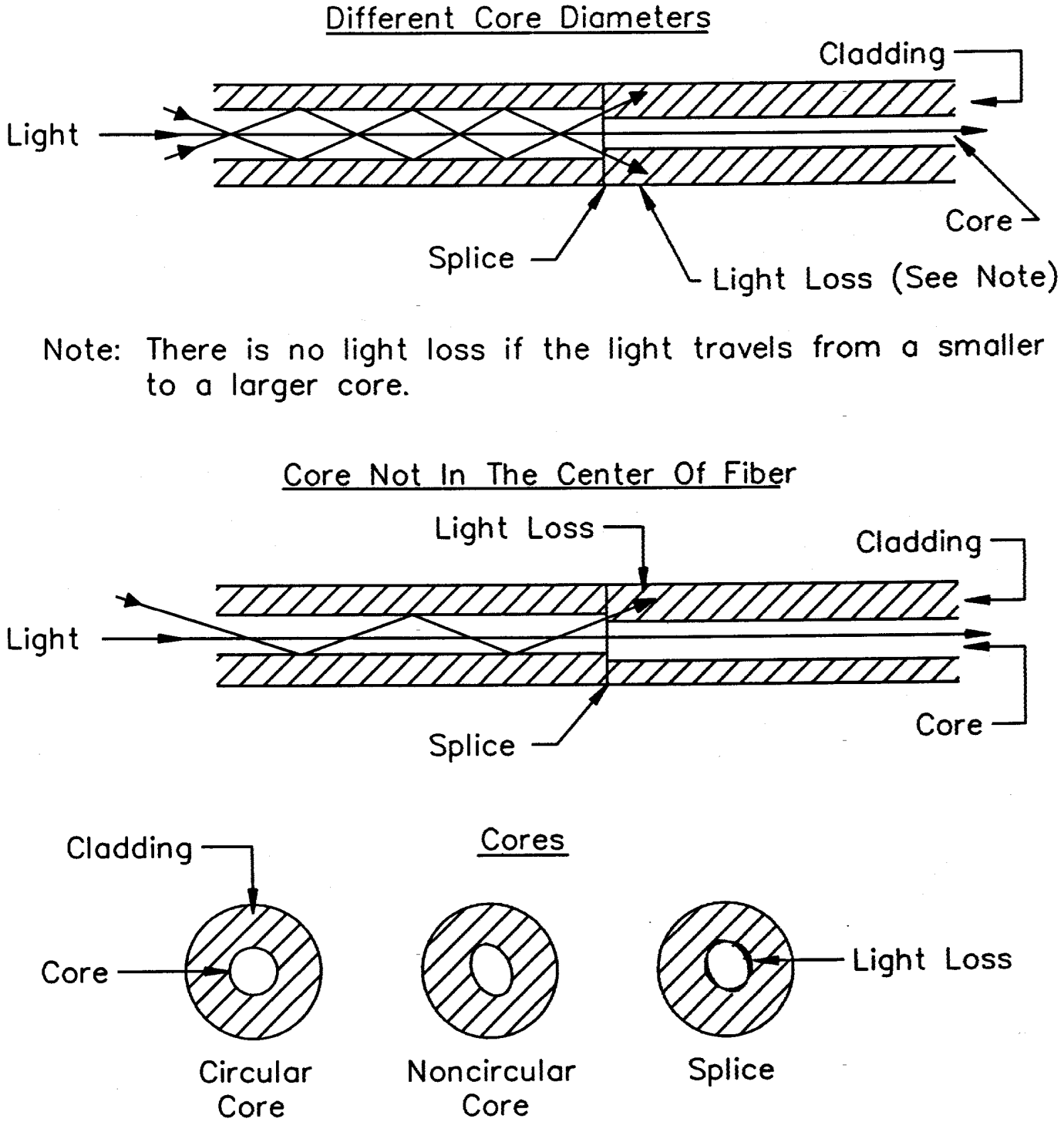

BILLING CODE 3410–15–C

(ii) Undesirable splice losses are caused by poor splicing techniques including splicing irregularities such as improper cleaves and dirty splices.

Typical cleave problems are illustrated in Figure 8:

BILLING CODE 3410–15–P

FIGURE 8

IMPROPER CLEAVES VERSUS PROPER CLEAVE

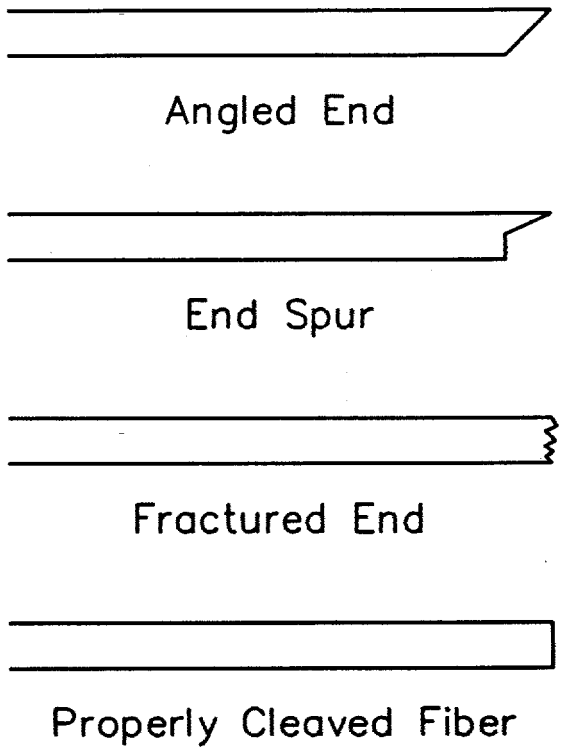

BILLING CODE 3410–15–C

(4) *Handling precautions.* The following precautions shall be observed:

(i) Avoid damaging the cable during handling operations prior to splicing. Minor damage may change the transmission characteristics of the fibers to the extent that the cable section will have to be replaced;

(ii) The cable manufacturer's recommendations concerning pulling tension shall be observed. The maximum pulling tension for most fiber optic cable is 2669 newtons (600 pound-force);

(iii) The cable manufacturer's recommendations concerning bending radius shall be observed. Unless the cable manufacturer's recommendation is more stringent, the minimum bending radius for fiber optic cable shall be 20 times the cable diameter;

(iv) The cable manufacturer's recommendations concerning buffer tube bending radius shall be observed. Unless the cable manufacturer's recommendation is more stringent, the minimum bending radius for buffer tubes is usually between 38 millimeters (mm) (1.5 in.) and 76 mm (3.0 in.). The bending limitations on buffer tubes are intended to prevent kinking. Buffer tube kinking may cause excessive optical loss or fiber breakage; and

(v) Handle unprotected glass fibers carefully to avoid introducing flaws such as scratched or broken fibers.

(5) *Personnel safety.* The following safety precautions shall be observed:

(i) Safety glasses shall be worn when handling glass fibers;

(ii) Never view open-ended fibers with the naked eye or a magnifying device. Improper viewing of a fiber end that is transmitting light may cause irreparable eye damage; and

(iii) Dispose of bare scrap fibers by using the sticky side of a piece of tape to pick up and discard loose fiber ends. Fiber scraps easily penetrate the skin and are difficult to remove.

(6) *Equipment requirements.* (i) Fiber optic splices shall be made in areas where temperature, humidity, and cleanliness can be controlled. Both fusion and mechanical splicing techniques may require a splicing vehicle equipped with a work station that will allow environmental control.

(ii) Both fusion and mechanical splicing techniques are permitted on RUS financed projects. When using the mechanical splicing technique, only RUS accepted mechanical fiber optic splice connectors can be used.

(iii) Fusion splicing machines shall be kept in proper working condition. Regular maintenance in accordance with the machine manufacturer's recommendations shall be observed.

(iv) Mechanical splicing tools shall be in conformance with the tool manufacturer's recommendations.

(v) An optical time domain reflectometer (OTDR) shall be used for testing splices. The OTDR shall be stationed at the central office or launch point for testing individual splices as they are made and for end-to-end signature tests for the fiber optic link.

(vi) An optical power meter shall be used for end-to-end cable acceptance tests.

(vii) A prerequisite for the successful completion of a fiber optic splicing endeavor is the presence of a talk circuit between the splicing technician in the splicing vehicle and the operator of the OTDR in the central office. The splicing technician and the OTDR operator shall have access to communications with each other in order to inform each other as to:

(A) Which splices meet the loss objectives;

(B) The sequence in which buffer tubes and fibers are to be selected for subsequent splicing operations; and

(C) The timing required for the performance of OTDR testing to prevent making an OTDR test at the same time a splice is being fused.

(7) *Cable preparation.* (i) Engineering work prints shall prescribe the cable slack needed at splice points to reach the work station inside the splicing vehicle. Consideration should be given to the slack required for future maintenance activity as well as initial construction activities. The required slack may be different for each splice point, depending on the site logistics. However, the required slack is seldom less than 15 meters (50 feet). The amount of slack actually used shall be recorded for each splice point to assist future maintenance and restoration efforts.

(ii) The splice case manufacturer's recommendations concerning the amount of cable sheath to be removed shall be followed to facilitate splicing operations. The length of the sheath opening shall be identified with a wrap of plastic tape.

(iii) If the cable contains a rip cord, the cable jacket shall be ring cut approximately 15 cm (6 in.) from the end and the 15 cm (6 in.) of cable jacket shall be removed to expose the rip cord. The rip cord shall be used to slit the jacket to the tape mark.

(iv) If the cable does not contain a rip cord, the cable jacket shall be slit using a sheath splitter. No cuts shall be made into the cable core nor shall the buffer tubes be damaged.

(v) If the cable contains an armor sheath, the outer jacket shall be opened along the slit and the jacket shall be removed exposing the armor sheath. The armor shall be separated at the seam and pulled from the cable exposing the inner jacket. The armor shall be removed making allowances for a shield bond connector. The inner sheath shall be slit using a sheath splitter or rip cord. The cable core shall not be damaged nor shall there be any damage to the buffer tubes. The jacket shall be peeled back and cut at the end of the slit. The exposed buffer tubes shall not be cut, kinked, or bent.

(vi) After the cable sheath has been removed, the binder tape shall be removed from the cable. The cable shall not be crushed or deformed.

(vii) The buffer tubes shall be unstranded one at a time. The buffer tubes shall not be kinked.

(viii) If the cable is equipped with a strength member, the strength member shall be cut to the length recommended by the splice case manufacturer.

(ix) Each buffer tube shall be inspected for kinks, cuts, and flat spots. If damage is detected, an additional length of cable jacket shall be removed and all of the buffer tubes shall be cut off at the point of damage.

(x) The cable preparation sequence shall be repeated for the other cable end.

(8) *Shield bonding and grounding.* For personnel safety, the shields and metallic strength members of the cables to be spliced shall be bonded together and grounded before splicing activities are started. (See paragraphs (g)(4), and (g)(5)(i) through (g)(5)(iii) of this section for final bonding and grounding provisions).

(9) *Fiber optic color code.* The standard fiber optic color code for buffer tubes and individual fibers shall be as shown in Table 7:

TABLE 7.—FIBER AND BUFFER TUBE IDENTIFICATION

Buffer tube and fiber No.	Color
1	Blue.
2	Orange.
3	Green.
4	Brown.
5	Slate.
6	White.
7	Red.
8	Black.
9	Yellow.
10	Violet.
11	Rose.
12	Aqua.
13	Blue/Black Tracer.
14	Orange/Black Tracer.
15	Green/Black Tracer.
16	Brown/Black Tracer.
17	Slate/Black Tracer.
18	White/Black Tracer.

TABLE 7.—FIBER AND BUFFER TUBE IDENTIFICATION—Continued

Buffer tube and fiber No.	Color
19	Red/Black Tracer.
20	Black/Yellow Tracer.
21	Yellow/Black Tracer.
22	Violet/Black Tracer.
23	Rose/Black Tracer.
24	Aqua/Black Tracer.

(10) *Buffer tube removal.* (i) The splice case manufacturer's recommendation shall be followed concerning the total length of buffer tube to be removed. Identify the length to be removed with plastic tape.

(ii) Experiment with a scrap buffer tube to determine the cutting tool adjustment required to ring cut a buffer tube without damaging the fibers.

(iii) Buffer tubes shall be removed by carefully ring cutting and removing approximately 15 to 46 cm (6 to 18 in.) of buffer tube at a time. The process shall be repeated until the required length of buffer tube has been removed, including the tape identification marker.

(11) *Coated fiber cleaning.* (i) Each coated fiber shall be cleaned. The cable manufacturer's recommendations shall be followed concerning the solvent required to clean the coated fibers. Reagent grade isopropyl alcohol is a commonly used cleaning solvent.

(ii) A tissue or cotton ball shall be soaked in the recommended cleaning solvent and the coated fibers shall be carefully wiped one at a time using a clean tissue or cotton ball for each coated fiber. Caution shall be exercised to avoid removing the coloring agent from the fiber coating.

(12) *Fiber coating removal.* (i) Fiber coatings shall be removed. In accordance with the splicing method used, the splice case manufacturer's recommendation shall be followed concerning the length of fiber coating to be removed.

(ii) The recommended length of fiber coating shall be removed only on the two fibers to be spliced. Fiber coating removal shall be performed on a one-fiber-at-a-time basis as each splice is prepared.

(13) *Bare fiber cleaning.* After the fiber coating has been removed, the bare fibers shall be cleaned prior to splicing. Each fiber shall be wiped with a clean tissue or cotton ball soaked with the cleaning solvent recommended by the cable manufacturer. The bare fiber shall be wiped one time to minimize fiber damage. Aggressive wiping of bare fiber shall be avoided as it lowers the fiber tensile strength.

(14) *Fiber cleaving.* Cleaving tools shall be clean and have sharp cutting edges to minimize fiber scratches and improper cleave angles. Cleaving tools that are recommended by the manufacturer of the splicing system shall be used.

(15) *Cleaved fiber handling.* The cleaved and cleaned fiber shall not be allowed to touch other objects and shall be inserted into the splicing device.

(16) *Completion of the splice.* (i) In accordance with the method of splicing selected by the borrower, the splice shall be completed by either fusing the splice or by applying the mechanical connector.

(ii) Each spliced fiber shall be routed through the organizer tray one at a time as splices are completed. The fibers shall be organized one at a time to prevent tangled spliced fibers. The splice case manufacturer's recommendation shall be followed concerning the splice tray selection.

(17) *Fiber optic testing.* Fiber optic testing shall be performed in accordance with RUS Bulletin 345–63, ''RUS Standard for Acceptance Tests and Measurements of Telephone Plant,'' PC–4, (Incorporated by reference at § 1755.97).

(18) *Cable acceptance.* Installed cable shall be tested and pass the inventory and acceptance testing specified in the Telephone System Construction Contract (Labor and Materials), RUS Form 515. The tests and inspections shall be witnessed by the borrower's resident project representative.

(f) *Splice arrangements for fiber optic cables*—(1) *Aerial splices.* Cable slack at aerial splices shall be stored either on the messenger strand, on the pole, or inside a pedestal at the base of the pole. A typical arrangement for the storage of slack cable at aerial splices is shown in Figure 9:

BILLING CODE 3410–15–P

FIGURE 9

AERIAL SPLICE STORED INSIDE PEDESTAL

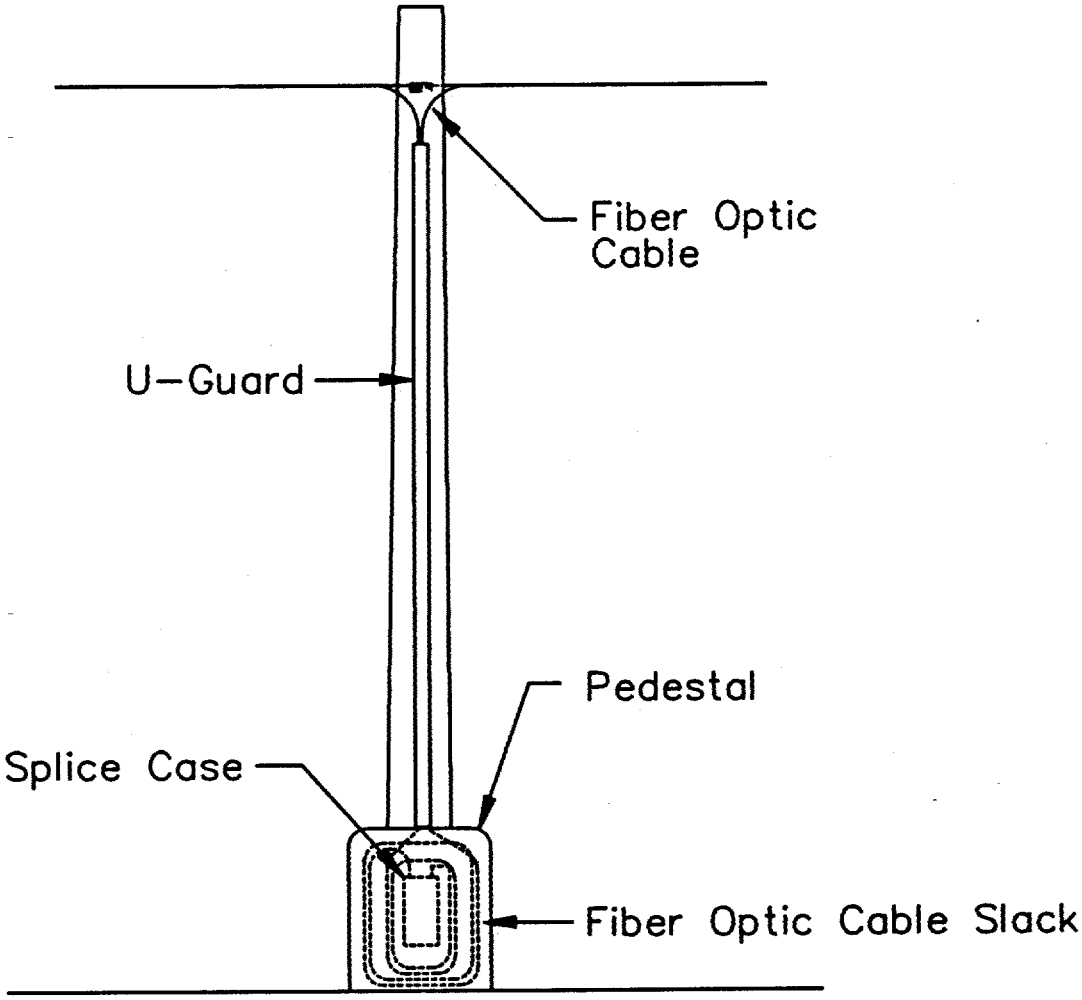

Note: See Figure 11 for details concerning storage of splice case inside pedestal.

BILLING CODE 3410–15–C

(2) *Buried splices.* Buried splices shall be installed in handholes to accommodate the splice case and the required splicing slack. An alternative to the handhole is a pedestal specifically designed for fiber optic splice cases. Typical arrangements for buried cable splices are shown in Figures 10 and 11:

BILLING CODE 3410–15–P

FIGURE 10

BURIED SPLICE STORED INSIDE HANDHOLE

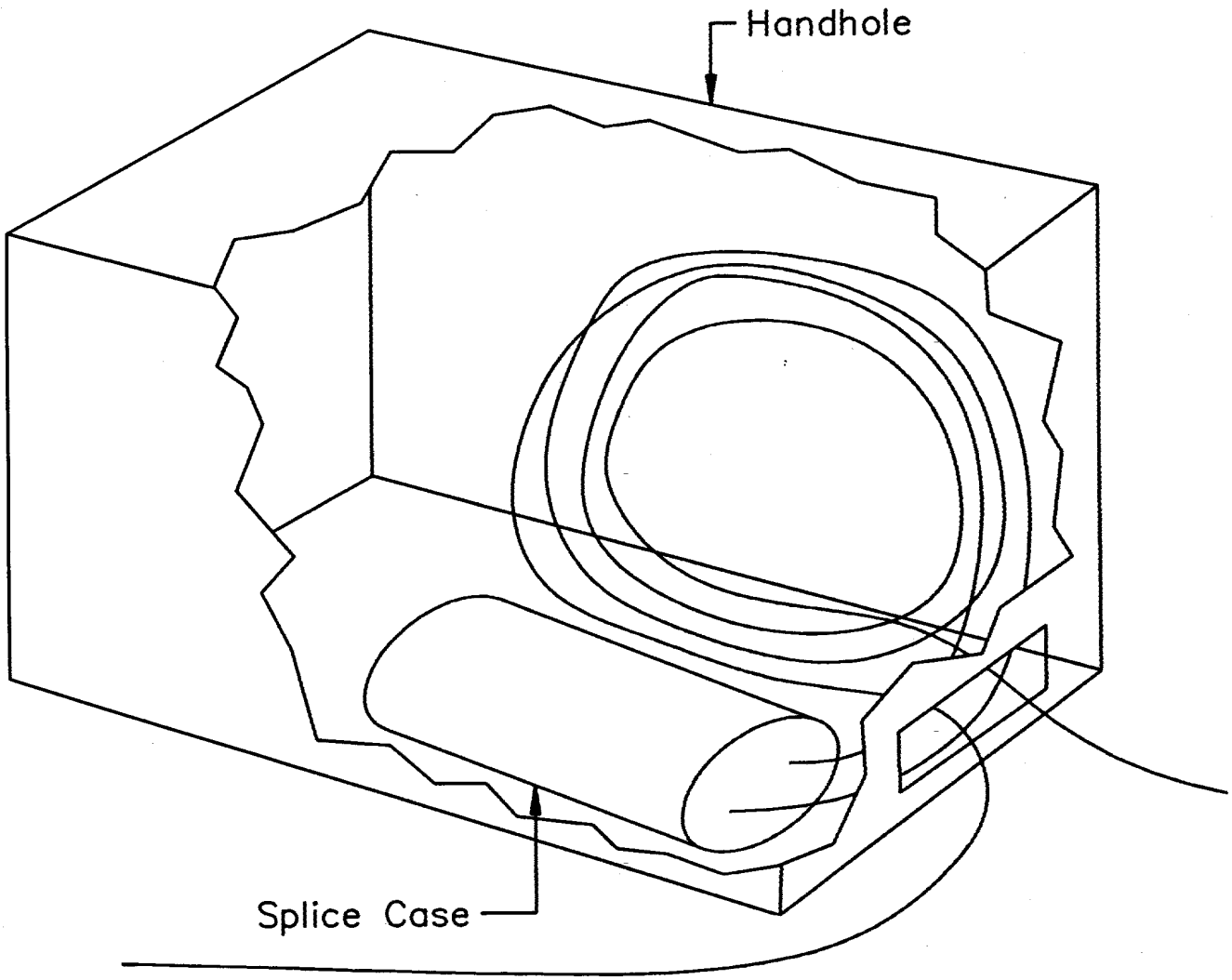

Note: Ground wires omitted for clarity. See Figure 19 for bonding and grounding details.

FIGURE 11

BURIED SPLICE STORED INSIDE PEDESTAL HOUSING

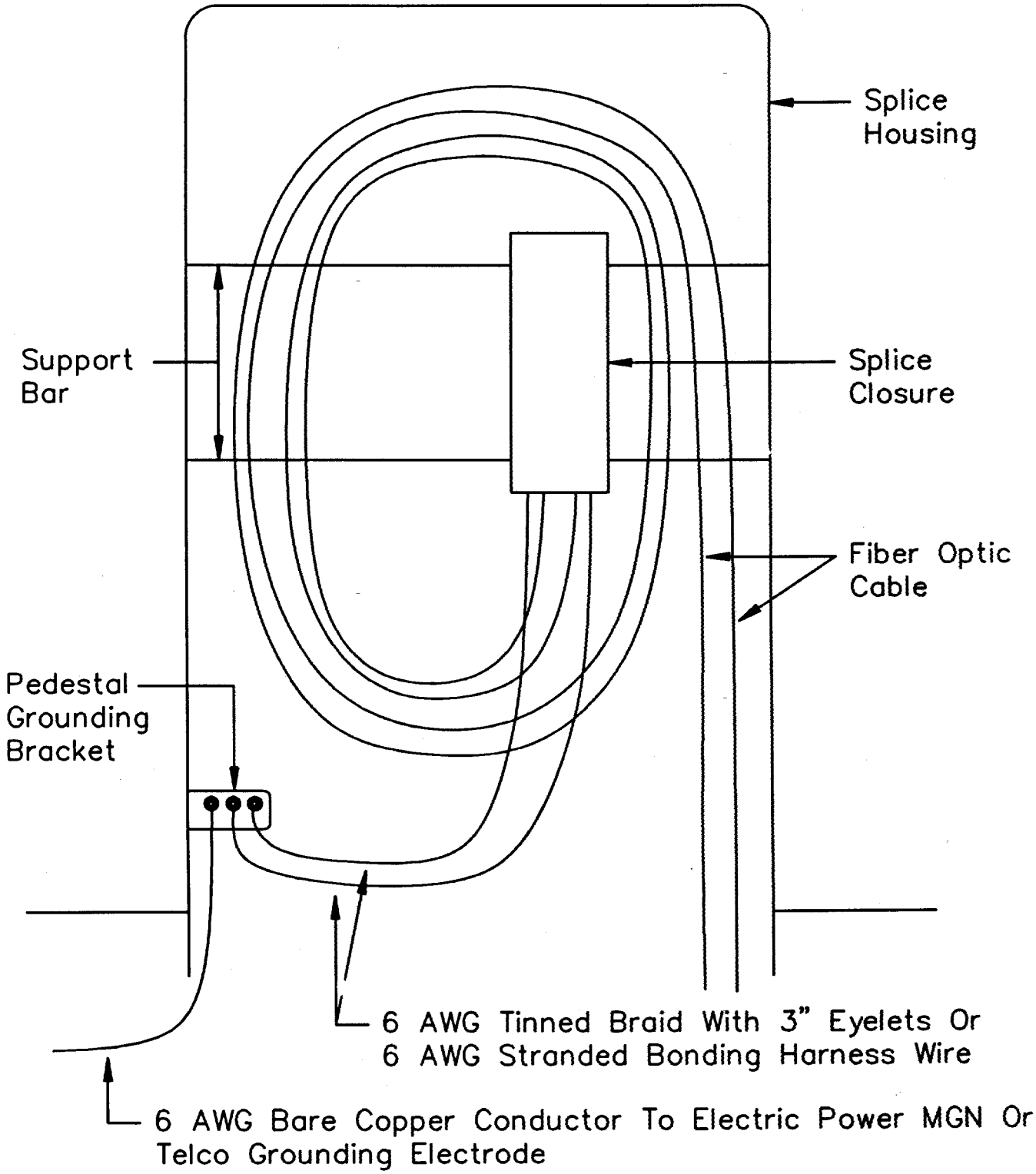

BILLING CODE 3410–15–P

(3) *Underground manhole splices.* Underground splices shall be stored in manholes on cable hooks and racks fastened to the manhole wall. The cable slack shall be stored on cable hooks and racks as shown in Figure 12:

BILLING CODE 3410–15–P

FIGURE 12
MANHOLE SPLICE STORAGE

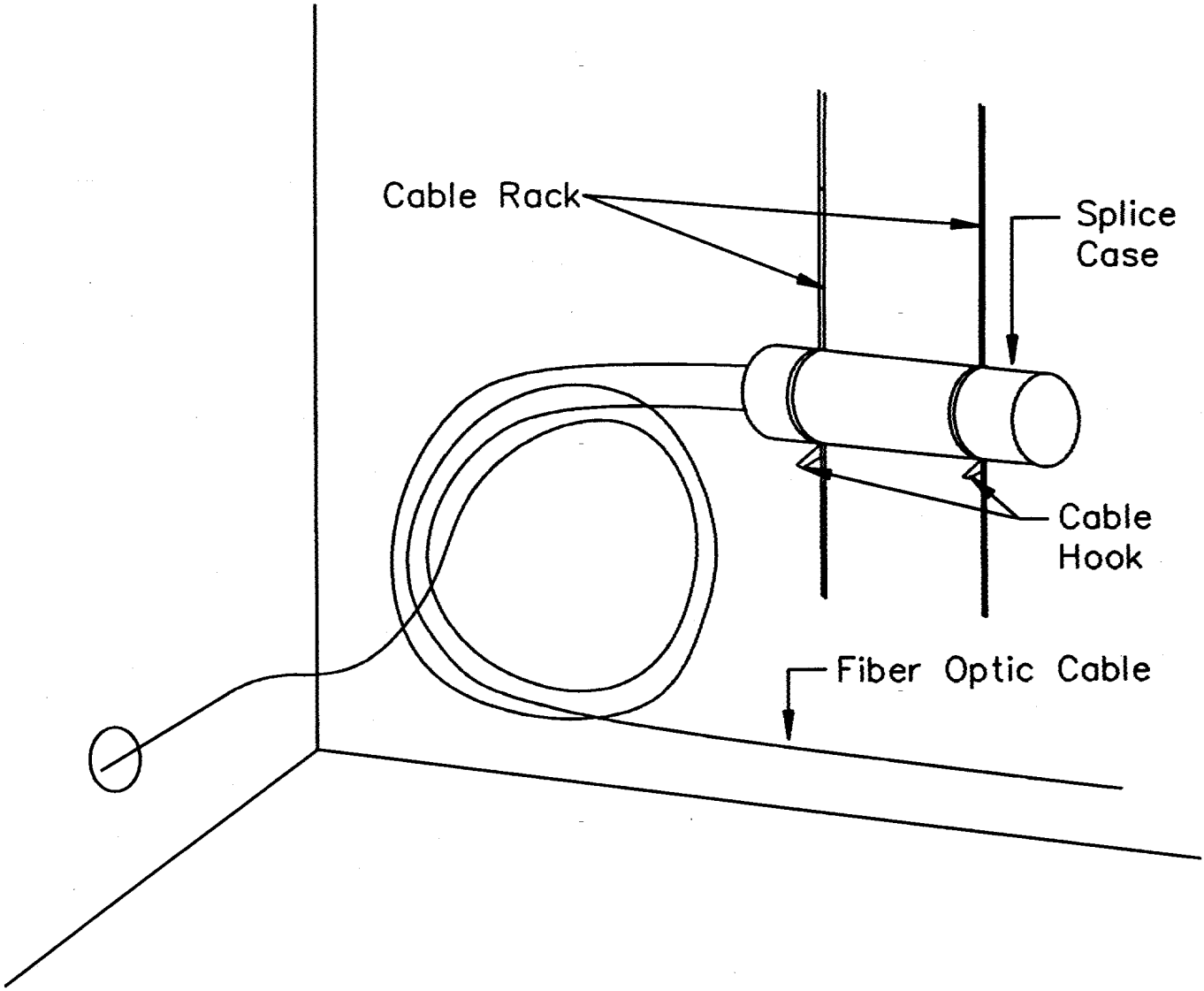

BILLING CODE 3410–15–C

(4) *Central office cable entrance.* (i) Filled cable or filled splices are not recommended for use inside central offices except in cable vault locations. Outside plant cable sheath and cable filling compound are susceptible to fire and will support combustion. Fire, smoke, and gases generated by these materials during burning are detrimental to telephone switching equipment.

(ii) As a first choice, the outside plant fiber optic cable shall be spliced to an all-dielectric fire retardant cable in a cable vault with the all-dielectric cable extending into the central office and terminating inside a fiber patch panel.

(iii) As a second choice, the outside plant cable may be spliced inside the central office if a flame retardant fiber optic splice case or a noncombustible central office splice housing equipped with organizer trays is used to contain the splice.

(iv) In cases referenced in paragraphs (f)(4)(ii) and (f)(4)(iii) of this section, as a minimum the fire retardant all-dielectric cable used to provide the connection between the cable entrance splice and the fiber patch panel shall be listed as Communication Riser Cable (Type CMR) in accordance with Sections 800–50 and 800–51(b) of the 1993 National Electrical Code.

(v) Splices inside the central office shall be made as close as practicable to the point where the outside plant cables enter the building. Except in cable vault locations, outside plant cables within the central office shall be wrapped with fireproof tape or enclosed in noncombustible conduit.

(g) *Bonding and grounding fiber optic cable, copper cable, and copper service wire*—(1) *Bonding.* Bonding is electrically connecting two or more metallic items of telephone hardware to maintain a common electrical potential. Bonding may involve connections to another utility.

(2) *Copper cable shield bond connections.* (i) Cable shields shall be bonded at each splice location. Only RUS accepted cable shield bond connectors shall be used to provide bonding and grounding connections to metallic cable shields. The shield bond connector manufacturer's instructions shall be followed concerning installation and use.

(ii) (A) Shield bonding conductors shall be either stranded or braided tinned copper wire equivalent to a minimum No. 6 American Wire Gauge (AWG) and shall be RUS accepted. The conductor connections shall be tinned or of a compatible bimetallic design to avoid corrosion problems associated with dissimilar metals. The number of shield bond connectors required per pair size and gauge shall be as shown in Table 8:

TABLE 8.—SHIELD BOND CONNECTORS PER PAIR SIZE AND GAUGE

19 AWG	Pair size and gauge			No. of shield bond connectors
	22 AWG	24 AWG	26 AWG	
0–25	0–100	0–150	0–200	1
50–100	150–300	200–400	300–600	2
150–200	400–600	600–900	900–1500	3
300–600	900–1200	1200–2100	1800–3600	4

(B) It is permissible to strap across the shield bond connectors of several cables with a single length of braided wire. However, both ends of the braid shall be terminated on the pedestal ground bracket to provide a bonding loop. Shield bond connection methods for individual cables are shown in Figures 13 through 15, and the bonding of several cables inside a pedestal using the bonding loop is shown in Figure 16:

BILLING CODE 3410–15–P

FIGURE 13

BONDING AND GROUNDING CABLES INSIDE PEDESTALS

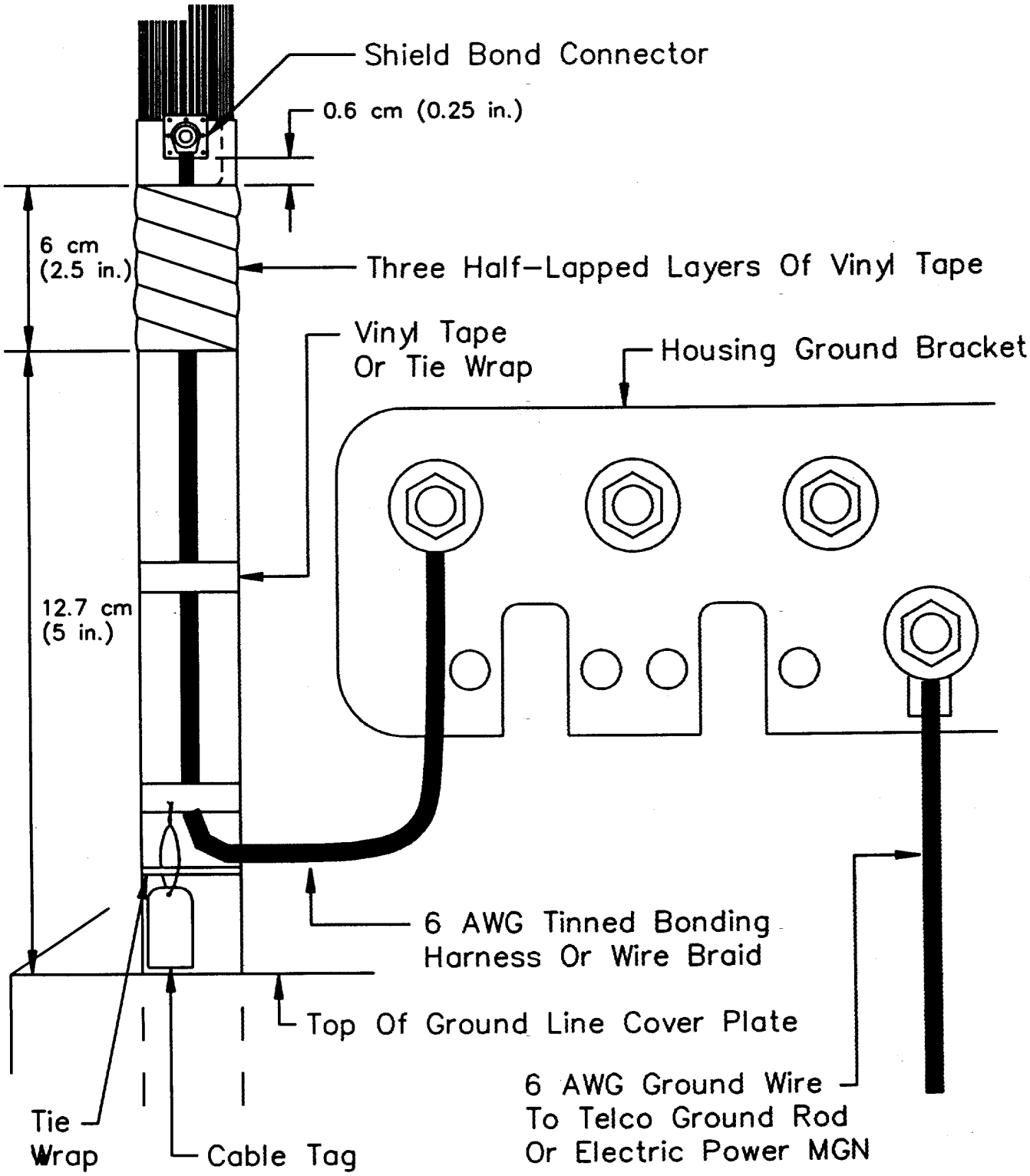

FIGURE 14

BONDING AND GROUNDING OF LARGE CABLES INSIDE PEDESTALS USING MULTIPLE SHIELD BOND CONNECTORS AND HARNESS WIRES

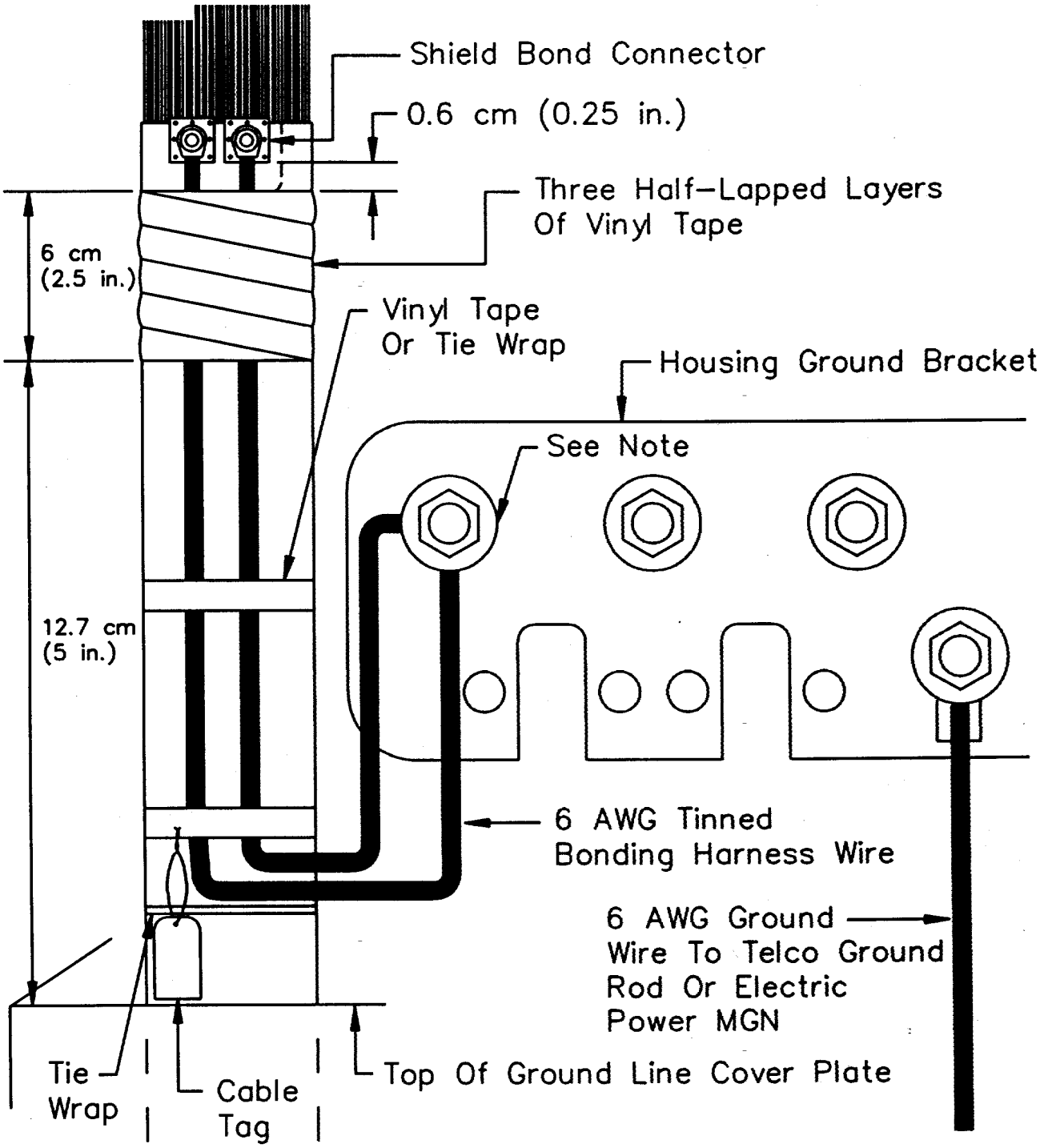

Note: The maximum number of harness wires that can be installed on each stud of the ground bracket shall be in accordance with the manufacturer's instructions.

FIGURE 15

ALTERNATIVE METHOD OF BONDING AND GROUNDING LARGE CABLES IN PEDESTALS USING MULTIPLE SHIELD BOND CONNECTORS AND 6 AWG WIRE BRAID

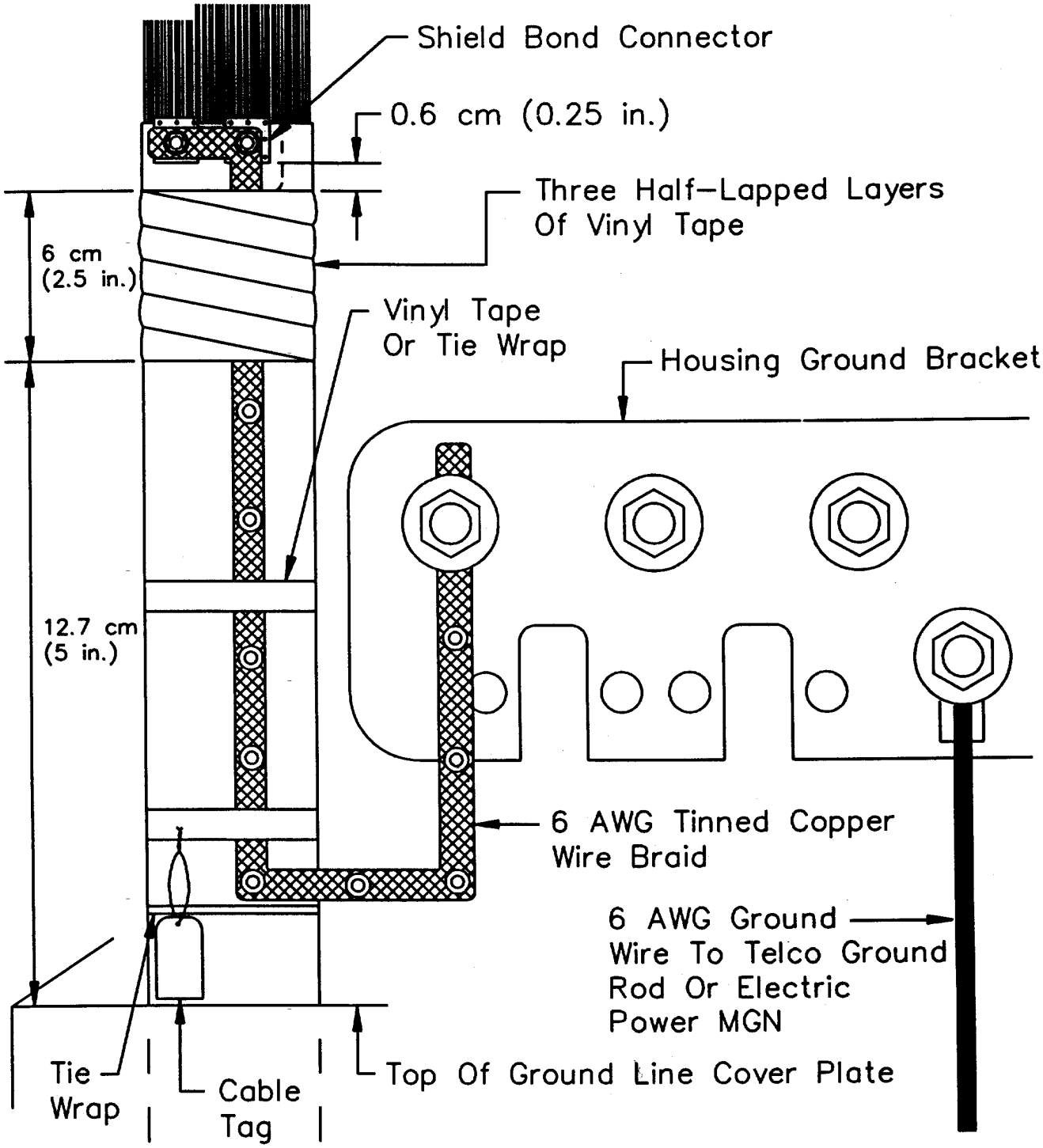

FIGURE 16

ALTERNATIVE METHOD OF BONDING AND GROUNDING SEVERAL CABLES IN PEDESTALS USING SHIELD BOND CONNECTORS AND 6 AWG WIRE BRAID LOOP

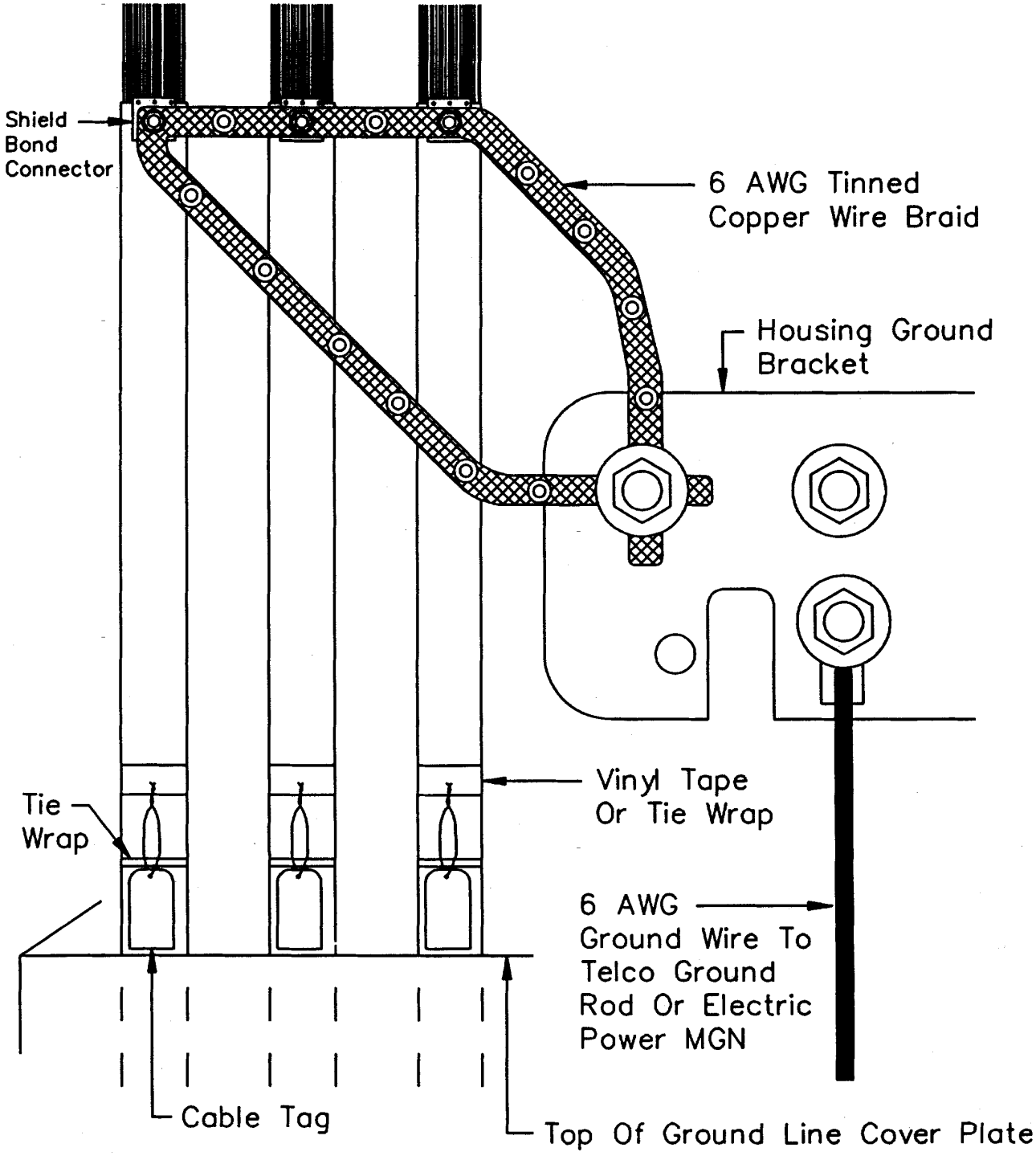

BILLING CODE 3410–15–C

(3) *Buried service wire shield bond connections.* Buried service wire shields shall be connected to the pedestal bonding and grounding system. Typical buried service wire installations are shown in Figures 17 and 18. In addition to the methods referenced in Figures 17 and 18, the shields of buried service wires may also be connected to the pedestal bonding and grounding system using buried service wire bonding harnesses listed on Page 3.3.1, Item ''gs-b,'' of RUS Bulletin 1755I–100. RUS Bulletin 1755I–100 may be purchased from the Superintendent of Documents, U.S. Government Printing Office, Washington, DC 20402. When those harnesses are used they shall be installed in accordance with the manufacturer's instructions. Figures 17 and 18 are as follows:

BILLING CODE 3410–15–P

FIGURE 17
GROUNDING SERVICE WIRE SHIELDS USING SERVICE WIRE CLAMP

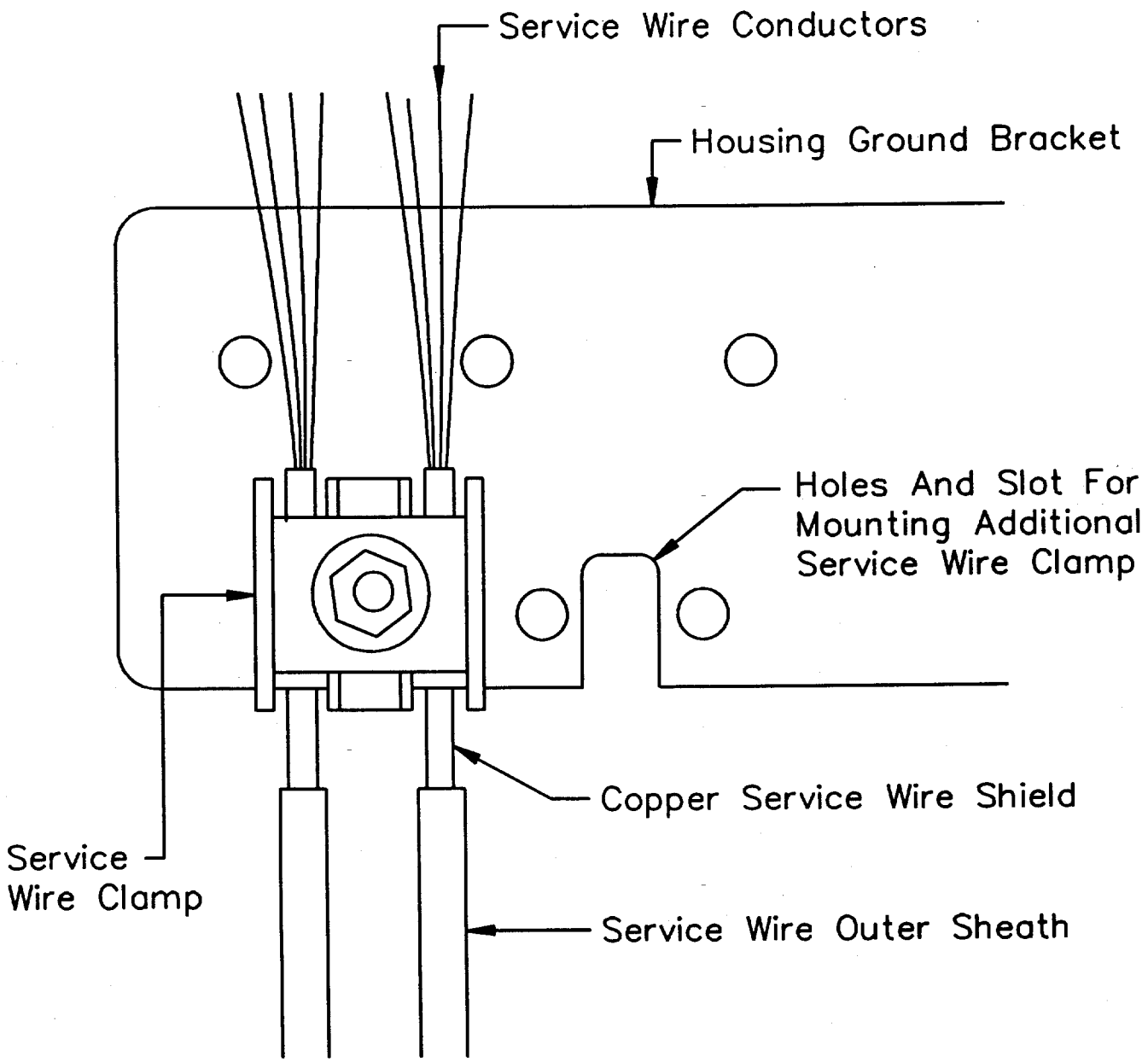

Note: Provide a loop in service drops to allow for movement of the drops without damage to the grounding connection.

FIGURE 18

ALTERNATIVE METHOD OF GROUNDING BURIED SERVICE WIRES INSIDE PEDESTALS

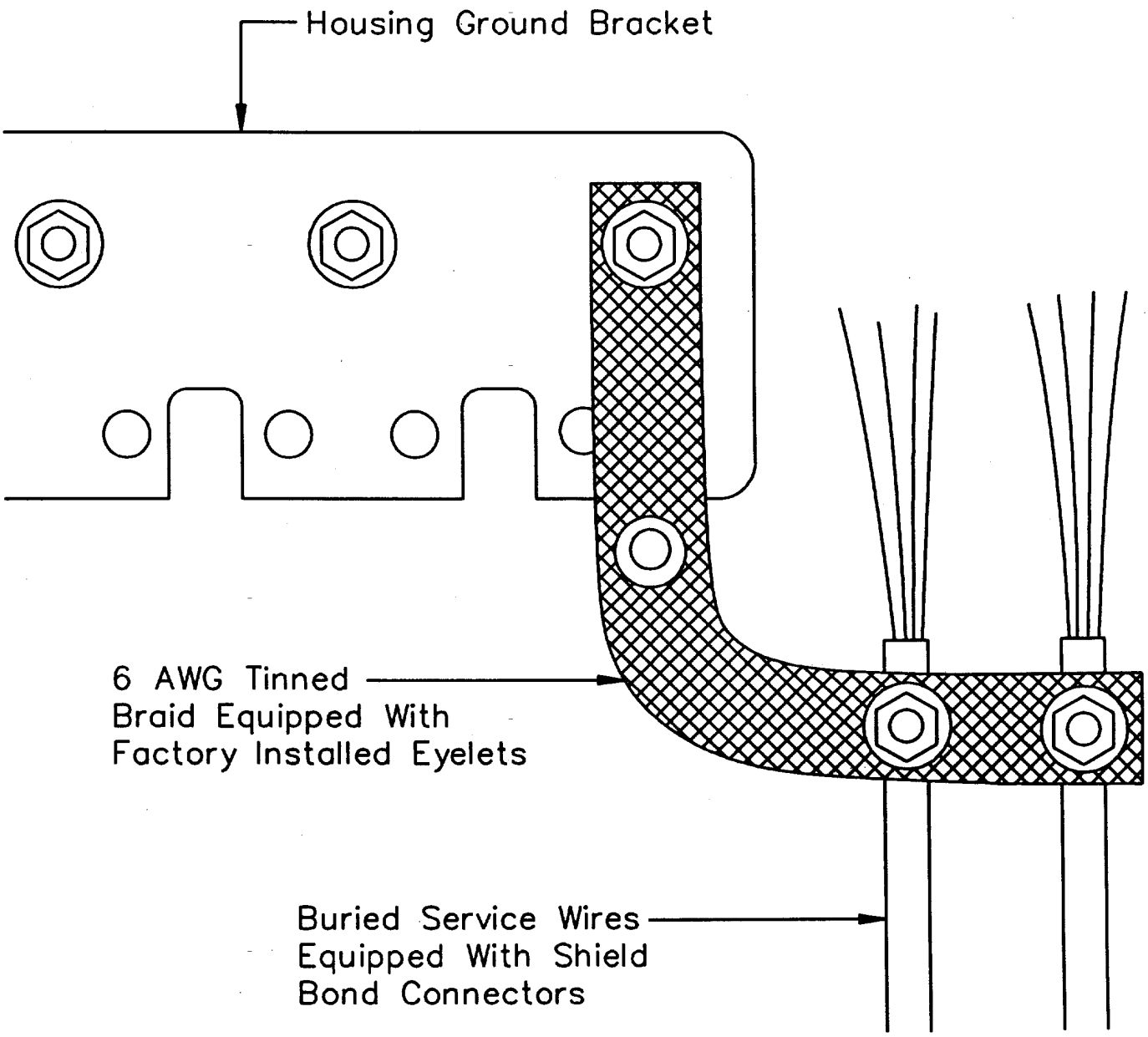

BILLING CODE 3410–15–C

(4) *Fiber optic cable bond connections.* (i) The cable shield and metallic strength members shall be bonded at each splice location. Only RUS accepted fiber optic cable shield bond connectors shall be used to provide bonding connections to the metallic cable shields. The shield bond connector manufacturer's instructions shall be followed concerning installation and use.

(ii) Shield bonding conductors shall be either stranded or braided tinned copper wire equivalent to a minimum No. 6 American Wire Gauge (AWG) and shall be RUS accepted. The conductor connections shall be tinned or of a compatible bimetallic design to avoid corrosion problems associated with dissimilar metals.

(5) *Grounding.* (i) Grounding is electrically connecting metallic telephone hardware to a National Electrical Safety Code (NESC) acceptable grounding electrode. Acceptable grounding electrodes are defined in the Rule 99A of the NESC.

(ii) The conductor used for grounding metallic telephone hardware shall be a minimum No. 6 AWG solid, bare, copper conductor.

(iii) For copper and fiber optic cable plant, all cable shields, all metallic strength members, and all metallic hardware shall be:

(A) Grounded at each splice location to a driven grounding electrode (ground rod) of:

(*1*) At least 1.5 meters (5 feet) in length where the local frost level is normally less than 0.30 meters (1 foot) deep; or

(*2*) At least 2.44 meters (8 feet) in length where the local frost level is normally 0.30 meters (1 foot) or deeper; and

(B) Bonded to a multi-grounded power system neutral when the splice is within 1.8 meters (6 feet) of access to the grounding system of the multi-grounded neutral system. Bonding to the multi-grounded neutral of a parallel power line may help to minimize telephone interference on long exposures with copper cable plant. Consideration, thus, should be given to completing such bonds, at least four (4) times each mile, when splices are greater than 1.8 meters (6 feet) but less than 4.6 meters (15 feet) from access to the multi-grounded neutral.

(6) *Bonding and grounding splice cases.* (i) Splice cases are equipped with bonding and grounding devices to ensure that cable shields and metallic strength members maintain electrical continuity during and after cable splicing operations. The splice case manufacturer's recommendations shall be followed concerning the bonding and grounding procedures. Conductors used for bonding shall be either stranded or braided tinned copper wire equivalent to 6 AWG. Conductors used for grounding shall be a solid, bare, copper wire equivalent to minimum No. 6 AWG.

(ii) Buried splice cases installed in either handholes or pedestals shall be grounded such that the cable shield grounds are attached to a common ground connection that will allow the lifting of a ground on the cable shield in either direction to permit efficient cable locating procedures. As a first choice, buried grounding conductor(s) shall be bare. However, if two or more grounding conductors are buried in the same trench, they shall be insulated to avoid shorts when a locating tone is applied.

(iii) A typical bonding and grounding method for fiber optic splices is shown in Figure 19:

BILLING CODE 3410–15–P

FIGURE 19

BONDING AND GROUNDING BURIED FIBER OPTIC SPLICES

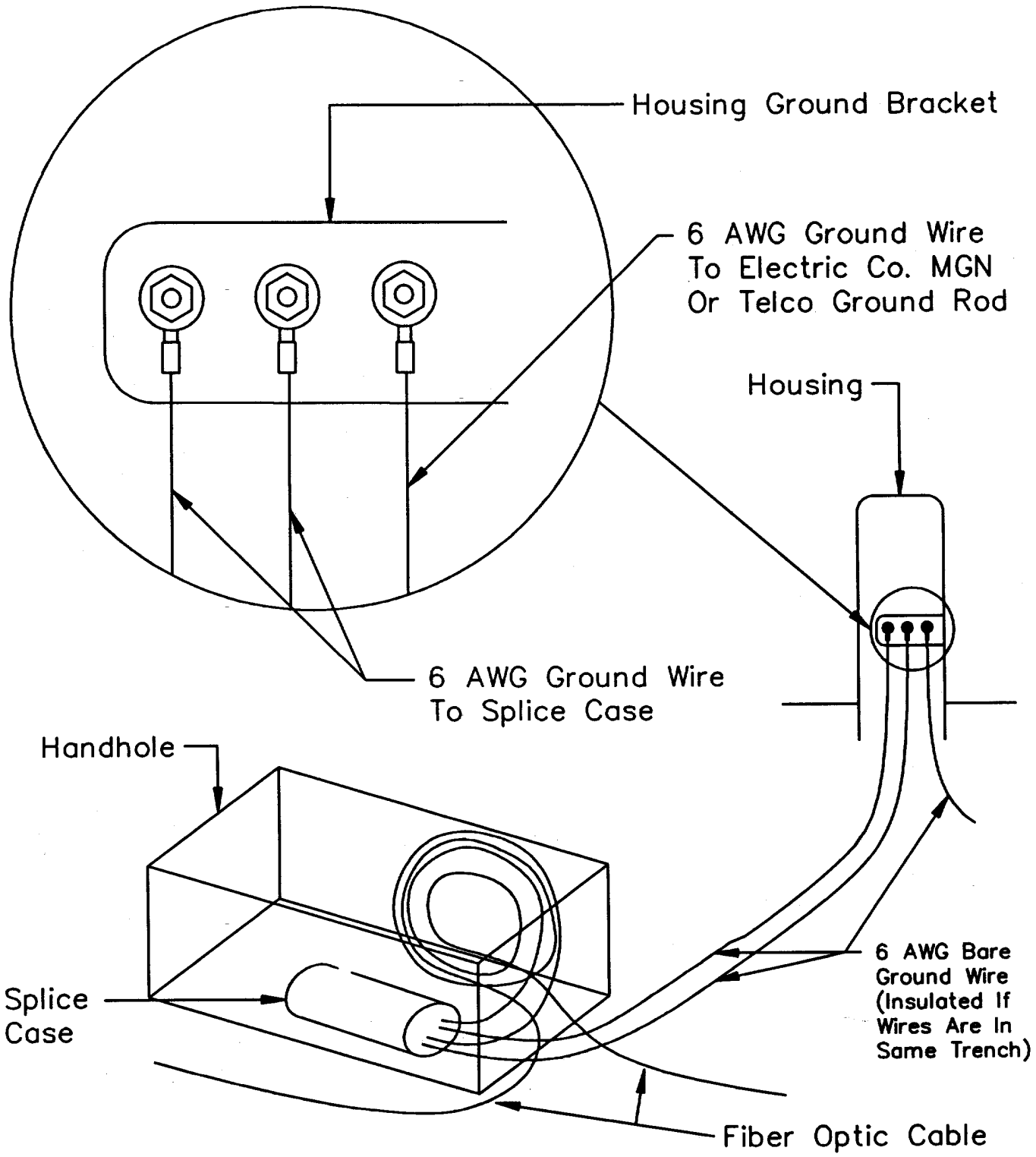

BILLING CODE 3410–15–C

(7) *Bonding and grounding central office cable entrances.* The RUS Telecommunications Engineering and Construction Manual (TE&CM) Section 810 provides bonding and grounding guidance for central office cable entrances. Splicing operations shall not be attempted before all metallic cable shield and strength members are bonded and grounded.

Dated: January 18, 1995.

Bob J. Nash,

Under Secretary, Rural Economic and Community Development.

[FR Doc. 95–1937 Filed 1–25–95; 8:45 am]

BILLING CODE 3410–15–P

Animal and Plant Health Inspection Service

9 CFR Part 92

[Docket No. 93–096–3]

Horses From Mexico; Quarantine Requirements

AGENCY: Animal and Plant Health Inspection Service, USDA.

ACTION: Final rule.

SUMMARY: We are amending the regulations regarding the importation of horses from Mexico to remove the requirement that such horses be quarantined for not less than 7 days in vector-proof quarantine facilities before being imported into the United States. This action is warranted because Mexico has reported no cases of Venezuelan equine encephalomyelitis (VEE) in over a year, and we have determined that horses imported from Mexico without a 7-day quarantine will not pose a risk of transmitting VEE to horses in the United States.

EFFECTIVE DATE: February 16, 1995.

FOR FURTHER INFORMATION CONTACT: Dr. Joyce Bowling, Staff Veterinarian, Import-Export Animals Staff, National Center for Import-Export, Veterinary Services, APHIS, USDA, P.O. Drawer 810, Riverdale, MD 20783. The telephone number for the agency contact will change when agency offices in Hyattsville, MD, move to Riverdale, MD, during February. Telephone: (301) 436–8170 (Hyattsville); (301) 734–8170 (Riverdale).

SUPPLEMENTARY INFORMATION:

Background

The regulations in 9 CFR part 92, referred to below as the regulations, govern the importation into the United States of specified animals and animal products, including horses from Mexico, to prevent the introduction into the United States of various animal diseases.

On September 22, 1994, we published in the **Federal Register** (59 FR 48576–48577, Docket No. 93–096–2) a proposal to amend the regulations to remove the requirement that horses imported into the United States from Mexico be quarantined for not less than 7 days in a vector-free facility.

We also proposed to remove the requirement in § 92.324 that horses from Mexico intended for importation into the United States through land border ports be quarantined in Mexico at a facility approved by the Administrator of the Animal and Plant Health Inspection Service (APHIS) and constructed so as to prevent the entry of mosquitoes and other hematophagous insects.

We solicited comments concerning the proposed rule for 60 days ending November 21, 1994. The one comment we received by that date supported the rule as written.

Therefore, based on the rationale set forth in the proposed rule, we are adopting the provisions of the proposal as a final rule without change. Although a 7-day quarantine will no longer be required, horses from Mexico intended for importation into the United States, except those to be imported for immediate slaughter, must still be quarantined at a designated port until they (1) test negative to an official test for dourine, glanders, equine piroplasmosis, and equine infectious anemia; and (2) test negative to any other tests that may be required by APHIS. Additionally, all horses intended for importation from Mexico must be quarantined until they are inspected and found free from communicable disease and fever-tick infestation.

Effective Date

This is a substantive rule that removes restrictions and, pursuant to the provisions of 5 U.S.C. 553, may be made effective less than 30 days after publication in the **Federal Register**.

This rule removes the requirement that horses imported from Mexico be quarantined for 7 days at vector-proof quarantine facilities. This requirement is no longer necessary, due to the elimination of VEE in Mexico. Therefore, the Administrator of the Animal and Plant Health Inspection Service has determined that this rule should be effective 15 days after the date of publication in the **Federal Register**.

Executive Order 12866 and Regulatory Flexibility Act

This rule has been reviewed under Executive Order 12866. The rule has been determined to be not significant for purposes of Executive Order 12866 and, therefore, has not been reviewed by the Office of Management and Budget.

In accordance with 5 U.S.C. 604, we have performed a Final Regulatory Flexibility Analysis regarding the impact of this rule on small entities.

This rule removes the requirement that horses imported from Mexico be quarantined for 7 days at vector-proof quarantine facilities. No issues were raised by public comments in response to the Initial Regulatory Flexibility Analysis we published in our proposal, and we identified no significant alternatives to this rule.

Compared with the 5-month period from October 1992 through February 1993 (before the 7-day quarantine requirement was established), there was a significant decline in the number of horses imported from Mexico during the period from October 1993 through February 1994 (following establishment of the 7-day quarantine requirement). During the 1992/1993 5-month period, there were 3,772 horses imported from Mexico, compared with only 125 during the 1993/1994 5-month period. It is reasonable to assume that the additional costs associated with the quarantine were at least partially responsible for the reduction in the number of horses imported during the 1993/1994 period.

There is a $50 hourly fee for inspection services conducted in Mexico by APHIS veterinary medical officers (in addition to an APHIS per horse charge of $28.50). Assuming that APHIS services are rendered for 2 hours during each day of quarantine, and assuming an average quarantine period of 3 days prior to establishment of the 7-day quarantine, the reduction in user fee costs from the lifting of the restrictions due to VEE will be about $400 per shipment ($700 minus $300). For an average shipment of 40 horses, the savings in fees will be about $10 per head.

Other quarantine costs, such as for feed and handling, can also be expected to decrease by more than one-half once the 7-day quarantine is no longer required. Whereas quarantine costs prior to establishment of the 7-day quarantine averaged about $3 per head per day, we estimate that during the period following establishment of the 7-day quarantine period, these charges increased to between $5 and $10 per day, due to additional precautionary measures. Again assuming a 3-day

quarantine period prior to establishment of the 7-day quarantine, the savings in charges by removing the 7-day quarantine requirement will be between $26 and $61 per head ($35 minus $9, and $70 minus $9).

With the combined savings of reduced user fees and other quarantine charges, the removal of the VEE quarantine requirements will reduce importers' costs by an estimated $36 to $71 per head. Based on the average 1993 price of approximately $310 per head for horses imported from Mexico, these reduced costs will represent a savings of between 11 and 23 percent of the value of each horse.

Executive Order 12778

This rule has been reviewed under Executive Order 12778, Civil Justice Reform. This rule: (1) Preempts all State and local laws and regulations that are inconsistent with this rule; (2) has no retroactive effect; and (3) does not require administrative proceedings before parties may file suit in court challenging this rule.

Paperwork Reduction Act

This document contains no information collection or recordkeeping requirements under the Paperwork Reduction Act of 1980 (44 U.S.C. 3501 *et seq.*).

List of Subjects in 9 CFR Part 92

Animal disease, Imports, Livestock, Poultry and poultry products, Quarantine, Reporting and recordkeeping requirements.

Accordingly, 9 CFR part 92 is amended as follows:

PART 92—IMPORTATION OF CERTAIN ANIMALS AND POULTRY AND CERTAIN ANIMAL AND POULTRY PRODUCTS; INSPECTION AND OTHER REQUIREMENTS FOR CERTAIN MEANS OF CONVEYANCE AND SHIPPING CONTAINERS THEREON

1. The authority citation for part 92 continues to read as follows:

Authority: 7 U.S.C. 1622; 19 U.S.C. 1306; 21 U.S.C. 102–105, 111, 114a, 134a, 134b, 134c, 134d, 134f, 135, 136, and 136a; 31 U.S.C. 9701; 7 CFR 2.17, 2.51, 371.2(d).

§ 92.308 [Amended]

2. In § 92.308, paragraph (a)(1) is amended by removing the reference ''§ 92.317'' and adding in its place the reference ''§§ 92.317 and 92.324''.

§ 92.324 [Amended]

3. In § 92.324, the first sentence is amended by removing the words '', for not less than 7 days and'' and by removing the words ''approved by the Administrator and constructed so as to prevent the entry of mosquitoes and other hematophagous insects''.

§ 92.326 [Amended]

4. In § 92.326, the first sentence is amended by removing the reference ''92.323, and 92.324'' and adding in its place the reference ''and 92.323''.

Done in Washington, DC, this 20th day of January 1995.

Terry L. Medley,

Acting Administrator, Animal and Plant Health Inspection Service.

[FR Doc. 95–1976 Filed 1–25–95; 8:45 am]

BILLING CODE 3410–34–P–M

FEDERAL RESERVE SYSTEM

12 CFR Part 230

[Regulation DD; Docket No. R–0836]

Truth in Savings

AGENCY: Board of Governors of the Federal Reserve System.

ACTION: Interim rule.

SUMMARY: The Board has adopted an interim rule amending Regulation DD (Truth in Savings) to permit institutions to disclose an annual percentage yield (APY) equal to the contract interest rate for time accounts with maturities greater than one year that do not compound but require interest distributions at least annually. This interim rule does not apply to or affect institutions that permit but do not require (or that bar) interest distributions before maturity. This amendment resolves questions about the APY disclosure for these accounts during consideration of public comments on a related proposal published elsewhere in today's **Federal Register**.

EFFECTIVE DATE: January 18, 1995.

FOR FURTHER INFORMATION CONTACT: Jane Ahrens, Senior Attorney, Kyung Cho-Miller, or Obrea Otey Poindexter, Staff Attorneys, Division of Consumer and Community Affairs, Board of Governors of the Federal Reserve System, at (202) 452–3667 or 452–2412; for questions associated with the regulatory flexibility analysis, Gregory Elliehausen, Economist, Office of the Secretary, at (202) 452–2504; for the hearing impaired *only*, Dorothea Thompson, Telecommunications Device for the Deaf, at (202) 452–3544.

SUPPLEMENTARY INFORMATION:

I. Background

The Truth in Savings Act (12 U.S.C. 4301 et seq.) requires depository institutions to provide disclosures to consumers about their deposit accounts, including an annual percentage yield (APY) on interest-bearing accounts calculated under a method prescribed by the Board. The APY is the primary uniform measurement for comparison shopping among deposit accounts. The law also contains rules about advertising, including the advertising of accounts at depository institutions offered to consumers by deposit brokers. The Board's Regulation DD (12 CFR part 230), which was adopted in September 1992 and became effective in June 1993, implements the act. (See 57 FR 43337, September 21, 1992, and 58 FR 15077, March 19, 1993.)

In adopting Regulation DD, the Board considered various approaches for calculating the APY, reflecting several competing interests and concerns. The current APY formula is simple and easy to use. It assumes that interest remains on deposit until maturity. This assumption produces an APY that has the effect of reflecting the time value of money for accounts that remain on deposit until maturity. It does not always reflect the time value of money when there are interest payments prior to maturity.

II. Proposals Affecting the APY

As deposit brokers began complying with the APY formula and Regulation DD's advertising rules, the Securities Industry Association (SIA) asked the Board to reconsider how the APY is calculated. The SIA objected to the fact that, for multi-year certificates of deposit (CDs) that are noncompounding but pay interest at least annually, the formula produces an APY that is less than the contract interest rate. Disclosure of an APY lower than the interest rate did not, according to the SIA, always allow for meaningful comparison shopping among deposit accounts. The SIA believed that the APY should at least equal the contract interest rate.

In December 1993, the Board published a proposal that would have factored into the APY calculation the specific time intervals for interest paid on the account—that is, the time value of money (58 FR 64190, December 6, 1993); an additional internal rate of return formula would have been added to the regulation. The proposal also offered an alternative limited change in the APY disclosure for multi-year noncompounding CDs; under this approach, institutions would disclose an APY equal to the contract interest rate if the CDs paid interest at least annually. The proposal was withdrawn in May 1994, based on considerations of

cost and burden at that time (59 FR 24376, May 11, 1994).

Simultaneously with the withdrawal of the December 1993 proposal, in May 1994 the Board published a related proposal that addressed depository institutions' compounding and crediting practices. Under the May proposal, institutions offering accounts that pay interest by check (or transfer) or by posting interest to the account would have to post interest at least as often as they pay out interest by check. That is, for accountholders leaving the interest in the account, interest would compound on at least as frequent a basis as the interest payments made to others. For example, if an institution offers a two-year CD, permits consumers to receive accrued interest in monthly interest checks, and also permits interest to remain in the account, the institution would have to credit and compound interest at least monthly. If an institution sends consumers the interest payments (and does not permit consumers to leave interest in the account), the institution would treat the interest payment frequency as compounding in the APY calculation. For example, for a two-year CD that requires consumers to receive an annual interest payment, the APY would reflect annual compounding.

In July, the Board extended the time to provide comments on the proposed amendments. At the same time, the Board reopened comment on a limited alternative that had been published in December 1993 and withdrawn in May 1994; that alternative equates the APY and the contract interest rate for noncompounding multi-year CDs that pay interest at least annually. (59 FR 35271, July 11, 1994)

The Board received about 550 comments on the proposal (including comments on the alternative approach involving noncompounding multi-year CDs). About 95% of the comments were from financial institutions. The remaining 5% were from trade associations, data processors and others. Approximately 450 comments addressed the proposed amendments affecting the APY formula; about 2% were in favor of the proposal, 98% were opposed, most of them because of the proposed matching of compounding and crediting frequencies. About 100 commenters addressed the alternative that would equate the APY to the interest rate; nearly 60% supported this approach.

On January 4, 1995, the Board adopted one part of the May 1994 proposal. The Board voted to amend the definition of the APY to reflect the frequency of interest payments; it declined to adopt another portion of the May proposal that would have affected institutions' crediting and compounding policies. The Board also declined to adopt the alternative proposal published in July 1994 that equated the APY and the interest rate for multi-year, noncompounding certificates of deposit that make interest payments at least annually. Subsequently, the Board received petitions for reconsideration from both the major banking industry trade associations and consumer advocates.

On January 17, the Board granted the petitions and decided to publish for public comment a modified version of the May 1994 proposal, which would factor the time value of interest payments into the APY calculation using the current formula, but would not require institutions to match crediting and compounding policies for accounts where consumers may receive interest payments or leave interest in the account. The Board is also soliciting comment on a second approach that would factor the time value of interest payments into the APY calculation using an additional internal rate of return formula. (See Docket R–0869 elsewhere in today's **Federal Register**.)

In order to address immediately one anomaly created by the current rule, the Board is adopting as an interim rule an APY disclosure for noncompounding multi-year CDs.

III. Equating the APY and Interest Rate for Multi-Year Noncompounding CDs

The interim rule represents a modified version of the July proposal: Institutions may disclose an APY equal to the contract interest rate for noncompounding multi-year CDs that require interest distributions at least annually. Institutions that prohibit withdrawal of interest or that permit (but do not require) interest distributions are not affected. The Board believes that this narrow rule provides a targeted response to questions about the APY disclosure for the class of accounts that currently must disclose an APY that is lower than the stated interest rate. The Board believes adopting the interim rule is necessary to limit any consumer confusion and to allow more effective comparison shopping by consumers.

The interim rule is based on concerns expressed by commenters in the earlier rulemakings and upon further analysis by the Board. For example, commenters voiced concern that under the July 1994 proposal, which covered noncompounding multi-year CDs that paid—or offered to pay—interest at least annually, the same APY could be disclosed for compounding and noncompounding CDs (such as a noncompounding two-year CD with annual interest checks and a two-year CD that also offers annual interest checks or annual compounding) and this might discourage compounding. The Board believes the interim rule responds to these concerns. The interim rule does not apply to a multi-year CD that provides optional periodic withdrawals of interest. That account must compound at least annually to quote an APY equal to the contract interest rate. Under the existing rules, for example, if a consumer invests $1,000 in a two-year CD and Institution A offers a noncompounding two-year CD at a 6% interest rate and *permits* interest withdrawals or requires interest payouts only at maturity, the APY is 5.83%. Under the interim rule, if Institution B offers a noncompounding two-year CD at the same interest rate and *requires* annual interest checks, the APY is 6.00%.

In addition to narrowing the scope of the amendment, the Board is requiring a brief narrative for account disclosures and advertisements if institutions choose to comply with the interim rule and state an APY equal to the contract interest rate. The Board believes this narrative will further minimize possible consumer confusion about the effect of interest payments on the APY and earnings from the account.

The interim rule being adopted by the Board will permit new APY disclosures to be made in certain circumstances pending final resolution of this matter. As the Board moves toward a permanent resolution of this issue, it will consider commenters' views on retaining the interim rule.

IV. Regulatory Revisions: Section-by-Section Analysis

Section 230.4—Account Disclosures

4(b) Content of account disclosures
4(b)(6) Features of time accounts
4(b)(6)(iii) Withdrawal of interest prior to maturity

The regulation requires a disclosure for institutions offering time accounts that compound interest and permit a consumer to withdraw accrued interest during the account term. The disclosure states that the APY assumes interest remains on deposit until maturity and that a withdrawal of interest will reduce earnings. Under the interim rule, the Board is adding a brief narrative for institutions that state an APY equal to the contract interest rate for noncompounding multi-year CDs that require interest payouts at least annually. The Board believes a

statement alerting customers to the fact that interest cannot remain in the account will assist consumers in comparison shopping between multi-year CDs with annual compounding and multi-year CDs that do not compound but require interest payouts during the account term, without adding an undue burden on institutions.

Section 230.8—Advertising

8(c) When additional disclosures are required

8(c)(6) Features of time accounts

The regulation requires institutions advertising APYs to disclose other key features about the account. Under the interim rule, the Board is adding a brief narrative that parallels the disclosure required by § 230.4(b)(6)(iii). If an institution states an APY equal to the contract interest rate in advertising a noncompounding multi-year CD that requires interest payments, the fact that interest payouts are mandatory and that interest cannot remain in the account must be stated. The Board believes that the disclosure will assist consumers in comparison shopping between multi-year CDs that compound annually and multi-year CDs that do not compound but require interest payouts at least annually, without adding undue burden on institutions.

Appendix A to Part 230—Annual Percentage Yield Calculation

Part I. Annual Percentage Yield for Account Disclosures and Advertising Purposes

E. Time Accounts With a Stated Maturity Greater Than One Year That Pay Interest at Least Annually

Under the interim rule, the amendments to Appendix A affect institutions offering noncompounding multi-year CDs that require interest payouts at least annually. A new paragraph E is added to clarify how APYs may be determined for such accounts. Two examples are added, including an example calculating the APY for a stepped-rate account covered by the amendments.

The statute provides that the APY shall be calculated under a method prescribed by the Board in regulations, and authorizes the Board to provide for adjustments and exceptions for any class of accounts that, in the Board's judgment, are necessary or proper to carry out the purposes of the act, prevent circumvention of the act's requirements, or facilitate compliance. Based on the comments received and further analysis, the Board finds that an interim rule permitting institutions to disclosure an APY equal to the contract interest rate for noncompounding multi-year CDs that require interest distributions at least annually is necessary to carry out the purposes of the act—enabling consumers to make informed decisions about deposit accounts. The exception is narrowly drawn, and reflects the value of receiving payments at least annually on accounts that do not permit accountholders to keep interest on deposit until maturity.

Appendix B to Part 230—Model Clauses and Sample Forms

B–1 Model Clauses for Account Disclosures

(h) Disclosures relating to time accounts

(h)(v) Required interest distribution

Under the interim rule, the Board is adding a model clause to describe the effect of interest payments on earnings.

V. Regulatory Flexibility Analysis and Paperwork Reduction Act

The Board's Office of the Secretary has prepared a regulatory analysis on the interim rule. A copy of the analysis may be obtained from Publications Services, Board of Governors of the Federal Reserve System, Washington, D.C. 20551, at (202) 452–3245.

In accordance with section 3507 of the Paperwork Reduction Act of 1980 (44 U.S.C. 35; 5 CFR 1320.13), the revisions were reviewed by the Board under the authority delegated to the Board by the Office of Management and Budget after consideration of comments received during the public comment period.

The interim rule revises the APY that may be disclosed for noncompounding CDs greater than one year that require interest payouts at least annually. It also adds a brief narrative for account disclosures and advertisements for accounts that disclose the contract interest rate as the APY. The Board believes the burden associated with the amendment affects a narrow class of accounts and is likely to be minimal. New calculations are permissive, and the Board believes only a small number of institutions will be affected. Based on its analysis of the impact of the amended regulation, the Board believes that there is no net change in the Board's current estimate of paperwork burden associated with Regulation DD. The annual information disclosure burden for state member banks is estimated to be 1.7 million hours.

List of Subjects in 12 CFR Part 230

Advertising, Banks, banking, Consumer protection, Federal Reserve System, Reporting and recordkeeping requirements, Truth in savings.

For the reasons set forth in the preamble, the Board amends 12 CFR part 230 as set forth below:

PART 230—TRUTH IN SAVINGS (REGULATION DD)

1. The authority citation for part 230 continues to read as follows:

Authority: 12 U.S.C. 4301, *et seq.*

2. Section 230.4 is amended by adding a new sentence at the end of paragraph (b)(6)(iii) to read as follows:

§ 230.4 Account disclosures.

* * * * *

(b) * * *

(6) * * *

(iii) * * * For accounts that do not compound interest on an annual or more frequent basis, with a stated maturity greater than one year that require interest payouts at least annually and that disclose an APY determined in accordance with section E of Appendix A of this part, a statement that interest cannot remain on deposit and that payout of interest is mandatory.

* * * * *

3. Section 230.8 is amended by adding a new paragraph (c)(6)(iii) to read as follows:

§ 230.8 Advertising.

* * * * *

(c) * * *

(6) * * *

(iii) *Required interest payouts.* For noncompounding time accounts with a stated maturity greater than one year that do not compound interest on an annual or more frequent basis, that require interest payouts at least annually, and that disclose an APY determined in accordance with section E of Appendix A of this part, a statement that interest cannot remain on deposit and that payout of interest is mandatory.

* * * * *

4. In Part 230, Appendix A is amended as follows:

a. The second sentence in the introductory text to Part I is revised;

b. The first sentence of the introductory text to Part I, A. General Rules is revised; and

c. A new section E is added to Part I.

The revisions and addition read as follows:

Appendix A to Part 230—Annual Percentage Yield Calculation

* * * * *

Part I. Annual Percentage Yield for Account Disclosures and Advertising Purposes

* * * Special rules apply to accounts with tiered and stepped interest rates, and to certain time accounts with a stated maturity greater than one year.

A. General Rules

Except as provided in Part I.E. of this appendix, the annual percentage yield shall be calculated by the formula shown below.* * *

* * * * *

E. Time Accounts with a Stated Maturity Greater than One Year that Pay Interest At Least Annually

1. For time accounts with a stated maturity greater than one year that do not compound interest on an annual or more frequent basis, and that require the consumer to withdraw interest at least annually, the annual percentage yield may be disclosed as equal to the interest rate.

Example

(1) If an institution offers a $1,000 two-year certificate of deposit that does not compound and that pays out interest semi-annually solely by check or transfer, at a 6.00% interest rate the annual percentage yield may be disclosed as 6.00%.

2. For time accounts covered by this paragraph that are also stepped-rate accounts, the annual percentage yield may be disclosed as equal to the composite interest rate.

Example

(1) If an institution offers a $1,000 three-year certificate of deposit that does not compound and that pays out interest annually solely by check or transfer, at a 5.00% interest rate for the first year, 6.00% interest rate for the second year, and 7.00% interest rate for the third year, the institution may compute the composite interest rate and APY as follows:

(a) Multiply each interest rate by the number of days it will be in effect;

(b) Add these figures together; and

(c) Divide by the total number of days in the term.

(2) Applied to the example, the products of the interest rates and days the rates are in effect are (5.00%×365 days) 1825, (6.00%×365 days) 2190, and (7.00%×365 days) 2555 days, respectively. The sum of these products, 6570 days, is divided by 1095, the total number of days in the term. The composite interest rate and APY are both 6.00%.

* * * * *

5. In Part 230, Appendix B, under B–1 Model Clauses For Account Disclosures, a new paragraph (h)(v) is added to read as follows:

Appendix B to Part 230—Model Clauses and Sample Forms

* * * * *

B–1—Model Clauses for Account Disclosures

* * * * *

(h) * * *

(v) Required interest distribution.

This account requires the distribution of interest and does not allow interest to remain in the account.

* * * * *

By order of the Board of Governors of the Federal Reserve System, January 18, 1995.

William W. Wiles,

Secretary of the Board.

[FR Doc. 95–1785 Filed 1–25–95; 8:45am]

BILLING CODE 6210–01–P

DEPARTMENT OF HEALTH AND HUMAN SERVICES

Food and Drug Administration

21 CFR Parts 74 and 201

[Docket No. 92C–0293]

Listing of Color Additives Subject to Certification; FD&C Yellow No. 5; Confirmation of Effective Date

AGENCY: Food and Drug Administration, HHS.

ACTION: Final rule; confirmation of effective date.

SUMMARY: The Food and Drug Administration (FDA) is confirming the effective date of December 30, 1994, of the final rule that appeared in the **Federal Register** of November 29, 1994 (59 FR 60893) (effective date corrected in the **Federal Register** of December 2, 1994 (59 FR 61929)), and amended the color additive regulations to provide for the safe use of FD&C Yellow No. 5 and FD&C Yellow No. 5 Aluminum Lake for coloring drugs and cosmetics intended for use in the area of the eye.

DATES: Effective date confirmed: December 30, 1994.

FOR FURTHER INFORMATION CONTACT: Robert L. Martin, Center for Food Safety and Applied Nutrition (HFS–217), Food and Drug Administration, 200 C St. SW., Washington, DC 20204–0001, 202–418–3074.

SUPPLEMENTARY INFORMATION: In the **Federal Register** of November 29, 1994 (59 FR 60893) (effective date corrected in the **Federal Register** of December 2, 1994 (59 FR 61929)), FDA amended 21 CFR 74.1705 and 74.2705 to provide for the safe use of FD&C Yellow No. 5 and FD&C Yellow No. 5 Aluminum Lake for coloring drugs and cosmetics intended for use in the area of the eye.

FDA gave interested persons until December 29, 1994, to file objections or requests for a hearing. The agency received no objections or requests for a hearing on the final rule. Therefore, FDA finds that the final rule published in the **Federal Register** of November 29, 1994, should be confirmed as corrected on December 2, 1994.

List of Subjects

21 CFR Part 74

Color additives, Cosmetics, Drugs.

21 CFR Part 201

Drugs, Labeling, Reporting and recordkeeping requirements.

Therefore, under the Federal Food, Drug, and Cosmetic Act (secs. 201, 401, 402, 403, 409, 501, 502, 505, 601, 602, 701, 721 (21 U.S.C. 321, 341, 342, 343, 348, 351, 352, 355, 361, 362, 371, 379e)) and under authority delegated to the Commissioner of Food and Drugs (21 CFR 5.10), notice is given that no objections or requests for a hearing were filed in response to the November 29, 1994, final rule. Accordingly, the amendments promulgated thereby became effective December 30, 1994.

Dated: January 19, 1995.

William K. Hubbard,

Interim Deputy Commissioner for Policy.

[FR Doc. 95–2005 Filed 1–25–95; 8:45 am]

BILLING CODE 4160–01–F

DEPARTMENT OF LABOR

Occupational Safety and Health Administration

29 CFR Part 1926

[Docket No. S–206]

Safety Standards for Fall Protection in the Construction Industry

AGENCY: Occupational Safety and Health Administration (OSHA), Department of Labor.

ACTION: Final rule; delay of effective date.

SUMMARY: The Occupational Safety and Health Administration (OSHA) issued a final rule on Fall Protection in the Construction Industry (59 FR 40672, August 9, 1994), which is scheduled to become effective on February 6, 1995. The Agency has determined that interested persons did not receive adequate notice that subpart M would apply to non-building steel erection activities. Accordingly, OSHA is delaying the application of the final rule to steel erection activities, as well as the effectiveness of certain items in the final rule, until August 6, 1995. OSHA intends to reopen the subpart M rulemaking record in a subsequent **Federal Register** notice for comment regarding the appropriate fall protection measures to be taken to protect employees engaged in non-building steel erection activities from fall hazards.

EFFECTIVE DATE: As of February 6, 1995, the effective date for items 4, 5, 6, and 7, in the **Federal Register** document of August 9, 1994, (59 FR 40729) is delayed until August 6, 1995. In addition, OSHA is not applying subpart M to the non-building steel erection industry until August 6, 1995.

FOR FURTHER INFORMATION CONTACT: Anne C. Cyr, Office of Information and Consumer Affairs, Occupational Safety and Health Administration, U.S. Department of Labor, Room N–3647, 200 Constitution Avenue, NW., Washington, DC 20210. Telephone (202) 219–8148.

SUPPLEMENTARY INFORMATION:

I. Why OSHA Is Delaying the Effective Date of Subpart M to the Extent the Standard Applies to Steel Erection Activities

On November 25, 1986, OSHA proposed to revise fall protection requirements for the construction industry and to consolidate those requirements in subpart M of Part 1926. (51 FR 43718, November 26, 1986). At that time, the agency stated that it intended to apply subpart M to all steel erection activities, but noted that ''[a]dditional requirements to have fall protection for connectors and for workers on derrick and erection floors during steel erection would remain in subpart R—Steel Erection.'' 51 FR 43720.

Steel erection involves a wide variety of structures, roughly grouped into building and non-building structures. The term ''building'' includes single-story and multi-story buildings, such as mill buildings, warehouses, gymnasiums, stadiums, power plants, and theaters as well as metal floor decking and metal roof decking installed during the erection process. The term ''non-building structures'' refers to the erection of steel members during the construction of bridges (including viaducts and overpasses), towers, tanks, antennae and similar structures.

After reviewing comments on the proposed revisions to subpart M, OSHA decided that fall hazards for workers engaged in the erection of steel framed buildings would be better addressed in a rulemaking to revise Subpart R, ''Steel Erection.'' Subpart R applies to steel frame buildings and contains a variety of safety requirements, of which fall protection is only one part.

OSHA announced this decision in the **Federal Register** on January 26, 1988:

> The comments received to date have convinced the Agency to develop a separate proposed rule which will provide comprehensive coverage for fall protection in steel erection. OSHA intends, therefore, that the consolidation and revision of fall protection provisions in Subpart M not apply to steel erection and that the current fall protection requirements of Part 1926 continue to cover steel erection until the steel erection rulemaking is completed.

53 FR 2053.

OSHA also requested information on issues it believed would assist the agency in developing a proposal to revise subpart R. In discussing the request for information, OSHA stated that the revised subpart R would apply to ''the steel erection industry'' and would provide fall protection for ''steel erection workers.'' 54 FR 2053.

On March 22–23, 1988, OSHA held a hearing for the purpose of taking testimony relevant to: (a) the subpart M proposal (as revised in scope to exclude steel frame buildings), and (b) the January 1988 request for information concerning ''fall protection in steel erection.''

When OSHA stated in the January 26, 1988, **Federal Register** notice and at the March 1988 hearing that ''steel erection'' fall hazards would be addressed in a rulemaking to revise subpart R rather than in the subpart M rulemaking, it meant ''steel erection fall hazards covered by the existing subpart R.'' Since existing subpart R related only to buildings, these statements, OSHA believed, conveyed its intention that steel erection of buildings was being eliminated from subpart M rulemaking but not non-building steel erection.

The final Subpart M standard was issued August 9, 1994. It imposes the duty to provide fall protection for all construction activities and workplaces except designated activities for which other subparts of part 1926 specify fall protection requirements. See § 1926.501(a)(2). With respect to steel erection, § 1926.500(a)(2)(iii) provides:

> (2) Section 1926.501 sets forth those workplaces, conditions, operations, and circumstances for which fall protection shall be provided except as follows: * * *
>
> (iii) Requirements relating to fall protection for employees performing steel erection work in buildings are provided in subpart R of this part.

59 FR 40730.

Steel erection of non-building structures is not exempt from coverage because no other subpart of part 1926 specifies fall protection requirements for those activities and because the existing rulemaking record contains substantial evidence of the feasibility and efficacy of subpart M requirements in non-building steel erection work.

On October 7, 1994, five steel erection companies petitioned OSHA for an administrative stay of final subpart M to the extent the standard applies to steel erection activities, regardless of the type of steel erection being performed. They asserted that they had understood OSHA's January 26, 1988, and March 22–23, 1988, statements to mean that subpart M would not apply to any steel erection activities. They argued that OSHA had not given fair notice that subpart M would apply to the steel erection industry at all and, in consequence, petitioners were deprived of an opportunity to comment on this issue.

OSHA has reviewed the rulemaking record in light of petitioner's fair notice claims. In retrospect, OSHA agrees that the January 26, 1988, **Federal Register** notice and March 22–23, 1988, hearing statements did not clearly communicate OSHA's intention that non-building steel erection would continue to be included in the subpart M revision.

Because OSHA has determined that petitioners and other interested persons did not receive adequate notice that subpart M would apply to non-building steel erection activities, OSHA is not applying the standard steel erection until August 6, 1995. The delay of application will begin on February 6, 1995 and continue for 6 months, through August 6, 1995. OSHA is also delaying for 6 months the effective date of supporting amendments to subpart E (items 4, 5, 6 and 7) of the August 9, 1994, **Federal Register** notice). The purpose of the delay is to maintain the fall protection requirements for steel erection that were in effect before issuance of revised subpart M and to permit OSHA to reopen the subpart M record for supplemental comments concerning subpart M coverage of non-building steel erection work.

Subpart M and supporting amendments to subparts R, H, N, P, Q, and V will become effective for all construction activity other than steel erection on February 6, 1995.

II. Authority

This document was prepared under the direction of Joseph A. Dear, Assistant Secretary of Labor for Occupational Safety and Health, U.S. Department of Labor, 200 Constitution Avenue, NW., Washington, DC 20210.

It is issued under section 6(b) of the Occupational Safety and Health Act (29 U.S.C. 655), section 107 of the Construction Safety Act (40 U.S.C. 333), and 29 CFR part 1911.

Signed at Washington, DC, this 20th day of January 1995.

Jospeh A. Dear,

Assistant Secretary of Labor.

[FR Doc. 95–1973 Filed 1–25–95; 8:45 am]

BILLING CODE 4510–26–P

DEPARTMENT OF DEFENSE

Department of the Army

Corps of Engineers

33 CFR Part 241

Flood Control Cost-Sharing Requirements Under the Ability To Pay Provision

AGENCY: U.S. Army Corps of Engineers, DOD.

ACTION: Final amended rule.

SUMMARY: This document presents the final rule partially implementing section 103(m) of Public Law 99–662, 33 U.S.C. 2213, which directs the Secretary of the Army to reduce the non-Federal cost-share of flood control and agricultural water supply projects under an ''ability to pay'' determination. This amended rule applies only to flood control projects. Guidelines for agricultural water supply projects have not been promulgated.

EFFECTIVE DATE: January 26, 1995.

ADDRESSES: Headquarters, U.S. Army Corps of Engineers, Washington, DC 20314–1000.

FOR FURTHER INFORMATION CONTACT: Donald L. Barnes (202) 272–0120.

SUPPLEMENTARY INFORMATION: A final rule for flood control projects implementing Section 103(m) of Public Law 99–662, 33 U.S.C., was published in the **Federal Register** (54 FR 40578), October 2, 1989. A proposed amended rule was published in the **Federal Register** (59 FR 32670), June 24, 1994, allowing 60 days for review and comment. The proposed amended rule was in accord with the discretionary language contained in Section 201 of Public 102–580. The single response to the request for comments indicated support for an amended rule.

The final amended rule modifies the ability to pay determination for flood control projects to establish an eligibility for reductions in the non-Federal cost share using high cost criteria. Under this amended rule, when the normal non-Federal share is high (i.e., exceeding 35 percent) and when the normal per capita non-Federal cost of Construction exceeds $300, adjustments can be made to the standard non-Federal share based on these high cost considerations. Specifically, when both criteria are exceeded, the non-Federal share under the ability to pay provision will be either the requirement for lands, easements, rights-of-way, relocations, and disposal areas (LERRD's, i.e., no cash requirement) or 35 percent of the total project cost, whichever is greater. If LERRD's exceed 50 percent, the non-Federal share remains at 50 percent. This additional procedure does not change the benefits and income tests of the existing rule. Projects which would qualify for a reduction under the existing final rule, will receive a reduction from the high cost criteria, only if it provides a greater reduction than available under the benefits and income tests.

Periodic updating of the non-Federal per capita cost of construction will be accomplished and distributed to HQUSACE and to the field as soon as new data are available.

Background

In accordance with direction prescribed by Section 201 of the Water Resources Development Act of 1992, the Department of the Army conducted a study of the current ability to pay regulations for flood control projects. This study found, that while non-Federal cost shares for most structural flood control projects were less than 35 percent, in some cases (16 percent of the projects in a sample group studied), the non-Federal shares exceeded 35 percent, due to the high cost for LERRD. In addition, while for a majority of projects the non-Federal per capita cost of construction (total non-Federal share of construction costs divided by the population included within the geographic jurisdiction of the non-Federal project sponsor) was less than $300, a significant number (34 percent of the sample studies) had per capita non-Federal costs that exceeded that amount. Given these circumstances, we concluded that there should be an adjustment in the normal non-Federal cost share based upon the high cost criteria.

The single response to the proposed amended rule was fully supportive of the recommended procedure for projects with high non-Federal cost shares.

Executive Order 12866 and Regulatory Flexibility Act

This rule is not a major rule within the meaning of Executive Order 12866, because it is not likely to result in: (1) An annual effect on the economy of $100 million or more; (2) a major increase in costs or prices for consumers, individual industries, Federal, State, or local government agencies, or geographic regions: or (3) significant adverse effects on competition, employment, investment, productivity, innovation, or on the ability of United States based enterprises to compete with foreign based enterprises in domestic or export markets.

Pursuant to 5 U.S.C. Section 605(b), I hereby certify that this rule will not have a significant economic impact on a substantial number of small entities. Furthermore, the number of entities affected by this rule is small, and it imposes few, if any, administrative burdens of any sort on small entities.

List of Subjects in 33 CFR Part 241

Community facilities, Flood control, Intergovernmental relations, Water resources.

For purposes set out in the preamble, 33 CFR Part 241 is amended as follows:

PART 241—FLOOD CONTROL AND COST SHARING REQUIREMENTS UNDER THE ABILITY TO PAY PROVISION

1. The authority for part 241 is revised to read as follows:

Authority: Sec. 103(m), Pub. L. 99–662, 100 Stat. 4082 (33 U.S.C. 2201 et seq.), as amended by Sec. 201, Pub. L. 102–580, 106 Stat. 4797 (33 U.S.C. 2201 et seq.)

2. Sections 241.1 through 241.3 are revised to read as follows:

§ 241.1 Purpose.

This rule gives general instructions on the implementation of section 103(m) of the Water Resources Development Act of 1986, Public Law 99–662, as amended by section 201 of the Water Resources Development Act of 1992, Public Law 102–588, for application to flood control projects.

§ 241.2 Applicability.

This rule applies to all U.S. Army Corps of Engineers Headquarters (HQUSACE), elements and Major Subordinate Commands and District Commands of the Corps of Engineers having Civil Works Responsibilities.

§ 241.3 References.

References cited in paragraphs (f) thru (i) may be obtained from USACE Pub. Depot, CEIM–SP–D, 2803, 52d Avenue, Hyattsville, MD 20781–1102. References cited in paragraphs (d) and (e) may be obtained from the National Information Services, 5285 Port Royal Road, Springfield, VA 22161. References (a), (b) and (c) may be reviewed in your local library or by writing your local Congressperson.

(a) Water Resources Development Act, 1986, Public Law 99–662, 100 Stat. 4082, 33 U.S.C. 2201 et seq.

(b) Water Resources Development Act 1992, Public Law 102–580, 106 Stat. 4797, 33 U.S.C. 2201 et seq.

(c) U.S. Water Resources Council, Economic and Environmental Principles and Guidelines for Water and Related Land Resources Implementation Studies, March 10, 1983.

(d) Office of Personnel Management, FPM Bulletin 591–30.

(e) Office of Personnel Management, FPM 591–32.

(f) U.S. Army Corps of Engineers, Engineer Regulation 1165–2–29.

(g) U.S. Army Corps of Engineers, Engineer Regulation 1165–2–121.

(h) U.S. Army Corps of Engineers, Engineer Regulation 1165–2–131.

(i) U.S. Army Corps of Engineers, Engineer Regulation 405–1–12.

3. Section 241.5 is amended by adding paragraph (d):

§ 241.5 Procedures for estimating the Alternative Cost Share.

* * * * *

(d) Additional consideration for high cost projects. For any project where the normal non-Federal share exceeds 35 percent, and the per capita non-Federal cost (i.e., normal non-Federal share of total construction costs divided by the population in the sponsor's geographic jurisdiction) exceeds $300, the non-Federal share under the ability to pay provision will be either LERRD's (i.e., no cash requirement) or 35 percent, whichever is greater. If LERRD's exceed 50 percent, the non-Federal share remains at 50 percent. Projects which qualify under the benefits and income tests will receive the reduction under the high cost criteria only if the high cost criteria results in a greater reduction in the non-Federal cost share.

§ 241.6 [Amended]

4. In § 241.6(a), the abbreviation ''LCA'' is revised to read ''PCA''.

5. In § 241.7, the terms ''Local Cooperation Agreement'' and ''LCA'' are revised to read ''Project Cooperation Agreement and ''PCA'' respectively. In addition, this section is amended by revising paragraph (c)(2), and the first sentence of paragraph (e)(2) as follows:

§ 241.7 Application of test.

* * * * *

(c) * * *

(2) An exhibit attached to the Project Cooperation Agreement (PCA) will include the Benefits Based Floor (BBF) determined in § 241.5(a): the Eligibility Factor (EF) determined in § 241.5(b): If the Eligibility Factor is greater than zero but less than one, the estimated standard non-Federal share; the formula used in determining the ability to pay share as described in § 241.5(c)(1) through (c)(4); and a display of the non-Federal cost share under the high cost criteria described in § 241.5(d).

* * * * *

(e) * * *

(2) The non-Federal sponsor will be required to provide a cash payment equal to the minimum of five percent of estimated project costs, regardless of the outcome of the ability to pay test, unless any or all of the five percent cash requirement is waived by application of the high cost criteria described in § 241.5(d). * * *

* * * * *

Kenneth L. Denton,

Army Federal Register Liaison Officer.

[FR Doc. 95–1733 Filed 1–25–95; 8:45 am]

BILLING CODE 3710–92–M

ENVIRONMENTAL PROTECTION AGENCY

40 CFR Part 52

[DC 11–1–6741; FRL–5137–2]

Approval and Promulgation of Air Quality Implementation Plans; District of Columbia; Oxygenated Gasoline Program

AGENCY: Environmental Protection Agency (EPA).

ACTION: Final rule.

SUMMARY: EPA is approving a State Implementation Plan (SIP) revision submitted by the District of Columbia. This revision establishes and requires the implementation of an oxygenated gasoline program in the District of Columbia. The intended effect of this action is to approve, in a limited fashion, those subsections of the District of Columbia Municipal Regulations (DCMR) which pertain to oxygenated gasoline. It is also the effect of this action to disapprove, in a limited fashion, those subsections of the DCMR which pertain to oxygenated gasoline. This action is being taken under section 110 of the Clean Air Act (CAA).

EFFECTIVE DATE: This final rule will become effective on February 27, 1995.

ADDRESSES: Copies of the documents relevant to this action are available for public inspection during normal business hours at the Air, Radiation, and Toxics Division, U.S. Environmental Protection Agency, Region III, 841 Chestnut Building, Philadelphia, Pennsylvania 19107; the Air and Radiation Docket and Information Center, U.S. Environmental Protection Agency, 401 M Street, SW., Washington, DC 20460; and District of Columbia Department of Consumer and Regulatory Affairs, 2100 Martin Luther King Ave, SE., Washington, DC 20020.

FOR FURTHER INFORMATION CONTACT: Mrs. Kelly L. Bunker, (215) 597–4554.

SUPPLEMENTARY INFORMATION: On July 5, 1994 (59 FR 34401), EPA published a notice of proposed rulemaking (NPR) for the District of Columbia. The NPR proposed limited approval/limited disapproval of the District of Columbia's oxygenated gasoline regulation. The formal SIP revision was submitted by the District of Columbia's Department of Consumer and Regulatory Affairs on October 27, 1993.

The District of Columbia had submitted an oxygenated gasoline SIP on January 7, 1993. However, on July 6, 1993 EPA deemed the SIP incomplete due to the fact that the regulations were emergency and had an expiration of April 6, 1993 and because the SIP was submitted to EPA by an unauthorized authority. This incompleteness determination started the 18 month sanctions clock and the 24 month Federal implementation plan (FIP) clock. The October 27, 1993 oxygenated gasoline SIP submittal, which is the subject of this rulemaking action, stopped the 18 month sanctions clock but did not stop the 24 month FIP clock.

Other specific requirements of the District of Columbia's oxygenated gasoline regulation and the rationale for EPA's proposed action are explained in the NPR and will not be restated here. No public comments were received on the NPR.

Final Action

EPA is approving those subsections of 20 DCMR which pertain to oxygenated gasoline as a revision to the District of Columbia SIP. Those subsections of 20 DCMR include chapter 1, section 199 definitions for the terms blending plant, distributor, non-oxygenated gasoline, oxygenate, oxygenated gasoline, oxygenated gasoline control period, oxygenated gasoline control area, refiner, refinery, retailer, retail outlet, terminal, wholesale purchaser-consumer; chapter 5, section 500, subsections 500.4 and 500.5; shapter 5, section 502, subsection 502.18; chapter 9, section 904, subsections 904.1 and 904.2. EPA is also disapproving those subsections of 20 DCMR which pertain to oxygenated gasoline for the limited purpose of allowing the District of Columbia the opportunity to correct the deficiencies previously identified by EPA in the NPR. The deficiencies

identified in the NPR are the lack of: (1) A definition for the term ''carriers''; (2) a sampling procedure; and (3) procedures for the calculation of oxygen content in the gasoline sampled; the absence of which compromise the enforceability of the regulation and are deficiencies under section 110(a)(2) of the Clean Air Act. This final limited disapproval begins a new 18 month sanctions clock. The 24 month FIP clock continues to run.

Because of the previously identified deficiencies, EPA cannot grant full approval of this rule under section 110(k)(3) and part D. Also, because the submitted rule is not composed of separable parts which meet all the applicable requirements of the CAA, EPA cannot grant partial approval of the rule under section 110(k)(3). However, EPA may grant a limited approval of the submitted rule under section 110(k)(3) in light of EPA's authority pursuant to section 301(a) to adopt regulations necessary to further air quality by strengthening the SIP. The approval is limited because EPA's action also contains a simultaneous limited disapproval, due to the fact that the rule does not meet the section 110(a)(2) requirement because of the noted enforcement deficiencies. Thus, EPA is approving the oxygenated gasoline regulations found in 20 DCMR chapter 1, section 199 definitions for the terms blending plant, distributor, non-oxygenated gasoline, oxygenate, oxygenated gasoline, oxygenated gasoline control period, oxygenated gasoline control area, refiner, refinery, retailer, retail outlet, terminal, wholesale purchaser-consumer; chapter 5, section 500, subsections 500.4 and 500.5; chapter 5, section 502, subsection 502.18; chapter 9, section 904, subsections 904.1 and 904.2, which were submitted by the District of Columbia under sections 110(k)(3) and 301(a) of the CAA, for the limited purpose of strengthening the District of Columbia SIP.

SIP approvals under section 110 and subchapter I, part D of the Clean Air Act do not create any new requirements but simply approve requirements that the State is already imposing. Therefore, because the Federal SIP approval does not impose any new requirements, the Administrator certifies that it does not have a significant impact on any small entities affected. Moreover, due to the nature of the Federal-State relationship under the CAA, preparation of a flexibility analysis would constitute Federal inquiry into the economic reasonableness of state action. The Clean Air Act forbids EPA to base its actions concerning SIPs on such grounds. *Union Electric Co.* v. *U.S. EPA*, 427 U.S. 246, 255–66 (1976); 42 U.S.C. 7410(a)(2).

At the same time, EPA is also disapproving the District of Columbia oxygenated gasoline rule because it contains deficiencies that have not been corrected as required by section 110(a)(2) of the CAA, and, as such, the rule does not fully meet the requirements of part D of the CAA. Under section 179(a)(2), if the Administrator disapproves a submission under section 110(k) for an area designated nonattainment, based on the submission's failure to meet one or more of the elements required by the Act, the Administrator must apply one of the sanctions set forth in section 179(b) unless the deficiency has been corrected within 18 months of such disapproval. Section 179(b) provides two sanctions available to the Administrator: highway funding and offsets. The 18 month period referred to in section 179(a) will begin at the time EPA publishes final notice of this disapproval. The 18 month sanctions clock for the District of Columbia oxygenated gasoline regulation begins on January 26, 1995. Moreover, the 24 month clock for the FIP requirement under section 110(c) continues to run.

EPA's disapproval of the State request under section 110 and subchapter I, part D of the CAA does not affect any existing requirements applicable to small entities. Any pre-existing Federal requirements remain in place after this disapproval. Federal disapproval of the state submittal does not affect its state-enforceability. Moreover, EPA's disapproval of the submittal does not impose any new Federal requirements. Therefore, EPA certifies that this disapproval action does not have a significant impact on a substantial number of small entities because it does not remove existing requirements and impose any new Federal requirements.

Nothing in this action should be construed as permitting or allowing or establishing a precedent for any future request for revision to any state implementation plan. Each request for revision to the state implementation plan shall be considered separately in light of specific technical, economic, and environmental factors and in relation to relevant statutory and regulatory requirements.

This action makes final the action proposed at 59 FR 34401. As noted elsewhere in this document, EPA received no public comment on the proposed action. As a direct result, the Regional Administrator has reclassified this action from a Table 2 to a Table 3 under the processing procedures established at 54 FR 2214, January 19, 1989, as revised by an October 4, 1993 memorandum from Michael H. Shapiro, Acting Assistant Administrator for Air and Radiation. A future document will inform the general public of these tables.

The OMB has exempted this regulatory action from E.O. 12866 review.

Under section 307(b)(1) of the Clean Air Act, petitions for judicial review of this action, pertaining to the District of Columbia's oxygenated gasoline regulation, must be filed in the United States Court of Appeals for the appropriate circuit by March 27, 1995. Filing a petition for reconsideration by the Administrator of this final rule does not affect the finality of this rule for the purposes of judicial review nor does it extend the time within which a petition for judicial review may be filed, and shall not postpone the effectiveness of such rule or action. This action may not be challenged later in proceedings to enforce its requirements. (See section 307(b)(2).)

List of Subjects in 40 CFR Part 52

Environmental protection, Air pollution control, Carbon monoxide, Incorporation by reference, Intergovernmental relations, Reporting and recordkeeping requirements.

Dated: December 29, 1994.

Peter H. Kostmayer,

Regional Administrator, Region III.

Chapter I, title 40, of the Code of Federal Regulations is amended as follows:

PART 52—[AMENDED]

1. The authority citation for part 52 continues to read as follows:

Authority: 42 U.S.C. 7401–7671q.

Subpart J—District of Columbia

2. Section 52.470 is amended by adding paragraphs (c)(28) to read as follows:

§ 52.470 Identification of plan.

* * * * *

(c) * * *

(28) Revisions to 20 District of Columbia Municipal Regulations (DCMR) pertaining to oxygenated gasoline submitted on October 22, 1993 by the District of Columbia's Department of Consumer and Regulatory Affairs.

(i) Incorporation by reference.

(A) Letter of October 22, 1993 from the District of Columbia's Department of Consumer and Regulatory Affairs transmitting the oxygenated gasoline regulations.

(B) District of Columbia Register dated July 30, 1993 containing 20 DCMR chapter 1, Section 199 definitions for the terms blending plant, distributor, non-oxygenated gasoline, oxygenate, oxygenated gasoline, oxygenated gasoline control period, oxygenated gasoline control area, refiner, refinery, retailer, retail outlet, terminal, wholesale purchaser-consumer; Chapter 5, Section 500, subsections 500.4 and 500.5; chapter 5, section 502, subsection 502.18; Chapter 9, section 904, subsections 904.1 and 904.2, effective September 30, 1993.

(ii) Additional material.

(A) Remainder of October 22, 1993 District of Columbia submittal.

3. Section 52.472 is amended by adding paragraph (e) to read as follows:

§ 52.472 Approval status.

* * * * *

(e) Limited approval/limited disapproval of revisions to 20 District of Columbia Municipal Regulations Chapter 1, Section 199 definitions for the terms blending plant, distributor, non-oxygenated gasoline, oxygenate, oxygenated gasoline, oxygenated gasoline control period, oxygenated gasoline control area, refiner, refinery, retailer, retail outlet, terminal, wholesale purchaser-consumer; Chapter 5, Section 500, Subsections 500.4 and 500.5; Chapter 5, Section 502, Subsection 502.18; Chapter 9, Section 904, Subsections 904.1 and 904.2 submitted on October 22, 1993 by the District of Columbia's Department of Consumer and Regulatory Affairs. The District of Columbia oxygenated gasoline regulation is deficient in that it lacks the following: A definition for the term ''carriers''; a sampling procedure; and procedures for the calculation of oxygen content in the gasoline sampled; the absence of which compromise the enforceability of the regulation and are deficiencies under section 110(a)(2) of the Clean Air Act.

[FR Doc. 95–1933 Filed 1–25–95; 8:45 am]

BILLING CODE 6560–50–F

40 CFR Part 52

[NC–064–2–6642a; FRL–5138–6]

Approval and Promulgation of Implementation Plans North Carolina: Approval of Revisions to the Implementation Plan

AGENCY: Environmental Protection Agency (EPA).

ACTION: Direct final rule.

SUMMARY: On January 7, 1994, the State of North Carolina, through the North Carolina Department of Environment, Health and Natural Resources, submitted revisions to the North Carolina State Implementation Plan (SIP). These revisions extend the Reasonably Available Control Technology (RACT) regulations for emissions of Volatile Organic Compounds (VOC) to new and expanded nonattainment areas for ozone (O_3); amend several definitions; add compliance schedules for sources located in O_3 nonattainment areas; amend the alternative compliance and exemption from compliance schedule regulations; amend the graphic arts regulation; add new regulations for several types of VOC sources; and add an interim regulation for categories of sources for which RACT guidelines are being developed.

DATES: This final rule is effective March 27, 1995 unless notice is received by February 27, 1995 that someone wishes to submit adverse or critical comments. If the effective date is delayed, timely notice will be published in the **Federal Register**.

ADDRESSES: Written comments should be addressed to: Randy Terry, Regulatory Planning and Development Section, Air Programs Branch, Air, Pesticides & Toxics Management Division, Region IV Environmental Protection Agency, 345 Courtland Street, NE., Atlanta, Georgia 30365.

Copies of the material submitted by the NCDEHNR may be examined during normal business hours at the following locations:

Air and Radiation Docket and Information Center (Air Docket 6102), U.S. Environmental Protection Agency, 401 M Street, SW., Washington, DC 20460.

Environmental Protection Agency, Region IV Air Programs Branch, 345 Courtland Street, NE., Atlanta, Georgia 30365.

North Carolina Department of Environment, Health and Natural Resources, 512 North Salisbury Street, Raleigh, North Carolina 27604.

FOR FURTHER INFORMATION CONTACT: Randy Terry, Regulatory Planning and Development Section, Air Programs Branch, Air, Pesticides & Toxics Management Division, Region IV Environmental Protection Agency, 345 Courtland Street, NE., Atlanta, Georgia 30365. Thetelephone number is 404/347–3555 ext. 4212.

SUPPLEMENTARY INFORMATION: On January 7, 1994, the State of North Carolina, through the North Carolina Department of Environment, Health and Natural Resources, submitted revisions to the North Carolina SIP. These revisions extend the RACT for emissions of VOCs.

Pre-enactment Nonattainment Areas With Extended Boundaries

Under the pre-amended Clean Air Act, ozone nonattainment areas were required to adopt RACT rules for sources of VOC emissions. EPA issued three sets of control technique guidelines (CTGs) documents, establishing a ''presumptive norm'' for RACT for various categories of VOC sources. The three sets of CTGs were: (1) Group I—those issued before January 1978 (15 CTGs); (2) Group II—those issued in 1978 (9 CTGs); and (3) Group III—those issued in the early 1980's (5 CTGs). Those sources not covered by a CTG were called non-CTG sources. EPA determined that the area's attainment date determined which RACT rules the area needed to adopt and implement. Under section 172, ozone nonattainment areas were generally required to attain the ozone standard by December 31, 1982. Those areas that submitted an attainment demonstration projecting attainment by that date were required to adopt RACT for sources covered by the Group I and II CTGs. Those areas that sought an extension of the attainment date to as late as December 31, 1987, under section 172 were required to adopt RACT for all CTG sources and for all major non-CTG sources.

Under the pre-amended Act, EPA designated the Charlotte area (Mecklenburg County) as nonattainment. The State established a pre-enactment attainment date of December 31, 1982, for the Charlotte nonattainment area and, therefore, RACT was required for the Group I and II CTG's.

However, the Charlotte area did not attain the ozone standard by the approved attainment date. On May 26, 1988, EPA notified the Governor of North Carolina that portions of the SIP were inadequate to attain and maintain the ozone standard and requested that deficiencies in the existing SIP be corrected (EPA's SIP-Call). On November 15, 1990, amendments to the 1977 CAA were enacted. Public Law 101–549, 104 Stat. 2399, codified at 42 U.S.C. 7401–7671q. In amended section 182(a)(2)(A) of the CAA, Congress statutorily adopted the requirement that pre-enactment ozone nonattainment areas that retained their designation of nonattainment and were classified as marginal or above fix their deficient RACT rules for ozone by May 15, 1991. The Charlotte area retained its designation of nonattainment and was classified as moderate. (See 56 FR 56694 (Nov. 6, 1991)). The State submitted

revisions to meet the RACT fix-up requirement and EPA has approved these revisions. These revisions became effective on August 22, 1994.

Section 182(b)(2) of the amended Act requires states to adopt RACT rules for all areas designated nonattainment for ozone and classified as moderate or above. There are three parts to the section 182(b)(2) RACT requirement: (1) RACT for sources covered by an existing CTG—i.e., a CTG issued prior to the enactment of the CAA of 1990; (2) RACT for sources covered by a post-enactment CTG; and (3) all major sources not covered by a CTG. This section of the CAA requires nonattainment areas that previously were exempt from [certain] RACT requirements to ''catch up'' to those nonattainment areas that became subject to those requirements during an earlier period. In addition, it requires newly designated ozone nonattainment areas to adopt RACT rules consistent with those required for previously designated nonattainment areas. Since the Charlotte area was previously required to adopt RACT for Groups I and II CTG's, to meet the RACT catch-up requirement the State needed to submit RACT rules for Group III CTG's and major non-CTG sources for the pre-enactment nonattainment area.

In addition to the pre-enactment nonattainment area retaining its nonattainment designation, EPA also extended the nonattainment area boundaries to include Gaston County (56 FR 56694). Therefore, these portions of the extended nonattainment area also are subject to RACT as defined in section 182(b)(2). Also, under the RACT catch-up provision of section 182(b)(3), the State was required, for these portions of the nonattainment area, to submit RACT rules covering all pre-enactment CTGs, to identify all sources the State anticipates will be covered by a post enactment CTG and to submit non-CTG rules for all remaining major sources—100 tons per year—of VOC emissions.

EPA is approving the following revisions to the North Carolina SIP, because they are consistent with the requirements set forth in the Clean Air Act.

15A NCAC 2D .0518 Miscellaneous Volatile Organic Compound Emissions

North Carolina amended this rule to prohibit sources located in the new O_3 nonattainment areas that were covered by the grandfathering provision in the coating regulations in section 15A NCAC 2D .0900 from continuing to be covered by the grandfathering provision.

15A NCAC 2D .0901 Definitions

North Carolina amended this rule to change the definition of ''potential to emit,'' ''topcoat,'' and ''volatile organic compounds.'' The revisions are consistent with EPA definitions for these terms.

15A NCAC 2D .0902 Applicability

North Carolina amended this rule to extend the RACT regulations to the new and expanded O_3 nonattainment areas. The exemption for plant sites that have the potential to emit less than 100 tons per year is being deleted.

15A NCAC 2D .0907 Compliance Schedules for Sources in Nonattainment Areas

North Carolina amended this rule to establish compliance schedules for sources located in the new nonattainment areas. These schedules are consistent with requirements for implementation in the CAA.

15A NCAC 2D .0910 Alternative Compliance Schedules

North Carolina amended this rule to extend it to new and expanded O_3 nonattainment areas. This rule sets forth procedures to follow for establishing alternative compliance with applicable rules in section 15A NCAC 2D .0900.

15A NCAC 2D .0911 Exception From Compliance Schedules

North Carolina amended this rule to extend it to new and expanded nonattainment areas for O_3. This rule exempts sources from compliance schedules in 15A NCAC 2D .0907 that are already in compliance with applicable rules in 15A NCAC 2D .0900.

15A NCAC 2D .0936 Graphic Arts

North Carolina amended this rule to exempt facilities where the potential emissions of VOCs are less than 100 tons per year. The equivalency calculation method is also being clarified.

15A NCAC 2D .0947 Manufacture of Synthesized Pharmaceutical Products

This is a new rule that limits emissions of VOCs from synthesized pharmaceutical products manufacturing facilities.It is consistent with EPA's CTG for Pharmaceutical facilities.

15A NCAC 2D .0948 VOC Emissions From Transfer Operations

This is a new rule that limits the emission of VOCs from transfer operations not elsewhere covered in section 15A NCAC 2D .0900. These requirements are the same as those which currently apply to such operations.

15A NCAC 2D .0949 Storage of Miscellaneous Volatile Organic Compounds

This is a new rule that limits emissions of VOCs from storage of VOCs not elsewhere covered in section 15A NCAC 2D .0900. These requirements are the same as those that currently apply to such operations.

15A NCAC 2D .0950 Interim Standards for Certain Source Categories

This is a new rule covering various source categories for which RACT guidelines are being developed. The purpose of this rule is to require major sources in these categories to reduce emissions by at least 85 percent by weight until specific regulations are adopted for these source categories establishing specific RACT control requirements. The specific RACT requirements for these sources will be addressed in a separate document.

However, North Carolina has not fully met the VOC RACT Catch-Up requirement by the approval of this rule. States are required to adopt and submit rules for each of the eleven source categories listed in the April 16, 1992, General Preamble (57 FR 13498), by November 15, 1994, even if no CTG has been issued. Since EPA has not issued those CTGs, the states must submit regulations requiring a RACT level of control for sources in those categories. North Carolina was notified of this requirement in a letter from EPA Region IV Air Programs Branch dated, September 26, 1994.

15A NCAC 2D .0951 Miscellaneous Volatile Organic Compound Emissions

This is a new rule that establishes control requirements for sources of VOCs not elsewhere covered in section 15A NCAC 2D .0900 that use VOCs as solvents, carriers, material processing media, or industrial chemical reactants or in other similar uses.

15A NCAC 2D .0952 Petition for Alternative Controls

This is a new rule that establishes procedures to follow to allow alternative controls to those required in section 15A NCAC 2D .0900.

Final Action

In this document, EPA is approving the revisions to the North Carolina Environmental Management regulations listed above. The EPA is publishing this action without prior proposal because the EPA views this as a noncontroversial amendment and

anticipates no adverse comments. However, in a separate document in this **Federal Register** publication, the EPA is proposing to approve the SIP revision should adverse or critical comments be filed. This action will be effective March 27, 1995 unless, by February 27, 1995, adverse or critical comments are received.

If the EPA receives such comments, this action will be withdrawn before the effective date by publishing a subsequent document that will withdraw the final action. All public comments received will then be addressed in a subsequent final rule based on this action serving as a proposed rule. The EPA will not institute a second comment period on this action. Any parties interested in commenting on this action should do so at this time. If no such comments are received, the public is advised that this action will be effective March 27, 1995.

The EPA has reviewed this request for revision of the federally-approved SIP for conformance with the provisions of the 1990 Amendments enacted on November 15, 1990. The EPA has determined that this action conforms with those requirements irrespective of the fact that the submittal preceded the date of enactment.

Under section 307(b)(1) of the Act, 42 U.S.C. 7607 (b)(1), petitions for judicial review of this action must be filed in the United States Court of Appeals for the appropriate circuit by March 27, 1995. Filing a petition for reconsideration by the Administrator of this final rule does not affect the finality of this rule for purposes of judicial review nor does it extend the time within which a petition for judicial review may be filed, and shall not postpone the effectiveness of such rule or action. This action may not be challenged later in proceedings to enforce its requirements. (See section 307(b)(2) of the Act, 42 U.S.C. 7607 (b)(2).)

The OMB has exempted these actions from review under Executive Order 12866.

Nothing in this action shall be construed as permitting or allowing or establishing a precedent for any future request for a revision to any SIP. Each request for revision to the SIP shall be considered separately in light of specific technical, economic, and environmental factors and in relation to relevant statutory and regulatory requirements.

Under the Regulatory Flexibility Act, 5 U.S.C. 600 *et seq.*, EPA must prepare a regulatory flexibility analysis assessing the impact of any proposed or final rule on small entities. 5 U.S.C. 603 and 604. Alternatively, EPA may certify that the rule will not have a significant impact on a substantial number of small entities. Small entities include small businesses, small not-for-profit enterprises, and government entities with jurisdiction over populations of less than 50,000.

SIP approvals under 110 and subchapter I, part D of the CAA do not create any new requirements, but simply approve requirements that the State is already imposing. Therefore, because the Federal SIP-approval does not impose any new requirements, I certify that it does not have a significant impact on any small entities affected. Moreover, due to the nature of the Federal-state relationship under the CAA, preparation of a regulatory flexibility analysis would constitute Federal inquiry into the economic reasonableness of state action. The CAA forbids EPA to base its actions concerning SIPs on such grounds. *Union Electric Co.* v. *U.S. E.P.A.*, 427 U.S. 246, 256–66 (S.Ct. 1976); 42 U.S.C. 7410(a)(2).

List of Subjects in 40 CFR Part 52

Environmental protection, Air pollution control, Carbon monoxide, Hydrocarbons, Incorporation by reference, Intergovernmental relations, Nitrogen dioxide, Ozone, Reporting and recordkeeping requirements, Sulfur oxides.

Dated: January 3, 1995.

Patrick M. Tobin,

Acting Regional Administrator.

Part 52 of chapter I, title 40, Code of Federal Regulations, is amended as follows:

PART 52—[AMENDED]

1. The authority citation for part 52 continues to read as follows:

Authority: 42.U.S.C. 7401–7671q.

Subpart II—[Amended]

2. Section 52.1770 is amended by adding paragraph (c)(77) to read as follows:

§ 52.1770 Identification of plan.

* * * * *

(c) * * *

(77) Revisions to the VOC RACT regulations, and other miscellaneous revisions to the North Carolina State Implementation Plan which were submitted on January 7, 1994.

(i) Incorporation by reference.

(A) Amendments to North Carolina regulations 15A NCAC 2D .0518, 2D.0531, 2D.0532, 2D.0901, and 2D.0936, effective on December 1, 1993.

(B) Amendments to North Carolina regulations 15A NCAC 2D.0902, 2D.0907, 2D.0910, 2D.0911, 2D.0947, 2D.0948, 2D.0949, 2D.0950, 2D.0951, and 2D.0952 effective on July 1, 1994.

(ii) Other material. None.

[FR Doc. 95–1934 Filed 1–25–95; 8:45 am]

BILLING CODE 6560–50–F

---

40 CFR Part 799

[OPPTS–42178; FRL–4925–9]

RIN 2070–AB94

Testing Consent Order for Glycidyl Methacrylate

AGENCY: Environmental Protection Agency (EPA).

ACTION: Final Consent Agreement and Order; Final Rule.

SUMMARY: EPA has issued a Testing Consent Order (Order) that incorporates an Enforceable Consent Agreement (ECA) pursuant to the Toxic Substances Control Act (TSCA) with Air Products and Chemicals, Inc., The Dow Chemical Company, Mitsubishi Gas Chemical America, Inc., NOF America Corporation, and San Esters Corporation (the Companies). The Companies have agreed to perform certain health effects tests on glycidyl methacrylate (GMA; CAS No. 106–91–2). This document summarizes the ECA, adds GMA to the list of chemical substances and mixtures subject to testing consent orders, and announces that export notification requirements apply to GMA.

EFFECTIVE DATE: January 26, 1995.

FOR FURTHER INFORMATION CONTACT: Jim Willis, Acting Director, Environmental Assistance Division (7408), Office of Pollution Prevention and Toxics, Rm. E–543B, 401 M St., SW., Washington, DC 20460, (202) 554–1404, TDD (202) 554–0551.

SUPPLEMENTARY INFORMATION: This document amends 40 CFR 799.5000 by adding GMA to the list of chemical substances and mixtures subject to testing consent orders and export notification requirements.

I. Background

GMA, a glycidol derivative, is an epoxy resin additive used in paint coating formulations and adhesive applications. Its annual production volume is less than 5 million pounds. Approximately 42,000 workers may be exposed to GMA.

In its third report to the EPA Administrator, published in the **Federal Register** on October 30, 1978 (43 FR 50630), the Interagency Testing Committee (ITC) designated the category of glycidol and its derivatives

(collectively referred to as ''glycidyls'') for priority consideration for health effects testing with regard to the following endpoints: carcinogenicity, mutagenicity, teratogenicity, and other adverse health effects, with particular emphasis on the reproductive system. Epidemiological studies were also recommended. The rationale for the original designation is discussed in the same **Federal Register** notice. This chemical category was defined by the ITC as all substances with the general formula:

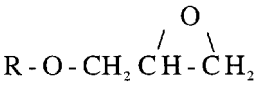

where R is a hydrogen atom or any alkyl, aryl, or acyl group. R is unrestricted as to the number and type of substituents it may carry.

On December 30, 1983, EPA published an advance notice of proposed rulemaking (ANPR) in the **Federal Register** (48 FR 57562) to require testing glycidyls under section 4(a) of TSCA.

In the November 7, 1991 **Federal Register** (56 FR 57144), EPA published the Notice of Proposed Rulemaking for Glycidol and its Derivatives. EPA evaluated the testing needs for glycidyls as described in Unit I.D. of the Notice of Proposed Rulemaking for Glycidol and its Derivatives. In this notice, EPA proposed that GMA manufacturers test GMA for subchronic toxicity, developmental toxicity, and subchronic neurotoxicity (functional observation battery, motor activity, and neuropathology). Mutagenicity testing (a sex-linked recessive lethal assay and a rodent dominant lethal assay) was proposed for glycidyl acrylate as a representative test substance for Subgroup VII–B of the glycidyls, of which GMA was the other member.

II. Enforceable Consent Agreement Negotiations

On July 17, 1992, EPA published a **Federal Register** notice (57 FR 31714) announcing an ''open season.'' The ''open season'' was a time during which manufacturers could submit to EPA proposals for testing chemical substances which had been proposed for testing by EPA but had not been subject to a final test rule. In that notice, EPA indicated that it would review the submissions and select candidates for negotiation of ECAs pursuant to 40 CFR part 790. EPA also indicated that it would later publish a **Federal Register** notice soliciting persons interested in participating in or monitoring negotiations for the development of ECAs on the chemical substances selected.

On September 15, 1992, the Companies submitted a proposal for testing GMA under an ECA (Ref. 1). The Companies proposed subchronic toxicity testing (including an evaluation of male reproductive function), subchronic neurotoxicity testing (functional observational battery, motor activity, neuropathology, and electrophysiology), and reproductive toxicity testing.

On March 30, 1993, EPA published a **Federal Register** notice (58 FR 16669) establishing EPA's priority for initiating ECA negotiations on certain chemical substances. The notice identified GMA as a Tier II chemical substance for which some factors were considered favorable to proceed towards negotiating an ECA. This notice and another **Federal Register** notice (58 FR 19253, April 13, 1993) gave manufacturers the opportunity to supplement their test proposals for Tier II chemical substances, including GMA.

In response to the April 13, 1993 **Federal Register** notice, on April 26, 1993, the Companies submitted a supplement to their September 15, 1992 proposal (Ref. 2).

On August 18, 1993, EPA published a **Federal Register** notice (58 FR 43893) that solicited interested parties to participate in or monitor ECA negotiations on GMA.

On November 18, 1993, the Companies submitted a draft proposed ECA package for GMA (Ref. 3) that offered subchronic toxicity testing (including an evaluation of male reproductive function), subchronic neurotoxicity testing (functional observational battery, motor activity, neuropathology, and electrophysiology), and developmental toxicity testing.

EPA held a public meeting attended by representatives of the Companies and other interested parties on July 27, 1994. During the public meeting and following the meeting (Refs. 4, 5, and 6), consensus was reached on the tests to be included in the ECA (See Table 1, ''Required Testing, Test Standards and Reporting Requirements for GMA'', below.).

On October 18, 1994, EPA received the ECA signed by the Companies. On January 13, 1995, EPA's Assistant Administrator for Prevention, Pesticides and Toxic Substances signed the ECA and accompanying Order.

III. Proposed Test Rule

EPA has decided not to finalize the proposed test rule for GMA contained in the proposed test rule for the category glycidol and its derivatives (56 FR 57144, November 7, 1991). EPA has instead reached agreement with the companies that the GMA testing requirements in the proposed rule will be met by implementing the ECA and Order, and that the issuance of the ECA and Order constitutes final EPA action for purposes of 5 U.S.C. 704. Should EPA in the future decide that it requires additional data on GMA, the Agency will initiate a separate action.

IV. Testing Program

Table 1 describes the required testing, test standards, and reporting requirements for GMA under the ECA. This testing program will allow EPA to further characterize the potential health hazards resulting from exposure to GMA.

TABLE 1.—REQUIRED TESTING, TEST STANDARDS AND REPORTING REQUIREMENTS FOR GMA

Description of Tests	Test Standard (40 CFR citation)	Deadline for Final Report[1] Months	Interim Reports[2] Required Number
90 Day Subchronic Toxicity Study (Inhalation in rats)	(Appendix I.)	24	3
Functional Observation Battery: Subchronic (Inhalation in rats)	(Appendix II.)	24	3
Motor Activity Test: Subchronic (Inhalation in rats)	(Appendix II.)	24	3
Neuropathology: Subchronic (Inhalation in rats)	(Appendix II)	24	3
Functional Observation Battery: Acute (Inhalation in rats)[3]	798.6050	12[4]	1
Motor Activity Test: Acute (Inhalation in rats)[3]	798.6200	12[4]	1
Neuropathology: Acute (Inhalation in rats)[3]	798.6400	12[4]	1
Developmental Toxicity (Inhalation in New Zealand White Rabbits)	(Appendix III.)	15	2
Mutagenicity:.			

TABLE 1.—REQUIRED TESTING, TEST STANDARDS AND REPORTING REQUIREMENTS FOR GMA—Continued

Description of Tests	Test Standard (40 CFR citation)	Deadline for Final Report[1] Months	Interim Reports[2] Required Number
In vivo Mammalian Bone Marrow Cytogenetics Analysis—IP OR In vivo Mammalian Bone Marrow Cytogenetics Test: Micronucleus Assay—IP.	798.5385 OR 798.5395	24	3
Gene Mutations in Somatic Cells in Culture	798.5300	10	1

[1] Number of months after the effective date of the consent order.
[2] Interim reports are required every 6 months from the effective date until the final report is submitted. This column shows the number of interim reports required for each test.
[3] If EPA determines that the results of the subchronic neurotoxicity studies are not negative, then the acute neurotoxicity studies must be performed.
[4] Figure indicates the reporting deadline, in months, calculated from the date of notification to the test sponsor by certified letter or FEDERAL REGISTER notice that the Agency has determined this required testing must be performed.

V. Export Notification

The issuance of the ECA and Order subjects any persons who export or intend to export the chemical substance GMA (CAS No. 106–91–2), of any purity, to the export notification requirements of section 12(b) of TSCA. The listing of a chemical substance or mixture at 40 CFR 799.5000 serves as notification to persons who export or intend to export such chemical substance or mixture that the substance or mixture is the subject of an ECA and Order and that 40 CFR part 707 applies.

VI. Public Record

EPA has established a record for this ECA and Order under docket number OPPTS–42178, which is available for inspection Monday through Friday, excluding legal holidays, in Rm. NE B607, 401 M St., SW., Washington, DC, 20460 from Noon to 4 p.m. Information claimed as Confidential Business Information (CBI), while part of the record, is not available for public review. This record contains the basic information considered in developing this ECA and Order, and consists of the following information:

A. Supporting Documentation

(1) Testing Consent Order for GMA, with incorporated Enforceable Consent Agreement and associated testing protocols attached as appendices.

(2) **Federal Register** notices pertaining to this notice, the Testing Consent Order and the Enforceable Consent Agreement, consisting of:

(a) ''Third Report of the Interagency Testing Committee; Receipt of the Report and Request for Comments'' (43 FR 50630, October 30, 1978).

(b) Advance Notice of Proposed Rulemaking for Glycidol and its Derivatives (48 FR 57562, December 30, 1983).

(c) Notice of Proposed Rulemaking for Glycidol and its Derivatives (56 FR 57144, November 7, 1991).

(d) Notice of Opportunity to Initiate Negotiations for TSCA Section 4 Testing Consent Agreements (57 FR 31714, July 17, 1992).

(e) Notice of Testing Consent Agreement Development for Tier I Chemical Substances; Solicitation for Interested Parties (58 FR 16669, March 30, 1993).

(f) Notice of Testing Consent Agreement Development for Tiers II and III Chemical Substances; Reopening of Comment Period (58 FR 19253, April 13, 1993).

(g) Notice of Testing Consent Agreement Development for Listed Chemical Substances; Solicitation for Interested Parties (58 FR 43893, August 18, 1993).

(3) Communications consisting of:

(a) Written Letters.

(b) Telephone contact reports.

(c) Meeting summaries.

(4) Reports - published and unpublished factual materials.

B. References

1. Glycidyl Methacrylate Manufacturers Group. Letter from Patrick J. Hurd to Gary E. Timm. Proposed Testing Program for Glycidyl Methacrylate. Washington, DC. (September 15, 1992).

2. Glycidyl Methacrylate Industry Group. Letter from Patrick J. Hurd to TSCA Public Docket Office. Supplement to Glycidyl Methacrylate Testing Proposal. Washington, DC. (April 26, 1993).

3. Glycidyl Methacrylate Industry Group. Letter from Patrick J. Hurd to Charles M. Auer. Draft Enforceable Consent Agreement Proposal for Glycidyl Methacrylate. Washington, DC. (November 18, 1993).

4. EPA. Memorandum from Deborah O. Norris to Charles M. Auer. Use of Subchronic Neurotoxicity Testing as a Trigger for Acute Testing as Suggested by Industry Panel on GMA. Washington, DC. (August 4, 1994).

5. Glycidyl Methacrylate Industry Group. Letter from Patrick J. Hurd to Charles M. Auer. Use of Acute Tests and Subchronic Neurotoxicity Testing as Triggers for Acute Neurotoxicity Testing. Washington, DC. (September 1, 1994).

6. EPA. Letter from Charles M. Auer to Patrick J. Hurd. Glycidyl Methacrylate Enforceable Consent Agreement; Final Draft for Test Sponsors' Signatures. Washington, DC. (September 28, 1994).

VII. Regulatory Assessment Requirements

The Office of Management and Budget (OMB) has approved the information collection requirements contained in the ECA under the provisions of the Paperwork Reduction Act of 1980, 44 U.S.C. 3501 et seq., and has assigned OMB control 2070–0033.

Public reporting burden for this collection of information is estimated to average 586 hours per response. The estimates include time for reviewing instructions, searching existing data sources, gathering and maintaining the data needed, and completing and reviewing the collection of information.

List of Subjects in 40 CFR Part 799

Chemicals, Chemical export, Environmental protection, Hazardous substances, Health effects, Laboratories, Reporting and recordkeeping requirements, Testing.

Dated: January 13, 1995.

Lynn R. Goldman,

Assistant Administrator for Prevention, Pesticides and Toxic Substances.

Therefore, 40 CFR chapter I, subchapter R, part 799 is amended as follows:

PART 799—[AMENDED]

1. The authority citation for part 799 continues to read as follows:

Authority: 15 U.S.C. 2603, 2611, 2625.

2. Section 799.5000 is amended by adding glycidyl methacrylate to the table in CAS Number order, to read as follows:

§799.5000 Testing Consent Orders for Substances and Mixtures with Chemical Abstract Service Registry Numbers.

* * * * * *

CAS Number	Substance or mixture name	Testing	FR Publication Date
*	* * * *	*	*
106–91–2	Glycidyl Methacrylate	Health effects	January 26, 1995
*	* * * *	*	*

[FR Doc. 95–1856 Filed 1–25–95; 8:45 am]

BILLING CODE 6560–50–F

Proposed Rules

Federal Register
Vol. 60, No. 17
Thursday, January 26, 1995

This section of the FEDERAL REGISTER contains notices to the public of the proposed issuance of rules and regulations. The purpose of these notices is to give interested persons an opportunity to participate in the rule making prior to the adoption of the final rules.

FEDERAL RESERVE SYSTEM

12 CFR Part 230

[Regulation DD; Docket No. R–0869]

Truth in Savings

AGENCY: Board of Governors of the Federal Reserve System.

ACTION: Proposed rule.

SUMMARY: The Board is publishing for public comment proposed amendments to Regulation DD (Truth in Savings) that would amend the current formula to factor the frequency of interest payments into the calculation of the annual percentage yield (APY), along with the interest rate paid and frequency of compounding. The proposal is intended to correct an anomaly under the current formula, to avoid misranking accounts that pay out interest (without compounding). The Board is also soliciting comment on an alternative approach that would use an internal rate of return formula to calculate the APY. The Board believes an APY that reflects the timing of interest payments would enhance comparison shopping among savings products, and the proposals provide two approaches for reaching that result. Institutions would not be required to change the nature of their accounts under either approach, nor would they be required to compound interest at the same frequency as they credit interest by check or transfer when consumers may receive interest payments or leave interest in the account. Separately published elsewhere in this issue of the **Federal Register**, the Board is adopting an interim rule for certain noncompounding multi-year certificates of deposit that would permit institutions to disclose an APY equal to the contract interest rate while the public is commenting on the proposal and the Board is evaluating those comments.

DATES: Comments must be received on or before March 20, 1995.

ADDRESSES: Comments should refer to Docket No. R–0869, and may be mailed to William W. Wiles, Secretary, Board of Governors of the Federal Reserve System, 20th Street and Constitution Avenue NW., Washington, DC 20551. Comments also may be delivered to Room B–2222 of the Eccles Building between 8:45 a.m. and 5:15 p.m. weekdays, or to the guard station in the Eccles Building courtyard on 20th Street NW. (between Constitution Avenue and C Street) at any time. Comments may be inspected in Room MP–500 of the Martin Building between 9:00 a.m. and 5:00 p.m. weekdays, except as provided in 12 CFR 261.8 of the Board's rules regarding availability of information.

FOR FURTHER INFORMATION CONTACT: Jane Ahrens, Senior Attorney, Kyung Cho-Miller, or Obrea Otey Poindexter, Staff Attorneys, Division of Consumer and Community Affairs, Board of Governors of the Federal Reserve System, at (202) 452–3667 or 452–2412; for questions associated with the regulatory analysis, Gregory Elliehausen, Economist, Office of the Secretary, at (202) 452–2504; for the hearing impaired only, Dorothea Thompson, Telecommunications Device for the Deaf, at (202) 452–3544.

SUPPLEMENTARY INFORMATION:

I. Background

The Truth in Savings Act (12 U.S.C. 4301 *et seq.*) requires depository institutions to provide disclosures to consumers about their deposit accounts, including an annual percentage yield (APY) on interest-bearing accounts calculated under a method prescribed by the Board. The APY is the primary uniform measurement for comparison shopping among deposit accounts. The law also contains rules about advertising, including the advertising of accounts at depository institutions offered to consumers by deposit brokers. The Board's Regulation DD (12 CFR part 230), which was adopted in September 1992 and became effective in June 1993, implements the act. (See 57 FR 43337, September 21, 1992, and 58 FR 15077, March 19, 1993.)

In adopting Regulation DD, the Board considered various approaches for calculating the APY, reflecting several competing interests and concerns. The current APY formula is simple and easy to use. It assumes that interest remains on deposit until maturity. This assumption produces an APY that has the effect of reflecting the time value of money in cases when interest payments are made at the same frequency as interest is compounded for funds that remain on deposit until maturity. It does not always reflect the time value of money when there are interest payments prior to maturity.

II. Proposals Affecting the APY

As deposit brokers began complying with the APY formula and the regulation's advertising rules, the Securities Industry Association (SIA) asked the Board to reconsider how the APY is calculated. The SIA objected to the fact that, for multi-year certificates of deposit (CDs) that are noncompounding but pay interest at least annually, the formula produces an APY that is less than the account interest rate. Disclosure of an APY lower than the interest rate did not, according to the SIA, always allow for meaningful comparison shopping among deposit accounts. The SIA argued that the APY should at least equal the account interest rate.

In December 1993, the Board published a proposal that factored into the APY calculation the specific time intervals for interest paid on the account—that is, the time value of money—and provided an additional internal rate of return formula (58 FR 64190, December 6, 1993). The proposal also offered an alternative limited change in the APY disclosure for multi-year noncompounding CDs; under this approach, institutions would disclose an APY equal to the account interest rate if the CDs paid interest at least annually. The proposal was withdrawn in May, based on considerations of cost and burden at that time (59 FR 24376, May 11, 1994).

Simultaneously with the withdrawal of the December proposal, in May 1994 the Board published a related proposal that addressed depository institutions' compounding and crediting practices. Under the May proposal, institutions offering accounts that paid interest by check (or transfer) or by posting interest to the account would have to post interest at least as often as they pay out interest by check. That is, for accountholders leaving the interest in the account, interest would compound on at least as frequent a basis as the interest payments made to others. For example, if an institution offered a two-

year CD, and would permit consumers to receive accrued interest in monthly interest checks or to permit interest to remain in the account, the institution would have to credit and compound interest at least monthly.

The May proposal also would treat the distribution of interest from the account as the equivalent of compounding. For example, if an institution sent consumers the interest payments (and did not permit consumers to leave interest in the account), the institution would treat the interest payment frequency as compounding in the APY calculation. Thus, for a two-year CD that requires consumers to receive an annual interest payment, the APY would reflect annual compounding.

In July, the Board extended the time to provide comments on the proposed amendments. At the same time, the Board reopened comment on the limited alternative that had been published in December 1993 and withdrawn in May 1994; that alternative equates the APY and the account interest rate for noncompounding multi-year CDs that pay interest at least annually (59 FR 35271, July 11, 1994).

The Board received about 550 comments on the proposal (including comments on the alternative approach involving noncompounding multi-year CDs). About 95% of the comments were from financial institutions. The remaining 5% were from trade associations, data processors, and others. Approximately 450 comments addressed the proposed amendments affecting the APY formula; about 2% were in favor of the proposal, 98% were opposed, most of them because of the proposed matching of compounding and crediting frequencies. About 100 commenters addressed the alternative that would equate the APY to the interest rate; nearly 60% supported this approach.

On January 4, 1995, the Board adopted one part of the May 1994 proposal. The Board voted to amend the definition of the APY to reflect the frequency of interest payments; it declined to adopt another portion of the May proposal that would have affected institutions' crediting and compounding policies. The Board also declined to adopt the alternative proposal published in July 1994 that equated the APY and the interest rate for multi-year, noncompounding certificates of deposit that make interest payments at least annually. The effective date for the Board's APY rule adopted on January 4 would permit institutions to comply immediately; compliance became mandatory in September 1995.

Subsequently, the Board received petitions for reconsideration from both the major banking industry trade associations and consumer advocates. The trade associations and consumer groups stated several reasons in their letters asking for reconsideration and protesting the Board's action, including that the public should have been given an opportunity to comment directly on the amendment requiring the APY to reflect the frequency of interest payments—as modified from the May proposal—before its adoption by the Board.

On January 17, in order to address the concerns raised by the petitioners regarding public comment and to ensure a full airing of all aspects of proposed amendments to the APY calculation and definition, the Board granted the petitions and decided to publish for further public comment the proposal adopted on January 4 as well as an alternative internal rate of return formula affecting the calculation of the APY. At the same time, the Board adopted an interim rule that would permit institutions to equate the APY and the contract interest rate for noncompounding multi-year accounts that mandate interest payouts at least annually. (See Docket R–0836 elsewhere in today's **Federal Register**.)

III. Factoring the Time Value of Interest Payments Into the APY

Based on the comments received and upon further analysis, the Board is proposing to reflect the frequency of interest payments in the calculation of the APY, along with the interest rate paid and frequency of compounding. This proposed amendment would factor the time value of interest payments into the APY calculation using the current formula. It is a modified version of the May 1994 proposal. The proposal would apply to all account types.

This approach could be more helpful to consumers who comparison shop among deposit accounts and other investment products. For example, it could allow consumers more easily to compare accounts that require the distribution of interest payments with those that permit consumers to receive payments, such as when two institutions offer a two-year CD with a 6.00% interest rate and semi-annual payouts (mandatory with Institution A and optional by Institution B). If the APY reflected the timing of interest payments, both institutions would disclose a 6.09% APY to a consumer who receives payouts. Currently, the APYs disclosed may differ. Both institutions would disclose a 5.83% APY if interest left in the account does not compound. Institution B, however, would disclose a 6.00% APY if interest left in the account compounds annually, even though payments are made on the same basis as Institution A.

The Board is also soliciting comment on an alternative approach to factor the time value of money into the APY. It would require an additional formula to calculate the APY—the internal rate of return formula proposed in December 1993. Both proposals would reflect the time value of money, and, as the table below illustrates, the APY would reflect this value. The example illustrates the effect of receiving interest payments during the term for a noncompounding 2-year CD at a 6% interest rate.

Frequency of interest pay outs	APY under current rule (percent)	APY under proposed rules (percent)
Annual	5.83	6.00
Semi-annual	5.83	6.09
Quarterly	5.83	6.14
Monthly	5.83	6.17

Under this proposal, the amendments to Regulation DD adopted in the interim rule would be replaced, if the final rule adopts either of the proposed amendments using the current APY formula or the alternative APY calculation method using an internal rate of return formula.

May 1994 Proposal Affecting Compounding and Crediting Frequencies

One part of the May 1994 proposal would have required institutions to match crediting and compounding policies for accounts where consumers may receive interest payments or leave interest in the account. It also would have clarified when interest becomes principal and defined ''crediting'' and ''compounding.'' The Board recognizes that the commenters raised valid concerns about this approach, and because of these concerns the Board is not considering those aspects of the May proposal in this proposed rule. Neither of the proposals under consideration would require institutions to compound interest at the same frequency as the institution credits interest by check or transfer for accounts where consumers may receive interest payments or leave interest in the account.

IV. Proposed Regulatory Revisions: Section-by-Section Analysis

Section 230.2—Definitions

2(c) Annual Percentage Yield

The act and regulation define the APY as the total amount of interest that

would be received based on the interest rate and the frequency of compounding for a 365-day year. The proposed amendment would broaden the definition to treat the distribution of interest from the account (through interest checks or transfer) as the equivalent of compounding. For instance, if an institution pays a 6.00% interest rate on an account, the same APY of 6.17% would result whether an institution compounds monthly or sends out monthly interest payments. The Board is concerned that the current formula misranks certain alternatives, and is seeking comment about whether the proposed changes would better accomplish the Congressional purpose.

The Board solicits comment on whether an exception should be made to the definition of APY to factor in the timing of interest distributions, and whether the purpose of the regulation—enabling consumers to make informed decisions about deposit accounts—is better met if the APY captures the time value of interest received as an interest payment during the term of the account, as well as by compounding.

Section 230.3—General Disclosure Requirements

3(e) Oral Response to Inquiries

The regulation requires institutions to state the annual percentage yield in an oral response to a consumer's inquiry about interest rates payable on its accounts. The proposal would add a brief disclosure about the APY, to assist consumers in understanding the earnings and APY for the account. When responding orally to a consumer's inquiry about interest rates, institutions would be required to state the APY and the corresponding frequency of compounding or interest distribution. For example, if an institution offers a two-year CD with a 6.00% interest rate and compounds interest semi-annually but permits monthly interest checks, the oral response to a consumer who inquires about interest rates for a two-year CD could be ''6.17%, based on monthly checks'' (or ''6.09%, based on semi-annual compounding,'' or both).

Section 230.4—Account Disclosures

4(b) Content of Account Disclosures

4(b)(1) Rate Information

4(b)(1)(iii) Effect of Interest Payments

The act and regulation require institutions to disclose the APY and interest rate before an account is opened or upon request. A brief disclosure for APYs is proposed, to assist consumer understanding of an APY based on the frequency of interest payments in addition to compounding. The disclosure requirement would apply to all account types (money market deposit accounts as well as CDs, for example). If the annual percentage yield is based (in whole or in part) on interest distributions, institutions would be required to disclose the interest distribution frequency and include a statement that the annual percentage yield assumes interest payments are immediately reinvested at the account's interest rate. If an institution offers a two-year CD with a 6.00% interest rate and compounds interest semi-annually but permits monthly interest checks, for example, consumers choosing to receive interest by check each month would receive a disclosure such as ''You will earn a 6.17% APY, based on monthly checks. The annual percentage yield assumes you immediately reinvest your interest payment at the account interest rate.'' (Consumers choosing semi-annual compounding would receive disclosures about the compounding frequency under § 230.4(b)(2).) The new disclosure would also apply to accounts where interest compounds prior to the distribution of interest. For example, if an institution offers an account with a 6.00% interest rate, monthly compounding, and quarterly interest checks, the APY would be 6.17%, based on the assumption that the quarterly checks (which reflect monthly compounding) are reinvested at the account interest rate and compounding frequency. Consumers would receive a disclosure such as ''You will earn a 6.17% APY, based on monthly compounding. The annual percentage yield assumes you immediately reinvest your interest payment at the account interest rate.''

4(b)(6) Features of Time Accounts

4(b)(6)(iii) Withdrawal of Interest Prior to Maturity

The regulation currently requires a disclosure for institutions offering time accounts that compound interest and permit a consumer to withdraw accrued interest during the account term. The disclosure states that the APY assumes interest remains on deposit until maturity and that a withdrawal will reduce earnings. The proposal would eliminate the disclosure, since the APY would no longer reflect the assumption that interest remains on deposit until maturity. Further, under the proposal, consumers would receive transaction-specific disclosures reflecting their interest payment choice.

Section 230.5—Subsequent Disclosures

5(a) Change in Terms

5(a)(2) No Notice Required

5(a)(2)(iv) Changes to the Frequency of Interest Payments Initiated by the Consumer

The act and regulation require institutions to give 30-days' advance notice of any change in the account disclosures if the change might reduce the APY or adversely affect the consumer. The proposal would create an exception for changes to the interest-payment intervals that are initiated by the consumer. For example, if a consumer receives monthly interest payments on an account and prior to maturity requests the institution to start making payments semi-annually, no advance notice would be required. However, if an institution that permits interest payments monthly eliminates that payment option during the term of an account, advance notice of the change would be required for consumers who are receiving monthly payments.

Section 269 of the act authorizes the Board to make adjustments and exceptions that are necessary or proper to carry out the purposes of the act. The Board solicits comment on whether the proposed exception to the change-in-terms notice requirements should be made.

Section 230.8—Advertising

8(c) When Additional Disclosures Are Required

8(c)(7) Effect of Compounding or Interest Distributions

The act and regulation provide that when an APY is stated in an advertisement, additional disclosures are required. For the same reasons as discussed for account disclosures requirements, institutions that advertise an APY would be required to indicate whether the APY is based on the frequency of interest checks or compounding. The Board believes it is important that consumers who use advertisements to comparison-shop are alerted to this assumption, to avoid potential confusion or misunderstanding. Similarly, if an APY is based in whole or in part on interest distributions, the advertisement would have to alert consumers that the APY assumes that interest received is reinvested at the account interest rate. For example, if an institution advertises a two-year CD with a 6.00% interest rate, monthly compounding, and quarterly interest checks, the institution must include in the advertisement a

disclosure such as ''You will earn a 6.17% APY, based on monthly compounding and quarterly checks. The annual percentage yield assumes you immediately reinvest your interest payment at the account interest rate.'' The Board also proposes to amend paragraph (e) of this section, which exempts certain types of advertisements from some disclosure requirements.

Appendix A to Part 230—Annual Percentage Yield Calculation

The proposed amendment that would factor the time value of interest payments into the APY calculation using the current formula (the modified version of the May 1994 proposal) is discussed below as ''Alternative 1.'' The alternative approach that would use an internal rate of return formula to calculate the APY (proposed in December 1993) is discussed as ''Alternative 2.''

Both approaches would incorporate two assumptions to provide greater flexibility and to ease compliance. First, institutions could calculate the APY by assuming an initial deposit amount of $1,000. Or, institutions could factor in the actual dollar amount of a deposit, although the Board notes that the effects of rounding interest paid on a very small deposit amount such as $25 can produce a skewed APY.

Second, if interest is paid out monthly, quarterly, or semi-annually, institutions could base the number of days either on the actual number of days for those intervals or on an assumed number of days (30 days for monthly distributions, 91 days for quarterly distributions, and 182 days for semiannual distributions). Appendix A permits institutions to use a similar assumption for determining the number of days in the term of a ''three-month'' or ''six-month'' time account, for example. (Of course, if the institution chooses to use 91 days as the number of days for each quarter, it must also use 91 days to compute interest for those quarters. And see § 230.7, which requires institutions to pay interest on the full principal balance in the account each day.) To illustrate, assume the institution sends interest payments at the end of each calendar month to consumers with six-month CDs. If the institution bases its APY calculation on an assumed term of 183 days, the institution could calculate the effect of monthly interest payments by using the actual days in each calendar month or assuming five 30-day intervals and one 33-day interval.

Also, footnote 3 would be deleted as unnecessary, since both alternatives specifically factor in when interest payments are made on an account.

The following illustrates the differences in the two calculation methods under Alternative 1 and Alternative 2. If an institution offers a noncompounding two-year stepped-rate CD that pays a 5.00% interest rate in the first year and a 10.00% interest rate the second year and sends annual interest checks of $50 and $100 on a $1,000 deposit, the APY would be 7.47% under Alternative 1 (the proposed amendment using the current formula), and 7.41% using the internal rate of return formula (Alternative 2). If a noncompounding two-year stepped-rate CD paid a 10.00% interest rate in the first year and a 5.00% interest rate the second year and the institution sends annual interest checks of $100 and $50 on a $1,000 deposit, the APY would be 7.47% under Alternative 1 and 7.59% under Alternative 2.

Alternative 1: Modifying the Current APY Formula

Part I. Annual Percentage Yield for Account Disclosures and Advertising Purposes

A. General Rules

Under Alternative 1, the Board would amend the definition of ''interest'' in the APY formula to provide that institutions must factor in the timing of interest payments, if interest payments occur more frequently than any compounding. In effect, the interest payment would be treated as if the interest were compounded. For example, if an institution offers a two-year CD with a 6.00% interest rate and annual compounding and offers interest payments semi-annually to the consumer by check or transfer to another account, the ''Interest'' figure used in the APY formula would be $125.51 on a $1,000 deposit for the consumer who chooses semi-annual interest payments. This is the dollar amount of interest earned for a two-year CD with a 6.00% interest rate that compounds semi-annually. The APY for the account with semi-annual interest payments would be 6.09%. For the consumer who leaves interest in the account for annual compounding, the ''interest'' figure would be $123.60 and the APY 6.00%. On the other hand, if the same CD offered daily compounding and monthly interest checks (with daily compounding), the imputed interest figure would be $127.49, which reflects daily compounding and the assumption that the monthly interest checks are reinvested at the daily compounding rate. The APY would be 6.18% for consumers who leave interest in the account and for those who receive monthly interest checks. In this case (when interest compounds more frequently than interest is distributed), the APY would be based on the compounding frequency. On the other hand, if the institution offers daily compounding to those consumers who leave interest in the account and does not compound interest if consumers choose to receive monthly interest checks, the APY would be 6.17% for the ''monthly check'' account. In another example, if an institution compounds monthly but offers consumers the option of receiving interest checks quarterly or semi-annually, the APY would be based on monthly compounding. The APY would be 6.17%. Two examples would be added to illustrate the new rule.

Alternative 2: Adding an Internal Rate of Return Formula

Part I. Annual Percentage Yield for Account Disclosures and Advertising Purposes

A. General Rules

2. Formula for all Accounts

Under Alternative 2, the Board would add a standard internal rate of return formula which produces an APY that reflects the timing of interest payments. The new formula could be used for all accounts. It would have to be used for accounts that pay interest prior to the maturity of the account. For example, institutions would use the formula to calculate the APY for a one-year time account that compounds semi-annually and for which the consumer receives interest payments during the year.

The APY is determined directly from the proposed formula. For an internal rate of return program that is standard for most calculators and software, calculations would consider the amount and days at which payments are made in relation to the amount and day of the deposit. Using standard programs, the calculation will result in a daily yield, which is annualized to produce the APY.[1]

3. Formula for Certain Accounts

Institutions could continue to use the APY formulas currently in Appendix A for accounts with a single interest payment made at maturity (whether or not compounding occurs prior to maturity).

[1] Annual percentage yield = $((\text{daily yield}/100 + 1)^{365} - 1) \times 100$.

B. Stepped-Rate Accounts (Different Rates Apply in Succeeding Periods)

An additional example is proposed to illustrate the use of the new formula.

C. Variable-Rate Accounts

The proposal modifies the example in this paragraph to illustrate the use of the proposed new formula.

Appendix B to Part 230—Model Clauses and Sample Forms

The proposed amendments to model clauses and sample forms would address disclosure issues raised by factoring the timing of interest payments into the APY, under the proposed amendments using the current APY formula or an internal rate of return formula.

B–1 Model Clauses for Account Disclosures

An additional model clause (a)(v) is proposed to describe the effect of interest payments on the APY.

Clause (b)(i) provides model language that may be used to disclose the frequency of an institution's compounding and crediting practices. The proposal adds a new sentence providing model language to use when interest is credited by check payments or transfer to another account.

In accord with the proposed removal of paragraph 4(b)(6)(iii), the Board also proposes to remove clause (h)(iii), and to redesignate clause (h)(iv) as (h)(iii).

B–7 Sample Form

Given the proposed removal of paragraph 4(b)(6)(iii) and model clause B–1(h)(iii), the proposal would remove the last two sentences in the first paragraph of the sample form.

B–10 Sample Form

The proposed new sample form illustrates a disclosure for a CD that offers consumers the options to compound interest or to receive interest on a more frequent basis. The form discloses which interest payment option was chosen, and an APY reflecting that choice.

V. Interpretive Guidance

APY Disclosures for Accounts Offering Multiple Payment and Compounding Options

In addition to disclosing the APY before an account is opened, institutions must state an APY when responding to consumers' requests for written information about an account or to an oral inquiry about rates. (See 12 CFR 230.4(a) and 12 CFR 230.3(e).) In a consumer account advertisement, institutions must disclose any rate stated as the APY (see 12 CFR 230.8(b)) and may also state the interest rate. Also, the regulation requires institutions to provide disclosures, including the APY, prior to maturity of automatically renewing time accounts. (12 CFR 230.5(b)) The Board solicits comment on how institutions offering accounts with multiple payment and compounding options may comply with the regulation's requirements under § 230.4(a) (requests for account disclosures), § 230.3(e) (oral inquiries), § 230.8(b) (advertisements), and § 230.5(b) (disclosures for maturing rollover CDs) in a manner that best serves consumers who are comparison shopping. For example, comment is requested on whether an institution could state, along with any compounding and crediting frequency: (1) any currently available APY, such as, ''An annual percentage yield of 6.17% assumes you receive monthly interest payments,'' (2) the lowest and highest APYs for a given maturity, or (3) all APYs for the account.

VI. Form of Comment Letters

Comment letters should refer to Docket No. R–0869, and, when possible, should use a standard courier typeface with a type size of 10 or 12 characters per inch. This will enable the Board to convert the text in machine-readable form through electronic scanning, and will facilitate automated retrieval of comments for review. Also, if accompanied by an original document in paper form, comments may be submitted on 3½ inch or 5¼ inch computer diskettes in any IBM-compatible DOS-based format.

VII. Regulatory Flexibility Analysis and Paperwork Reduction Act

The Board's Office of the Secretary has previously prepared regulatory analyses on proposals to factor the timing of interest payments into the APY. Copies may be obtained from Publication Services, Board of Governors of the Federal Reserve System, Washington, D.C. 20551, at (202) 452–3245.

The proposed amendments would require institutions to disclose an APY that reflects the timing of interest payments as well as compounding. Either alternative would likely require one-time software modifications and changes to account disclosures and advertisements. The Board solicits comments on the likely costs for complying with the proposed amendments, and whether the costs to implement Alternative 1 (modifying the current formula) would differ significantly from those required to implement Alternative 2 (adding an internal rate of return formula).

In accordance with Section 3507 of the Paperwork Reduction Act of 1980 (44 U.S.C. 35; 5 CFR 1320.13), the proposed revisions will be reviewed by the Board under the authority delegated to the Board by the Office of Management and Budget after considering comments received during the public comment period.

List of Subjects in 12 CFR Part 230

Advertising, Banks, banking, Consumer protection, Federal Reserve System, Reporting and recordkeeping requirements, Truth in savings.

For the reasons set forth in the preamble, the Board proposes to amend 12 CFR part 230 as set forth below:

PART 230—TRUTH IN SAVINGS (REGULATION DD)

1. The authority citation for part 230 would continue to read as follows:

Authority: 12 U.S.C. 4301, *et seq.*

2. Section 230.2 would be amended by revising paragraph (c) to read as follows:

§ 230.2 Definitions.

* * * * *

(c) *Annual percentage yield* means a percentage rate reflecting the total amount of interest earned or imputed on an account, based on the interest rate and the frequency of compounding, or interest distributions from the account, for a 365-day period and calculated according to the provisions in Appendix A of this part.

* * * * *

3. Section 230.3 would be amended by revising the first sentence of paragraph (e) to read as follows:

§ 230.3 General disclosure requirements.

* * * * *

(e) *Oral response to inquiries.* In an oral response to a consumer's inquiry about interest rates payable on its accounts, the depository institution shall state the annual percentage yield, accompanied by the corresponding frequency of compounding or interest distribution.* * *

* * * * *

4. Section 230.4 would be amended as follows:

a. A new paragraph (b)(1)(iii) would be added,

b. Paragraph (b)(6)(iii) would be removed, and

c. Paragraph (b)(6)(iv) would be redesignated as paragraph (b)(6)(iii).

The addition would read as follows:

§ 230.4 Account disclosures.

* * * * *

(b) * * *

(1) * * *

(iii) *Effect of interest payments.* If the annual percentage yield is based in whole or in part on interest distributions:

(A) The interest distribution frequency.

(B) A statement that the annual percentage yield assumes the consumer immediately reinvests interest payments at the account's interest rate.

* * * * *

5. Section 230.5 would be amended by adding a new paragraph (a)(2)(iv) to read as follows:

§ 230.5 Subsequent disclosures.

(a) * * *

(2) * * *

(iv) *Changes to the frequency of interest payments initiated by the consumer.* Changes initiated by the consumer to the frequency of interest payments.

* * * * *

6. Section 230.8 would be amended as follows:

a. Paragraph (c)(6)(iii) would be removed;

b. A new paragraph (c)(7) would be added; and

c. Paragraph (e)(1) introductory text would be revised.

The addition and revision would read as follows:

§ 230.8 Advertising.

* * * * *

(c) * * *

(7) *Effect of compounding or interest distributions.* The frequency of compounding or interest distributions. If the annual percentage yield is based (in whole or in part) on interest distributions, a statement that the annual percentage yield assumes the consumer immediately reinvests interest payments at the account's interest rate.

* * * * *

(e) *Exemption for certain advertisements*—(1) *Certain media.* If an advertisement is made through one of the following media, it need not contain the information in paragraphs (c)(1), (c)(2), (c)(4), (c)(5), (c)(6)(ii), (c)(7), (d)(4), and (d)(5) of this section:

* * * * *

7. In Part 230, Appendix A would be amended under one of the two following alternatives:

a. Under the first alternative, Appendix A would be amended to read as follows:

i. The introductory text would be revised;

ii. The introductory text to Part I would be revised;

iii. In Part I, A. General Rules the text preceding *Examples* would be revised;

iv. In Part I, A. General Rules, under *Examples*, new paragraphs (3) and (4) would be added; and

v. In Part I, A. section E would be removed.

b. Under the second alternative, Appendix A would be amended as follows:

i. The introductory text to Appendix A would be revised;

ii. The introductory text to Part I would be removed;

iii. In Part I, A. General Rules would be revised;

iv. In Part I, B. Stepped Rate Accounts (Different Rates Apply in Succeeding Periods), the *Examples* would be revised;

v. In Part I, C. Variable-Rate Accounts would be revised; and

vi. In Part I, section E would be removed.

The revisions and additions under the first alternative would read as follows:

Appendix A to Part 230—Annual Percentage Yield Calculation

The annual percentage yield measures the total amount of interest earned or imputed on an account based on the interest rate and the frequency of compounding or interest distributions.[1] The annual percentage yield is expressed as an annualized rate, based on a 365-day year.[2] Part I of this appendix discusses the annual percentage yield calculations for account disclosures and advertisements, while Part II discusses annual percentage yield earned calculations for periodic statements.

Part I. Annual Percentage Yield for Account Disclosures and Advertising Purposes

In general, the annual percentage yield for account disclosures under §§ 230.4 and 230.5 and for advertising under § 230.8 is an annualized rate that reflects the relationship between the amount of interest that would be earned by the consumer for the term of the account (taking into account the frequency of interest distributions or compounding) and the amount of principal used to calculate that interest. Special rules apply to accounts with tiered and stepped interest rates.

A. General Rules

1. The annual percentage yield shall be calculated by the formula shown in paragraph 2 of Part I.A. of this appendix. Institutions shall calculate the annual percentage yield based on the actual number of days in the term of the account. For accounts without a stated maturity date (such as a typical savings or transaction account), the calculation shall be based on an assumed term of 365 days. In determining the total interest figure to be used in the formula, institutions shall assume that no withdrawals or deposits of principal occur during the term. For time accounts that are offered in multiples of months, institutions may base the number of days on either the actual number of days during the applicable period, or the number of days that would occur for any actual sequence of that many calendar months. If institutions choose to use the latter rule, they must use the same number of days to calculate the dollar amount of interest earned on the account that is used in the annual percentage yield formula (where ''Interest'' is divided by ''Principal'').

2. The annual percentage yield is calculated by use of the following general formula (''APY'' is used for convenience in the formulas):

$$APY+100[(1+(Interest/principal))^{(365/Days\ in\ term)}-1]$$

a. ''Principal'' is the amount of funds assumed to have been deposited at the beginning of the account.

b. ''Interest'' is the total dollar amount of interest earned on the Principal for the term of the account in which interest remains in the account. If interest is distributed by check or transfer at the same frequency or more frequently than interest is compounded, ''Interest'' is imputed to be the amount that would result if it were compounded at the same frequency interest is distributed. If interest is distributed by check or transfer and that interest is based in part on compounding, ''Interest'' is imputed to be the amount that would result if the distributed interest based on that compounding frequency had remained in the account.

c. ''Days in term'' is the actual number of days in the term of the account. When the ''days in term'' is 365 (that is, when the stated maturity is 365 days or when the account does not have a stated maturity), the annual percentage yield can be calculated by use of the following simple formula:

[1] The annual percentage yield reflects only interest and does not include the value of any bonus (or other consideration worth $10 or less) that may be provided to the consumer to open, maintain, increase or renew an account. Interest or other earnings are not to be included in the annual percentage yield if such amounts are determined by circumstances that may or may not occur in the future.

[2] Institutions may calculate the annual percentage yield based on a 365-day or a 366-day year in a leap year.

APY=100 (Interest/Principal)

Examples

* * * * *

(3) If an institution offers a $1,000 two-year certificate of deposit that distributes interest semi-annually by check or transfer, and there is annual compounding at a 6.00% interest rate, using the general formula above, the annual percentage yield is 6.09% for an account with semi-annual checks, and 6.00% for an account where interest is left in the account for compounding.

$APY=100[(1+(125.51/1,000))^{(365/730)}-1]$
APY=6.09%
$APY=100[(1+(123.60/1,000))^{(365/730)}-1]$
APY=6.00%

(4) If an institution offers a $1,000 two-year certificate of deposit that compounds daily and distributes monthly interest checks at a 6.00% interest rate, using the general formula above, the annual percentage yield is 6.18%, for consumers who leave interest in the account and for those who receive monthly checks:

$APY=100[(1+(127.49/1,000))^{(365/730)}-1]$
APY=6.18%

* * * * *

The revisions and additions under the first alternative would read as follows:

Appendix A to Part 230—Annual Percentage Yield Calculation

The annual percentage yield measures the total amount of interest earned or imputed on an account based on the interest rate and the frequency of compounding or interest distributions.[1] The annual percentage yield is expressed as an annualized rate, based on a 365-day year.[2] Part I of this appendix discusses the annual percentage yield calculations for account disclosures and advertisements, while Part II discusses annual percentage yield earned calculations for periodic statements.

Part I. Annual Percentage Yield for Account Disclosures and Advertising Purposes

A. General Rules

1. *General.* In general, the annual percentage yield for account disclosures under §§ 230.4 and 230.5 and for advertising under § 230.8 is an annualized rate that reflects the relationship between the amount of interest that would be earned by the consumer for the term of the account (taking into account the frequency of interest distributions or compounding) and the amount of principal used to calculate that interest. Special rules apply to accounts with tiered and stepped interest rates. The annual percentage yield shall be calculated by the formula shown in paragraph 2. of Part I.A. of this appendix. Institutions shall calculate the annual percentage yield based on the actual number of days in the term of the account. For accounts without a stated maturity date (such as a typical savings or transaction account), the calculation shall be based on an assumed term of 365 days. In determining the total interest figure to be used in the formula, institutions shall assume that no withdrawals or deposits of principal occur during the term. For time accounts that are offered in multiples of months, institutions may base the number of days on either the actual number of days during the applicable period, or the number of days that would occur for any actual sequence of that many calendar months. If institutions choose to use the latter rule, they must use the same number of days to calculate the dollar amount of interest earned on the account that is used in the annual percentage yield formulas. If interest is paid to the account or to the consumer from the account by check or transfer monthly, quarterly or semi-annually, institutions may base the number of days on either the actual number of days for those intervals, or the following assumed intervals: monthly, 30 days; quarterly, 91 days; and semi-annually, 182 days. If institutions choose to use the latter rule, they must use the same number of days to calculate the dollar amount of interest earned on the account that is used to determine when interest was paid to the account or to the consumer from the account. Institutions may base the dollar amount of a deposit on either the actual amount of the deposit or an assumed deposit of $1,000.

2. *Formula for all accounts.* The following formula may be used for all accounts. It shall be used for all accounts where interest is paid prior to the maturity of the account. This formula reflects the specific frequency of interest payments to the consumer.

$$\text{Deposit}=\text{First payment}/(1+\text{APY}/100)^{\text{Day of deposit to day of first payment}/365}$$
$$+\text{Succeeding payment}/(1+\text{APY}/100)^{\text{Day of deposit to succeeding payment}/365}$$
$$+\ldots$$
$$+\text{Final Payment}/(1+\text{APY}/100)^{\text{Day of deposit to day of final payment}/365}$$

a. ''APY'' is the annual percentage yield paid on the deposit.

b. ''Deposit'' is the initial deposit.

c. ''First payment'' is the amount of the first interest payment made during the term of the account.

d. ''Succeeding payment'' is the amount of each succeeding interest payment, excluding the first and final payments, made during the term of the account.

e. ''Final payment'' is the amount of the final payment including principal made at the end of the account.

f. ''Day of deposit to day of first payment'' is the number of days between the day of the initial deposit and the first payment.

g. ''Day of deposit to succeeding payment'' is the number of days between the day of the initial deposit and each succeeding payment.

h. ''Day of deposit to day of final payment'' is the actual number of days in the term of the account.

Examples

(1) For a $1,000 two-year CD (with a 6.00% interest rate and a .01644% daily periodic rate, and no compounding but semi-annual interest payments), an institution makes two midyear interest payments of $29.92 on day 182 of each year (days 182 and 547) and two interest payments of $30.08 at each year's end (days 365 and 730). Using the formula in paragraph 2. of Part I.A. of this appendix, the annual percentage yield is 6.09%:

$$1{,}000=29.92/(1+\text{APY}/100)^{182/365}+30.08/(1+\text{APY}/100)^{365/365}+29.92/(1+\text{APY}/100)^{547/365}+1030.08/(1+\text{APY}/100)^{730/365}$$

Daily yield=.01619%
APY=6.09%

(2) For a $1,000 one-year CD (with a 6.00% interest rate and a .01644% daily periodic rate, compounded semi-annually), an institution which allows the consumer to elect quarterly interest payments assumes three quarterly interest payments of $14.96 at 91-day intervals (days 91, 182 and 273), and a final payment of $1015.12 on day 365. Using the formula in paragraph 2. of Part I.A. of this appendix, the annual percentage yield for the quarterly payment option is 6.14%:

$$1{,}000=14.96/(1+\text{APY}/100)^{91/365}+14.96/(1+\text{APY}/100)^{182/365}+14.96/(1+\text{APY}/100)^{273/365}+1015.12/(1+\text{APY}/100)^{365/365}$$

Daily yield=.01632%
APY=6.14%

3. *Formula for certain accounts.* The formula under this paragraph may be

[1] The annual percentage yield reflects only interest and does not include the value of any bonus (or other consideration worth $10 or less) that may be provided to the consumer to open, maintain, increase or renew an account. Interest or other earnings are not to be included in the annual percentage yield if such amounts are determined by circumstances that may or may not occur in the future.

[2] Institutions may calculate the annual percentage yield based on a 365-day or a 366-day year in a leap year.

used for accounts that make a single interest payment at maturity. When using the formula, institutions shall determine the total interest figure to be used in the formula by assuming that all principal and interest remain on deposit for the entire term and that no other transactions (deposits *or* withdrawals) occur during the term. The annual percentage yield is calculated by use of the following formula (''APY'' is used for convenience in the formulas):

$$APY=100\ [(1+(Interest/Principal))^{(365/Days\ in\ term)}-1]$$

a. ''Principal'' is the amount of funds assumed to have been deposited at the beginning of the account.

b. ''Interest'' is the total dollar amount of interest earned on the Principal for the term of the account.

c. ''Days in term'' is the actual number of days in the term of the account. When the ''days in term'' is 365 (that is, where the stated maturity is 365 days or where the account does not have a stated maturity), the annual percentage yield may be calculated by use of the following simple formula:

$$APY=100\ (Interest/Principal)$$

Examples

(1) If an institution pays $61.83 in interest in a single payment at maturity for a 365-day year on $1,000 deposited into a one-year CD (with a 6.00% interest rate and daily compounding), using the formula shown in paragraph 3. of Part I.A. of this appendix, the annual percentage yield is 6.18%:

$$APY=100\ [(1+(61.83/1,000))^{(365/365)}-1]$$

$$APY=6.18\%.$$

(2) If an institution offers a $1,000 six-month certificate of deposit (where the six-month period used by the institution contains 182 days, interest is paid at maturity, and there is daily compounding at a 6.00% interest rate), using the formula shown in paragraph 3. of Part I.A. of this appendix, the annual percentage yield is 6.18%:

$$APY=100\ [(1+(30.37/1,000))^{(365/182)}-1]$$

$$APY=6.18\%$$

B. Stepped-Rate Accounts (Different Rates Apply in Succeeding Periods)

* * * * *

Examples

(1) If an institution offers a $1,000 6-month certificate of deposit on which it pays a 5.00% interest rate, compounded daily, for the first three months (which contain 91 days), and a 5.50% interest rate, compounded daily, for the next three months (which contain 92 days), the total interest paid in a single payment at maturity for six months is $26.68, and using the formula in paragraph 3. of Part I.A. of this appendix, the annual percentage yield is 5.39%:

$$APY=100\ [(1+(26.68/1,000))^{(365/183)}-1]$$

$$APY=5.39\%$$

(2) If an institution offers a $1,000 two-year certificate of deposit on which it pays a 6.00% interest rate, compounded daily, for the first year, and a 6.50% interest rate, compounded daily, for the next year, the total interest paid in a single payment at maturity is $133.13 and, using the formula in paragraph 3. of Part I.A. of this appendix, the annual percentage yield is 6.45%:

$$APY=100\ [(1+133.13/1,000)^{(365/730)}-1]$$

$$APY=6.45\%$$

(3) For a $1,000 two-year certificate of deposit (with an interest rate of 6.00% and a daily periodic rate of .01644% the first year, and an interest rate of 6.50% and a daily periodic rate of .01781% the second year, no compounding but semi-annual interest payments), an institution makes two payments during the first year, a midyear interest payment of $29.92 on day 182 and a year-end interest payment of $30.08 on day 365, and two payments during the second year, a midyear interest payment of $32.41 on day 547 and a final payment of $1032.59 on day 730. Using the formula in paragraph 3. of Part I.A. of this appendix, the annual percentage yield is 6.34%:

$$1,000=29.92/(1+APY/100)^{182/365}+30.08/(1+APY/100)^{365/365}+32.41/(1+APY/100)^{547/365}+1032.59/(1+APY/100)^{730/365}$$

Daily yield=.01684%

$$APY=6.34\%$$

C. Variable-Rate Accounts

1. For variable-rate accounts without an introductory premium or discounted rate, an institution must base the calculation only on the initial interest rate in effect when the account is opened (or advertised), and assume that this rate will not change during the year.

2. Variable-rate accounts with an introductory premium (or discount) rate must be calculated like a stepped-rate account. Thus, an institution shall assume that: (i) The introductory interest rate is in effect for the length of time provided for in the deposit contract; and (ii) the variable interest rate that would have been in effect when the account is opened or advertised (but for the introductory rate) is in effect for the remainder of the year. If the variable rate is tied to an index, the index-based rate in effect at the time of disclosure must be used for the remainder of the year. If the rate is not tied to an index, the rate in effect for existing consumers holding the same account (who are not receiving the introductory interest rate) must be used for the remainder of the year.

3. For example, assume an institution offers an account on which it pays quarterly interest payments at an introductory 7.00% interest rate and a .01934% daily periodic rate, compounded daily, for the first three months (which, for example, contain 91 days), while the variable interest rate that would have been in effect when the account was opened was 5.00% with a daily periodic rate of .01378%. For a 365-day year on a $1,000 deposit an institution would make one quarterly interest payment on day 91 of $17.60 (based on 91 days at 7.00%), followed by two interest payments of $12.54 on days 182 and 273, and a final payment of $1012.68 on day 365 (based on 274 days at 5.00%). Using the formula in paragraph 2. of Part I. A. of this appendix, the annual percentage yield is 5.66%:

$$1,000=17.60/(1+APY/100)^{91/365}+12.54/(1+APY/100)^{182/365}+12.54/(1+APY/100)^{273/365}+1012.68/(1+APY/100)^{365/365}$$

Daily yield=.01508%

$$APY=5.66\%$$

* * * * *

8. In Part 230, Appendix B would be amended as follows:

a. Under B–1—Model Clauses For Account Disclosures:

i. A new paragraph (a)(v) would be added following the text under *Tiering Method B;*

ii. Paragraph (b)(i) would be revised;

iii. Paragraphs (h)(iii) and (h)(v) would be removed; and

iv. Paragraph (h)(iv) would be redesignated as paragraph (h)(iii),

b. The last two sentences in the first paragraph of B–7—Sample Form would be removed; and

c. A new B–10—Sample Form would be added.

The additions and revisions would read as follows:

Appendix B to Part 230—Model Clauses and Sample Forms

* * * * *

B–1—Model Clauses For Account Disclosures

(a) * * *

(v) Effect of interest payments

Your annual percentage yield is based on _____(time period) payments/checks, and assumes you immediately reinvest interest payments at the account interest rate.

* * * * *

(b) Compounding and crediting

(i) Frequency

Interest will be compounded [on a _____ basis/every _____(time period)].

Interest will be credited to your account [on a _____ basis/every _____(time period)].

Interest for your account will be paid [by check/to another account] [(time period)].

* * * * *

BILLING CODE 6210–01–P

B-10 -- SAMPLE FORM (CERTIFICATE OF DEPOSIT)

XYZ SAVINGS BANK
1 YEAR CERTIFICATE OF DEPOSIT

Rate information

The interest rate for your account is 5.00 % with an annual percentage yield of 5.12 %. You will be paid this rate until the maturity date of the certificate. Your certificate will mature on September 30, 1994 .

Interest for your account will be:

Compounded and credited to your account ___ two times a year.
___ four times a year.

Paid ✓ monthly ✓ to you by check ___ to another
___ four times a year account.

Interest begins to accrue on the business day you deposit any noncash item (for example, checks).

Minimum balance requirements

You must deposit $1,000 to open this account.

You must maintain a minimum balance of $1,000 in your account every day to obtain the annual percentage yield listed above.

Balance computation method

We use the daily balance method to calculate the interest on your account. This method applies a daily periodic rate to the principal in the account each day.

Transaction limitations

After the account is opened, you may not make deposits into or withdrawals from the account until the maturity date.

Early withdrawal penalty

If you withdraw any principal before the maturity date, a penalty equal to three months' interest will be charged to your account.

Renewal policy

This account will be automatically renewed at maturity. You have a grace period of ten (10) calendar days after the maturity date to withdraw the funds without being charged a penalty.

BILLING CODE 6210–01–C

By order of the Board of Governors of the Federal Reserve System, January 18, 1995.

William W. Wiles,

Secretary of the Board.

[FR Doc. 95–1786 Filed 1–25–95; 8:45 am]

BILLING CODE 6210–01–P

DEPARTMENT OF HEALTH AND HUMAN SERVICES

Food and Drug Administration

21 CFR Chapter I

[Docket No. 95D–0014]

Draft Proposed Regulations on Quality Standards and Certification Requirements for Mammography Facilities; Availability

AGENCY: Food and Drug Administration, HHS.

ACTION: Notice of availability of draft proposed regulations.

SUMMARY: The Food and Drug Administration (FDA) is announcing the availability of draft proposed regulations prepared by the Center for Devices and Radiological Health (CDRH) to implement the Mammography Quality Standards Act of 1992 (MQSA). The drafts contain minimum quality standards for mammography facilities in the following areas: Personnel standards, medical outcomes audits, medical records and mammography reports, quality assurance, mobile mammography, accreditation bodies, implant imaging, mammography equipment, variances, consumer complaint mechanism, and quality control.

DATES: Written comments by April 11, 1995.

ADDRESSES: Submit written requests for single copies of the draft regulations to the Center for Devices and Radiological Health (HFZ–240), Food and Drug Administration, 9200 Corporate Blvd., Rockville, MD 20850. Send two self-addressed adhesive labels to assist that office in processing your requests. Submit written comments on the draft proposed regulations to the Dockets Management Branch (HFA–305), Food and Drug Administration, rm. 1–23, 12420 Parklawn Dr., Rockville, MD 20857. Requests and comments should be identified with the docket number found in brackets in the heading of this document. A copy of the draft proposed regulations and received comments are available for public examination in the Dockets Management Branch (address above) between 9 a.m. and 4 p.m., Monday through Friday.

FOR FURTHER INFORMATION CONTACT: Charles K. Showalter, Center for Devices and Radiological Health, Center for Devices and Radiological Health (HFZ–240), 9200 Corporate Blvd., Rockville, MD 20850, 301–594–3311.

SUPPLEMENTARY INFORMATION: FDA is announcing the availability of draft proposed regulations regarding quality standards and certification requirements for mammography facilities in the following areas: Personnel standards, medical outcomes audits, medical records and mammography reports, quality assurance, mobile mammography, accreditation bodies, implant imaging, mammography equipment, variances, consumer complaint mechanism, and quality control. These proposed regulations are being developed to implement the MQSA (Pub. L. 102–539), which was enacted to establish quality standards for mammography. The MQSA requires that, to provide mammography services legally after October 1, 1994, all facilities, except facilities of the Department of Veterans Affairs, must be both accredited by an approved accrediting body and certified by the Secretary of Health and Human Services (the Secretary). The authority to approve accrediting bodies and to certify facilities has been delegated by the Secretary to FDA.

Pursuant to authorization from Congress, FDA promulgated interim regulations to ensure that mammography facilities meet minimum quality standards. These regulations, which were published in the **Federal Register** on December 21, 1993 (58 FR 67558 and 58 FR 67565), and amended on September 30, 1994 (59 FR 49808), became effective on October 1, 1994, and will remain in effect until final regulations are promulgated.

FDA is currently developing proposed regulations for quality standards in various subject areas, including the 11 areas referenced above. Under the MQSA, FDA established a National Mammography Quality Assurance Advisory Committee (NMQAAC) to advise the agency on the appropriate level of quality standards for mammography facilities and accrediting bodies. Advanced drafts of proposed regulations are provided routinely to all members of the advisory committee for their advice and recommendation, and periodic public meetings of the advisory committee are being held.

An advisory committee meeting was held on January 23 through January 25, 1995. The meeting was announced in the **Federal Register** of December 21, 1994 (59 FR 65776). It was held at the Dupont Plaza Hotel, Embassy Room, 1500 New Hampshire Ave. NW., Washington, D.C.

In order to gather additional information on these particular topics, FDA decided to share the drafts of these proposed regulations with certain individuals who were invited as guests to the January 23 through 25, 1995, advisory committee meeting to enable them to provide comments at the meeting on the feasibility of efficient implementation of these draft proposed standards by the radiology community. These invited guests have particular expertise in one or more of the areas addressed by the draft proposals. The agency is publishing this notice in order to make the same draft documents available to the general public.

Although all members of the general public will have an opportunity to comment on the proposed regulations when they are published in the spring of 1995, interested persons who wish to comment on the draft proposals may submit written comments to the Dockets Management Branch (address above) on or before April 11, 1995. Two copies of any comments should be submitted, except that individuals may submit one copy. Comments are to be identified with the docket number found in brackets in the heading of this document. The draft proposed regulations and comments received may be seen in the Dockets Management Branch between 9 a.m. and 4 p.m., Monday through Friday.

FDA will consider any comments received in developing final regulations.

Dated: January 23, 1995.

William K. Hubbard,

Interim Deputy Commissioner for Policy.

[FR Doc. 95–2006 Filed 1–23–95; 3:40 pm]

BILLING CODE 4160–01–F

DEPARTMENT OF JUSTICE

Office of Justice Programs

28 CFR Part 93

[OJP No. 1014]

RIN 1121–AA26

Drug Courts

AGENCY: Department of Justice, Office of Justice Programs.

ACTION: Proposed rule.

SUMMARY: This notice announces a proposed rule and requests comments on the Drug Court Program as authorized by Title V of the Violent Crime Control and Law Enforcement Act of 1994. This rule gives general

guidance regarding the program and specifically delineates the prohibition on participation by violent offenders. Detailed program guidelines and application materials for the Fiscal year 1995 Drug Court Program will be available in early 1995.

DATES: All comments must be received by February 27, 1995.

ADDRESSES: All comments should be addressed to Reginald L. Robinson, Deputy Assistant Attorney General, Office of Justice Program, 633 Indiana Avenue NW., Washington, DC 20531.

FOR FURTHER INFORMATION CONTACT: The Department of Justice Response Center at 1–800–421–6770 or (202) 307–1480.

SUPPLEMENTARY INFORMATION:

Overview of Title V-Drug Courts

Federal discretionary grants are being made available under the Violent Crime Control and Law Enforcement Act of 1994, Title V, Public Law 103–322, 108 Stat. 1796 (September 13, 1994), 42 U.S.C. 3796ii-3796ii-8 [hereinafter the ''Act''] to states, units of local government, Indian tribal governments, and state and local courts for assistance with drug court programs. The Act gives the Attorney General and, through statutory authority contained in the Omnibus Crime Control and Safe Streets Act, an authorized designee (in this case the Assistant Attorney General for the Office of Justice Programs), the authority to make grants to the above mentioned entities for drug court programs that involve continuing judicial supervision over non-violent offenders with substance abuse problems and the integrated administration of sanctions and services including: (1) mandatory periodic testing for the use of controlled substances or other addictive substances during any period of supervised release or probation for each participant; (2) substance abuse treatment for each participant; (3) diversion, probation, or other supervised release involving the possibility of prosecution, confinement, or incarceration based on noncompliance with program requirements or failure to show satisfactory progress; and (4) programmatic, offender management, and aftercare services such as relapse prevention, health care, education, vocational training, job placement, housing placement, and child care or other family support services for each participant requiring such services.

Section 50001 of Title V of the Act requires that regulations be issued to ensure exclusion of violent offenders from these funded programs. This proposed rule responds to that requirement. To more fully develop and define the grant program and to provide direction and guidance to potential applicants, program guidelines will be issued subsequent to the publication of this proposed rule. This Supplementary Information section is intended, in part, to elicit comment on a broad range of issues relevant to the development and implementation of those program guidelines.

Statement of the Problem

More than half of all individuals brought into the criminal justice system have substance abuse problems. Many of these individuals are non-violent offenders who repeatedly cycle through the court, corrections and probation systems without help to change their behavior. The underlying problem of such non-violent substance abusing offenders frustrates and inhibits judicial effectiveness. All too often, the non-violent drug offender faces little certainty of punishment and represents a long term recurring problem for both the criminal justice system and society.

In too many cases, the criminal justice system fails to subject non-violent, drug abusing offenders to intervention measures that provide the mix of services and sanctions necessary to change their behavior or, if necessary, coerce abstinence. Some courts and prosecutors, however, have cost-effectively addressed the problem through the use of treatment drug courts. Their results suggest that ''drug courts'' can significantly enhance the offender's opportunity to break the cycle of substance abuse and crime. Those who are coming into contact with the criminal justice system for the first time may be particularly susceptible to effective early intervention.

Indeed, research and evaluation demonstrate that the ''drug court'' approach is effective in reducing both drug abuse and drug-related crime. The Drug Court discretionary grant program of Title V seeks to support the development of innovative measures that provide courts additional resources to assure certainty of punishment for drug abusing offenders through the integrated administration of services and sanctions, including close supervision and coerced abstinence.

The Violent Crime Control and Law Enforcement Act of 1994

The Department of Justice (Department) recognizes that no single model exists for an effective drug court. To the contrary, the Department believes there may be a variety of valid approaches that deal effectively with non-violent offenders with substance abuse problems. Consequently, the Drug Court grant program will maintain flexibility in providing funds to support the development of a variety of initiatives that coordinate treatment and coerced abstinence.

The Department also recognizes the great diversity in the structure and operation of state and local courts and criminal justice systems. Hence, the Department is committed to a flexible approach that allows jurisdictions to tailor local initiatives to best suit their needs and local conditions. Program flexibility, however, is necessarily balanced by statutory requirements concerning the design and administration of the funded programs. Accordingly, Drug Court programs that receive grant awards must:

- Exclude violent offenders from program participation;
- Include a long-term strategy and detailed implementation plan;
- Explain the applicant's inability to fund the program adequately without federal assistance;
- Use federal support to supplement, and not supplant, State, Indian Tribal, and local sources of funding that would otherwise be available;
- Identify related governmental or community initiatives which complement or will be coordinated with the proposal;
- Consult with all affected agencies and insure that there will be appropriate coordination with all affected agencies in the implementation of the program;
- Certify that participating offenders will receive continuing judicial supervision by one or more designated judges with responsibility for the drug court program;
- Specify plans for obtaining necessary support and continuing the proposed program following the conclusion of Federal support; and
- Describe the methodology that will be used in evaluating the program.

Consistent with Congressional intent, program evaluation will be crucial. Grant recipients will be required to cooperate with a national evaluation team throughout their involvement with the program. Recipients will also be required to provide for independent evaluation of the impact and effectiveness of their funded programs. The following issues will be especially important in determining whether programs receiving grants under this initiative are effective: (1) Reduction in recidivism rates of program participants, (2) maintenance of acceptable substance abuse treatment completion rates among program participants, (3) decreased drug use by program participants, and (4) maintenance of a cost effective program

in relation to the overall criminal justice system.

FY 1995 Drug Court Initiative

The Fiscal Year 1995 Department of Justice Appropriations Act, Public Law 103–317, has allocated $29 million for the Drug Court grant programs. Eligibility of applicants to receive grants will be based on requirements of the statute and these regulations, as well as assurances and certifications specified in detailed program guidelines and application materials that will be available in early 1995 for the Fiscal Year 1995 Drug Court initiative.

While detailed program guidelines will follow the publication of this notice of proposed rulemaking, the Department has made some broad programmatic decisions upon which it welcomes comment. Three types of funding will be available under this program during Fiscal Year 1995. First, planning funding will be available for those jurisdictions that express interest in initiating a drug court, but have not engaged in the comprehensive planning necessary to make such a program successful. Second, jurisdictions currently operating drug court programs may seek funding to expand, enhance, or augment these ongoing efforts. Finally, for those jurisdictions that have engaged (or are currently engaged) in a comprehensive drug court planning process, funding may be available to implement the plans their efforts have produced.

Call for Comments Concerning the Drug Court Initiative

Substance abuse-related offender case management is primarily a state and local issue; thus, the Drug Court grant program contemplates collaboration between federal and state and local agencies. State and local government officials were involved in Congressional hearings and meetings that guided the development of this legislation and will continue to be involved as the Department moves forward in developing this regulation, establishing policy guidance, and implementing program guidelines. At this time, comments are welcome regarding the basic program design requirements described in § 93.4 of the proposed rule, and to the entire scope of the program.

Administrative Requirements

This regulation has been drafted and reviewed in accordance with Executive Order 12866, section 1(b), Principles of Regulation. This rule is not a ''significant regulatory action'' under Executive Order 12866, section 3(f), Regulatory Planning and Review, and, accordingly, this rule has not been reviewed by the Office of Management and Budget.

The Assistant Attorney General for the Office of Justice Programs, in accordance with the Regulatory Flexibility Act (5 U.S.C. 605(b)), has reviewed this regulation and, by approving it, certifies that this regulation will not have a significant economic impact on a substantial number of small entities.

List of Subjects

Grant Programs, Judicial Administration.

For the reasons set out in the preamble, Title 28, Chapter I, of the Code of Federal Regulations is proposed to be amended by adding a new Part 93 consisting of Subpart A as set forth below.

PART 93—PROVISIONS IMPLEMENTING THE VIOLENT CRIME CONTROL AND LAW ENFORCEMENT ACT OF 1994

Subpart A—Drug Courts

Sec.
93.1 Purpose.
93.2 Statutory authority.
93.3 Definitions.
93.4 Grant authority.
93.5 Exclusion of violent offenders.

Subpart B—[Reserved]

Authority: 42 U.S.C. 3796ii–3796ii–8.

Subpart A—Drug Courts

§ 93.1 Purpose.

This part sets forth requirements and procedures to ensure that grants to States, State courts, local courts, units of local government, and Indian tribal governments, acting directly or through agreements with other public or private entities, exclude violent offenders from participation in programs authorized and funded under this part.

§ 93.2 Statutory authority.

This program is authorized under the Violent Crime Control and Law Enforcement Act of 1994, Title V, Public Law 103–322, 108 Stat. 1796 (September 13, 1994), 42 U.S.C. 3796ii–3796ii–8.

§ 93.3 Definitions.

(a) *State* has the same meaning as set forth in section 901(a)(2) of the Omnibus Crime Control and Safe Streets Act of 1968, as amended.

(b) *Unit of Local Government* has the same meaning as set forth in section 901(a)(3) of the Omnibus Crime Control and Safe Streets Act of 1968, as amended.

(c) *Assistant Attorney General* means the Assistant Attorney General for the Office of Justice Programs.

(d) *Violent offender* means a person who either—

(1) Is currently charged with or convicted of an offense during the course of which:

(i) The person carried, possessed, or used a firearm or other dangerous weapon; or

(ii) There occurred the use of force against the person of another; or

(iii) There occurred the death of, or serious bodily injury to, any person;

without regard to whether proof of any of the elements described herein is required to convict; or

(2) Has previously been convicted of a felony crime of violence involving the use or attempted use of force against a person with the intent to cause death or serious bodily harm.

§ 93.4 Grant authority.

(a) The Assistant Attorney General may make grants to States, State courts, local courts, units of local government, and Indian tribal governments, acting directly or through agreements with other public or private entities, for programs that involve:

(1) Continuing judicial supervision over offenders with substance abuse problems who are not violent offenders, and

(2) The integrated administration of other sanctions and services, which shall include—

(i) Mandatory periodic testing for the use of controlled substances or other addictive substances during any period of supervised release or probation for each participant;

(ii) Substance abuse treatment for each participant;

(iii) Diversion, probation, or other supervised release involving the possibility of prosecution, confinement, or incarceration based on noncompliance with program requirements or failure to show satisfactory progress; and

(iv) Programmatic, offender management, and aftercare services such as relapse prevention, health care, education, vocational training, job placement, housing placement, and child care or other family support services for each participant who requires such services.

(b) Applications for grants under this program shall be made at such times and in such form as may be specified in guidelines or notices published by the Assistant Attorney General. Applications will be evaluated according to the statutory requirements of the Act and the programmatic goals

specified in the applicable guidelines. Grantees must comply with all statutory and program requirements applicable to grants under this program.

§ 93.5 Exclusion of violent offenders.

(a) The Assistant Attorney General will ensure that grants to States, State courts, local courts, units of local government, and Indian tribal governments, acting directly or through agreements with other public or private entities, exclude violent offenders from programs authorized and funded under this part.

(b) No recipient of a grant made under the authority of this part shall permit a violent offender to participate in any program receiving funding pursuant to this part.

(c) Applicants must certify as part of the application process that violent offenders will not participate in programs authorized and funded under this part. The required certification shall be in such form and contain such assurances as the Assistant Attorney General may require to carry out the requirements of this part.

(d) If the Assistant Attorney General determines that one or more violent offenders are participating in a program receiving funding under this part, such funding shall be promptly suspended, pending the termination of participation by those persons deemed ineligible to participate under these regulations.

(e) The Assistant Attorney General may carry out or make arrangements for evaluations and request information from programs that receive support under this part to ensure that violent offenders are excluded from participating in programs hereunder.

Subpart B—[Reserved]

Laurie Robinson,

Assistant Attorney General, Office of Justice Programs.

[FR Doc. 95–1903 Filed 1–25–95; 8:45 am]

BILLING CODE 4410–18–P

ENVIRONMENTAL PROTECTION AGENCY

40 CFR Part 52

[NC–64–2–6642b; FRL–5138–7]

Approval and Promulgation of Implementation Plans North Carolina: Approval of Revisions to the State Implementation Plan

AGENCY: Environmental Protection Agency (EPA).

ACTION: Proposed rule.

SUMMARY: The EPA proposes to approve the State Implementation Plan (SIP) revisions, submitted by the State of North Carolina, which extend the Reasonably Available Control Technology (RACT) regulations for emissions of Volatile Organic Compounds (VOC) to new and expanded nonattainment areas for ozone (O_3); amend several definitions; add compliance schedules for sources located in O_3 nonattainment areas; amend the alternative compliance and exemption from compliance schedule regulations; amend the graphic arts regulation; add new regulations for several types of VOC sources; and add an interim regulation for categories of sources for which RACT guidelines are being developed. In the final rules section of this **Federal Register**, the EPA is approving the State's SIP revision as a direct final rule without prior proposal because the EPA views this as a noncontroversial revision amendment and anticipates no adverse comments. A detailed rationale for the approval is set forth in the direct final rule. If no adverse comments are received in response to that direct final rule, no further activity is contemplated in relation to this proposed rule. If EPA receives adverse comments, the direct final rule will be withdrawn and all public comments received will be addressed in a subsequent final rule based on this proposed rule. The EPA will not institute a second comment period on this document. Any parties interested in commenting on this document should do so at this time.

DATES: To be considered, comments must be received by February 27, 1995.

ADDRESSES: Written comments on this action should be addressed to Mr. Randy Terry at the EPA Regional Office listed below.

Copies of the documents relative to this action are available for public inspection during normal business hours at the following locations. The interested persons wanting to examine these documents should make an appointment with the appropriate office at least 24 hours before the visiting day.

Air and Radiation Docket and Information Center (Air Docket 6102), U.S. Environmental Protection Agency, 443, 401 M Street, SW., Washington DC 20460.

Environmental Protection Agency, Region IV Air Programs Branch, 345 Courtland Street, NE., Atlanta, Georgia 30365.

North Carolina Department of Environmental, Health, and Natural Resources, Division of Environmental Management, Raleigh, North Carolina 27626–0535.

FOR FURTHER INFORMATION CONTACT: Mr. Randy Terry, Regulatory Planning and Development Section, Air Programs Branch, Air, Pesticides, and Toxics Management Division, Region IV Environmental Protection Agency, 345 Courtland Street, Atlanta, Georgia 30365. The telephone number is 404/347–3555, ext. 4212.

SUPPLEMENTARY INFORMATION: For additional information see the direct final rule which is published in the rules section of this **Federal Register**.

Dated: January 3, 1995.

Patrick M. Tobin,

Acting Regional Administrator.

[FR Doc. 95–1935 Filed 1–25–95; 8:45 am]

BILLING CODE 6560–50–F

---

40 CFR Part 180

[OPP–300377; FRL–4928–5]

RIN 2070–AB78

Urea-Formaldehyde Copolymer; Tolerance Exemption

AGENCY: Environmental Protection Agency (EPA).

ACTION: Proposed rule.

SUMMARY: This document proposes to expand the current exemption from the requirement of a tolerance for residues of urea-formaldehyde copolymer (CAS Reg. No. 9011-05-6), when used as an inert ingredient in pesticide formulations applied to growing crops only under 40 CFR 180.1001(d) to include uses as a solid diluent, filler and/or carrier and to modify the minimum molecular weight from 30,000 to 20,000. Ciba-Geigy Corp. requested this proposed regulation.

DATES: Written comments, identified by the document control number [OPP-300377], must be received on or before February 27, 1995.

ADDRESSES: By mail, submit written comments to Public Response and Program Resources Branch, Field Operations Division (7506C), Office of Pesticide Programs, Environmental Protection Agency, 401 M St., SW., Washington, DC 20460. In person, deliver comments to: Rm. 1132, CM #2, 1921 Jefferson Davis Hwy., Arlington, VA 22202.

Information submitted as a comment concerning this document may be claimed confidential by marking any part or all of that information as ''Confidential Business Information'' (CBI). Information so marked will not be disclosed except in accordance with procedures set forth in 40 CFR part 2. A copy of the comment that does not

contain CBI must be submitted for inclusion in the public record. Information not marked confidential will be included in the public docket by EPA without prior notice. All written comments will be available for public inspection in Rm. 1132 at the address given above, from 8 a.m. to 4 p.m., Monday through Friday, excluding legal holidays.

FOR FURTHER INFORMATION CONTACT: By mail: Connie Welch, Registration Support Branch, Registration Division (7505W), Environmental Protection Agency, 401 M St., SW., Washington, DC 20460. Office location and telephone number: 2800 Crystal Drive, North Tower, 6th Floor, Arlington, VA 22202, (703)-308-8470.

SUPPLEMENTARY INFORMATION: Ciba Geigy Corp., P.O. Box 18300, Greensboro, NC 27419-8300, submitted pesticide petition (PP) 4E04423 to EPA requesting that the Administrator, pursuant to section 408(e) of the Federal Food Drug, and Cosmetic Act (FFDCA) (21 U.S.C. 346 a(e)), propose to amend 40 CFR 180.1001(d) by revising the existing exemption from the requirement of a tolerance for residues of urea-formaldehyde copolymer (CAS Reg. No. 9011-056), when used as an inert ingredient (encapsulating agent) in pesticide formulations applied to growing crops only. The petitioner seeks to expand the use of urea-formaldehyde copolymer to include solid diluent, filler, and carrier and to revise the minimum number-average molecular weight from 30,000 to 20,000.

Inert ingredients are all ingredients that are not active ingredients as defined in 40 CFR 153.125, and include, but are not limited to, the following types of ingredients (except when they have a pesticidal efficacy of their own): solvents such as alcohols and hydrocarbons; surfactants such as polyoxyethylene polymers and fatty acids; carriers such as clay and diatomaceous earth; thickeners such as carrageenan and modified cellulose; wetting, spreading, and dispersing agents; propellants in aerosol dispensers; microencapsulating agents; and emulsifiers. The term ''inert'' is not to imply nontoxicity; the ingredient may or may not be chemically active.

The data submitted in the petition and other relevant material have been evaluated. As part of the EPA policy statement on inert ingredients published in the **Federal Register** of April 22, 1987 (52 FR 13305), the Agency set forth a list of studies which would generally be used to evaluate the risks posed by the presence of an inert ingredient in a pesticide formulation. However, where it can be determined without that data that the inert ingredient will present minimal or no risk, the Agency generally does not require some or all of the listed studies to rule on the proposed tolerance or exemption from the requirement of a tolerance for an inert ingredient. The Agency has decided that no data, in addition to that described below, for urea-formaldehyde copolymer will need to be submitted. The rationale for this decision is described below.

In the case of certain chemical substances that are defined as ''polymers,'' the Agency has established a set of criteria which identify categories of polymers that present low risk. These criteria (described in 40 CFR 723.250) identify polymers that are relatively unreactive and stable compared to other chemical substances as well as polymers that typically are not readily absorbed. These properties generally limit a polymer's ability to cause adverse effects. In addition, these criteria exclude polymers about which little is known. The Agency believes that polymers meeting the criteria noted above will present minimal or no risk. Urea-formaldehyde copolymer conforms to the definition of a polymer given in 40 CFR 723.250(b)(11) and meets the following criteria that are used to identify low-risk polymers.

1. The minimum number-average molecular weight of urea-formaldehyde copolymer is 20,000. Substances with molecular weights greater than 400 generally are not absorbed through the intact skin, and substances with molecular weights greater than 1,000 generally are not absorbed through the intact gastrointestinal tract. Chemicals not absorbed through skin or GI tract generally are incapable of eliciting a toxic response.

2. Urea-formaldehyde copolymer is not a cationic polymer, nor is it reasonably expected to become a cationic polymer in a natural aquatic environment.

3. Urea-formaldehyde copolymer does not contain less than 32.0 percent by weight of the atomic element carbon.

4. Urea-formaldehyde copolymer contains as an integral part of its coposition the atomic elements carbon, hydrogen, nitrogen, and oxygen.

5. Urea-formaldehyde copolymer does not contain as an integral part of its composition, except as impurities, any elements other than those listed in 40 CFR 723.250(d)(3)(ii).

6. Urea-formaldehyde copolymer is not a biopolymer, a synthetic equivalent of a biopolymer, or a dervative or modification of a biopolymer that is substantially intact.

7. Urea-formaldehyde copolymer is not manufactured from reactants containing, other than impurities, halogen atoms or cyano groups.

8. Urea-formaldehyde copolymer does not contain a reactive functional group that is intended or reasonably expected to undergo further reaction.

9. Urea-formaldehyde copolymer is neither designed nor reasonably expected to substantially degrade, decompose, or depolymerize.

Based on the information above and review of its use, EPA has found that, when used in accordance with good agricultural practice, this ingredient is useful and a tolerance is not necessary to protect the public health. Therefore, EPA proposes that the exemption from the requirement of a tolerance be established as set forth below.

Any person who has registered or submitted an application for registration of a pesticide, under the Federal Insecticide, Fungicide, and Rodenticide Act (FIFRA) as amended, that contains any of the ingredients listed herein, may request within 30 days after the publication of this document in the **Federal Register** that this rulemaking proposal be referred to an Advisory Committee in accordance with section 408(e) of the FFDCA.

Interested persons are invited to submit written comments on the proposed regulation. Comments must bear a notation indicating the document control number, [OPP-300377]. All written comments filed in response to this petition will be available in the Public Response and Program Resources Branch, at the address given above, from 8 a.m. to 4 p.m., Monday through Friday, except legal holidays.

The Office of Management and Budget has exempted this rule from the requirements of section 2 of Executive Order 12866.

Pursuant to the requirement of the Regulatory Flexibility Act (Pub. L. 96-354, 94 Stat. 1164, 5 U.S.C. 601-612), the Administrator has determined that regulations establishing new tolerances or raising tolerance levels or establishing exemptions from tolerance requirements do not have an economic impact on a substantial number of small entities. A certification statement to this effect was published in the **Federal Register** of May 4, 1981 (46 FR 24950).

List of Subject in 40 CFR Part 180

Environmental protection, Administrative practice and procedure, Agricultural commodities, Pesticides and pests, Reporting and recordkeeping requirements.

Dated: January 13, 1995.

Stephen L. Johnson

Director, Registration Division, Office of Pesticide Programs.

Therefore, it is proposed that 40 CFR part 180 be amended as follows:

Part 180—[AMENDED]

1. The authority citation for part 180 continues to read as follows:

Authority: 21 U.S.C. 346a and 371.

2. Section 180.1001(d) is amended in the table therein by revising the inert ingredient ''Urea-formaldehyde copolymer'', to read as follows:

§ 180.1001 Exemptions from the requirement of a tolerance.

* * * * *

(d) * * *

Inert ingredient	Limits	Uses
* * * * * * *		
Urea-formaldehyde copolymer (CAS Reg. No. 9011-05-6); minimum number average molecular weight 20,000.	.....	Encapsulating agent, solid diluent, filler, carrier.
* * * * * * *		

* * * * *

[FR Doc. 95–1853 Filed 1–25–95; 8:45 am]

BILLING CODE 6560–50–F

FEDERAL COMMUNICATIONS COMMISSION

47 CFR Part 73

[MM Docket No. 95–7, RM–8561]

Radio Broadcasting Services; Coleman, Sebewaing & Tuscola, Michigan

AGENCY: Federal Communications Commission.

ACTION: Proposed rule.

SUMMARY: This document requests comments on a petition filed by Faircom Flint, Inc., proposing the substitution of Channel 268A for Channel 269A, at Tuscola, Michigan, at coordinates 43–16–02 and 83–45–34, and modification of the license for Station WBBN accordingly. To accommodate the substitution at Tuscola, petitioner also requested the substitution of Channel 269A for Channel 268A at Coleman, Michigan, at coordinates 43–48–41 and 84–27–57 and modification of the license for Station WPRJ and the substitution of Channel 281A for vacant Channel 267A at Sebewaing, Michigan, at coordinates 43–39–30 and 83–31–00. Canadian concurrence will be requested for the new allotments at Tuscola, Coleman and Sebewaing. We shall also propose to delete the channel at Sebewaing if no expressions of interest are filed during the comment cycle in this proceeding. If comments are filed expressing interest in a channel in Sebewaing, Channel 281A will be allotted to the community and a window for filing applications will be opened upon termination of this proceeding.

DATES: Comments must be filed on or before March 16, 1995, and reply comments on or before March 31, 1995.

ADDRESSES: Federal Communications Commission, Washington, D.C. 20554. In addition to filing comments with the FCC, interested parties should serve the petitioner's counsel, as follows: Richard M. Riehl, Haley, Bader & Potts, 4350 North Fairfax Drive, Suite 900, Arlngton, Virginia 22203–1633.

FOR FURTHER INFORMATION CONTACT: Kathleen Scheuerle, Mass Media Bureau, (202) 634–6530.

SUPPLEMENTARY INFORMATION: This is a summary of the Commission's *Notice of Proposed Rule Making,* MM Docket No. 95–7, adopted January 12, 1995, and released January 23, 1995. The full text of this Commission decision is available for inspection and copying during normal business hours in the Commission's Reference Center (Room 239), 1919 M Street, NW, Washington, D.C. The complete text of this decision may also be purchased from the Commission's copy contractors, International Transcription Services, Inc., 2100 M Street, NW, Suite 140, Washington, D.C. 20037, (202) 857–3800.

Provisions of the Regulatory Flexibility Act of l980 do not apply to this proceeding.

Members of the public should note that from the time a Notice of Proposed Rule Making is issued until the matter is no longer subject to Commission consideration or court review, all *ex parte* contacts are prohibited in Commission proceedings, such as this one, which involve channel allotments. See 47 CFR 1.1204(b) for rules governing permissible *ex parte* contact.

For information regarding proper filing procedures for comments, see 47 CFR 1.415 and 1.420.

List of Subjects in 47 CFR Part 73

Radio broadcasting.

Federal Communications Commission.

John A. Karousos,

Chief, Allocations Branch, Policy and Rules Division, Mass Media Bureau.

[FR Doc. 95–1950 Filed 1–25–95; 8:45 am]

BILLING CODE 6712–01–F

47 CFR Part 73

[MM Docket No. 95–4; RM–8501]

Radio Broadcasting Services; Charlotte Amalie, Virgin Islands

AGENCY: Federal Communications Commission.

ACTION: Proposed rule.

SUMMARY: The Commission requests comments on a petition filed by Virgin Islands Public Television System, proposing the allotment of Channel 226A at Charlotte Amalie, Virgin Islands, and its reservation for noncommercial educational use. Channel 226A can be allotted to Charlotte Amalie in compliance with the Commission's minimum distance separation requirements without the imposition of a site restriction at petitioner's requested site. The coordinates for Channel 226A at Charlotte Amalie are North Latitude 18–21–26 and West Longitude 64–56–50.

DATES: Comments must be filed on or before March 16, 1995, and reply comments on or before March 31, 1995.

ADDRESSES: Federal Communications Commission, Washington, D.C. 20554. In addition to filing comments with the FCC, interested parties should serve the petitioner, or its counsel or consultant,

as follows: Lawrence M. Miller, Esq., Schwartz, Woods & Miller, Suite 300, The Dupont Circle Bldg., 1350 Connecticut Ave., NW, Washington, D.C. 20036–1702 (Counsel for Petitioner).

FURTHER INFORMATION CONTACT: Sharon P. McDonald, Mass Media Bureau, (202) 634–6530.

SUPPLEMENTARY INFORMATION: This is a synopsis of the Commission's *Notice of Proposed Rule Making,* MM Docket No. 95–4, adopted January 6, 1995, and released January 23, 1995. The full text of this Commission decision is available for inspection and copying during normal business hours in the FCC Reference Center (Room 239), 1919 M Street, NW, Washington, D.C. The complete text of this decision may also be purchased from the Commission's copy contractor, International Transcription Service, Inc., (202) 857–3800, 2100 M Street, NW, Suite 140, Washington, D.C. 20037.

Provisions of the Regulatory Flexibility Act of 1980 do not apply to this proceeding.

Members of the public should note that from the time a Notice of Proposed Rule Making is issued until the matter is no longer subject to Commission consideration or court review, all *ex parte* contacts are prohibited in Commission proceedings, such as this one, which involve channel allotments. See 47 CFR 1.1204(b) for rules governing permissible *ex parte* contacts.

For information regarding proper filing procedures for comments, see 47 CFR 1.415 and 1.420.

List of Subjects in 47 CFR Part 73

Radio broadcasting.

FEDERAL COMMUNICATIONS COMMISSION.

John A. Karousos,

Chief, Allocations Branch, Policy and Rules Division, Mass Media Bureau.

[FR Doc. 95–1949 Filed 1–25–95; 8:45 am]

BILLING CODE 6712–01–F

---

47 CFR Part 73

[MM Docket No. 94–119; RM–8104]

Radio Broadcasting Services; Hermitage, MO

AGENCY: Federal Communications Commission.

ACTION: Proposed rule.

SUMMARY: This document dismissed a petition for rule making filed by KYOO Broadcasting Company requesting the allotment of Channel 226A to Hermitage, Missouri, as that community's first local service. *See* 59 FR 51539, October 12, 1994. Petitioner withdrew its petition for rule making and no other party expressed an interest in applying for a channel in Hermitage. Therefore, in keeping with Commission policy to refrain from allotting channels absent an expression of interest, the proposal for Hermitage is being dismissed. With this action, this proceeding is terminated.

FOR FURTHER INFORMATION CONTACT: Kathleen Scheuerle, Mass Media Bureau, (202) 634–6530.

SUPPLEMENTARY INFORMATION: This is a summary of the Commission's *Report and Order,* MM Docket No. 94–119, adopted January 11, 1995, and released January 20, 1995. The full text of this Commission decision is available for inspection and copying during normal business hours in the Commission's Reference Center (Room 239), 1919 M Street, NW, Washington, D.C. The complete text of this decision may also be purchased from the Commission's copy contractors, International Transcription Services, Inc., 2100 M Street, NW, Suite 140, Washington, D.C. 20037, (202) 857–3800.

List of Subjects in 47 CFR Part 73

Radio broadcasting.

1. The authority citation for Part 73 continues to read as follows:

Authority: 47 U.S.C. 154, 303.

Federal Communications Commission.

John A. Karousos,

Chief, Allocations Branch, Policy and Rules Division, Mass Media Bureau.

[FR Doc. 95–1954 Filed 1–25–95; 8:45 AM]

BILLING CODE 6712–01–F

---

47 CFR Part 73

[MM Docket No. 95–10, RM–8572]

Radio Broadcasting Services; Sun Valley, NV

AGENCY: Federal Communications Commission.

ACTION: Proposed rule.

SUMMARY: The Commission requests comments on a petition filed by James D. Sleeman seeking the allotment of Channel 229A to Sun Valley, NV, as the community's first local FM service. Channel 229A can be allotted to Sun Valley in compliance with the Commission's minimum distance separation requirements without the imposition of a site restriction, at coordinates 39–35–47 North Latitude and 119–46–30 West Longitude.

DATES: Comments must be filed on or before March 16, 1995, and reply comments on or before March 31, 1995.

ADDRESSES: Federal Communications Commission, Washington, D.C. 20554. In addition to filing comments with the FCC, interested parties should serve the petitioner, or its counsel or consultant, as follows: James D. Sleeman, 125 Chester Avenue, Annapolis, MD 21403 (Petitioner).

FOR FURTHER INFORMATION CONTACT: Leslie K. Shapiro, Mass Media Bureau, (202) 418–2189.

SUPPLEMENTARY INFORMATION: This is a synopsis of the Commission's *Notice of Proposed Rule Making,* MM Docket No. 95–10, adopted January 11, 1995, and released January 23, 1995. The full text of this Commission decision is available for inspection and copying during normal business hours in the FCC Reference Center (Room 239), 1919 M Street, NW, Washington, D.C. The complete text of this decision may also be purchased from the Commission's copy contractor, International Transcription Services, Inc., (202) 857–3800, 2100 M Street, NW, Suite 140, Washington, D.C. 20037.

Provisions of the Regulatory Flexibility Act of 1980 do not apply to thisproceeding.

Members of the public should note that from the time a Notice of Proposed Rule Making is issued until the matter is no longer subject to Commission consideration or court review, all *ex parte* contacts are prohibited in Commission proceedings, such as this one, which involve channel allotments. See 47 CFR 1.1204(b) for rules governing permissible *ex parte* contacts.

For information regarding proper filing procedures for comments, see 47CFR 1.415 and 1.420.

List of Subjects in 47 CFR Part 73

Radio broadcasting.

Federal Communications Commission.

John A Karousos,

Chief, Allocations Branch, Policy and Rules Division, Mass Media Bureau.

[FR Doc. 95–1953 Filed 1–25–95; 8:45 am]

BILLING CODE 6712–01–F

---

47 CFR Part 73

[MM Docket No. 95–9, RM–8560]

Radio Broadcasting Services; Cambria, CA

AGENCY: Federal Communications Commission.

ACTION: Proposed rule.

SUMMARY: This document requests comments on a petition for rule making filed on behalf of James Kampschroer, requesting the allotment of Channel 278A to Cambria, California, as that community's second local FM service. Coordinates used for this proposal are North Latitude 35–33–54 and West Longitude 121–04–48.

DATES: Comments must be filed on or before March 16, 1995, and reply comments on or before March 31, 1995.

ADDRESSES: Secretary, Federal Communications Commission, Washington, D.C. 20554. In addition to filing comments with the FCC, interested parties should serve the petitioner's counsel, as follows: Margaret L. Tobey, Esq., Akin, Gump, Strauss, Hauer & Feld, 1333 New Hampshire Avenue, NW., Washington, D.C. 20036.

FOR FURTHER INFORMATION CONTACT: Nancy Joyner, Mass Media Bureau, (202) 634–6530.

SUPPLEMENTARY INFORMATION: This is a synopsis of the Commission's *Notice of Proposed Rule Making,* MM Docket No. 95–9, adopted January 11, 1995, and released January 23, 1995. The full text of this Commission decision is available for inspection and copying during normal business hours in the FCC's Reference Center (Room 239), 1919 M Street, NW, Washington, D.C. The complete text of this decision may also be purchased from the Commission's copy contractors, International Transcription Service, Inc., (202) 857–3800, 2100 M Street, NW, Suite 140, Washington, D.C. 20037.

Provisions of the Regulatory Flexibility Act of l980 do not apply to this proceeding.

Members of the public should note that from the time a Notice of Proposed Rule Making is issued until the matter is no longer subject to Commission consideration or court review, all *ex parte* contacts are prohibited in Commission proceedings, such as this one, which involve channel allotments. See 47 CFR 1.1204(b) for rules governing permissible *ex parte* contacts.

For information regarding proper filing procedures for comments, See 47 CFR 1.415 and 1.420.

List of Subjects in 47 CFR Part 73

Radio broadcasting.

Federal Communications Commission.

John A. Karousos,

Chief, Allocations Branch, Policy and Rules Division, Mass Media Bureau.

[FR Doc. 95–1952 Filed 1–25–95; 8:45 am]

BILLING CODE 6712–01–F

47 CFR Part 73

[MM Docket No. 95–8; RM–8563]

Radio Broadcasting Services; Tompkinsville, KY

AGENCY: Federal Communications Commission.

ACTION: Proposed rule.

SUMMARY: The Commission requests comments on a petition filed by Falcon Broadcasters proposing the allotment of Channel 274A at Tompkinsville, Kentucky, as the community's second local FM transmission service. An engineering analysis has determined that Channel 274A can be allotted to Tompkinsville, Kentucky, in compliance with the Commission's minimum distance separation requirements with a site restriction of 9.5 kilometers (5.9 miles) southeast to avoid short-spacings to vacant Channel 273C3, Crossville, Tennessee, Station WYCQ(FM), Channel 275C1, Shelbyville, Tennessee, and Station WTKY(FM), Channel 221A, Tompkinsville, Kentucky. The coordinates for Channel 274A at Tompkinsville are North Latitude 36–39–55 and West Longitude 85–35–51.

DATES: Comments must be filed on or before March 16, 1995 and reply comments on or before March 31, 1995.

ADDRESSES: Federal Communications Commission, Washington, D.C. 20554. In addition to filing comments with the FCC, interested parties should serve the petitioner, or its counsel or consultant, as follows: Bradford D. Carey, Esq., Hardy & Carey, L.L.P., 111 Veterans Memorial Blvd., Suite 255, Metairie, Louisiana (Counsel for Petitioner).

FOR FURTHER INFORMATION CONTACT: Sharon P. McDonald, Mass Media Bureau, (202) 634–6530.

SUPPLEMENTARY INFORMATION: This is a synopsis of the Commission's *Notice of Proposed Rule Making,* MM Docket No. 95–8, adopted January 11, 1995, and released January 23, 1995. The full text of this Commission decision is available for inspection and copying during normal business hours in the FCC Reference Center (Room 239), 1919 M Street, NW, Washington, D.C. The complete text of this decision may also be purchased from the Commission's copy contractor, International Transcription Service, Inc., (202) 857–3800, 2100 M Street, NW, Suite 140, Washington, D.C. 20037.

Provisions of the Regulatory Flexibility Act of 1980 do not apply to this proceeding.

Members of the public should note that from the time a Notice of Proposed Rule Making is issued until the matter is no longer subject to Commission consideration or court review, all *ex parte* contacts are prohibited in Commission proceedings, such as this one, which involve channel allotments. See 47 CFR 1.1204(b) for rules governing permissible *ex parte* contacts.

For information regarding proper filing procedures for comments, see 47 CFR 1.415 and 1.420.

List of Subjects in 47 CFR Part 73

Radio broadcasting.

Federal Communications Commission.

John A. Karousos,

Chief, Allocations Branch, Policy and Rules Division, Mass Media Bureau.

[FR Doc. 95–1951 Filed 1–25–95; 8:45 am]

BILLING CODE 6712–01–F

DEPARTMENT OF THE INTERIOR

Fish and Wildlife Service

50 CFR Part 17

RIN 1018–AD06

Endangered and Threatened Wildlife and Plants; Proposed Endangered Status for Brother's Island Tuatara

AGENCY: Fish and Wildlife Service, Interior.

ACTION: Proposed rule.

SUMMARY: The Service proposes to determine endangered status for the Brother's Island tuatara (*Sphenodon guntheri*), a reptile of New Zealand. Although already legally covered by an endangered classification, this species previously was considered part of the related and more widespread tuatara, *Sphenodon punctatus.* Both species are threatened by various factors, especially predation from introduced rats. This proposal, if made final, would continue the protection of the Endangered Species Act of 1973, as amended (Act), for the Brother's Island tuatara.

DATES: Comments on the proposed rule must be submitted by April 26, 1995. Public hearing requests must be received by March 13, 1995.

ADDRESSES: Comments, information, and questions should be submitted to the Chief, Office of Scientific Authority; Mail Stop: Room 725, Arlington Square; U.S. Fish and Wildlife Service; Washington, D.C. 20240 (FAX number 703–358–2276). Express and messenger-delivered mail should be addressed to the Office of Scientific Authority; Room 750, 4401 North Fairfax Drive; Arlington, Virginia 22203. Comments and materials received will be available

for public inspection, by appointment, from 8:00 a.m. to 4:00 p.m., Monday through Friday, at the Arlington, Virginia address.

FOR FURTHER INFORMATION CONTACT: Dr. Charles W. Dane, Chief, Office of Scientific Authority, at the above address (phone 703–358–1708).

SUPPLEMENTARY INFORMATION

Background

Tuataras are a unique group of lizardlike reptiles now restricted to New Zealand and represented by the single genus *Sphenodon*. Because of excessive human hunting and predation by introduced animals, especially rats, tuataras are now found only on various small islands off the coast of the two main islands of New Zealand. For many years, the prevailing view among zoologists was that the living tuataras represented only the single species *Sphenodon punctatus*, and that was the only species on the U.S. List of Endangered and Threatened Wildlife (June 2, 1970; 35 FR 8495).

A recent paper (Daugherty, C.H., A. Cree, J.M. Hay, and M.B. Thompson, 1990, ''Neglected taxonomy and continuing extinctions of tuatara,'' *Nature:* 347:177–179) pointed out that, based on a morphological and genetic analysis, a second species, *S. guntheri*, survived on North Brother Island in Cook Strait. *S. guntheri* actually had been first described in 1877, but over time had come to be regarded as just a component of *S. punctatus*. The population of tuatara on North Brother Island was known at the time that *S. punctatus* was listed as endangered pursuant to the Act and was considered to be a population of *S. punctatus*. The recognition of *S. guntheri* as a distinct species may provide it with increased conservation attention, thereby helping to ensure its continued survival on the one small island from which it is known.

The above technical paper explaining the status of *S. guntheri* was only recently brought to the attention of the U.S. Fish and Wildlife Service (Service) through the kindness of Ms. Cheri L. Hosley of Brownstown, Michigan. Subsequently, the Service contacted several authorities, who supported recognition of *S. guntheri* as a distinct species, and also the Government of New Zealand, which responded favorably. Finally, the World Conservation Union's *1994 IUCN Red List of Threatened Animals* designates *S. guntheri* as a full species and as endangered.

The above information has persuaded the Service of the need to distinguish *S. guntheri* as a separate species on the List of Endangered and Threatened Wildlife, and to classify it there as endangered, together with the species *S. punctatus*. It is emphasized that the reptiles included within *S. guntheri* are already legally covered by an endangered species classification and will remain so until a final decision on this proposal. This proposal does not impact or otherwise change the legal status of either species and does not affect the kinds of activities that are permitted or prohibited.

Summary of Factors Affecting the Species

Section 4(a)(1) of the Endangered Species Act (16 U.S.C. 1531 *et seq.*) and regulations (50 CFR part 424) promulgated to implement the listing provisions of the Act set forth the procedures for adding species to the Federal Lists. A species may be determined to be endangered or threatened due to one or more of the following five factors described in Section 4(a)(1). These factors and their application to the Brother's Island tuatara (*Sphenodon guntheri*) are as follows (information from Daugherty *et al.* 1990, as indicated above):

A. *The present or threatened destruction, modification, or curtailment of its habitat or range. Sphenodon guntheri* is known only from North Brother Island in Cook Strait, New Zealand. The island has an area of only about 10 acres (4 hectares), and the tuatara population is restricted to only about 4.2 acres (1.7 hectares) of scrub habitat on top of the island. The population consists of fewer than 300 adults.

Introduced rats, rabbits, goats, and other animals have damaged habitat of other tuatara populations and could potentially do the same on North Brother Island if *S. guntheri* is not recognized as needing special conservation attention.

B. *Overutilization for commercial, recreational, scientific, or educational purposes.* Not currently known to be a problem. However, automation of the island lighthouse in 1990 led to departure of the resident keepers who had deterred illegal landings and poaching for 123 years. The very small tuatara population could thus be vulnerable to human hunting and harassment.

C. *Disease or predation.* Predation by introduced rats, dogs, cats, and pigs have been a severe problems for other tuatara populations. Deliberate or accidental introduction of even a few such animals on North Brother Island could be disastrous for the tiny tuatara population there. Departure of the lighthouse keepers and failure to recognize *S. guntheri* as a unique species warranting special conservation attention could open the way for such a disaster.

D. *The inadequacy of existing regulatory mechanisms.* Although all tuataras have long received complete legal protection, there has been no recognition of separate and highly restricted species or subspecies, such as *S. guntheri,* that might require special protection and management in order to survive. The departure of the lighthouse keepers from North Brother Island in 1990 has made *S. guntheri* especially vulnerable in this regard.

E. *Other natural or manmade factors affecting its continued existence.* Small and restricted animal populations, especially if adversely affected through human agency, are highly susceptible to natural disasters and to reduction of genetic viability.

The decision to propose endangered status for the Brother's Island tuatara was based on an assessment of the best available scientific information, and of past, present, and probable future threats to this species. It occurs in very small numbers in a highly restricted range and is vulnerable to a variety of problems. If this reptile is not given appropriate recognition and protection, extinction will become more likely. Critical habitat is not being proposed, as such designation is not applicable to foreign species.

Available Conservation Measures

Conservation measures provided to species listed as endangered or threatened pursuant to the Act include recognition, requirements for Federal protection, and prohibitions against certain practices. Recognition through listing encourages conservation measures by Federal, international, and private agencies, groups, and individuals.

Section 7(a) of the Act, as amended, and as implemented by regulations at 50 CFR Part 402, requires Federal agencies to evaluate their actions that are to be conducted within the United States or on the high seas, with respect to any species that is proposed or listed as endangered or threatened and with respect to its proposed or designated critical habitat (if any). Section 7(a)(2) requires Federal agencies to ensure that activities they authorize, fund, or carry out are not likely to jeopardize the continued existence of a listed species or to destroy or adversely modify its critical habitat. If a proposed Federal action may affect a listed species, the responsible Federal agency must enter

into formal consultation with the Service. No such activities are currently known with respect to the species covered by this rule.

Section 8(a) of the Act authorizes the provision of limited financial assistance for the development and management of programs that the Secretary of the Interior determines to be necessary or useful for the conservation of endangered species in foreign countries. Sections 8(b) and 8(c) of the Act authorize the Secretary to encourage conservation programs for foreign endangered species and to provide assistance for such programs, in the form of personnel and the training of personnel.

Section 9 of the Act, and implementing regulations found at 50 CFR 17.21, set forth a series of general prohibitions and exceptions that apply to all endangered wildlife. These prohibitions, in part, make it illegal for any person subject to the jurisdiction of the United States to take, import or export, ship in interstate commerce in the course of commercial activity, or sell or offer for sale in interstate or foreign commerce any endangered wildlife. It also is illegal to possess, sell, deliver, transport, or ship any such wildlife that has been taken in violation of the Act. Certain exceptions apply to agents of the Service and State conservation agencies.

Permits may be issued to carry out otherwise prohibited activities involving endangered wildlife under certain circumstances. Regulations governing permits are codified at 50 CFR 17.22 and 17.23. Such permits are available for scientific purposes, to enhance propagation or survival, or for incidental take in connection with otherwise lawful activities.

Public Comments Solicited

The Service intends that any final rule adopted will be accurate and as effective as possible in the conservation of endangered or threatened species. Therefore, comments and suggestions concerning any aspect of this proposed rule are hereby solicited from the public, concerned governmental agencies, the scientific community, industry, private interests, and other parties. Comments particularly are sought concerning the following:

(1) biological, commercial, or other relevant data concerning any threat (or lack thereof) to the subject species;

(2) the location of any additional populations of the subject species;

(3) additional information concerning the distribution of this species; and

(4) current or planned activities in the involved areas, and their possible effect on the subject species.

Final promulgation of the regulations on the subject species will take into consideration the comments and any additional information received by the Service, and such communications may lead to a final decision that differs from this proposal.

The Endangered Species Act provides for a public hearing on this proposal, if requested. Requests must be filed within 45 days of the date of publication of the proposal, must be in writing, and should be directed to the party named in the above **ADDRESSES** section.

National Environmental Policy Act

The Service has determined that an Environmental Assessment, as defined under the authority of the National Environmental Policy Act of 1969, need not be prepared in connection with regulations adopted pursuant to Section 4(a) of the Endangered Species Act, as amended. A notice outlining the Service's reasons for this determination was published in the **Federal Register** of October 25, 1983 (48 FR 49244).

Author

The primary author of this proposed rule is Ronald M. Nowak, Office of Scientific Authority, U.S. Fish and Wildlife Service, Washington, D.C. 20240 (phone 703–358–1708).

List of Subjects in 50 CFR Part 17

Endangered and threatened species, Exports, Imports, Reporting and recordkeeping requirements, and Transportation.

Proposed Regulation Promulgation

Accordingly, the Service hereby proposes to amend part 17, subchapter B of chapter I, title 50 of the Code of Federal Regulations, as set forth below:

PART 17—[AMENDED]

1. The authority citation for Part 17 continues to read as follows:

Authority: 16 U.S.C. 1361–1407; 16 U.S.C. 1531–1544; 16 U.S.C. 4201–4245; Pub. L. 99–625, 100 Stat. 3500; unless otherwise noted.

2. Amend § 17.11(h) by revising the entry for ''Tuatara'' under REPTILES to read as follows:

§ 17.11 Endangered and threatened wildlife.

* * * * *

(h) * * *

Species		Historic range	Vertebrate population where endangered or threatened	Status	When listed	Critical habitat	Special rules
Common name	Scientific name						
REPTILES							
*	*	*	*	*	*	*	*
Tuatara	Sphenodon punctatus.	New Zealand	Entire	E	3___	NA	N/A
Tuatara Brother's Island.	Sphenodon guntheri	Zealand (N. Brotherns).	Entire	E	3___	N/A	N/A
*	*	*	*	*	*	*	*

Dated: December 20, 1994.

Mollie H. Beattie,

Director, Fish and Wildlife Service.

[FR Doc. 95–1911 Filed 1–25–95; 8:45 am]

BILLING CODE 4310–55–P

DEPARTMENT OF COMMERCE

National Oceanic and Atmospheric Administration

50 CFR Part 655

[Docket No. 950118018–5018–01; I.D. 111494E]

Atlantic Mackerel, Squid, and Butterfish Fisheries

AGENCY: National Marine Fisheries Service (NMFS), National Oceanic and Atmospheric Administration (NOAA), Commerce.

ACTION: Proposed initial specifications for the 1995 Atlantic mackerel, squid, and butterfish fisheries; request for comments.

SUMMARY: NMFS proposes initial specifications for the 1995 fishing year for Atlantic mackerel, squid, and butterfish. Regulations governing this fishery require NMFS to publish specifications for the upcoming fishing year and provide an opportunity for the public to comment. This action is intended to fulfill this requirement and promote the development of the U.S. Atlantic mackerel, squid, and butterfish fisheries.

DATES: Public comments must be received on or before February 27, 1995.

ADDRESSES: Copies of the draft Environmental Assessment are available from the Northeast Regional Office, National Marine Fisheries Service, 1 Blackburn Drive, Gloucester, MA 01930. Copies of the Mid-Atlantic Fishery Management Council's quota paper and recommendations are available from David R. Keifer, Executive Director, Mid-Atlantic Fishery Management Council, Room 2115, Federal Building, 300 South New Street, Dover, DE 19901.

Comments should be sent to Jon C. Rittgers, Acting Regional Director, National Marine Fisheries Service, 1 Blackburn Drive, Gloucester, MA 01930. Please mark the envelope ''Comments—1995 SMB specifications.''

FOR FURTHER INFORMATION CONTACT: Myles Raizin, 508–281–9104.

SUPPLEMENTARY INFORMATION: Regulations implementing the Fishery Management Plan for Atlantic Mackerel, Squid, and Butterfish Fisheries (FMP) prepared by the Mid-Atlantic Fishery Management Council (Council) appear at 50 CFR part 655. These regulations require NMFS to publish a document specifying the initial annual amounts of the initial optimum yield (IOY) as well as the amounts for allowable biological catch (ABC) domestic annual harvest (DAH), domestic annual processing (DAP), joint venture processing (JVP), and total allowable levels of foreign fishing (TALFF) for the species managed under the FMP. No reserves are permitted under the FMP for any of these species. Regulations implementing Amendment 4 to the FMP allow the Council to recommend specifications for these fisheries for up to three consecutive years. Procedures for determining the initial annual amounts are found in § 655.22.

The following table contains the proposed initial specifications for Atlantic mackerel, *Loligo* and *Illex* squids, and butterfish for 1995. These specifications are based on the recommendations of the Council.

PRELIMINARY INITIAL ANNUAL SPECIFICATIONS FOR ATLANTIC MACKEREL, SQUID, AND BUTTERFISH FOR THE FISHING YEAR JANUARY 1 THROUGH DECEMBER 31, 1995

[mt]

Specifications	Squid		Atlantic mackerel	Butterfish
	Loligo	Illex		
Max OY [1]	44,000	30,000	[2] N/A	16,000
ABC [3]	36,000	30,000	850,000	16,000
IOY	36,000	30,000	[4] 100,000	10,000
DAH	36,000	30,000	[5] 100,000	10,000
DAP	36,000	30,000	50,000	10,000
JVP	0	0	35,000	0
TALFF	0	0	0	0

[1] Max OY as stated in the FMP.
[2] Not applicable; see the FMP.
[3] IOY can rise to this amount.
[4] This specification may be increased to 134,000 mt, the long-term potential catch for the Atlantic mackerel fishery.
[5] Contains 15,000 mt projected recreational catch based on the formula contained in the regulations (50 CFR part 655).

Atlantic Mackerel

The FMP provides that ABC in U.S. waters for the upcoming fishing year is that quantity of mackerel that could be caught in U.S. and Canadian waters minus the estimated catch in Canadian waters, while still maintaining a spawning stock size in the year following the year for which catch estimates and quotas are being prepared, equal to or greater than 600,000 mt. Using an estimated spawning stock biomass of 1,500,000 mt and an estimated Canadian catch of 50,000 mt, the ABC is 850,000 mt.

The proposed IOY for the 1995 Atlantic mackerel fishery is set at 100,000 mt, equal to the specified DAH. The proposed specification for DAH is computed by adding the estimated recreational catch, the proposed specified DAP, and the proposed specified JVP. The recreational component of DAH is estimated at 15,000 mt using the formula found at § 655.21(b)(2)(ii). The DAP and JVP components of DAH have historically been estimated using the Council's annual processor survey. However, for the years 1993 and 1994, response was low and did not contain projections from the large, known processors. In addition, inquiries regarding the utilization of displaced Alaskan freezer trawlers and New England groundfish trawlers for possible entry into the Atlantic mackerel fishery have led the Council to recommend no change to the DAP and JVP for the 1995 fishery. It is generally agreed that joint ventures have had a positive impact on the development of the U.S. Atlantic mackerel fishery and should be encouraged.

The Council has recommended and NMFS proposes a specification of 35,000 mt of JVP for the 1995 fishery. The Council also recommended and NMFS proposes a DAP of 50,000 mt yielding a DAH of 100,000 mt, which includes the 15,000 mt recreational component.

Zero TALFF is recommended for the 1995 Atlantic mackerel fishery by the Council and proposed by NMFS. In 1992, the Council used testimony from both the domestic fishing and processing industries and analysis of the nine economic factors listed at § 655.21(b)(2)(ii) to determine that mackerel produced from directed foreign fishing would directly compete with U.S. processed products, thus limiting markets available to U.S. processors. The industry was nearly unanimous in its assessment that a specification of other than zero TALFF would impede the growth of the U.S. fishery. The Council believes that an expanding mackerel market and uncertainty regarding world supply, due to the economic and political restructuring in Eastern Europe, may substantially increase opportunities for U.S. producers to increase sales to new markets abroad. Although the U.S. industry has not been successful in capturing a substantial market share for mackerel in the Caribbean, North Africa, and Europe so far, several factors indicate that market expansion of Atlantic mackerel may occur soon. Atlantic mackerel stock abundance remains high. Also, the continued low abundance amounts of several important groundfish stocks in the Gulf of Maine, southern New England, and on Georges Bank are causing further restrictions in fishing effort for those species and the need for many fishermen to redirect their effort to underutilized species. Atlantic mackerel is now considered a prime candidate for innovation in harvesting, processing, and marketing.

As a supplement to the quota paper for the 1993 and 1994 fisheries, benefit-cost and sensitivity analyses were prepared by the Council and the NMFS. Results of the analyses indicate that in the long term a specification of zero TALFF will yield positive benefits to the fishery and to the Nation.

The Council also recommended and NMFS proposes four special conditions to be imposed on the 1995 Atlantic mackerel fishery as follows: (1) Joint ventures are allowed, but river herring bycatch south of 37°30′ N. lat. may not exceed 0.25 percent of the over-the-side transfers of Atlantic mackerel; (2) the Regional Director should do everything within his power to reduce impacts on marine mammals in prosecuting the Atlantic mackerel fisheries; (3) IOY may be increased during the year, but the total should not exceed 134,000 mt; and (4) applications from any given nation for a joint venture for 1995 will not be decided on until the Regional Director determines, based on an evaluation of performances, that the Nation's purchase obligations for previous years have been fulfilled.

Atlantic Squids

The maximum OY for *Loligo* is 44,000 mt. The recommended ABC for the 1995 fishery is 36,000 mt, representing a decrease of 8,000 mt from the 1993 and 1994 ABC of 44,000 mt. This level of ABC is based on the most recent stock assessments and is determined to be at a level that will not harm the continued growth of the resource. The 17th Northeast Regional Stock Assessment Workshop (SAW) concluded that *Loligo* is an annual species and does not have a 3-year lifespan, as previously assumed. The SAW recommended that a real-time assessment/management system will be needed to ensure an adequate level of spawning stock. This will be addressed in Amendment 5 to the FMP which is scheduled for public hearing this fall. Amendment 5 will also address the need to lower the maximum OY which is defined in the regulations governing the fishery to be 44,000 mt. This specification can be changed only with a plan amendment. In the interim, the Council believes that it would be prudent to reduce the ABC for conservation purposes, as suggested by the SAW. The Council recommended and NMFS proposes an IOY of 36,000 mt, which is equal to DAH and DAP. The expansion of the U.S. freezer trawler and refrigerated sea water fleets that participate in this fishery and substantially increased U.S. landings indicate that there is no longer a justification for foreign participation. DAH and DAP have historically been estimated using the Council annual processor survey. However, for the years 1993 and 1994, response was low and did not contain projections from the large, known processors. Therefore, the Council recommended and NMFS proposes that DAH and DAP be set at 36,000 mt, which is equal to the ABC. These specifications do not allow for JVP or TALFF for *Loligo*.

The maximum OY for *Illex* squid is 30,000 mt. Based on the best available scientific information, the Council recommended and NMFS proposes an ABC of 30,000 mt which is equal to the maximum OY. The Council also recommended and the Regional Director proposes that the IOY for *Illex* be set at 30,000 mt because U.S. harvesters intend to utilize the entire IOY. Consequently, there is no TALFF available. No directed foreign fishery has been specified for *Illex* since 1986, which reflects the large increases in the capacity of the East Coast freezer trawler fleet and projected increases in the number of vessels using refrigerated seawater systems capable of landing high quality *Illex*. Much of the increase in capacity is a function of a general increase in prices. Prices continue to remain strong in the 1994 fishery. Although *Illex* is primarily a bait squid, it has been used as a substitute for *Loligo*, a food squid, in many markets.

Butterfish

The FMP sets the maximum OY for butterfish at 16,000 mt. Based on the most current stock assessments, the Council recommends and the Regional Director proposes an ABC of 16,000 mt for the 1995 fishery, unchanged from the 1992 and the 1993–94 specifications. Commercial landings of butterfish have been low at 4,000 mt, 2,285 mt, and 4,430 mt for the 1991, 1992, and 1993 fisheries, respectively. Estimated landings for the first 3 months of 1994 were 1,732 mt. Lack of market demand and the difficulty in locating schools of market size fish have caused severe reductions in the supply of butterfish. Fishermen and processors believe that the size of butterfish has improved in the 1994 fishery.

The Council recommended and NMFS proposes an IOY for butterfish of 10,000 mt. The U.S. industry has the potential to fully utilize this IOY. Thus, there is no TALFF available. The Council recommends and the Regional Director proposes a DAH of 10,000 mt. There has been no interest expressed in joint ventures, thus, the IOY is proposed at a level that does not allow for a JVP. The Council recommended and NMFS proposes that both JVP and TALFF be specified at zero for the 1995 fisheries. However, the 6,000 mt difference between ABC and IOY is set aside to accommodate an increase in IOY if economic conditions dictate.

Classification

This action is authorized by 50 CFR part 655, and these proposed specifications are exempt from review under E.O. 12866.

Authority: 16 U.S.C. 1801 *et seq.*

Dated: January 19,1995.

Gary Matlock,

Program Management Officer, National Marine Fisheries Service.

[FR Doc. 95–1908 Filed 1–25–95; 8:45 am]

BILLING CODE 3510–22–W

Notices

Federal Register

Vol. 60, No. 17

Thursday, January 26, 1995

This section of the FEDERAL REGISTER contains documents other than rules or proposed rules that are applicable to the public. Notices of hearings and investigations, committee meetings, agency decisions and rulings, delegations of authority, filing of petitions and applications and agency statements of organization and functions are examples of documents appearing in this section.

DEPARTMENT OF AGRICULTURE

Natural Resources Conservation Service

East Walker Watershed, Nevada; Notice of Intent to Deauthorize Federal Funding

AGENCY: Natural Resources Conservation Service, USDA.

ACTION: Notice of intent to deauthorize federal funding.

SUMMARY: Pursuant to the Watershed Protection and Flood Prevention Act, Public Law 83–566, and the Natural Resources Conservation Service Guidelines (7 CFR 622), the Natural Resources Conservation Service gives notice of the intent to deauthorize Federal funding for the East Walker Watershed Project, Lyon County, Nevada.

FOR FURTHER INFORMATION CONTACT: William D. Goddard, State Conservationist, Natural Resources Conservation Service, 5301 Longley Lane, Building F, Suite 201, Reno, Nevada 89511, telephone: (702) 784–5863.

SUPPLEMENTARY INFORMATION: A determination has been made by William D. Goddard that the proposed works of improvement for the East Walker Watershed project will not be installed. The sponsoring local organizations have concurred in this determination and agree that Federal funding should be deauthorized for the project. Information regarding this determination may be obtained from William D. Goddard, State Conservationist, at the above address and telephone number.

No administrative action on implementation of the proposed deauthorization will be taken until 60 days after the date of this publication in the **Federal Register.**

(Catalog of Federal Domestic Assistance Program No. 10.904, Watershed Protection and Flood Prevention. Office of Management and Budget Circular A–95 regarding State and local clearinghouse review of Federal and federally assisted programs and projects is applicable.)

Dated: January 17, 1995.

William D. Goddard,

State Conservationist.

[FR Doc. 95–1990 Filed 1–25–95; 8:45 am]

BILLING CODE 3410–16–M

Nolan River Watershed, Johnson County, TX

AGENCY: Natural Resources Conservation Service.

ACTION: Notice of a finding of no significant impact.

SUMMARY: Pursuant to Section 102(2)(C) of the National Environmental Policy Act of 1969; the Council on Environmental Quality Guidelines (40 CFR part 1500); and the Natural Resources Conservation Service Guidelines (7 CFR part 650); the Natural Resources Conservation Service, U.S. Department of Agriculture, gives notice that an environmental impact statement is not being prepared for the Nolan River Watershed, Johnson County, Texas.

FOR FURTHER INFORMATION CONTACT: Harry W. Oneth, State Conservationist, Natural Resources Conservation Service, 101 South Main, Temple, Texas 76501–7682, telephone (817) 774–1214.

SUPPLEMENTARY INFORMATION: The environmental assessment of this federally assisted action indicates that the project will not cause significant local, regional, or national impacts on the environment. As a result of these findings, Harry W. Oneth, State Conservationist, has determined that the preparation and review of an environmental impact statement is not needed for this project.

The project will improve surface water quality in and below the watershed by assisting in a program to reduce the pollutant load from 29 of the 36 dairies in the watershed. The plan will provide financial and technical assistance to install animal waste management systems and associated land treatment practices on 29 dairy farms. Implementation of the plan will be accomplished through the local soil and water conservation district. This project will be supplemented by the Agricultural Conservation Program in the watershed. The plan will be applied during a ten year period.

The Notice of a Finding of No Significant Impact (FONSI) has been forwarded to the Environmental Protection Agency and to various Federal, State, and local agencies and interested parties. A limited number of copies of the FONSI are available to fill single copy requests at the above address. Basic data developed during the environmental assessment are on file and may be reviewed by contacting Harry W. Oneth.

No administrative action on implementation of the proposal will be taken until 30 days after the date of this publication in the **Federal Register**.

Dated: January 17, 1995.

Harry W. Oneth,

State Conservationist.

[FR Doc. 95–1993 Filed 1–25–95; 8:45 am]

BILLING CODE 3410–16–M

COMMISSION ON CIVIL RIGHTS

Agenda and Notice of Public Meeting of the District of Columbia Advisory Committee

Notice is hereby given, pursuant to the provisions of the rules and regulations of the U.S. Commission on Civil Rights, that a meeting of the District of Columbia Advisory Committee will convene at 2:00 p.m. and adjourn at 4:00 p.m. on Thursday, February 16, 1995, in conference room 540 of the U.S. Commission on Civil Rights, 624 Ninth St., NW., Washington, DC 20425. The purpose of the meeting to review the materials from the fact-finding meeting on home lending discrimination held on December 12, 1994.

Persons desiring additional information, or planning a presentation to the Committee, should contact Committee Chairperson Charito Kruvant, 202–966–5804, on Edward Darden, Acting director of the Eastern Regional Office, 202–376–7533 (TDD 202–376–8116). Hearing-impaired persons who will attend the meeting and require the services of a sign language interpreter should contact the Regional Office at least five (5) working days before the scheduled date of the meeting.

The meeting will be conducted pursuant to the provisions of the rules and regulations of the Commission.

Dated at Washington, DC, January 20, 1995.

Carol-Lee Hurley,

Chief, Regional Programs Coordination Unit.

[FR Doc. 95–1998 Filed 1–25–95; 8:45 am]

BILLING CODE 6335–01–M

DEPARTMENT OF COMMERCE

Foreign-Trade Zones Board; Grant of Authority; Establishment of a Foreign-Trade Zone Medford-Jackson County, OR

[Order No. 719]

Pursuant to its authority under the Foreign-Trade Zones Act of June 18, 1934, as amended (19 U.S.C. 81a–81u), the Foreign-Trade Zones Board (the Board) adopts the following Order:

Whereas, by an Act of Congress approved June 18, 1934, an Act ''To provide for the establishment . . . of foreign-trade zones in ports of entry of the United States, to expedite and encourage foreign commerce, and for other purposes,'' as amended (19 U.S.C. 81a–81u) (the Act), the Foreign-Trade Zones Board (the Board) is authorized to grant to qualified corporations the privilege of establishing foreign-trade zones in or adjacent to U.S. Customs ports of entry;

Whereas, Jackson County, Oregon (the Grantee), an Oregon municipal corporation, has made application to the Board (FTZ Doc. 54–93, 58 FR 61064, 11/19/93) (amended 3/17/94), requesting the establishment of a foreign-trade zone at the Medford-Jackson County Airport, a Customs user fee airport, with additional site in Medford and Jackson County, Oregon; and,

Whereas, notice has been given in the **Federal Register** and the Board has found that the requirements of the Act and Board's regulations are satisfied, and that approval of the application is in the public interest;

Now, Therefore, the Board hereby grants to the Grantee the privilege of establishing a foreign-trade zone, designated on the records of the Board as Foreign-Trade Zone No. 206, at the sites described in the application, as amended, subject to the Act and the Board's regulations, including Section 400.28.

Signed at Washington, DC, this 11th day of January 1995.

Foreign-Trade Zones Board.

Ronald H. Brown,

Secretary of Commerce, Chairman and Executive Officer.

Attest:

John J. Da Ponte, Jr.,

Executive Secretary.

[FR Doc. 95–2000 Filed 1–25–95; 8:45 am]

BILLING CODE 3510–DS–M

International Trade Administration

University of California, et al.; Notice of Consolidated Decision on Applications for Duty-Free Entry of Scientific Instruments

This is a decision consolidated pursuant to Section 6(c) of the Educational, Scientific, and Cultural Materials Importation Act of 1966 (Pub. L. 89–651, 80 Stat. 897; 15 CFR 301). Related records can be viewed between 8:30 A.M. and 5:00 P.M. in Room 4211, U.S. Department of Commerce, 14th and Constitution Avenue, N.W., Washington, D.C.

Comments: None received. *Decision:* Approved. No instrument of equivalent scientific value to the foreign instruments described below, for such purposes as each is intended to be used, is being manufactured in the United States.

Docket Number: 94–064R. *Applicant:* University of California, Berkeley, CA 94720. *Instrument:* Superconducting Solenoid. *Manufacturer:* Atomimpex, CIS. *Intended Use:* See notice at 59 FR 31208, June 17, 1994. *Reasons:* The foreign instrument provides: (1) a field strength of 3.0T in a uniform field region 60 cm long and 5 cm in radius, (2) axial field uniformity to ± 0.25%, (3) azimuth symmetric to an accuracy of 10^{-4} and (4) high vacuum integrity. *Advice Received From:* The Department of Energy, December 20, 1994.

Docket Number: 94–127. *Applicant:* California Institute of Technology, Pasadena, CA 91125. *Instrument:* Telescope System. *Manufacturer:* Astrophysical Laboratory of National Tsing Hau University, Republic of China. *Intended Use:* See notice at 59 FR 59212, November 16, 1994. *Reasons:* The foreign instrument provides identical optical design and construction to serve as a link in an earth-circling chain of six telescopes to provide uninterrupted measurements of solar oscillation in collaborative studies of helioseismology. *Advice Received From:* The National Optical Astronomy Observatories, December 15, 1994.

The Department of Energy and The National Optical Astronomy Observatories advise that (1) the capabilities of each of the foreign instruments described above are pertinent to each applicant's intended purpose and (2) they know of no domestic instrument or apparatus of equivalent scientific value for the intended use of each instrument.

We know of no other instrument or apparatus being manufactured in the United States which is of equivalent scientific value to either of the foreign instruments.

Pamela Woods

Acting Director, Statutory Import Programs Staff

[FR Doc. 95–2002 Filed 1–25–95; 8:45 am]

BILLING CODE 3510–DS–F

Applications for Duty-Free Entry of Scientific Instruments

Pursuant to Section 6(c) of the Educational, Scientific and Cultural Materials Importation Act of 1966 (Pub. L. 89–651; 80 Stat. 897; 15 CFR part 301), we invite comments on the question of whether instruments of equivalent scientific value, for the purposes for which the instruments shown below are intended to be used, are being manufactured in the United States.

Comments must comply with 15 CFR 301.5(a)(3) and (4) of the regulations and be filed within 20 days with the Statutory Import Programs Staff, U.S. Department of Commerce, Washington, D.C. 20230. Applications may be examined between 8:30 A.M. and 5:00 P.M. in Room 4211, U.S. Department of Commerce, 14th Street and Constitution Avenue, N.W., Washington, D.C.

Docket Number: 94–154. *Applicant:* University of Hawaii, School of Ocean and Earth Science and Technology, Department of Geology & Geophysics, 2525 Correa Road, Honolulu, HI 96822. *Instrument:* ICP Mass Spectrometer, Model PlasmaQuad. *Manufacturer:* Fisons Instruments, United Kingdom. *Intended Use:* The instrument will be used for the determination of elemental abundances and isotopic ratios in a variety of solid and fluid samples. The instrument is essential for continuing and new studies in the general fields of: 1) mid-ocean ridge processes, 2) processes in active back-arc basins and island arcs, 3) mantle plumes and hotspots, 4) deep interior of the Earth, 5) extraterrestrial materials 6) marine mineral deposits, 7) marine particulates and sediments, 8) atmospheric particulates and sediment trap material, 9) hydrothermal processes and 10) Ocean Drilling Program related research. In addition, the instrument will be used

for various educational purposes such as teaching the theory of operation and standard analytical practices and for other curriculum courses. *Application Accepted by Commissioner of Customs:* December 29, 1994.

Docket Number: 95–001. *Applicant:* Beckman Research Institute of the City of Hope, Division of Immunology, 1450 East Duarte Road, Duarte, CA 91010. *Instrument:* Mass Spectrometer, Model MAT 900. *Manufacturer:* Finnigan MAT, Germany. *Intended Use:* The instrument will be used to characterize macromolecular structures, principally peptides and proteins, isolated in small quantities from biological systems. There is also a limited need for the accurate mass analysis of small organic molecules with sufficient resolution and mass accuracy to define elemental composition. *Application Accepted by Commissioner of Customs:* January 4, 1995.

Pamela Woods

Acting Director, Statutory Import Programs Staff

[FR Doc. 95–2003 Filed 1–25–95; 8:45 am]

BILLING CODE 3510–DS–F

[C–201–405]

Certain Textile Mill Products from Mexico; Preliminary Results of Countervailing Duty Administrative Review

AGENCY: Import Administration, International Trade Administration, Commerce.

ACTION: Notice of Preliminary Results of Countervailing Duty Administrative Review.

SUMMARY: The Department of Commerce (the Department) is conducting an administrative review of the countervailing duty order on certain textile mill products from Mexico for the period January 1, 1992, through December 31, 1992. We preliminarily determine the total net subsidy to be 0.15 percent *ad valorem* for all companies during this review period. In accordance with 19 CFR 355.7, any rate less than 0.50 percent *ad valorem* is *de minimis.* We invite interested parties to comment on these preliminary results.

EFFECTIVE DATE: January 26, 1995.

FOR FURTHER INFORMATION CONTACT: Mercedes Fitchett or Dana Mermelstein, Office of Countervailing Compliance, Import Administration, International Trade Administration, U.S. Department of Commerce, 14th Street and Constitution Avenue, N.W., Washington, D.C. 20230, telephone: (202) 482–2786.

SUPPLEMENTARY INFORMATION:

Background

On March 12, 1993, the Department published a notice of ''Opportunity to Request Administrative Review'' (58 FR 13583) for the countervailing duty order on certain textile mill products from Mexico (50 FR 10824; March 18, 1985). We received a request for review from the Amalgamated Clothing and Textile Workers Union (ACTWU), an interested party. The Government of Mexico and the Camara Nacional de la Industria Textil, a Mexican textile trade association, objected to ACTWU's request for review, claiming that ACTWU was not an interested party. The Department reviewed the information provided by the ACTWU with its request for review, which indicated that ACTWU members produced the subject merchandise. In accordance with 19 CFR § 355.2, the Department determined that ACTWU is an interested party in the proceeding, and is thus entitled to request an administrative review.

We initiated the review, covering the period January 1, 1992, through December 31, 1992, on May 6, 1993 (58 FR 26960). This review involves 32 companies and 10 government programs. The Department is now conducting this review in accordance with section 751 of the Tariff Act of 1930, as amended (the Act).

Scope of Review

Imports covered by this review are certain textile mill products from Mexico. Shipments of such merchandise are classifiable under the Harmonized Tariff Schedule (HTS) item numbers listed in the Appendix to this notice.

Calculation Methodology for Assessment and Deposit Purposes

We calculated the net subsidy on a country-wide basis by first calculating the subsidy rate for each company subject to the administrative review. We then weight-averaged the rate received by each company using as the weight its share of total Mexican exports to the United States of subject merchandise, including all companies, even those with *de minimis* and zero rates. We then summed the individual companies' weighted-average rates to determine the subsidy rate from all programs benefiting exports of subject merchandise to the United States.

Since the country-wide rate calculated using this methodology was *de minimis,* as defined by 19 CFR § 355.7(1994), no further calculations were necessary.

Analysis of Programs

(1) BANCOMEXT Financing for Exporters

Effective January 1, 1992, the Mexican Treasury Department eliminated the FOMEX loan program and transferred the FOMEX trust to the Banco Nacional de Comercio Exterior, S.N.C. (BANCOMEXT). The BANCOMEXT program operates much like its predecessor, FOMEX. BANCOMEXT offers short-term financing to producers or trading companies engaged in export activities; any company generating foreign currency through exports is eligible for financing under this program. In addition, BANCOMEXT may provide financing to foreign buyers of Mexican goods and services. BANCOMEXT provides two types of financing, both in U.S. dollars: working capital loans (pre-export loans), and loans secured by export sales (export loans).

The Department has previously found this program to confer an export subsidy to the extent that the loans are provided at preferential rates. *See, e.g., Ceramic Tile From Mexico; Preliminary Results of Countervailing Duty Review* (57 FR 5997; February 19, 1992) and *Ceramic Tile From Mexico; Final Results of Countervailing Duty Review* (57 FR 24247; June 8, 1992). In this review, the Government of Mexico provided no new information or evidence of changed circumstances that would warrant reconsideration of that determination.

Because loans are provided by BANCOMEXT to commercial banks in dollars and indexed to dollars for repayment, we used a dollar benchmark. *See Certain Steel Products from Mexico; Final Countervailing Duty Determination* (58 FR 37357; July 9, 1993). To determine the benchmark for BANCOMEXT pre-export and export loans on which interest was due during 1992, we used the average of the quarterly weighted-average effective interest rates published in the *Federal Reserve Bulletin,* namely 7.18 percent. Generally, the BANCOMEXT loans under review were granted at annual interest rates ranging from 7.0 percent to 11.11 percent.

We consider the benefits from preferential loans to occur at the time the interest is paid. Because interest on BANCOMEXT pre-export loans is paid at maturity, we calculated benefits based on pre-export loans that matured during the review period; such loans were obtained between March 1992 and May 1992. Interest on BANCOMEXT

export loans is paid in advance; we therefore calculated benefits based on BANCOMEXT export loans received during the review period. Also, because exporters are able to tie BANCOMEXT loans to specific shipments, we measure the benefit only from BANCOMEXT loans tied to shipments of the subject merchandise to the United States.

Several exporters of certain textile mill products used BANCOMEXT export sales financing; however, during the review period, BANCOMEXT charged a preferential annual interest rate on only one loan. To determine the benefit for this loan, we multiplied the difference between the interest rate charged and the benchmark interest rate by the principal and then multiplied this amount by the term of the loan divided by 365. We then divided the BANCOMEXT benefit by the value of the company's total exports of subject merchandise to the United States during the review period and then weight-averaged the resulting benefit by the company's portion of total exports of subject merchandise to the United States. On this basis, we preliminarily determine the benefit from this program to be less than 0.005 percent *ad valorem*.

(2) PITEX

The Program for Temporary Importation of Products used in the Production of Exports (PITEX) was established by a decree published in the *Diario Oficial* on May 9, 1985, and amended in the *Diario Oficial* on September 19, 1986, and May 3, 1990. The program is jointly administered by the Ministry of Commerce and Industrial Development (SECOFI) and the Customs Administration. Under PITEX, exporters with a proven export record may receive authorization to temporarily import products to be used in the production of exports for up to five years without having to pay the import duties normally imposed on those imports. PITEX allows for the exemption of import duties for the following categories of merchandise used in export production: raw materials, packing materials, fuels and lubricants, machinery used to manufacture products for export, and spare parts and other machinery. The importer must post a bond or other security to guarantee the reexportation of the temporary imports. Because it is only available to exporters, the Department previously found in *Certain Textile Mill Products From Mexico; Final Results of Countervailing Duty Administrative Review* (56 FR 50859; October 9, 1991) and *Ceramic Tile From Mexico; Final Results of Countervailing Duty Administrative Review* (57 FR 24247; June 8, 1992) that PITEX provides countervailable benefits to the extent that it provides duty exemptions on imports of merchandise not physically incorporated into exported products. In this review, the Government of Mexico provided no new information or evidence of changed circumstances that would warrant reconsideration of that determination.

During the review period, three firms used the PITEX program for temporary imports of machinery and spare parts which are not physically incorporated into exported products. To calculate the benefit from this program, we first calculated the duties which would have otherwise been paid by each company on the non- physically incorporated items that were imported under the PITEX program during the review period. We then divided that amount by each company's total exports of subject merchandise to the United States during the review period and then weight-averaged the resulting benefit by each company's portion of total exports of subject merchandise to the United States. On this basis, we preliminarily determine the benefit from this program to be 0.15 percent *ad valorem*.

(3) Other Programs

We also examined the following programs and preliminarily determine that producers and exporters of the subject merchandise did not apply for or receive benefits under these programs during the review period:

(A) Other BANCOMEXT preferential financing;
(B) Fiscal Promotion Certificates (CEPROFI);
(C) Import duty reductions and exemptions;
(D) State tax incentives;
(E) Article 15 Loans;
(F) NAFINSA FONEI-type financing; and
(G) NAFINSA FOGAIN-type financing.

Preliminary Results of Review

We preliminarily determine the total net subsidy to be 0.15 percent *ad valorem* during the period January 1, 1992 through December 31, 1992. In accordance with 19 CFR 355.7, any rate less than 0.5 percent *ad valorem* is *de minimis*.

If the final results of this review remain the same as these preliminary results, the Department intends to instruct the Customs Service to liquidate, without regard to countervailing duties, all shipments of the subject merchandise from Mexico exported on or after January 1, 1992, and on or before December 31, 1992. Further, as provided by section 751(a)(1) of the Act, the Department will instruct Customs to collect cash deposits of estimated countervailing duties at a rate of zero for all shipments of the subject merchandise from Mexico entered, or withdrawn from warehouse, for consumption on or after the date of publication of the final results of this administrative review.

Parties to the proceeding may request disclosure of the calculation methodology and interested parties may request a hearing not later than 10 days after the date of publication of this notice. Interested parties may submit written arguments in case briefs on these preliminary results within 30 days of the date of publication. Rebuttal briefs, limited to arguments raised in case briefs, may be submitted seven days after the time limit for filing the case brief. Any hearing, if requested, will be held seven days after the scheduled date for submission of rebuttal briefs. Copies of case briefs and rebuttal briefs must be served on interested parties in accordance with 19 CFR 355.38(e).

Representatives of parties to the proceeding may request disclosure of proprietary information under administrative protective order no later than 10 days after the representative's client or employer becomes a party to the proceeding, but in no event later than the date the case briefs, under 19 CFR 355.38(c), are due.

The Department will publish the final results of this administrative review including the results of its analysis of issues raised in any case or rebuttal brief or at a hearing.

This administrative review and notice are in accordance with section 751(a)(1) of the Tariff Act (19 U.S.C. 1675(a)(1)) and 19 CFR 355.22.

Dated: January 16, 1995.

Susan G. Esserman

Assistant Secretary for Import Administration.

APPENDIX—CERTAIN TEXTILE MILL PRODUCTS FROM MEXICO C–201–405 HARMONIZED TARIFF SYSTEM (HTS) NUMBERS

4010.10.10	5109.10.60	5109.90.60	5111.11.70	5111.19.60
5111.20.90	5111.30.90	5112.20.30	5112.30.30	5204.11.00

APPENDIX—CERTAIN TEXTILE MILL PRODUCTS FROM MEXICO C–201–405 HARMONIZED TARIFF SYSTEM (HTS) NUMBERS—Continued

5204.19.00	5204.20.00	5205.11.10	5205.12.10	5205.12.20
5205.13.10	5205.13.20	5205.14.10	5205.23.00	5205.24.00
5205.25.00	5205.31.00	5205.32.00	5205.33.00	5205.34.00
5205.42.00	5205.43.00	5205.44.00	5206.11.00	5206.12.00
5206.13.00	5206.14.00	5206.15.00	5206.31.00	5206.32.00
5206.33.00	5206.34.00	5206.35.00	5206.41.00	5206.42.00
5206.43.00	5206.44.00	5206.45.00	5207.10.00	5207.90.00
5208.11.20	5208.12.40	5208.13.00	5208.19.40	5208.21.20
5208.21.40	5208.22.40	5208.22.60	5208.23.00	5208.29.40
5208.29.60	5208.31.40	5208.31.60	5208.31.80	5208.32.30
5208.32.40	5208.32.50	5208.33.00	5208.39.20	5208.39.80
5208.41.40	5208.41.60	5208.41.80	5208.42.30	5208.42.40
5208.42.50	5208.43.00	5208.49.40	5208.51.40	5208.51.60
5208.51.80	5208.52.30	5208.52.40	5208.52.50	5208.53.00
5208.59.20	5208.59.80	5209.11.00	5209.19.00	5209.31.60
5209.32.00	5209.41.60	5209.43.00	5209.51.60	5209.52.00
5210.21.40	5210.21.60	5210.22.00	5210.29.40	5210.29.60
5210.32.00	5210.39.40	5210.39.60	5210.52.00	5210.59.40
5210.59.60	5211.31.00	5211.51.00	5401.10.00	5401.20.00
5402.10.30	5402.20.30	5402.31.30	5402.31.60	5402.32.30
5402.32.60	5402.33.30	5402.41.00	5402.43.00	5402.49.00
5402.51.00	5402.52.00	5402.59.00	5403.20.30	5403.20.60
5406.10.00	5406.20.00	5407.41.00	5407.42.00	5407.43.20
5407.44.00	5407.52.20	5407.53.10	5407.53.20	5407.54.00
5407.60.05	5407.60.10	5407.60.20	5407.91.05	5407.92.05
5407.93.05	5407.94.05	5408.21.00	5408.22.00	5408.23.20
5408.24.00	5408.31.05	5408.32.05	5408.33.05	5408.34.05
5508.10.00	5508.20.00	5509.12.00	5509.21.00	5509.22.00
5509.31.00	5509.32.00	5509.41.00	5509.51.30	5509.51.60
5509.53.00	5509.69.20	5509.69.40	5509.99.20	5509.99.40
5511.10.00	5511.20.00	5511.30.00	5513.11.00	5513.13.00
5513.19.00	5513.21.00	5513.23.00	5513.29.00	5513.33.00
5513.39.00	5513.41.00	5513.43.00	5513.49.00	5514.11.00
5514.19.00	5514.21.00	5514.29.00	5514.41.00	5514.49.00
5515.13.05	5516.11.00	5516.12.00	5516.13.00	5516.14.00
5516.41.00	5516.42.00	5516.43.00	5516.44.00	5516.91.00
5516.92.00	5516.93.00	5516.94.00	5601.10.20	5601.22.00
5602.10.90	5602.21.00	5602.90.60	5603.00.90	5607.41.30
5607.49.15	5607.49.25	5607.50.20	5608.11.00	5701.10.16
5701.10.20	5701.90.20	5702.10.90	5702.31.10	5702.31.20
5702.32.10	5702.32.20	5702.41.10	5702.41.20	5702.42.10
5702.42.20	5702.51.20	5702.51.40	5702.52.00	5702.91.30
5702.91.40	5702.92.00	5703.10.00	5703.20.10	5703.20.20
5703.30.00	5704.10.00	5704.90.00	5705.00.20	5801.31.00
5801.33.00	5801.34.00	5801.35.00	5801.36.00	5803.10.00
5803.90.30	5804.10.00	5804.21.00	5804.29.00	5804.30.00
5805.00.25	5806.32.10	5810.10.00	5810.91.00	5810.92.00
5902.10.00	5902.20.00	5902.90.00	5911.10.20	5911.20.10
5911.31.00	5911.32.00	6001.10.20	6001.22.00	6001.92.00
6002.10.80	6002.20.10	6002.20.60	6002.30.20	6002.43.00
6002.93.00	6301.10.00	6301.20.00	6301.30.00	6301.40.00
6301.90.00	6302.22.10	6302.22.20	6302.32.10	6302.32.20
6302.40.10	6302.40.20	6302.51.10	6302.51.20	6302.51.30
6302.51.40	6302.52.10	6302.52.20	6302.53.00	6302.59.00
6302.91.00	6302.92.00	6302.93.20	6302.99.20	6303.12.00
6303.19.00	6303.92.00	6303.99.00	6304.11.20	6304.19.05
6304.19.15	6304.19.20	6304.91.00	6304.92.00	6304.93.00
6304.99.15	6304.99.60	7019.20.10	9404.90.90	.....

5209.32.00 Coverage limited to fabrics, not napped, of numbers 17 to 33.

5209.52.00 Coverage limited to fabrics, not napped, of numbers 17 to 33.

5402.10.30 Coverage limited to yarns provided for in subheading 5402.10.3040.

5402.20.30 Coverage limited to yarns provided for in subheading 5402.20.3040.

5402.33.30 Coverage limited to yarns, valued not over $2.20 per kilogram.

5402.41.00 Coverage limited to yarns provided for in subheading 5402.41.0040.

5402.43.00 Coverage limited to yarns provided for in subheading 5402.42.0040.

5402.49.00 Coverage limited to yarns provided for in subheading 5402.49.0070 and 5402.49.0080.

5509.31.00 Not to include single blended yarns containing a combination of noncontinuous acrylic and continuous nylon filaments.

5509.32.00 Not to include plied blended yarns containing a combination of noncontinuous acrylic and continuous nylon filaments.

[FR Doc. 95–2001 Filed 1–25–95; 8:45 am]

BILLING CODE 3510–DS–P

DEPARTMENT OF DEFENSE

Department of the Army

Army Science Board; Notice of Open Meeting

In accordance with Section 10(a)(2) of the Federal Advisory Committee Act (P.L. 92–463), announcement is made of the following Committee Meeting:

Name of Committee: Army Science Board (ASB).

Date of Meeting: February 15 and 16, 1995.

Time of Meeting: 1300–1600 February 15, 1995; 0900–1600, February 16, 1995.

Place: Bethesda, MD.

Agenda: The Army Science Board (ASB) Analysis, Test and Evaluation Issue Group will conduct an assessment of the ''Army Analytical Agencies' Capability for Mission Accomplishment''. This meeting will be open to the public. Any interested person may attend, appear before, or file statements with the committee at the time and in the manner permitted by the committee. The ASB Administrative Officer, Sally Warner, may be contacted for further information at (703) 695–0781.

Sally A. Warner,

Administrative Officer, Army Science Board.

[FR Doc. 95–1901 Filed 1–25–95; 8:45 am]

BILLING CODE 3710–08–M

Department of the Navy

Record of Decision for Realignment of Naval Air Warfare Center Aircraft Division, Patuxent River, MD

Pursuant to Section 102(2)C of the National Environmental Policy Act (NEPA) of 1969 and the Council on Environmental Quality Regulations for implementing NEPA procedures (40 CFR 1500–1508), the Department of the Navy announces its decision to implement realignment of Naval Air Warfare Center Aircraft Division (NAWCAD), Patuxent River, Maryland.

In accordance with legislative requirements of the Base Closure and Realignment Act of 1990 (Public Law 101–510), as implemented by the 1993 Base Closure and Realignment process (BRAC–93), the Navy was directed to realign operations and personnel from the Naval Air Systems Command (NAVAIR) in Arlington, Virginia and NAWCAD in Trenton, New Jersey to NAWCAD Patuxent River, Maryland. The realignment involves relocating approximately 2,670 administrative personnel from leased space in Arlington and 116 research personnel from the existing NAWCAD Trenton facility to NAWCAD Patuxent River. To meet the facility and operational requirements of the realignment, Navy will construct administrative, laboratory, and engine testing facilities at NAWCAD Patuxent River. The realignment will also require minor modifications to the existing child care facility, utilities improvements, and improvements to Buse Road at the site of the administrative facility.

A Draft Environmental Impact Statement (DEIS) was prepared for the action and distributed to Federal, State, and local agencies and to interested individuals and groups. The DEIS was made available to the public on 25 August 1994 and evaluated alternative sites and environmental impacts of the construction and operation of new facilities. A Final EIS (FEIS), which was made available to the public on 9 December 1994, primarily addressed public and agency comments to the DEIS and provided further clarification of anticipated environmental impacts. The EIS process evaluated the foreseeable physical, biological, and socioeconomic impacts from facility construction and operation on-base and to the Tri-County area from the additional personnel associated with the realignment. The comment period for the FEIS expired 9 January 1995 and only one agency response has been received; and it was supportive in nature.

The Defense Base Closure and Realignment Act waived certain aspects of NEPA such that the environmental analysis need not consider the no-action alternative (no realignment), nor other realignment locations. However, alternative means of accommodating the mandated BRAC–93 realignment at NAWCAD Patuxent River were considered. Existing facilities were evaluated, but were determined not suitable for the NAVAIR and NAWCAD Trenton activities. An initial site selection study was performed to identify potential alternative sites for the construction of new facilities at NAWCAD Patuxent River. These potential alternative sites were then evaluated against refined evaluation criteria that addressed the site's suitability. The refined evaluation criteria included land use issues, environmental issues, operational requirements, and development costs. The alternatives evaluation process resulted in the following projects to accommodate the realignment.

The NAVAIR headquarters facility includes a five-story, 462,500 square feet (SF) administrative building, three-story parking garage, and surface parking. Construction of the facilities will require demolition of existing structures, removal of 16 acres of trees, and construction and relocation of utilities infrastructure, including an electrical substation adjacent to the existing utilities right-of-way. A stormwater detention basin will be constructed to retain runoff from impervious surfaces. Buse Road will be widened from Cuddihy Road to south of the NAVAIR facility. The existing two-lane road will be widened to four lanes plus a median.

Realignment of NAWCAD Trenton will require the construction of engine testing facilities (cells) and related laboratories. The Propulsion System Evaluation Facility (PSEF), which will be located north of Building 106, offers access to the airfield, access to a fuel supply, close proximity to supporting facilities, land use compatibility and minimal environmental impacts. The test cells will be composed of nine specific units designed to test engines, turbines, alternative fuels, and engine starters. The PSEF includes a 100,000 SF one-story building to accommodate the nine test cells and associated laboratories and offices, a cooling tower, several small equipment storage buildings, and a parking lot. Operation of the specialized cells will require utility hook-ups and an underground fuel supply pipeline system. A detention basin will control stormwater runoff from the PSEF.

The on-base child-care facility (Building 2030) will be expanded by adding 3,560 SF to accommodate dependents of military personnel.

All practicable means to avoid or minimize environmental impacts at NAWCAD Patuxent River will be adopted during the construction and operation of the facilities. Navy will obtain all appropriate construction and operation permits and approvals from jurisdictional agencies prior to implementation. Construction of the facilities will result in the loss of approximately 16 acres of woodlands. This represents less than one percent of the woodlands on-base and no reforestation measures are proposed. No jurisdictional wetlands, or threatened or endangered species will be affected by the realignment action. Regional air quality is not expected to be degraded as a result of the proposed action. Although NAWCAD Patuxent River is located in an attainment area and the 1993 Clean Air Act General Conformity Rule does not apply, the EIS evaluated potential air quality impacts in neighboring Calvert and Charles Counties (designated as non-attainment for ozone). That analysis concluded that realignment-related commuter traffic will result in *de minimis* air emissions, and therefore will conform to the State Implementation Plan for air quality.

The EIS evaluated potential impacts to Maryland Coastal Resources and concluded that the realignment of NAWCAD Patuxent River will be consistent with Maryland Coastal Zone policies to the maximum extent practicable.

Construction of a portion of the parking lot for the NAVAIR Headquarters facility will adversely affect a known archeological site. Pursuant to the National Historic Preservation Act, a Memorandum of Agreement with the Maryland Historical Trust (MHT) will coordinate further treatment of the site through a Phase III data recovery survey prior to allowing construction of that portion of the parking lot to ensure that adverse affects will be mitigated to the greatest extent possible. Building 408, a World War II-era temporary structure, will be demolished to accommodate the NAVAIR facility. Demolition of Building 408 will be conducted in accordance with the 1985 Programmatic Agreement covering such structures.

Regional impacts associated with the relocation of approximately 2,800 personnel and their families were addressed in the EIS. Extensive coordination with state and local agencies, economic development groups, school boards, and community officials were conducted to assess the potential economic and community impacts associated with the realignment. Because some personnel may stay at their current residences, it is conservatively estimated that 2,185 new households could relocate to the Tri-County region of southern Maryland. Direct and indirect employment income generated from the realignment is expected to reach $300 million annually. Between 1,280 and 2,185 school age children could accompany relocating personnel, most of whom are expected to attend schools in St. Mary's County. The three school boards of the Tri-County area have stated their willingness to accept increases in student enrollment and have integrated the increase into their schools' planning. In accordance with E.O. 12898 (Environmental Justice), Navy considered potential impacts to minority and low-income persons and concluded that no disproportionate adverse impacts are to be expected.

There are adequate utilities in the region to support the realignment. The realignment is expected to generate a regional increase in groundwater withdrawal of approximately 2.5 percent over current use, which is well within the capacity of the aquifer. Additional wastewater inflows to area treatment facilities are not expected to approach allocated capacities. Regional population growth has been and continues to be expected by community and regional planning organizations. The potential increase in population is within the growth projected for southern Maryland. Some community services such as police and fire protection may need to be expanded to accommodate increases in community populations, however, the realignment is not anticipated to result in a significant burden on these communities.

Questions regarding the Draft and Final Environmental Impact Statements prepared for this action may be directed to: Commanding Officer, Engineering Field Activity Chesapeake, Naval Facilities Engineering Command, Washington Navy Yard, Building 212, 901 M Street SE, Washington DC 20374–2121 (Attn: Mr. Mike Bryan, Code 20N), telephone (202) 685–3061, fax (202) 685–3061.

Dated: January 23, 1995.

Elsie L. Munsell,

Deputy Assistant Secretary of the Navy (Environment and Safety).

[FR Doc. 95–2010 Filed 1–23–95; 8:45 am]

BILLING CODE 3810–FF–P

CNO Executive Panel; Closed Meeting

Pursuant to the provisions of the Federal Advisory Committee Act (5 U.S.C. App. 2), notice is hereby given that the Chief of Naval Operations (CNO) Executive Panel will meet February 16-17, 1995, from 9:00 a.m. to 4:00 p.m., on each day at 4401 Ford Avenue, Alexandria, Virginia. These sessions will be closed to the public.

The purpose of this meeting will be to discuss naval warfare innovations in the areas of tactical innovation, defense application of industrial innovation, and naval support of the land battle. These matters constitute classified information that is specifically authorized by Executive order to be kept secret in the interest of national defense and are, in fact, properly classified pursuant to such Executive order. Accordingly, the Secretary of the Navy has determined in writing that the public interest requires that all sessions of the meeting be closed to the public because they will be concerned with matters listed in section 552b(c)(1) of title 5, United States Code.

For further information concerning this meeting, contact: Timothy J. Galpin, Assistant for CNO Executive Panel Management, 4401 Ford Avenue, Suite 601, Alexandria, VA 22302-0268, Phone: (703) 756-1205.

Dated: January 23, 1995.

L. R. McNees,

LCDR, JAGC, USN, Federal Register Liaison Officer.

[FR Doc. 95–2012 Filed 1–25–95; 8:45 am]

BILLING CODE 3810–FF–F

DEPARTMENT OF EDUCATION

[CFDA No. 252]

Notice Inviting Applications for Designation as an Urban Grant Institution Under the Urban Community Service Program

Purpose: The Urban Community Service Program provides grants to institutions of higher education (IHEs) which have been designated urban grant institutions to devise and implement solutions to pressing and severe urban problems. The purpose of this notice is to invite requests for designation as an urban grant institution. Only IHEs with standing as urban grant institutions are eligible to apply for a grant under the Urban Community Service Program. Institutions seeking designation must submit an application to the Department by the deadline date set forth in this notice. All institutions determined to be eligible in 1992, 1993 or 1994 which intend to apply for a grant must first be re-designated. Once an IHE has been found eligible through this revised designation process, it need not apply for designation again. IHEs with ongoing UCS grants will retain their eligibility until their grants expire and should not apply for re-designation until that time. Requests for designation will be accepted each year. Institutions which for any reason are not named urban grant institutions this year may submit applications for designation in future years. A list of urban grant institutions will be published in the **Federal Register**.

Congress appropriated $13 million for grants in Fiscal Year 1995. The Department will hold a competition for new awards later in the fiscal year. A separate notice inviting applications for grants from designated urban grant institutions will be published shortly which will announce the closing date and other important information concerning grant applications.

Deadline for Transmittal of Applications: March 1, 1995.

Applications Available: January 31, 1995.

Eligibility Information: To qualify as an urban grant institution, an IHE must demonstrate that it meets statutory requirements specified in Title XI, Part A, of the Higher Education Act of 1965,

as amended (HEA). These requirements provide that an eligible applicant be either—

(a) A nonprofit municipal university, established by the governing body of the city in which it is located, and operating as of July 23, 1992; or

(b) An institution of higher education, or a consortium of such institutions any one of which meets all of the following requirements—

(1) *It is located in an urban area*. The term ''urban area'' means—

(i) A metropolitan area having a population of not less than 350,000;

(ii) Two contiguous metropolitan areas having a combined total population of not less than 350,000; or

(iii) In States without an urban area meeting either of the above criteria, the urban area designated by the Secretary.

(2) It draws a substantial portion (at least 40%) of its undergraduate students from the urban area in which it is located or from contiguous areas.

(3) It carries out programs to make postsecondary educational opportunities more accessible to residents of the urban area or contiguous areas.

(4) It has the present capacity to provide resources responsive to the needs and priorities of the urban area and contiguous areas.

(5) It offers a range of professional, technical, or graduate programs sufficient to sustain the capacity of the institution to provide these resources.

(6) It has demonstrated and sustained a sense of responsibility to the urban area and contiguous areas and the people in those areas.

Applicable Regulations: 34 CFR Part 636.

For Applications or Information Contact: Sarah Babson, Division of Higher Education Incentive Programs, U.S. Department of Education, 600 Independence Avenue, S.W., Washington, D.C. 20202–5329. Telephone: (202) 260–3472. You are encouraged to fax your requests for applications to (202) 260–7615. Individuals who use a telecommunications device for the deaf (TDD) may call the Federal Information Relay Service (FIRS) at 1–800–877–8339 between 8 a.m. and 8 p.m., Eastern time, Monday through Friday.

Information about the Department's funding opportunities, including copies of application notices for discretionary grant competitions, can be viewed on the Department's electronic bulletin board (ED Board), telephone (202) 260–9950; or on the Internet Gopher Server at GOPHER.ED.GOV (under Announcements, Bulletins and Press Releases). However, the official application notice for a discretionary grant competition is the notice published in the **Federal Register**.

Program Authority: 20 U.S.C. 1136–1136h.

Dated: January 20, 1995.

David A. Longanecker,

Assistant Secretary for Postsecondary Education.

[FR Doc. 95–2004 Filed 1–25–95; 8:45 am]

BILLING CODE 4000–01–P

DEPARTMENT OF ENERGY

Federal Energy Regulatory Commission

[Docket No. GT95–18–000]

Viking Gas Transmission Company; Proposed Changes in FERC Gas Tariff

January 20, 1995.

Take notice that on January 17, 1995, Viking Gas Transmission Company (Viking), tendered for filing as part of its FERC Gas Tariff, First Revised Volume No. 1, Second Revised Sheet No. 141, Superseding First Revised Sheet No. 141. The proposed effective date is February 1, 1995.

Viking states that the purpose of this filing is to update its Index of Firm Shippers.

Any person desiring to be heard or to protest this filing should file with the Federal Energy Regulatory Commission, 825 North Capitol Street, N.E., Washington, D.C. 20426, a motion to intervene or protest in accordance with the requirements of the Commission's Rules of Practice and Procedure. All such motions or protests should be filed on or before January 27, 1995. All protests filed with the Commission will be considered by it in determining the appropriate action to be taken, but will not serve to make protestants parties to the proceeding. Any person wishing to become a party to a proceeding or to participate as a party in any hearing therein must file a motion to intervene in accordance with the Commission's Rules.

Lois D. Cashell,

Secretary.

[FR Doc. 95–1930 Filed 1–25–95; 8:45 am]

BILLING CODE 6717–01–M

[Docket No. MT95–3–000]

Algonquin LNG, Inc.; Changes In FERC Gas Tariff

January 20, 1995.

Take notice that on January 17, 1995, Algonquin LNG, Inc. (Algonquin LNG), submitted for filing as part of its FERC Gas Tariff, First Revised Volume No. 1, the following revised tariff, sheets effective February 1, 1995:

Second Revised Sheet No. 29
First Revised Sheet No. 81
Second Revised Sheet No. 82

Algonquin LNG states that the purpose of this filing is to add telephone equipment to the list of facilities shared with its marketing affiliate and to reflect a change in the heading of this section in the General Terms and Conditions from ''Order No. 497 Compliance Procedures'' to ''Marketing Affiliate Rule Compliance Procedures.''

Algonquin LNG states that copies of its filing were mailed to all affected customers and interested State Commissions.

Any person desiring to be heard or to protest said filing should file a motion to intervene or protest with the Federal Energy Regulatory Commission, 825 North Capitol Street, NE., Washington, DC 20426, in accordance with 385.214 and 385.211 of the Commission's Rules of Practice and Procedure. All such motions or protests should be filed on or before January 27, 1995. Protests will be considered by the Commission in determining the appropriate action to be taken, but will not serve to make protestants parties to the proceeding. Any person wishing to become a party must file a motion to intervene. Copies of this filing are on file with the Commission and are available for public inspection in the Public Reference Room.

Lois D. Cashell,

Secretary.

[FR Doc. 95–1929 Filed 1–25–95; 8:45 am]

BILLING CODE 6717–01–M

[Docket Nos. RP95–60–000, RP95–60–001, RP92–237–012, RP92–237–013, RP92–237–014, and RP93–198–003]

Alabama-Tennessee Natural Gas Company; Pre-Filing Conference

January 20, 1995.

A pre-filing conference by telephone will be conducted by the Commission Staff on January 31, 1995, at 2 p.m., to address issues concerning a future Alabama-Tennessee filing to recover certain Account No. 191 costs that wre previously rejected by the Commission by a letter order issued on December 30, 1994, in Docket No. RP95–60–000. This conference is being held at the request of Alabama-Tennessee. Docket numbers other than Docket No. RP95–60–000, have been listed because they may relate to the proposed filing. Parties who wish to participate in, or have any questions about, the conference should contact

David Faerberg at (202) 208–1275 by no later than January 30, 1995.

Lois D. Cashell,

Secretary.

[FR Doc. 95–1926 Filed 1–25–95; 8:45 am]

BILLING CODE 6717–01–M

[Docket No. RP95–131–000]

Northern Natural Gas Company; Proposed Changes in FERC Gas Tariff

January 20, 1995.

Take notice that on January 17, 1995, Northern Natural Gas Company (Northern), tendered for filing changes in its FERC Gas Tariff, Fifth Revised Volume No. 1 and Original Volume No. 2. This filing is proposed to be effective February 1, 1995 and March 1, 1995.

Northern states that this filing recognizes that the TOP Surcharge expires and establishes the GSR TI surcharge applicable to TI volumes pursuant to Sections 18 and 25 of the General Terms and Conditions of Northern's Tariff.

Northern states that copies of this filing were served upon the company's customers and interested State Commissions.

Any person desiring to be heard or to protest said filing should file a motion to intervene or protest with the Federal Energy Regulatory Commission, 825 North Capitol Street, N.E., Washington, D.C. 20426, in accordance with §§ 385.214 and 385.211 of the Commission's Rules and Regulations. All such petitions or protests must be filed on or before January 27, 1995. All protests will be considered by the Commission in determining the appropriate action to be taken in this proceeding, but will not serve to make protestant a party to the proceedings. Any person wishing to become a party must file a motion to intervene. Copies of this filing are on file with the Commission and are available for inspection.

Lois D. Cashell,

Secretary.

[FR Doc. 95–1927 Filed 1–25–95; 8:45 am]

BILLING CODE 6717–01–M

[Docket No. RP91–143–029]

Great Lakes Gas Transmission Limited Partnership; Notice of Revenue Sharing Report

January 20, 1995.

Take notice that on January 17, 1995, Great Lakes Gas Transmission Limited Partnership (Great Lakes), filed its Interruptible/Overrun (I/O) Revenue Sharing Report with the Federal Energy Regulatory Commission (Commission) in accordance with the Stipulation and Agreement (Settlement) filed on September 24, 1992, and approved by the Commission's February 3, 1993, order issued in Docket No. RP91–143–000, et al.

Great Lakes states that this report reflects application of the revenue sharing mechanism and remittances made to firm shippers for I/O revenue collected for the November 1, 1993 through October 31, 1994 period, in accordance with Article IV of the Settlement. Such remittances, totaling $1,712,194, were made to Great Lakes' firm shippers on December 20, 1994. The amounts remitted are subject to adjustment at a future date in accordance with Articles III and V of the Settlement because the ratemaking methodology resulting from the implementation of Opinion Nos. 367, 367–A, 368, 368–A and related orders, is subject to Commission action on remand, judicial review, and the outcome of the current proceeding before the Presiding Administrative Law Judge.

Great Lakes states that copies of the report were sent to the Public Service Commissions of Minnesota, Wisconsin and Michigan and the parties to this proceeding.

Any person desiring to protest said filing should file a protest with the Federal Energy Regulatory Commission, 825 North Capitol Street, N.E. Washington, D.C. 20426, in accordance with Rule 211 of the Commission's Rules of Practice and Procedure 18 CFR 385.211. All such protests should be filed on or before January 27, 1995. Protests will be considered by the Commission in determining the appropriate action to be taken, but will not serve to make protestants parties to the proceeding. Copies of this filing are on file with the Commission and are available for public inspection.

Lois D. Cashell,

Secretary.

[FR Doc. 95–1923 Filed 1–25–95; 8:45 am]

BILLING CODE 6717–01–M

Arkansas Oklahoma Gas Corporation; Notice of Petition for Rate Approval

January 20, 1995.

Take notice that on January 11, 1995, Arkansas Oklahoma Gas Corporation (AOG), filed pursuant to § 284.123(b)(2) of the Commission's Regulations, a petition for rate approval requesting that the Commission approve as fair and equitable a rate of $0.2329 per MMBtu plus 2.766 percent for company use and lost and unaccounted for gas for transportation services performed under Section 311(a)(2) of the Natural Gas Policy Act of 1978 (NGPA).

AOG states that it is a natural gas distribution company which owns and operates natural gas gathering, transmission, and distribution systems in the Arkansas and Oklahoma. AOG performs Section 311 transportation service under an Order No. 63 blanket certificate.[1] AOG proposes an effective date of January 11, 1995.

Pursuant to § 282.123(b)(2)(ii), if the Commission does not act within 150 days of the filing date, the rate will be deemed to be fair and equitable and not in excess of an amount which interstate pipelines would be permitted to charge for similar transportation service. The Commission may, prior to the expiration of the 150-day period, extend the time for action or institute a proceeding to afford parties an opportunity for written comments and for the oral presentation of views, data, and arguments.

Any person desiring to participate in this rate proceeding must file a motion to intervene in accordance with §§ 385.211 and 385.214 of the Commission's Rules of Practice and Procedures. All motions must be filed with the Secretary of the Commission on or before February 3, 1995. The petition for rate approval is on file with the Commission and is available for public inspection.

Lois D. Cashell,

Secretary.

[FR Doc. 95–1922 Filed 1–25–95; 8:45 am]

BILLING CODE 6717–01–M

[Docket No. RP94–96–000, et al.]

CNG Transmission Corporation; Notice of Informal Settlement Conference

January 20, 1995.

Take notice that an informal settlement conference will be convened in these proceedings on Thursday, January 26, 1995, at 10:00 a.m. at the offices of the Federal Energy Regulatory Commission, 810 First Street NE., Washington, DC 20426, for the purpose of exploring the possible settlement of the issues in these proceedings.

Any party, as defined by 18 CFR 385.102(c), or any participant as defined by 18 CFR 385.102(b) is invited to attend. Persons wishing to become a party must move to intervene and receive intervenor status pursuant to the Commission's regulations (18 CFR 385.214).

---

[1] Docket No. CP85–535–000, 33 FERC ¶ 61,197 (1985).

For additional information, contact David R. Cain at (202) 208–0909 or Neil L. Levy at (202) 208–0909.

Lois D. Cashell,

Secretary.

[FR Doc. 95–1924 Filed 1–25–95; 8:45 am]

BILLING CODE 6717–01–M

[Docket No. MT95–4–000]

Algonquin Gas Transmission Company; Changes in FERC Gas Tariff

January 20, 1995.

Take notice that on January 17, 1995, Algonquin Gas Transmission Company (Algonquin), submitted for filing as part of its FERC Gas Tariff, Fourth Revised Volume No. 1, effective February 1, 1995, the following revised tariff sheets:

Second Revised Sheet No. 600
Second Revised Sheet No. 707

Algonquin states that the purpose of this filing is to add telephone equipment to the list of facilities shared with its marketing affiliate and to reflect a change in the heading of this section in the General Terms and Conditions from ''Order No. 497 Compliance Procedures'' to ''Marketing Affiliate Rule Compliance Procedures.''

Algonquin states that copies of its filing were mailed to all affected customers and interested State Commissions.

Any person desiring to be heard or to protest said filing should file a motion to intervene or protest with the Federal Energy Regulatory Commission, 825 North Capitol Street, N.E., Washington, D.C. 20426, in accordance with §§ 385.214 and 385.211 of the Commission's Rules of Practice and Procedure. All such motions or protests should be filed on or before January 27, 1995. Protests will be considered by the Commission in determining the appropriate action to be taken, but will not serve to make protestants parties to the proceeding. Any person wishing to become a party must file a motion to intervene. Copies of this filing are on file with the Commission and are available for public inspection in the Public Reference Room.

Lois D. Cashell,

Secretary.

[FR Doc. 95–1928 Filed 1–25–95; 8:45 am]

BILLING CODE 6717–01–M

[Docket No. ER95–403–000, et al.]

Northern States Power Company (MN), et al.; Electric Rate and Corporate Regulation Filings

January 19, 1995.

Take notice that the following filings have been made with the Commission:

1. Northern States Power Company (Minnesota)

[Docket No. ER95–403–000]

Take notice that on January 9, 1995, Northern States Power Company (Minnesota) (NSP), tendered for filing an amended Service Schedule E to the Municipal Interconnection and Interchange Agreement between NSP and the City of Ada (City). Service Schedule E provides for distribution facilities services for the City, and the amended Service Schedule E modifies the monthly facilities charge to be paid by the City.

NSP requests that the Commission alternatively disclaim jurisdiction or accept the amended Service Schedule E of the Municipal Interconnection and Interchange Agreement effective March 20, 1995.

Comment date: February 2, 1995, in accordance with Standard Paragraph E at the end of this notice.

2. Florida Power & Light Co.

[Docket No. ER95–404–000]

Take notice that on January 9, 1995, Florida Power & Light Company (FPL), tendered for filing Amendment Number Five to the Revised and Restated Transmission Agreement Between Florida Power & Light Company and Florida Municipal Power Agency dated January 6, 1995. FPL requests that Amendment No. 5 be permitted to become effective on January 9, 1995, or as soon thereafter as practicable. FPL states that this filing is in accordance with Part 35 of the Commission's Regulations.

Comment date: February 2, 1995, in accordance with Standard Paragraph E at the end of this notice.

3. The Toledo Edison Co.

[Docket No. ER95–405–000]

Take notice that on January 9, 1995, The Toledo Edison Company (Toledo Edison), tendered for filing a revision to the Resale Service Rate Agreement between Toledo Edison and Southeastern Michigan Rural Electric Cooperative (Southeastern Michigan), which was effective for service rendered by Toledo Edison to Southeastern Michigan from January 1, 1995.

Toledo Edison states that Southeastern Michigan presently purchases firm power under its FERC Electric Tariff No. 33 which terminates under its own provisions on December 31, 1994. Under the Resale Service Rate Agreement, Toledo Edison will continue to sell to Southeastern Michigan all of the power and energy needed by Southeastern Michigan to serve its requirements.

Toledo Edison states that the rate set forth in the Resale Service Rate Agreement is a negotiated rate between Toledo Edison and Southeastern Michigan. Toledo Edison states that the Resale Service Rate Agreement will help Southeastern Michigan become competitive in its source of power.

Comment date: February 1, 1995, in accordance with Standard Paragraph E at the end of this notice.

4. Washington Power Co., L.P.

[Docket No. QF88–20–002]

On January 13, 1995, Washington Power Company, L.P. (Washington Power), c/o of Washington Power (I), Inc. of 7201 Hamilton Boulevard, Allentown, Pennsylvania 18195–1505, submitted for filing an application for recertification of a facility as a qualifying cogeneration facility pursuant to Section 292.207(b) of the Commission's Regulations. No determination has been made that the submittal constitutes a complete filing.

According to the applicant, the natural gas-fueled cogeneration facility is located in Washington County, Pennsylvania. The Commission previously certified the capacity of the facility to be 80 MW. The facility will consist of two circulating fluidized bed boilers, an extraction/condensing steam turbine generator, and a 3/4 mile 138 Kv transmission line. Thermal energy recovered from the facility will be used to recover carbon dioxide. The instant application for recertification was submitted to report an increase in capacity to 85 MW, a change in ownership structure and addition of the above mentioned transmission line.

Comment date: Thirty days from the date of publication of this notice in the **Federal Register**, in accordance with Standard Paragraph E at the end of this notice.

5. Praxair, Inc. and Rohm and Haas Texas Inc.

[Docket No. QF95–34–000]

On January 11, 1995, Praxair, Inc. and Rohm and Haas Texas Inc. tendered for filing an amendment to its December 7, 1994, filing in this docket.

The amendment pertains to technical requirements and the ownership structure of the cogeneration facility. No

determination has been made that the submittal constitutes a complete filing.

Comment date: February 8, 1995, in accordance with Standard Paragraph E at the end of this notice.

Standard Paragraphs

E. Any person desiring to be heard or to protest said filing should file a motion to intervene or protest with the Federal Energy Regulatory Commission, 825 North Capitol Street, N.E., Washington, D.C. 20426, in accordance with Rules 211 and 214 of the Commission's Rules of Practice and Procedure (18 CFR 385.211 and 18 CFR 385.214). All such motions or protests should be filed on or before the comment date. Protests will be considered by the Commission in determining the appropriate action to be taken, but will not serve to make protestants parties to the proceeding. Any person wishing to become a party must file a motion to intervene. Copies of this filing are on file with the Commission and are available for public inspection.

Lois D. Cashell,

Secretary.

[FR Doc. 95–1957 Filed 1–25–95; 8:45 am]

BILLING CODE 6717–01–P

[Project No. 7888–006 Vermont]

Comtu Falls Associates; Notice of Availability of Draft Environmental Assessment

January 20, 1995.

In accordance with the National Environmental Policy Act of 1969 and the Federal Energy Regulatory Commission's (Commission's) regulations 18 CFR Part 380 (Order 486, 52 FR 47897), the Office of Hydropower Licensing has reviewed the down stream fish passage plan for the Comtu Falls Project, located on the Black River, in Windsor County, Vermont, and has prepared a Draft Environmental Assessment (DEA). In the DEA, the Commission staff analyzed the potential impacts and benefits from the licensee's proposed fish passage plan, the no-action alternative and a Commission staff alternative. The Commission staff determined that either the licensee's proposed plan or staff's alternative would provide the intended benefits to the fish resources of the Black River, with the Commission staff's plan being less costly. The Commission staff concluded that approval of either downstream fish passage plan would not constitute a major Federal action significantly affecting the quality of the human environment.

Copies of the DEA are available for review in the Public Reference Branch, Room 3104, of the Commission's offices at 941 North Capitol Street, NE., Washington, DC 20426.

Please submit any comments within 30 days from the date of this notice. Any comments, conclusions, or recommendations that draw upon studies, reports, or other working papers of substance should be supported by appropriate documentation.

Comments should be addressed to Lois D. Cashell, Secretary, Federal Energy Regulatory Commission, 825 North Capitol Street NE., Washington, DC 20426. Please affix Project No. 7888–006 to all comments. For Further information, please contact Robert Grieve at (202) 219–265.

Lois D. Cashell,

Secretary.

[FR Doc. 95–1955 Filed 1–25–95; 8:45 am]

BILLING CODE 6717–01–M

[Docket No. CP93–685–001, et al.]

Tuscarora Gas Transmission Company, et al.; Natural Gas Certificate Filings

January 18, 1995.

Take notice that the following filings have been made with the Commission:

1. Tuscarora Gas Transmission Company

[Docket No. CP93–685–001]

Take notice that on January 12, 1995, Tuscarora Gas Transmission Company (Tuscarora), 6100 Neil Road, P.O. Box 30150, Reno, Nevada 89520–3057, filed in Docket No. CP93–685–001, pursuant to Section 7(c) of the Natural Gas Act, seeking to amend its application filed in Docket No. CP93–685–000 on August 27, 1993. In that application Tuscarora requested authorization to: (1) Construct, own, and operate a new 229-mile, 20-inch diameter natural gas pipeline extending from an interconnection with Pacific Gas Transmission Company (PGT) near Malin, Oregon to the Tracy Power Plant owned by Sierra Pacific Power Company in Storey County, Nevada, (2) transport natural gas on an open access, self implementing basis, with pregranted abandonment authority, and (3) construct, own, operate, and abandon certain facilities on a self-implementing basis. In its amendment, Tuscarora seeks to: (1) modify its pipe specifications and flow studies; (2) reduce its proposed rates; (3) change its proposed tariff; (4) revise exhibits regarding officers and subsidiaries and affiliates; and (5) incorporate those portions of Tuscarora's letter filed on November 18, 1994, which provides additional information regarding the status of regulatory and upstream transportation matters and the changes required as a result of the environmental review process; all as more fully set forth in the amendment which is on file with the Commission and is open to public inspection.

Tuscarora also requested that the Commission issue a preliminary determination on non-environmental issues.

Tuscarora says that upon analysis of pipe manufacturer's bids after completion of the projects detailed design phase it determined that it would benefit the project to change the specifications for pipe to be used in locations designated as Class 1 and Class 2 under the Department of Transportation's Minimum Federal Safety Standards. Tuscarora says that the proposed changes will not change the cost of the project and will have little impact on the flow characteristics of the pipeline.

Tuscarora proposes to reduce its proposed initial transportation rates as a result of two changes in Tuscarora's rate methodology: a lowering of the return on equity component used in calculating the rates from 13.5% to 13.0% and the use of levelized rates for the first five years of Tuscarora's operation. Tuscarora also proposes to modify the portions of its tariff that set out the proposed rates, prescribe uniform gas-usage, permit assignability, and establish forms of firm transportation agreements.

Comment date: February 8, 1995, in accordance with the first paragraph of Standard Paragraph F at the end of this notice.

2. Natural Gas Pipeline Company of America; Columbia Gulf Transmission Company; Tennessee Gas Pipeline Company

[Docket No. CP95–151–000]

Take notice that on January 11, 1995, Natural Gas Pipeline Company of America (Natural), 701 East 22nd Street, Lombard, Illinois 60148; Columbia Gulf Transmission Company (Columbia Gulf), P.O. Box 1273, Charleston, West Virginia 25325–1273; and Tennessee Gas Pipeline Company (Tennessee), P.O. Box 2511, Houston, Texas 77252–2511, filed a joint application with the Commission in Docket No. CP95–151–000 pursuant to Section 7(b) of the Natural Gas Act (NGA) for permission and approval to abandon five separate exchange services which were authorized in Docket Nos. CP72–295, CP73–177, CP73–182, CP74–204, as

amended, CP77–327, and CP79–249, all as more fully set forth in the application which is open to the public for inspection.

The parties propose to abandon the following five exchange services:

1. An exchange service between Natural, Columbia Gulf, and Tennessee performed under Natural's FERC Rate Schedule X–33, Columbia Gulf's FERC Rate Schedule X–14, and Tennessee's FERC Rate Schedule X–39, jointly authorized in Docket No. CP72–295; [1]

2. An exchange service between Natural and Tennessee performed under Natural's Rate Schedule X–37 and Tennessee's FERC Rate Schedule X–38 authorized in Natural's Docket No. CP73–177 and Tennessee's Docket No. CP73–182; [2]

3. An exchange service between Natural and Columbia Gulf performed under Natural's Rate Schedule X–61 and Columbia Gulf's Rate Schedules X–22, X–24, and X–47, jointly authorized in Docket No. CP74–204; [3]

4. An exchange service between Natural, Columbia Gulf, and Tennessee performed under Natural's Rate Schedule X–87, Columbia Gulf's Rate Schedule X–33, and Tennessee's Rate Schedule X–54, jointly authorized in Docket No. CP77–327; [4] and,

5. An exchange service between Natural and Columbia Gulf, jointly authorized in Docket No. CP79–249, [5] performed under Columbia Gulf's Rate Schedule X–64, but to which Natural inadvertently did not file a rate schedule,

Comment date: February 8, 1995, in accordance with Standard Paragraph F at the end of this notice.

3. Texas Gas Transmission Corporation

[Docket No. CP95–157–000]

Take notice that on January 13, 1995, Texas Gas Transmission Corporation (Texas Gas), P.O. Box 1160, Owensboro, Kentucky, 42302, filed in Docket No. CP95–157–000 a request pursuant to §§ 157.205 and 157.216 of the Commission's Regulations under the Natural Gas Act (18 CFR 157.205, 157.216) for authorization to abandon a delivery tap in Phillips County, Arkansas, under Texas Gas' blanket certificate issued in Docket No. CP82–407–000, pursuant to Section 7 of the Natural Gas Act, all as more fully set forth in the request that is on file with the Commission and open to public inspection.

Texas Gas proposes to abandon by removal the Nitrogen Products—Helena delivery tap, which is located on Texas Gas' Helena 12′ pipeline in Phillips County. The tap was installed to deliver gas transported by Texas Gas to Nitrogen Products Incorporated's (Nitrogen Products) plant at Helena, Arkansas. It is asserted that Nitrogen Products has notified Texas Gas that it no longer requires deliveries because Nitrogen Products is selling the plant and the facilities are being dismantled.

Comment date: March 6, 1995, in accordance with Standard Paragraph G at the end of this notice.

Standard Paragraphs

F. Any person desiring to be heard or to make any protest with reference to said application should on or before the comment date, file with the Federal Energy Regulatory Commission, Washington, DC 20426, a motion to intervene or a protest in accordance with the requirements of the Commission's Rules of Practice and Procedure (18 CFR 385.214 or 385.211) and the Regulations under the Natural Gas Act (18 CFR 157.10). All protests filed with the Commission will be considered by it in determining the appropriate action to be taken but will not serve to make the protestants parties to the proceeding. Any person wishing to become a party to a proceeding or to participate as a party in any hearing therein must file a motion to intervene in accordance with the Commission's Rules.

Take further notice that, pursuant to the authority contained in and subject to the jurisdiction conferred upon the Federal Energy Regulatory Commission by Sections 7 and 15 of the Natural Gas Act and the Commission's Rules of Practice and Procedure, a hearing will be held without further notice before the Commission or its designee on this application if no motion to intervene is filed within the time required herein, if the Commission on its own review of the matter finds that a grant of the certificate and/or permission and approval for the proposed abandonment are required by the public convenience and necessity. If a motion for leave to intervene is timely filed, or if the Commission on its own motion believes that a formal hearing is required, further notice of such hearing will be duly given.

Under the procedure herein provided for, unless otherwise advised, it will be unnecessary for applicant to appear or be represented at the hearing.

G. Any person or the Commission's staff may, within 45 days after issuance of the instant notice by the Commission, file pursuant to Rule 214 of the Commission's Procedural Rules (18 CFR 385.214) a motion to intervene or notice of intervention and pursuant to § 157.205 of the Regulations under the Natural Gas Act (18 CFR 157.205) a protest to the request. If no protest is filed within the time allowed therefor, the proposed activity shall be deemed to be authorized effective the day after the time allowed for filing a protest. If a protest is filed and not withdrawn within 30 days after the time allowed for filing a protest, the instant request shall be treated as an application for authorization pursuant to Section 7 of the Natural Gas Act.

Lois D. Cashell,

Secretary.

[FR Doc. 95–1931 Filed 1–25–95; 8:45 am]

BILLING CODE 6717–01–P

[Docket No. CP95–152–000, et al.]

Natural Gas Pipeline Company of America, et al.; Natural Gas Certificate Filings

January 19, 1995.

Take notice that the following filings have been made with the Commission:

1. Natural Gas Pipeline Company of America

[Docket No. CP95–152–000]

Take notice that on January 11, 1995, Natural Gas Pipeline Company of America (Natural), 701 East 22nd Street, Lombard, Illinois 60148, filed an application pursuant to Section 7(b) of the Natural Gas Act for permission and approval to abandon, by sale to MidCon Texas Pipeline Corp (MidCon Texas), an intrastate pipeline and affiliate, the Willamar Facilities, all as more fully set forth in the application which is on file with the Commission and open to public inspection.

---

[1] 49 FPC 1002 (1973).

[2] The Commission concurrently granted authorization to Exxon Corporation in Docket No. CI73–410, to Natural in Docket No. CP73–177, and to Tennessee in Docket No. CP73–182 on April 5, 1973. (Not cited in the Federal Power Commission reports).

[3] Temporary order issued January 10, 1975, and amended on July 3, 1975; permanent order issued at 57 FPC 1270 (1977), as amended at 1 FERC ¶ 61,178 (1977); 3 FERC ¶ 61,062 (1978); 3 FERC ¶ 61,292 (1978); 9 FERC ¶ 62,199 (1979); 11 FERC ¶ 62,078; and 37 FERC ¶ 62,166 (1986).

[4] Temporary order issued on May 31, 1977, and permanent order issued at 58 FPC 2819 (1977).

[5] 8 FERC ¶ 61,094 (1979).

Transwestern states that the Willamar Facilities consist of following facilities:

Lateral name	Description
16-in Willamar Lateral	—42.61 miles of 16-inch lateral—one 10-inch sidetap—Jim Wells, Brooks and Kenedy Counties, Texas.
12-in Willamar Lateral	—30.29 miles of 12-inch lateral—Dual 6-inch meter stations—Dual 8-inch meter stations—Kenedy & Willacy Counties, Texas.
Encinitas Lateral	—17.11 miles of 8-inch lateral—one 6-inch sidetap—Dual 4-inch meter stations—Brooks County, Texas.
Sal del Rey Lateral	—14.19 miles of 10-inch lateral—one 8-inch sidetap—Dual 6-inch meter stations—Kenedy & Hidalgo Counties, Texas.
Santa Fe Lateral	—5.15 miles of 8-inch lateral—one 6-inch sidetap—one meter station—Brooks County, Texas.
Nile Lateral	—1.52 miles of 4-inch lateral—one 4-inch sidetap—one meter station—Willacy County, Texas.
Raymondville Lateral	—0.85 mile of 4-inch lateral—one 4-inch sidetap—one meter station—Willacy County, Texas.
Tennessee Gas Facilities	—one 4-inch sidetap—Brooks County, Texas.
North Willamar Lateral	—2.27 miles of 4-inch lateral—one 3-inch sidetap—one meter station—Willacy County, Texas.
Sal del Rey No. 2 Lateral	—0.37 miles of 3-inch lateral—one 3-inch sidetap—one meter station—Hidalgo County, Texas.

As a result of Order No. 636, Natural states that it no longer provides bundled sales service and thus no longer has any need to utilize the Willamar Facilities to receive gas purchased by Natural for its system supply. Natural states that, over the years, the volumes of gas that are connected to the Willamar Facilities have declined so that currently, given the operating pressures on Natural's system, there are only approximately 5,000 MMBtu per day available to be transported by Natural.

According to Natural, MidCon Texas has identified additional opportunities to utilize the Willamar Facilities in the sense of providing intrastate transportation service for gas supplies not currently attached to these facilities. It is stated that MidCon has advised Natural that some of these intrastate opportunities would need to be provided at rates that could be below Natural's minimum rates (taking into account the ACA charge and the costs associated with the reimbursement of fuel and gas lost and unaccounted for, as well as Natural's transportation rates). It is further stated that, thus, these opportunities would not be available to Natural if it retained the Willamar Facilities.

Natural states that it has entered into an agreement to transfer the Willamar Facilities to MidCon Texas, at net book value as of the Closing Date under the agreement. It is stated that as of November 30, 1994, the net book value was $1,064,632. Natural states that a portion of the facilities are being rehabbed during the first quarter of 1995 under Section 2.55(b) of the Commission's regulations. Natural states that the net book value shown here does not include the cost of such rehab work, but the amount to be paid by MidCon Texas will include that cost.

Natural contends that it is arranging for alternative primary points of receipt for any of its shippers receiving service under firm transportation agreements with primary receipt points on the Willamar Facilities. It is stated that MidCon Texas provides open access transportation under Section 311(a)(2) of the NGPA, in addition to intrastate transportation, and will continue to provide transportation service to the producers currently connected to the Willamar Facilities and deliver the gas back to Natural for further transportation.

Natural states that MidCon Texas has advised that one of its prospective new customers has requested that MidCon Texas be ready to commence intrastate transportation services for new production that would be attached to the Willamar Facilities by May 15, 1995, subject to Natural's receipt of abandonment authorization. Therefore, Natural requests that the Commission act on its application by May 1, 1995, or as soon thereafter as possible, in order to allow sufficient time to complete the necessary paperwork to transfer the facilities by May 15, 1995.

Comment date: February 9, 1995, in accordance with Standard Paragraph F at the end of this notice.

2. Transwestern Pipeline Company

[Docket No. CP95–153–000]

Take notice that on January 12, 1995, Transwestern Pipeline Company (Transwestern), 1400 Smith Street, Post Office Box 1188, Houston, Texas 77251–1188 filed an application pursuant to Section 7(b) of the Natural Gas Act for permission and approval to abandon by sale to GPM Gas Corporation (GPM) certain portions of Transwestern's Brillhart and Kiowa Creek gathering systems, including small diameter gathering pipeline and measurement facilities and requests that the Commission authorize the proposed accounting treatment in accordance with the Commission's Gas Plant Instruction No. 5 of the Uniform System of Accounts, all as more fully set forth in the application which is on file with the Commission and open to public inspection.

Transwestern states that under the terms of a January 10, 1995, Purchase and Sale Agreement (Sale Agreement) Transwestern agreed to sell the subject facilities to GPM for a price of $250,000. Transwestern states that it has agreed to sell to GPM a portion of its Brillhart gathering facilities in Hansford County, Texas, consisting of approximately seven miles of 4 to 8-inch pipelines and eight meter stations. It is stated that the subject Brillhart facilities were initially constructed and certificated in Docket No. CP69–102 and additional facilities were subsequently built to attach gas wells under various dockets.

In addition, Transwestern states that it proposes to sell to GPM a portion of its Kiowa Creek gathering facilities in Lipscomb County, Texas, which consists of approximately one mile of 4-inch pipeline and two meter stations. It is stated that Transwestern was granted certificate authority in Docket No. CP62–160 to construct the pipeline and one meter station to connect the Meier No. 1 well to Transwestern's pipeline system. In Docket No. CP78–62, Transwestern submits that it was granted certificate authority to construct the pipeline and one meter station to connect the Meier No. 2 well to Transwestern's system. Transwestern contends that both Meier wells are now split connected and flowing to GPM's gathering system. Also, it is stated that a small field compressor unit, the Meier Cruise Unit No. 813, was installed on the Kiowa Creek 4-inch lateral under Docket No. CP73–337 to allow the low pressure Meier wells to flow into the Kiowa Creek 6-inch lateral. It is stated that the Meier Cruise Compressor Unit No. 813 is included in Transwestern's abandonment application in Docket No. CP94–751–000, and is not subject to the

Sales Agreement. Transwestern submits that it desires to sell such facilities to GPM because the gas wells attached to these gathering laterals are now dedicated and flowing to GPM's gathering systems and no longer flow through its system.

Transwestern states that GPM has informed it that GPM has executed a 10-year purchase contract on all production from the gas wells flowing into Transwestern's laterals, which are the subject of the Sales Agreement. Transwestern states that it is currently providing an interruptible transportation service for GPM and is redelivering volumes from the wells to interconnects with GPM located on certain of the subject laterals.

Transwestern states that its Exhibit Y proposes to account for the abandonment by sale of the Brillhart and Kiowa Creek gathering systems to GPM as a disposition of an operating unit or system(s) under Gas Plant Instruction No. 5, Gas Plant Purchased or Sold, (GPI 5) of the Uniform System of Accounts. It is stated that GPI 5 requires that : (i) the original cost of the facilities sold be removed from Account No. 101, Gas Plant in Service; (ii) the related accumulated provision for depreciation be removed from Account No. 108; and (iii) the resultant gain or loss be recorded in Account No. 421.1, Gain on Disposition of Property, or Account No, 421.2, Loss on Disposition of Property, as appropriate. It is stated that GPI 5 also requires that a disposition of an operating unit or system be recorded through Account No. 102, Gas Plant Purchased or Sold.

Therefore, in compliance with the Commission's Rules and Regulations, Transwestern states that it shall account for the sale of the Brillhart and Kiowa Creek gathering facilities as a gain on the disposition of facilities in accordance with GPI 5.

Comment date: February 9, 1995, in accordance with Standard Paragraph F at the end of this notice.

3. Florida Gas Transmission Company

[Docket No. CP95–155–000]

Take notice that on January 13, 1995, Florida Gas Transmission Company (FGT), 1400 Smith Street, Houston, Texas 77002, filed a request with the Commission in Docket No. CP95–155–000, pursuant to §§ 157.205(b) and 157.212 of the Commission's Regulations under the Natural Gas Act (NGA) (18 CFR 157.205(b) and 157.212) and under FGT's blanket certificate issued in Docket No. CP82–553–000 pursuant to Section 7(c) of the NGA, for authorization to operate an existing meter station initially constructed under Section 311(a) of the Natural Gas Policy Act of 1978 (NGPA), as a jurisdictional facility, all as more fully set forth in the request on file with the Commission and open to public inspection.

FGT states that it proposes to operate the Lake Blue Meter Station located in Polk County, Florida as a jurisdictional facility for the purpose of transporting and delivering natural gas under Part 284 of the Commission's Regulations. FGT further states that the meter station is serving as a delivery point to Peoples Gas System, Inc. under an existing firm transportation service agreement pursuant to FGT's Rate Schedule FTS–1.

FGT further states that the present and proposed gas quantities for transportation and delivery to Peoples by FGT are 30,300 MMBtu daily and 11,059,500 MMBtu annually.

Comment date: March 6, 1995, in accordance with Standard Paragraph G at the end of this notice.

Standard Paragraphs

F. Any person desiring to be heard or to make any protest with reference to said application should on or before the comment date, file with the Federal Energy Regulatory Commission, Washington, DC 20426, a motion to intervene or a protest in accordance with the requirements of the Commission's Rules of Practice and Procedure (18 CFR 385.214 or 385.211) and the Regulations under the Natural Gas Act (18 CFR 157.10). All protests filed with the Commission will be considered by it in determining the appropriate action to be taken but will not serve to make the protestants parties to the proceeding. Any person wishing to become a party to a proceeding or to participate as a party in any hearing therein must file a motion to intervene in accordance with the Commission's Rules.

Take further notice that, pursuant to the authority contained in and subject to the jurisdiction conferred upon the Federal Energy Regulatory Commission by Sections 7 and 15 of the Natural Gas Act and the Commission's Rules of Practice and Procedure, a hearing will be held without further notice before the Commission or its designee on this application if no motion to intervene is filed within the time required herein, if the Commission on its own review of the matter finds that a grant of the certificate and/or permission and approval for the proposed abandonment are required by the public convenience and necessity. If a motion for leave to intervene is timely filed, or if the Commission on its own motion believes that a formal hearing is required, further notice of such hearing will be duly given.

Under the procedure herein provided for, unless otherwise advised, it will be unnecessary for applicant to appear or be represented at the hearing.

G. Any person or the Commission's staff may, within 45 days after issuance of the instant notice by the Commission, file pursuant to Rule 214 of the Commission's Procedural Rules (18 CFR 385.214) a motion to intervene or notice of intervention and pursuant to § 157.205 of the Regulations under the Natural Gas Act (18 CFR 157.205) a protest to the request. If no protest is filed within the time allowed therefor, the proposed activity shall be deemed to be authorized effective the day after the time allowed for filing a protest. If a protest is filed and not withdrawn within 30 days after the time allowed for filing a protest, the instant request shall be treated as an application for authorization pursuant to Section 7 of the Natural Gas Act.

Lois D. Cashell,

Secretary,

[FR Doc. 95–1956 Filed 1–25–95; 8:45 am]

BILLING CODE 6717–01–P

ENVIRONMENTAL PROTECTION AGENCY

[FRL–5145–2]

The Procter & Gamble Paper Products de Minimis Settlement; Proposed Administrative Settlement Under the Comprehensive Environmental Response, Compensation and Liability Act

AGENCY: United States Environmental Protection Agency.

ACTION: Request for Public Comment.

SUMMARY: The United States Environmental Protection Agency (''EPA'') is proposing to enter into a *de minimis* settlement pursuant to Section 122(g)(4) of the Comprehensive Environmental Response, Compensation, and Liability Act of 1980, as amended, (''CERCLA''), 42 U.S.C. § 9622(g)(4). This proposed settlement is intended to resolve the liabilities under CERCLA of the Procter & Gamble Paper Products Company (''Procter & Gamble'') for response costs addressed in the settlement which were incurred or may be incurred by the United States Environmental Protection Agency at the Bell Landfill Superfund Site, Bradford County, Pennsylvania.

DATES: Comments must be provided on or before February 27, 1995.

ADDRESS: Comments should be addressed to the Docket Clerk, United States Environmental Protection Agency, Region III, 841 Chestnut Building, Philadelphia, Pennsylvania, 19107, and should refer to: In the Matter of Bell Landfill Superfund Site, Terry Township, Bradford County, Pennsylvania, U.S. EPA Docket No. III 94–51–DC.

FOR ADDITIONAL INFORMATION CONTACT: Eric D. Ashton (215) 597–9387, United States Environmental Protection Agency, Region III, Office of Regional Counsel (3RC23), 841 Chestnut Building, Philadelphia, Pennsylvania 19107, and should refer to: In the Matter of the Bell Landfill Superfund Site, Terry Township, Bradford County, Pennsylvania, U.S. EPA Docket No. III–94–51–DC.

NOTICE OF DE MINIMIS SETTLEMENT: In accordance with Section 122(i)(1) of CERCLA, 42 U.S.C. § 9622(i)(1), notice is hereby given of a proposed administrative settlement with Procter & Gamble concerning the Bell Landfill Site in Bradford County, Pennsylvania. The administrative settlement was signed by the United States Environmental Protection Agency, Region III's Regional Administrator on September 30, 1994 and subject to review by the public pursuant to this Notice. The agreement is also subject to the approval of the Attorney General, United States Department of Justice or her designee.

Procter & Gamble has agreed to pay $6,000.00 to the United States Environmental Protection Agency subject to the contingency that the EPA may elect not to complete the settlement based on matters brought to its attention during the public comment period established by this Notice.

EPA is entering into this agreement under the authority of Sections 122(g) and 107 of CERCLA, 42 U.S.C. §§ 9622(g) and 9607. Section 122(g) of CERCLA, 42 U.S.C. § 9622(g), authorizes early settlements with de minimis parties to allow them to resolve their liabilities under, inter alia, Section 107 of CERCLA, 42 U.S.C. § 9607, to reimburse the United States for response costs incurred in cleaning up Superfund sites without incurring substantial transaction costs. Under this authority EPA proposes to settle with Procter & Gamble at the Bell Landfill Site.

The Environmental Protection Agency will receive written comments to this proposed administrative settlement for thirty (30) days from the date of publication of this Notice. A copy of the proposed Administrative Order on Consent can be obtained from the Environmental Protection Agency, Region III, Office of Regional Counsel (3RC23), 841 Chestnut Building, Philadelphia, Pennsylvania 19107 by contacting Eric D. Ashton, Assistant Regional Counsel, at (215) 597–9387.

Dated: September 29, 1994.

W.T. Wisniewski,

Acting Regional Administrator, EPA, Region III.

[FR Doc. 95–2011 Filed 1–25–95; 8:45 am]

BILLING CODE 6560–50–P

FEDERAL MARITIME COMMISSION

Security for the Protection of the Public Indemnification of Passengers for Nonperformance of Transportation; Notice of Issuance of Certificate (Performance)

Notice is hereby given that the following have been issued a Certificate of Financial Responsibility for Indemnification of passengers for Nonperformance of Transportation pursuant to the provisions of Section 3, Public Law 89–777 (46 U.S.C. § 817(e)) and the Federal Maritime Commission's implementing regulations at 46 CFR Part 540, as amended:

Starlauro S.p.A. and MSC Mediterranean Shipping Company S.A., 420 Fifth Avenue, New York, N.Y. 10018

Vessel: MONTEREY

Dated: January 20, 1995.

Joseph C. Polking,

Secretary.

[FR Doc. 95–1942 Filed 1–25–95; 8:45 am]

BILLING CODE 6730–01–M

Security for the Protection of the Public Financial Responsibility to Meet Liability Incurred for Death or Injury to Passengers or Other Persons on Voyages; Notice of Issuance of Certificate (Casualty)

Notice is hereby given that the following have been issued a Certificate of Financial Responsibility to Meet Liability Incurred for Death or Injury to Passengers or Other Persons on Voyages pursuant to the provisions of Section 2, Public Law 89–777 (46 U.S.C. § 817(d)) and the Federal Maritime Commission's implementing regulations at 46 CFR, Part 540, as amended:

Starlauro S.p.A., MSC Mediterranean Shipping Company S.A. and Compania Naviera Panocean S.A., 420 Fifth Avenue, New York, NY 10018

Vessel: MONTEREY

Dated: January 20, 1995.

Joseph C. Polking,

Secretary.

[FR Doc. 95–1941 Filed 1–25–95; 8:45 am]

BILLING CODE 6730–01–M

Security for the Protection of the Public Financial Responsibility to Meet Liability Incurred for Death or Injury to Passengers or Other Persons on Voyages; Notice of Issuance of Certificate (Casualty)

Notice is hereby given that the following have been issued a Certificate of Financial Responsibility to Meet Liability Incurred for Death or Injury to Passengers or Other Persons on Voyages pursuant to the provisions of Section 2, Public Law 89–777 (46 U.S.C. 817(d)) and the Federal Maritime Commission's implementing regulations at 46 CFR Part 540, as amended:

Royal Cruise Line Limited and Kloster Cruise Limited, One Maritime Plaza, Suite 1400, San Francisco, California 94111

Vessel: QUEEN ODYSSEY

Dated: January 20, 1995.

Joseph C. Polking,

Secretary.

[FR Doc. 95–1940 Filed 1–25–95; 8:45 am]

BILLING CODE 6730–01–M

FEDERAL RESERVE SYSTEM

Premier Financial Bancorp, Inc.; Formation of, Acquisition by, or Merger of Bank Holding Companies

The company listed in this notice has applied for the Board's approval under section 3 of the Bank Holding Company Act (12 U.S.C. 1842) and § 225.14 of the Board's Regulation Y (12 CFR 225.14) to become a bank holding company or to acquire a bank or bank holding company. The factors that are considered in acting on the applications are set forth in section 3(c) of the Act (12 U.S.C. 1842(c)).

The application is available for immediate inspection at the Federal Reserve Bank indicated. Once the application has been accepted for processing, it will also be available for inspection at the offices of the Board of Governors. Interested persons may express their views in writing to the Reserve Bank indicated for that application or to the offices of the Board of Governors. Any comment on an application that requests a hearing must include a statement of why a written presentation would not suffice in lieu of a hearing, identifying specifically any

questions of fact that are in dispute and summarizing the evidence that would be presented at a hearing.

Comments regarding this application must be received not later than February 21, 1995.

A. Federal Reserve Bank of Cleveland (John J. Wixted, Jr., Vice President) 1455 East Sixth Street, Cleveland, Ohio 44101:

1. Premier Financial Bancorp, Inc., Vanceburg, Kentucky; to merge with Georgetown Bancorp, Inc., Georgetown, Kentucky, and thereby indirectly acquire Georgetown Bank & Trust Company, Georgetown, Kentucky.

Board of Governors of the Federal Reserve System, January 20, 1995.

Jennifer J. Johnson,

Deputy Secretary of the Board.

[FR Doc. 95-1944 Filed 1-25-95; 8:45 am]

BILLING CODE 6210-01-F

Lakeview Financial Corporation, et al.; Notice of Applications to Engage de novo in Permissible Nonbanking Activities

The companies listed in this notice have filed an application under § 225.23(a)(1) of the Board's Regulation Y (12 CFR 225.23(a)(1)) for the Board's approval under section 4(c)(8) of the Bank Holding Company Act (12 U.S.C. 1843(c)(8)) and § 225.21(a) of Regulation Y (12 CFR 225.21(a)) to commence or to engage *de novo*, either directly or through a subsidiary, in a nonbanking activity that is listed in § 225.25 of Regulation Y as closely related to banking and permissible for bank holding companies. Unless otherwise noted, such activities will be conducted throughout the United States.

Each application is available for immediate inspection at the Federal Reserve Bank indicated. Once the application has been accepted for processing, it will also be available for inspection at the offices of the Board of Governors. Interested persons may express their views in writing on the question whether consummation of the proposal can ''reasonably be expected to produce benefits to the public, such as greater convenience, increased competition, or gains in efficiency, that outweigh possible adverse effects, such as undue concentration of resources, decreased or unfair competition, conflicts of interests, or unsound banking practices.'' Any request for a hearing on this question must be accompanied by a statement of the reasons a written presentation would not suffice in lieu of a hearing, identifying specifically any questions of fact that are in dispute, summarizing the evidence that would be presented at a hearing, and indicating how the party commenting would be aggrieved by approval of the proposal.

Unless otherwise noted, comments regarding the applications must be received at the Reserve Bank indicated or the offices of the Board of Governors not later than February 9, 1995.

A. Federal Reserve Bank of Chicago (James A. Bluemle, Vice President) 230 South LaSalle Street, Chicago, Illinois 60690:

1. Lakeview Financial Corporation, Lakeview, Michigan; to engage *de novo* through its subsidiary Lakeview Mortgage Corporation, Lansing, Michigan, in making and servicing loans, pursuant to § 225.25(b)(1) of the Board's Regulation Y.

B. Federal Reserve Bank of Dallas (Genie D. Short, Vice President) 2200 North Pearl Street, Dallas, Texas 75201-2272:

1. Central Louisiana Capital Corporation, Vidalia, Louisiana; to engage *de novo* through its subsidiary Community Credit Centers, Inc., Lake Providence, Louisiana, in making, acquiring, or servicing loans for itself or for others; engaging in loan marketing and advisory services; issuing and selling of money orders and similar consumer payment instruments with a face value not more than $1,000, pursuant to §§ 225.25(b)(1)(i) and 225.25(b)(12) of the Board's Regulation Y.

Board of Governors of the Federal Reserve System, January 20, 1995.

Jennifer J. Johnson,

Deputy Secretary of the Board.

[FR Doc. 95-1943 Filed 1-25-95; 8:45 am]

BILLING CODE 6210-01-F

CFX Corporation, et al.; Formations of; Acquisitions by; and Mergers of Bank Holding Companies

The companies listed in this notice have applied for the Board's approval under section 3 of the Bank Holding Company Act (12 U.S.C. 1842) and § 225.14 of the Board's Regulation Y (12 CFR 225.14) to become a bank holding company or to acquire a bank or bank holding company. The factors that are considered in acting on the applications are set forth in section 3(c) of the Act (12 U.S.C. 1842(c)).

Each application is available for immediate inspection at the Federal Reserve Bank indicated. Once the application has been accepted for processing, it will also be available for inspection at the offices of the Board of Governors. Interested persons may express their views in writing to the Reserve Bank or to the offices of the Board of Governors. Any comment on an application that requests a hearing must include a statement of why a written presentation would not suffice in lieu of a hearing, identifying specifically any questions of fact that are in dispute and summarizing the evidence that would be presented at a hearing.

Unless otherwise noted, comments regarding each of these applications must be received not later than February 17, 1995.

A. Federal Reserve Bank of Boston (Robert M. Brady, Vice President) 600 Atlantic Avenue, Boston, Massachusetts 02106:

1. CFX Corporation, (formerly Cheshire Financial Corporation), Keene, New Hampshire; to acquire 100 percent of the voting shares of Orange Savings Bank, Orange, Massachusetts. In connection with this application Orange Savings Bank will continue to participate in the Massachusetts Savings Bank Life Insurance program following consummation.

B. Federal Reserve Bank of Chicago (James A. Bluemle, Vice President) 230 South LaSalle Street, Chicago, Illinois 60690:

1. American Community Bankshares, Inc., Wausau, Wisconsin; to become a bank holding company by acquiring 100 percent of the voting shares of American Community Bank, Wausau, Wisconsin, a *de novo* bank.

Board of Governors of the Federal Reserve System, January 19, 1995.

Jennifer J. Johnson,

Deputy Secretary of the Board.

[FR Doc. 95–1904 Filed 1–25–95; 8:45 am]

BILLING CODE 6210-01-F

First Union Corporation, et al.; Notice of Applications to Engage de novo in Permissible Nonbanking Activities

The companies listed in this notice have filed an application under § 225.23(a)(1) of the Board's Regulation Y (12 CFR 225.23(a)(1)) for the Board's approval under section 4(c)(8) of the Bank Holding Company Act (12 U.S.C. 1843(c)(8)) and § 225.21(a) of Regulation Y (12 CFR 225.21(a)) to commence or to engage *de novo*, either directly or through a subsidiary, in a nonbanking activity that is listed in § 225.25 of Regulation Y as closely related to banking and permissible for bank holding companies. Unless otherwise noted, such activities will be conducted throughout the United States.

Each application is available for immediate inspection at the Federal Reserve Bank indicated. Once the

application has been accepted for processing, it will also be available for inspection at the offices of the Board of Governors. Interested persons may express their views in writing on the question whether consummation of the proposal can ''reasonably be expected to produce benefits to the public, such as greater convenience, increased competition, or gains in efficiency, that outweigh possible adverse effects, such as undue concentration of resources, decreased or unfair competition, conflicts of interests, or unsound banking practices.'' Any request for a hearing on this question must be accompanied by a statement of the reasons a written presentation would not suffice in lieu of a hearing, identifying specifically any questions of fact that are in dispute, summarizing the evidence that would be presented at a hearing, and indicating how the party commenting would be aggrieved by approval of the proposal.

Unless otherwise noted, comments regarding the applications must be received at the Reserve Bank indicated or the offices of the Board of Governors not later than February 8, 1995.

A. Federal Reserve Bank of Richmond (Lloyd W. Bostian, Jr., Senior Vice President) 701 East Byrd Street, Richmond, Virginia 23261:

1. First Union Corporation, Charlotte, North Carolina; to engage *de novo* through its subsidiary Ameribanc Investors Group, Annandale, Virginia, in the operation of a federal savings bank, Ameribanc Savings Bank FSB, Annandale, Virginia, pursuant to § 225.25(b)(9) of the Board's Regulation Y.

B. Federal Reserve Bank of Chicago (James A. Bluemle, Vice President) 230 South LaSalle Street, Chicago, Illinois 60690:

1. First of America Bank Corporation, Kalamazoo, Michigan; to engage *de novo* in the nonbanking activity of leasing tangible personal property or acting as agent, broker, or advisor in leasing such property, in which the lessor relies on an estimated residual value of the property in excess of 25 percent, pursuant to § 225.25(b)(5)(ii) of the Board's Regulation Y.

Board of Governors of the Federal Reserve System, January 19, 1995.

Jennifer J. Johnson,

Deputy Secretary of the Board.

[FR Doc. 95–1905 Filed 1–25–95; 8:45 am]

BILLING CODE 6210–01–F

Gillmor Financial Services, Inc.; Change in Bank Control Notices; Acquisitions of Shares of Banks or Bank Holding Companies; Correction

This notice corrects a notice (FR Doc. 95-525) published on pages 2600 and 2601 of the issue for Tuesday, January 10, 1995.

Under the Federal Reserve Bank of Cleveland heading, the entry for Gillmor Financial Services, Inc., is revised to read as follows:

1. Gillmor Financial Services, Inc., Old Fort, Ohio; Application to Engage in Nonbanking Activities

Gillmor Financial Services, Inc., Old Fort, Ohio (Applicant), has applied pursuant to section 4(c)(8) of the Bank Holding Company Act (12 U.S.C. 1843(c)(8)) (BHC Act) and § 225.23(a)) of the Board's Regulation Y (12 CFR 225.23(a)) to engage through its subsidiary, The Old Fort Real Estate Company, Old Fort, Ohio (Company), in community development activities pursuant to § 225.25(b)(6) of the Board's Regulation Y (12 C.F.R. § 225.25(b)(6)). In particular, Company would own a commercial building in Tiffin, Ohio, and lease it to a third party for use as a full-service grocery store (''Store'').

Section 4(c)(8) of the BHC Act provides that a bank holding company may, with prior Board approval, engage in any activity which the Board, after due notice and opportunity for hearing, has determined (by order or regulation) to be so closely related to banking or managing or controlling banks as to be a proper incident thereto. This statutory test requires that two separate tests be met for an activity to be permissible for a bank holding company. First, the Board must determine that the activity is, as a general matter, closely related to banking. Second, the Board must find in a particular case that the performance of the activity by the applicant bank holding company may reasonably be expected to produce public benefits that outweigh possible adverse effects.

The Board has previously determined by regulation that engaging in community development activities is closely related to banking and permissible for bank holding companies under section 4 of the BHC Act. *See* 12 CFR 225.25(b)(6). The Board's community development regulation provides that a bank holding company may make equity and debt investments in corporations or projects designed primarily to promote community welfare, such as the economic rehabilitation and development of low-income areas by providing housing, services, or jobs for residents. The Board also has issued an interpretation that provides further guidance on what types of investments qualify as permissible community welfare investments. 12 CFR 225.127.

Applicant maintains that Company's ownership and lease of a building for the operation of Store is authorized under the Board's community development regulation because the Store is located in a low- and moderate-income neighborhood of Tiffin based on measures of median household income. In addition, Applicant states that the Store constitutes the only full service grocery store within a 2-mile radius and that residents who live near the Store do not have access to public transportation that would enable them to shop elsewhere. Applicant also maintains that this proposal is consistent with the Board's determinations regarding permissible community development investments in *First Financial Corporation of Wellington*, 76 Federal Reserve Bulletin 671 (1990) (agricultural test farm) and *Luxemburg Bancshares, Inc.*, 77 Federal Reserve Bulletin 63 (1991) (medical clinic).

In order to satisfy the proper incident to banking test, section 4(c)(8) of the BHC Act requires the Board to find that the performance of the activities by Company can reasonably be expected to produce benefits to the public, such as greater convenience, increased competition, or gains in efficiency that outweigh possible adverse effects, such as undue concentration of resources, decreased or unfair competition, conflicts of interest, or unsound banking practices. Applicant believes that the proposed activities will benefit the public by bringing added convenience to residents of low- and moderate-income areas of Tiffin and by promoting competition. Applicant believes that the proposed activities will not result in any unsound banking practices or other adverse effects.

In publishing the proposal for comment, the Board does not take a position on issues raised by the proposal. Notice of the proposal is published solely in order to seek the views of interested persons on the issues presented by the application and does not represent a determination by the Board that the proposal meets, or is likely to meet, the standards of the BHC Act.

Any comments or requests for hearing should be submitted in writing and received by William W. Wiles, Secretary, Board of Governors of the Federal Reserve System, Washington, D.C. 20551, not later than January 24, 1995. Any request for a hearing on this application must, as required by § 262.3(e) of the Board's Rules of

Procedure (12 CFR 262.3(e)), be accompanied by a statement of the reasons why a written presentation would not suffice in lieu of a hearing, identifying specifically any questions of fact that are in dispute, summarizing the evidence that would be presented at a hearing, and indicating how the party commenting would be aggrieved by approval of the proposal.

This application may be inspected at the offices of the Board of Governors or the Federal Reserve Bank of Cleveland.

Board of Governors of the Federal Reserve System, January 19, 1995.

Jennifer J. Johnson,

Deputy Secretary of the Board.

[FR Doc. 95-1906 Filed 1–25–95; 8:45 am]

BILLING CODE 6210–01–F

John P. Wangensteen, et al.; Acquisitions of Companies Engaged in Permissible Nonbanking Activities

The organizations listed in this notice have applied under § 225.23(a)(2) or (f) of the Board's Regulation Y (12 CFR 225.23(a)(2) or (f)) for the Board's approval under section 4(c)(8) of the Bank Holding Company Act (12 U.S.C. 1843(c)(8)) and § 225.21(a) of Regulation Y (12 CFR 225.21(a)) to acquire or control voting securities or assets of a company engaged in a nonbanking activity that is listed in § 225.25 of Regulation Y as closely related to banking and permissible for bank holding companies. Unless otherwise noted, such activities will be conducted throughout the United States.

Each application is available for immediate inspection at the Federal Reserve Bank indicated. Once the application has been accepted for processing, it will also be available for inspection at the offices of the Board of Governors. Interested persons may express their views in writing on the question whether consummation of the proposal can ''reasonably be expected to produce benefits to the public, such as greater convenience, increased competition, or gains in efficiency, that outweigh possible adverse effects, such as undue concentration of resources, decreased or unfair competition, conflicts of interests, or unsound banking practices.'' Any request for a hearing on this question must be accompanied by a statement of the reasons a written presentation would not suffice in lieu of a hearing, identifying specifically any questions of fact that are in dispute, summarizing the evidence that would be presented at a hearing, and indicating how the party commenting would be aggrieved by approval of the proposal.

Unless otherwise noted, comments regarding each of these applications must be received at the Reserve Bank indicated for the application or the offices of the Board of Governors not later than February 8, 1995.

A. Federal Reserve Bank of Minneapolis (James M. Lyon, Vice President) 250 Marquette Avenue, Minneapolis, Minnesota 55480:

1. John P. and Charles T. Wangensteen, both of Chisholm, Minnesota; to increase their joint ownership from 26.86 percent, to 27.38 percent of the voting shares of Chisholm Bancshares, Inc., Chisholm, Minnesota, and thereby indirectly acquire The First National Bank of Chisholm, Chisholm, Minnesota.

Board of Governors of the Federal Reserve System, January 19, 1995.

Jennifer J. Johnson,

Deputy Secretary of the Board.

[FR Doc. 95–1907 Filed 1–25–95; 8:45 am]

BILLING CODE 6210-01-F

FEDERAL TRADE COMMISSION

Granting of Request for Early Termination of the Waiting Period Under the Premerger Notification Rules

Section 7A of the Clayton Act, 15 U.S.C. 18a, as added by Title II of the Hart-Scott-Rodino Antitrust Improvements Act of 1976, requires persons contemplating certain mergers or acquisitions to give the Federal Trade Commission and the Assistant Attorney General advance notice and to wait designated periods before consummation of such plans. Section 7A(b)(2) of the Act permits the agencies, in individual cases, to terminate this waiting period prior to its expiration and requires that notice of this action be published in the **Federal Register**.

The following transactions were granted early termination of the waiting period provided by law and the premerger notification rules. The grants were made by the Federal Trade Commission and the Assistant Attorney General for the Antitrust Division of the Department of Justice. Neither agency intends to take any action with respect to these proposed acquisitions during the applicable waiting period.

TRANSACTIONS GRANTED EARLY TERMINATION BETWEEN: 12/12/94 AND 12/30/94

Name of acquiring person, name of acquired person, name of acquired entity	PMN No.	Date terminated
GTE Corporation, Media/Communications Partners Limited Partnership, Crowley Cellular Telecommunications Huntsville, Inc	94–2287	12/13/94
N.V. Verenigd Bezit VNU, Ceridian Corporation, Competitive Media Reporting	95–0432	12/13/94
N.V. Verenigd Bezit VNU, N.V. Verenigd Bezit VNU, Competitive Media Reporting	95–0433	12/13/94
Rich L. Rozar, Sumner M. Redstone, Statewide Data Services, Inc	95–0470	12/13/94
BCE Inc., BCE Inc., NYNEX Meridian Systems (a partnership)	95–0472	12/13/94
Dames & Moore, Inc., Frank H. and Consuelo F. Walk, Walk, Haydel & Associates, Inc	95–0490	12/13/94
Dames & Moore, Inc., Gerald M. Haydel and Agatha M. Haydel, Walk, Haydel & Associates, Inc	95–0491	12/13/94
Keith Rupert Murdoch, Sumner M. Redstone, Paramount Stations Group of Philadelphia, Inc	95–0492	12/13/94
Cytogen Corporation, CytoRad Incorporated, CytoRad Incorporated	95–0493	12/13/94
The Fuji Bank Limited, EWI, Inc., EWI, Inc	95–0504	12/13/94
Vitas Healthcare Corporation, Connie A. Black, Community Hospice Care of Orange County, Ltd. L.P	95–0518	12/13/94
Franklin Qeust Co., Publishers Press, Inc., Publishers Press, Inc	95–0529	12/13/94
Orbital Sciences Corporation, Magellan Corporation, Magellan Corporation	95–0531	12/13/94
ShoLodge, Inc., Prime Hospitality Corp., Suites of America, Inc	95–0535	12/13/94
Lockheed Corporation, LAT International Airport Services, L.L.C., LAT International Airport Services, L.L.C	95–0545	12/13/94
Dardel Technologies, AT&T Corp., AT&T Global Information Solutions Company	95–0548	12/13/94
Ameritech Corporation, Media/Communications Partners Limited Partnership, Maximum Protection Industries, Inc	95–0551	12/13/94
Deluxe Corporation, Financial Alliance Processing Services, Inc., Financial Alliance Processing Services, Inc	95–0561	12/13/94
Harold C. Simmons Family Trust No. 2, NL Industries, Inc., NL Industries, Inc	95–0567	12/13/94
BCI Growth III, L.P., People's Choice T.V. Corp., People's Choice T.V. Corp	95–0568	12/13/94

TRANSACTIONS GRANTED EARLY TERMINATION BETWEEN: 12/12/94 AND 12/30/94—Continued

Name of acquiring person, name of acquired person, name of acquired entity	PMN No.	Date terminated
Oscar I Corporation, Oscar II Corporation, Oscar II Corporation	95–0569	12/13/94
Aon Corporation, James R. Dawley, Energy Insurance International, Inc	95–0571	12/13/94
James R. Dawley, Aon Corporation, Aon Corporation	95–0572	12/13/94
Hospitality Franchise Systems, Inc., Casino & Credit Services, Inc., Casino & Credit Services, Inc	95–0573	12/13/94
American General Corporation, Western National Corporation, Western National Corporation	95–0576	12/13/94
Coeur d'Alene Mines Corporation, Silver Resources Corporation, Silver Resources Corporation	95–0578	12/13/94
John Alden Financial Corporation, Extendicare Inc., American Crown Life Insurance Company	95–0581	12/13/94
First Tennessee National Corporation, Carl I. Brown and Molly S. Brown, Carl I. Brown and Company	95–0585	12/13/94
HydroChem Holding, Inc., Halliburton Company, Brown & Root Industrial Services, Inc	95–0586	12/13/94
Galaxy Telecom Investments, L.L.C., Westinghouse Electric Corporation, Vista Communications Limited Partnership III	95–0589	12/13/94
Kaufman and Broad Home Corporation, Oppel Jenkins of Albuquerque, Inc., Oppel Jenkins of Albuquerque, Inc	95–0593	12/13/94
Robert H. Dedman, Sr., Chevron Corporation, Coto de Caza Golf and Racquet Club	95–0598	12/13/94
William H. Gates, ICOS Corporation, ICOS Corporation	95–0605	12/13/94
Computer Science Corporation, General Motors Corporation, Hughes Aircraft Company	95–0607	12/13/94
Kirk Kerkorian, Chrysler Corporation, Chrysler Corporation	95–0379	12/14/94
Kleiner Perkins Caufield & Byers VI, L.P., Spectrum, HoloByte, Inc., Spectrum, HoloByte, Inc	95–0380	12/14/94
Emerson Electric Co., Control Techniques, plc, Control Techniques, plc	95–0400	12/14/94
Sprint Corporation, TDS Voting Trust, Ohio RSA No. 1 Limited Partnership	95–0440	12/14/94
Nohmi Bosai Ltd., Secom Co., Ltd., Westec Security, Inc	95–0462	12/14/94
Mr. Keith Rupert Murdoch, Boston Celtics Limited Partnership, Boston Celtics Broadcasting LP	95–0464	12/14/94
Amgen Inc., Synergen, Inc., Synergen, Inc	95–0466	12/14/94
VIAG AG (a German Company), Elf Aquitaine (a French company), Sanofi, Inc	95–0517	12/14/94
Fund American Enterprises Holdings, Inc., National Grange Mutual Insurance Company, Main Street America Holdings, Inc	95–0560	12/14/94
Tenneco Inc., Pennzoil Company, Pennzoil Exploration and Production Company	95–0570	12/14/94
ASARCO Incorporated, Silver Resources Corporation, Silver Resources Corporation	95–0582	12/14/94
General Electric Company	95–0599	12/14/94
CUC International Inc., Kevin E. Crowe, Essex Corporation	95–0601	12/14/94
The TCW Group, Inc., Media Vision Technology, Inc. (Debtor-in-Possession), Media Vision Technology, Inc. (Debtor-in-Possession)	95–0625	12/14/94
Mobile Telecommunication Technologies Corp., United States Paging Corporation, United States Paging Corporation	95–0549	12/15/94
Capital Cities/ABC, Inc., Media/Communications Partners Limited Partnership, SJL of Michigan Corp. and WTVG, Inc	95–0566	12/15/94
Corning Incorporated, BCE Inc. (a Canadian company), Northern Telecom Ltd	94–2303	12/16/94
Farmland Industries, Inc., WilFarm LLC, WilFarm LLC	95–0557	12/16/94
Wilbur-Ellis Company, WilFarm LLC, WilFarm LLC	95–0558	12/16/94
S.C. Johnson and Son, Inc., Morrison Knudson Corporation, Morrison Knudson Corporation	95–0600	12/16/94
Pioneer Financial Services, Inc., E–L Financial Corporation Limited, Connecticut National Life Insurance Company	95–0602	12/16/94
Raymond D. Schoenbaum, Applebee's International, Inc., Applebee's International, Inc	95–0614	12/16/94
M. Francois Pinault, Apollo Investment Fund, L.P., Interco Inc., Converse Inc.; Florsheim Shoe Co. Inc	95–0655	12/16/94
Citicorp, Aviall, Inc., Aviall Services, Inc	95–0289	12/19/94
Fleet Financial Group, Inc., MJD Communications, Inc., MJD Communications, Inc	95–0513	12/19/94
North Pacific Lumber Co., Schultz, Snyder & Steel Lumber Company, Schultz, Snyder & Steel Lumber Company	95–0539	12/19/94
Hicks, Muse, Tate & Furst Equity Fund II, L.P., Jeffrey L. Yarbrough, Angela Marie's, Inc	95–0550	12/19/94
Dr. Charles A. Wilson, Witco Corporation, The Richardson Company	95–0579	12/19/94
HBE Corporation, Samuel Gary, Omicron Company	95–0584	12/19/94
General Electric Company, Eulich Family Trust, Market East Associates Limited Partnership	95–0592	12/19/94
General Motors Corporation, Murray T. Holland, USTravel Systems, Inc	95–0596	12/19/94
Michael E. Heisley, Robertson-Ceco Corporation, Robertson-Ceco Corporation	95–0597	12/19/94
Norcen Energy Resources Limited, Mobile Corporation, Mobil Oil Exploration & Producing Southeast, Inc	95–0627	12/19/94
Handleman Company, The Chas. Levy Company, Levy Home Entertainment, Inc	95–0632	12/19/94
Alltel Corporation, Telephone and Data Systems Voting Trust, Telephone and Data Systems, Inc	95–0635	12/19/94
Telephone and Data Systems Voting Trust, Alltel Corporation, Alltel Corporation	95–0636	12/19/94
Liberty Mutual Insurance Company, John A. McNeice, The Colonial Group, Inc	95–0648	12/19/94
John A. McNeice, Jr., Liberty Mutual Insurance Company, Liberty Financial Companies, Inc	95–0649	12/19/94
C. Herbert Emilson, Liberty Mutual Insurance Company, Liberty Mutual Insurance Company	95–0650	12/19/94
International Nederlanden Group NV (a Dutch company), Ford Motor Company, FN Realty Advisors, Inc	95–0656	12/19/94
Galaxy Telecom Investments, L.L.C., Iowa Farm Bureau Federation, Vantage Cable Associates, L.P	95–0469	12/20/94
United Waste Systems, Inc., Joseph Partyka, Jr., Connecticut Valley Sanitary Waste Disposal, Inc	95–0481	12/20/94
Columbia/HCA Healthcare Corporation, Angelo Community Hospital, Angelo Community Hospital	95–0533	12/20/94
Applebee's International, Inc., Raymond D. Schoenbaum, Innovative Restaurant Concepts, Inc	95–0615	12/20/94
Park-Ohio Industries, Inc., RB&W Corporation, RB&W Corporation	95–0642	12/20/94
International Paper Company, William M. Close, Kirk Paper Corporation and Kirk Paper, Arizona, Inc	95–0662	12/20/94
The Taubman Realty Group Limited Partnership, Aetna Life and Casualty Company, Biltmore Fashion Park Associates	95–0463	12/21/94
The Taubman Realty Group Limited Partnership, Samuel Marc Grossman, Biltmore Fashion Park Associates	95–0465	12/21/94

TRANSACTIONS GRANTED EARLY TERMINATION BETWEEN: 12/12/94 AND 12/30/94—Continued

Name of acquiring person, name of acquired person, name of acquired entity	PMN No.	Date terminated
Schlumberger Limited, Thorn EMI PLC, Thorn EMI Malco, Inc	95–0506	12/21/94
AT&T Corp., Clayton & Dubilier Private Equity Fund IV, L.P. (The), Lexmark Holding Inc	95–0536	12/21/94
Western Mining Corporation Holdings Limited, Alcoa Alumina & Chemicals, L.L.C., Alcoa Alumina & Chemicals, L.L.C	95–0574	12/21/94
Aluminum Company of America, Alcoa Alumina & Chemicals, L.L.C., Alcoa Alumina & Chemicals, L.L.C	95–0575	12/21/94
David Carmell, WSR Corporation, The Whitlock Corporation	95–0652	12/21/94
Reckitt & Colman plc, Eastman Kodak Company, L&F Products Inc	95–0054	12/22/94
Martin Marietta Corporation, Dravo Corporation, Dravo Basic Materials Company, Inc	95–0094	12/22/94
Avesta Sheffield AB, Armco Inc., Eastern Stainless Corporation	95–0100	12/22/94
Edward F. Crawford, Park-Ohio Industries, Inc., Park-Ohio Industries, Inc	95–0507	12/22/94
Cooper Industries, Inc., Abex Inc., Pneumo Abex Corporation	95–0530	12/22/94
Occidental Petroleum Corporation, Placid Oil Company, Placid Oil Company	95–0547	12/22/94
Quantum Industrial Holdings Ltd., LAT International Airport Services, LLC, LAT International Airport Services, LLC	95–0559	12/22/94
AT&T Corp., Sierra On-Line, Inc., The ImagiNation Network, Inc	95–0511	12/23/94
Golden Guernsey Dairy Cooperative, Wisconsin Dairies Cooperative, Wisconsin Dairies Cooperative	95–0543	12/23/94
Wisconsin Dairies Cooperative, Golden Guernsey Dairy Cooperative, Golden Guernsey Dairy Cooperative	95–0544	12/23/94
Burlington Industries Inc., Patrick R. Haynes, Jr., The Bacova Guild, Ltd	95–0594	12/23/94
Burlington Industries, Inc., Benjamin I. Johns, Jr., The Bacova Guild, Ltd	95–0595	12/23/94
The Community Mutual Insurance Company, Michael E. Ervin, Wright Health Associates, Inc	95–0611	12/23/94
Koch Industries, Inc., Exxon Corporation, Exxon Pipeline Corporation	95–0622	12/23/94
Lomak Petroleum, Inc., Red Eagle Resources Corporation, Red Eagle Resources Corporation	95–0628	12/23/94
Morgan Stanley Capital Partners III, L.P., The Compucare Company, The Compucare Company	95–0638	12/23/94
American General Corporation, American Brands, Inc., American Franklin Company	95–0641	12/23/94
C.H. Guenther & Son, Incorporated, The WL Partnership L.P., The White Lilly Food Company	95–0657	12/23/94
Rolf Anders, John G. Rigg, Redco Foods, Inc	95–0663	12/23/94
New England Teamsters & Trucking Industry Pension Fund, Canadian-North Carolina Associates, Tarrymore Square Associates	95–0666	12/23/94
New England Teamsters & Trucking Ind. Pension Fund, Canadian McMullen Associates, McMullen Associates	95–0668	12/23/94
Prime Hospitality Corp., Crossroads Developers Associates, LLC, Crossroads Developers Associates, LLC	95–0675	12/23/94
Harvest Foods, Inc., Estate of Benjamin A. Rand, Rand's, Inc	95–0678	12/23/94
America Online, Inc., Advanced Network & Services, Inc., ANS CO+RE Systems, Inc./ Advanced Network & Services Inc	95–0683	12/23/94
Dr.-Ing. Otto Happel, Michael Mueller-Habig, Centrico, Inc	95–0693	12/23/94
A.H. Belo Corporation, Deseret Management Corporation, Third Avenue Television, Inc	95–0695	12/23/94
First Union Corporation, Chrysler Capital Income Partners, L.P., Chrysler Capital Income Partners, L.P	95–0699	12/23/94
RailTex, Inc., Southern Pacific Rail Corporation, Southern Pacific Transportation Company	95–0514	12/27/94
Vanguard Cellular Systems, Inc., George W. Estess, Sunshine Cellular, a Maryland general partnership	95–0629	12/27/94
Vanguard Cellular Systems, Inc., Robert G. Kerrigan, Sunshine Cellular, a Maryland general partnership	95–0630	12/27/94
Dennis R. Washington, Mesa Inc., Mesa Inc	95–0631	12/27/94
H Group Holding, Inc., David Z. Burger, City Freeholds (U.S.A.), Inc	95–0640	12/27/94
Code, Hennessy & Simmons II, L.P., Disguise, Inc., Disguise, Inc	95–0658	12/27/94
Perrigo Company, John G. Brunner, Vi-Jon Laboratories, Inc	95–0661	12/27/94
International Recovery Corp., Trans-Tec Services, Inc., Trans-Tec Services, Inc	95–0670	12/27/94
Southwestern Bell Corporation, Telephone and Data Systems, Inc., Voting Trust, New York RSA No. 1 Limited Partnership	95–0689	12/27/94
Dobson Park Industries plc, Longwall International Limited, Longwall International Limited	95–0694	12/27/94
Rock-Tenn Company, Olympic Packaging, Inc., Olympic Packaging, Inc	95–0696	12/27/94
Caremark International Inc., Friendly Hills HealthCare Network, Friendly Hills HealthCare Network	95–0700	12/27/94
Nestle S.A., Grand Metropolitan Public Limited Company, Allen Products Company, Inc	94–1903	12/28/94
Gerald W. Schwartz, Dalgety, plc (an English Company), Martin-Bromar Company (National Accounts Division)	95–0437	12/28/94
BankAmerica Corporation, Camino Laboratories, Inc., Camino Laboratories, Inc	95–0621	12/28/94
Cargill, Incorporated, North Star BHP Steel LLC, North Star BHP Steel LLC	95–0624	12/28/94
Ciba-Geigy Limited, Rhone-Poulenc S.A., Rhone-Poulenc Rorer Inc	95–0643	12/28/94
Summer M. Redstone, Dr. Gail Richardson & Claudia Richardson, Educational Management Group, Inc	95–0707	12/28/94
Fieldcrest Cannon, Inc., BankAmerica Corporation, UTC Holdings, Inc	95–0682	12/29/94
Sumitomo Corporation, Banc One Corporation, Diversified CPC International, Inc	95–0706	12/29/94

FOR FURTHER INFORMATION CONTACT: Sandra M. Peay or Renee A. Horton, Contact Representatives, Federal Trade Commission, Premerger Notification Office, Bureau of Competition, Room 303, Washington, DC 20580, (202) 326–3100.

By direction of the Commission.

Donald S. Clark,

Secretary.

[FR Doc. 95–1960 Filed 1–25–95; 8:45 am]

BILLING CODE 6750–01–M

DEPARTMENT OF HEALTH AND HUMAN SERVICES

Administration for Children and Families

Agency Information Collection Under OMB Review

Under the provisions of the Paperwork Reduction Act (44 U.S.C. Chapter 35), the Administration for Children and Families (ACF) has submitted to the Office of Management and Budget (OMB) a request to extend the prior approval of the paperwork burden associated with the application required for the Head Start Program Information Report.

This request is being made to extend the OMB authorization of the Program Information Report to June 30, 1996. There is no change in the previously approved paperwork burden.

ADDRESSES: Copies of the request for approval may be obtained from Bob Sargis of the Office of Information Systems Management, ACF, by calling (202) 690–7275.

Consideration will be given to comments and suggestions received March 1, 1995. Written comments and recommendations for the proposed information should be sent directly to the following: Wendy Taylor, OMB Desk Officer for ACF, New Executive Office Building, Room 10235, 725 17th Street, N.W., Washington, D.C. 20503 (202) 395–7316

Information on Document

Title: Head Start Program Information Report

OMB No.: 0980–0017

Description: This Program Information Report is used to collect data necessary to evaluate the services delivered to participating children and families.

Respondents: States and Territories

Annual Number of Respondents: 2006 sites

Total annual responses: 2006 sites

Hours per response: 3.5

Total Burden Hours: 7,021

Dated: January 18, 1995.

Larry Guerrero,

Deputy Director, Office of Information Systems Management.

[FR Doc. 95–1912 Filed 1–25–95; 8:45 am]

BILLING CODE 4184–01–M

Food and Drug Administration

[Docket No. 91F–0324]

Goodyear Tire & Rubber Co.; Filing of Food Additive Petition; Amendment

AGENCY: Food and Drug Administration, HHS.

ACTION: Notice.

SUMMARY: The Food and Drug Administration (FDA) is amending the filing notice for a food additive petition filed by Goodyear Tire & Rubber Co. to indicate that the petitioned additive, alkylthiophendics, acid-catalyzed condensation reaction products of *p*-nonylphenol, formaldehyde, and 1-dodecanethiol, is also intended for use in pressure-sensitive adhesives. The previous filing notice indicated that the additive was intended for use only as an antioxidant for adhesives and repeat-use rubber articles.

DATES: Written comments on the petitioner's environmental assessment by February 27, 1995.

ADDRESSES: Submit written comments to the Dockets Management Branch (HFA–305), Food and Drug Administration, rm. 1–23, 12420 Parklawn Dr., Rockville, MD 20857.

FOR FURTHER INFORMATION CONTACT: Andrew J. Zajac, Center for Food Safety and Applied Nutrition (HFS–216), Food and Drug Administration, 200 C St. SW., Washington, DC 20204, 202–418–3095.

SUPPLEMENTARY INFORMATION: In a notice published in the **Federal Register** of September 12, 1991 (56 FR 46439), FDA announced that a food additive petition (FAP 1B4259) had been filed by Goodyear Tire & Rubber Co., Akron, OH 44316–0001 (currently 1001 G St. N.W., Suite 500 West, Washington, DC 20001), proposing that § 178.2010 *Antioxidants and/or stabilizers for polymers* (21 CFR 178.2010) be amended to provide for the safe use of the acid-catalyzed condensation reaction product of *p*-nonylphenol, formalin, and 1-dodecanethiol as an antioxidant for adhesives, listed under 21 CFR 175.105, and rubber articles, listed under 21 CFR 177.2600, intended for repeated use in food packaging.

Upon further review of the petition, the agency notes that the additive is specifically intended for use in pressure-sensitive adhesives rather than adhesives. However, the petitioner has subsequently amended the petition to also include the use of the additive in adhesives. In addition, the agency is also modifying the nomenclature for clarification. Therefore, FDA is amending the filing notice of September 12, 1991, to state that the petitioner requests that § 178.2010 *Antioxidants and/or stabilizers for polymers* be amended to provide for the safe use of alkylthiophendics formed by the acid-catalyzed condensation reaction of *p*-nonylphenol, formaldehyde, and 1-dodecanethiol as an antioxidant for adhesives, listed under 21 CFR 175.105, pressure-sensitive adhesives, listed under 21 CFR 175.125, and repeat-use rubber articles, listed under 21 CFR 177.2600.

The potential environmental impact of this action is being reviewed. To encourage public participation consistent with regulations promulgated under the National Environmental Policy Act (40 CFR 1501.4(b)), the agency is placing the environmental assessment submitted with the petition that is the subject of this notice on public display at the Dockets Management Branch (address above) for public review and comment. Interested persons may, on or before February 27, 1995, submit to the Dockets Management Branch (address above) written comments. Two copies of any comments are to be submitted, except that individuals may submit one copy. Comments are to be identified with the docket number found in brackets in the heading of this document. Received comments may be seen in the office above between 9 a.m. and 4 p.m., Monday through Friday. FDA will also place on public display any amendments to, or comments on, the petitioner's environmental assessment without further announcement in the **Federal Register**. If, based on its review, the agency finds that an environmental impact statement is not required and this petition results in a regulation, the notice of availability of the agency's finding of no significant impact and the evidence supporting that finding will be published with the final regulation in the **Federal Register** in accordance with 21 CFR 25.40(c).

Dated: January 18, 1995.

Alan M. Rulis,

Acting Director, Office of Premarket Approval, Center for Food Safety and Applied Nutrition.

[FR Doc. 95–2007 Filed 1–25–95; 8:45 am]

BILLING CODE 4160–01–F

Health Care Financing Administration

[BPD–776–FNC]

RIN 0938–AG27

Medicare Program; Additions To and Deletions From the Current List of Covered Surgical Procedures for Ambulatory Surgical Centers

AGENCY: Health Care Financing Administration (HCFA), HHS.

ACTION: Final notice with comment period.

SUMMARY: This final notice with comment period implements section 1833(i)(1) of the Social Security Act, which requires, in part, that the list of covered ambulatory surgical center (ASC) procedures be reviewed and updated at least every 2 years.

This notice announces the specific additions to and deletions from the list of surgical procedures for which facility services are covered when the procedures are performed in a Medicare-participating ASC, as well as the assigned payment groups for each addition. The notice also announces a change in our criteria for deleting procedures from the ASC list. This notice also responds to public comments received in response to our proposed notice published December 14, 1993 (58 FR 65357). In that notice, we requested comments on the proposed additions to and deletions from the list of covered surgical procedures for ASCs; the proposed quantitative change in our deletion criteria; the development of alternatives to the proposed quantitative deletion criteria; and the assignment of payment groups for each addition.

Finally, this notice solicits public comment on certain additions to and deletions from the ASC list that had not been suggested in our December 1993 proposed notice. It also solicits public comment on the assignment of payment groups for certain new procedure codes.

EFFECTIVE DATE: The effective date of this notice is February 27, 1995, except as follows. The effective date for the procedures that are being deleted from the ASC list, as listed in Addendum A, is April 26, 1995.

The effective date for the procedures that were deleted from the list as a result of deletions from the 1992 Physicians' Current Procedural Terminology (CPT), as listed in part 1 of Addendum C, is March 31, 1992. The effective date for the procedures that were added to the list as a result of additions to the 1992 CPT, as listed in part 2 of Addendum C, is January 30, 1992.

The effective date for the procedures that were deleted from the list as a result of deletions from the 1993 CPT, as listed in part 3 of Addendum C, is July 7, 1993. The effective date for the procedures that were added to the list as a result of additions to the 1993 CPT, as listed in part 4 of Addendum C, is January 1, 1993.

The effective date for the procedures that were deleted from the list as a result of deletions from the 1994 CPT, as listed in part 5 of Addendum C, is April 11, 1994. The effective date for the procedures that were added to the list as a result of additions to the 1994 CPT, as listed in part 6 of Addendum C, is January 1, 1994.

COMMENT DATES: We are requesting public comment on the addition of, and assignment of payment groups for, the following new CPT codes, which are listed in Addendum B (since these codes were not suggested in our December 1993 proposed notice): CPT codes 29804, 43259, 51040, 52450, 56309, 56316, 56317, 56351, 56356, and 64421. We are requesting public comment on the appropriateness of the deletion of the CPT codes listed in Addendum C, part 5, and the deletion of CPT code 36522, listed in Addendum A, because these codes were not suggested in our December 1993 proposed notice. Additionally, we are requesting public comment on the appropriateness of the addition of, and assignment of payment groups for, the CPT codes listed in part 6 of Addendum C. Comments will be considered if we receive them at the appropriate address, as provided below, no later than 5 p.m. on March 27 1995.

ADDRESSES: Mail written comments (1 original and 3 copies) to the following address: Health Care Financing Administration, Department of Health and Human Services, Attention: BPD–776–FNC, P.O. Box 26688, Baltimore, MD 21207.

If you prefer, you may deliver your written comments (1 original and 3 copies) to one of the following addresses:

Room 309–G, Hubert H. Humphrey Building, 200 Independence Avenue, SW., Washington, DC 20201, or

Room 132, East High Rise Building, 6325 Security Boulevard, Baltimore, MD 21207.

Because of staffing and resource limitations, we cannot accept comments by facsimile (FAX) transmission. In commenting, please refer to file code BPD–776–FNC. Comments received timely will be available for public inspection as they are received, generally beginning approximately 3 weeks after publication of a document, in Room 309–G of the Department's offices at 200 Independence Avenue, SW., Washington, DC, on Monday through Friday of each week from 8:30 a.m. to 5 p.m. (phone: (202) 690–7890).

Copies: To order copies of the **Federal Register** containing this document, send your request to: New Orders, Superintendent of Documents, P.O. Box 371954, Pittsburgh, PA 15250–7954. Specify the date of the issue requested and enclose a check or money order payable to the Superintendent of Documents, or enclose your Visa or Master Card number and expiration date. Credit card orders can also be placed by calling the order desk at (202) 512–1800 or by faxing to (202) 512–2250. The cost for each copy is $8. As an alternative, you can view and photocopy the **Federal Register** document at most libraries designated as Federal Depository Libraries and at many other public and academic libraries throughout the country that receive the **Federal Register**.

FOR FURTHER INFORMATION CONTACT: Jackie Sheridan, (410) 966–4635 for Additions or Deletions. Joan Sanow, (410) 966–5723 for Payment Groups.

SUPPLEMENTARY INFORMATION:

I. Background

Section 934 of the Omnibus Reconciliation Act of 1980 (Public Law 96–499), enacted on December 5, 1980, amended sections 1832(a)(2) and 1833 of the Social Security Act (the Act) to authorize the Secretary to provide benefits for services furnished in an ambulatory surgical center (ASC). Section 1833(i)(1) of the Act requires the Secretary to specify, in consultation with appropriate medical organizations, surgical procedures that, although appropriately performed in an inpatient hospital setting, can also be performed safely on an ambulatory basis. The report accompanying the legislation explained that the Congress intended that procedures currently performed on an ambulatory basis in a physician's office, which do not generally require the more elaborate facilities of an ASC, should not be included in the list of covered procedures (H.R. Rep. No. 1167, 96th Congress, 2d Session 390 (1980), *reprinted* in 1980 U.S.C.C.A.N. 5526, 5753).

On August 5, 1982, we published a final rule in the **Federal Register** (47 FR 34094) to establish Medicare coverage for ASC services at 42 CFR part 416. These regulations were amended on November 14, 1986 (51 FR 41351), June 12, 1987 (52 FR 22454), and April 7, 1988 (53 FR 11508). We implement the

provision requiring the Secretary to publish a list of procedures covered in an ASC through issuance of periodic notices in the **Federal Register**.

Section 9343 of the Omnibus Budget Reconciliation Act of 1986 (OBRA '86) (Public Law 99–509), enacted on October 21, 1986, amended section 1833(i)(1) of the Act to require that the ASC list of procedures be reviewed and updated by April 21, 1987, and not less often than every 2 years thereafter. As a result, we published updates in the **Federal Register** on April 21, 1987 (52 FR 13176), June 1, 1989 (54 FR 23540), and December 31, 1991 (56 FR 67666). These updates supplement the original list of covered ASC procedures published on August 5, 1982 (47 FR 34099).

In line with the Congressional intent, current regulations (42 CFR 416.65(a)) list the following general requirements regarding the range of covered ASC services:

- Procedures on the list are commonly performed on an inpatient basis but, consistent with accepted medical practice, also may be performed in an ASC.
- The list excludes procedures that are commonly performed, or may be safely performed, in a physician's office.
- Procedures are limited to those requiring a dedicated operating room and generally do not require an overnight stay.
- The list does not contain procedures excluded from Medicare coverage.

In addition, current regulations (§ 416.65(b)) list the following specific requirements:

- Covered surgical procedures are limited to those that do not generally exceed—
  + A total of 90 minutes operating time; and
  + A total of 4 hours recovery or convalescent time.
- If the covered surgical procedures require anesthesia, the anesthesia must be—
  + Local or regional anesthesia; or
  + General anesthesia of 90 minutes or less duration.
- Covered surgical procedures may not be of a type that—
  + Generally result in extensive blood loss;
  + Require major or prolonged invasion of body cavities;
  + Directly involve major blood vessels; or
  + Are generally emergency or life-threatening in nature.

Currently, ASC covered procedures are classified according to an eight group payment classification system, as follows:

Group 1—$295
Group 2—$395
Group 3—$453
Group 4—$558
Group 5—$637
Group 6—$750 ($600+$150)
Group 7—$883
Group 8—$880 ($730+$150)

(The $150 payment allowance in Groups 6 and 8 is for intraocular lenses (IOLs).) A ninth payment group allotted exclusively to extracorporeal shock wave lithotripsy (ESWL) services was established in the notice with comment period published December 31, 1991 (56 FR 67666). The decision in *American Lithotripsy Society v. Sullivan*, 785 F. Supp. 1034 (D.D.C. 1992) prohibits us from paying for these services under the ASC benefit at this time. ESWL payment rates are the subject of a separate **Federal Register** proposed notice, which was published October 1, 1993 (58 FR 51355).

The ASC facility payment for all procedures in each group is established at a single rate adjusted for geographic variation. This prospectively determined facility group rate does not include physicians' fees and other medical items and services (for example, prosthetic devices, except IOLs) for which separate payment is authorized under other provisions of the Medicare program. Rather, the rate is a standard overhead amount that covers the cost of services such as nursing, supplies, equipment, and use of the facility.

Section 9343 of OBRA '86 amended section 1833(i)(2)(A) of the Act to require updating of the ASC payment rates annually beginning no later than July 1, 1987. In addition, so that the most current wage index values can be used in determining payment amounts for ASC facility services, annual ASC payment rate updates are implemented concurrently with the annual update of the inpatient hospital prospective payment system (PPS) wage index published in the **Federal Register**.

Section 13531 of the Omnibus Budget Reconciliation Act of 1993 (OBRA '93) (Public Law 103–66), enacted on August 10, 1993, prohibited the Secretary from providing for any inflation update in the ASC payment rates for fiscal year 1995. In addition, the legislation reduced the allowance for an IOL furnished during or subsequent to cataract surgery performed in an ASC from $200 to $150 beginning January 1, 1994, and before January 1, 1999. As a result, the payment rates and the $150 payment allowance for an IOL in Groups 6 and 8 will remain the same in fiscal year 1995.

In our December 1991 notice, we stated that changes in ASC payment rates and the list of ASC covered procedures would be implemented concurrently during the years in which both are updated (56 FR 67677). The ASC payment rates and the ASC procedure list were updated concurrently for the first time effective for ASC services furnished beginning December 31, 1991. Because of the OBRA '93 freeze on the ASC payment rates for fiscal year 1995, the ASC payment rate update notice will not be published this year although we will instruct our carriers to adopt the fiscal year 1995 hospital inpatient PPS wage index, published in the **Federal Register** on September 1, 1994 (59 FR 45330), to adjust payment rates for regional wage differences.

II. Provisions of the Proposed Notice

In the proposed notice, which was published December 14, 1993 (58 FR 65357), we proposed specific procedures for addition to or deletion from the ASC list. These proposed changes were the result of our consideration of data on site of service from the National Claims History File (NCHF) and general correspondence received from the public and medical community over the few years preceding publication of the proposed notice. (The NCHF is a database maintained by our Bureau of Data Management and Strategy. The data in the NCHF are derived from 100 percent of the Medicare Part A and Part B claims processed.) For each proposed addition, we proposed a payment group based on payment rates for codes on the existing ASC list, and in the same Physicians' Current Procedural Terminology (CPT) grouping, that are similar in surgical method and resource consumption. (The CPT is published annually by the American Medical Association.)

With the advice of our medical staff, we proposed to add surgical procedures that are performed in ASCs and meet certain standards contained in existing regulations. We also proposed to modify our criteria for deleting procedures from the ASC list. As the practice of medicine has changed over the years, procedures that were at one time commonly performed on an inpatient basis gradually have shifted to the hospital outpatient department (OPD) as the most common site of service, and a few eventually have shifted to the physician's office as the primary site of service. Procedures that are not performed on an inpatient basis or are primarily performed in a physician's

office no longer meet the conditions specified in regulations. This development results in a corresponding change in claims data to lower inpatient and higher physician's office site-of-service performance percentages, and these procedures no longer meet our 20/50 site-of-service criteria. By 20/50 site-of-service criteria, we mean that if a procedure is performed on an inpatient basis 20 percent of the time or less, or in a physician's office 50 percent of the time or more, it should not be covered when performed in an ASC. We may make exceptions and override the criteria if we believe the data are inaccurate or if there are medical reasons to override the data.

If we had strictly applied the 20/50 criteria to our current ASC list without making exceptions, we would have been proposing deletion of a number of procedures, such as cataract removal, that we believe are appropriate to the ASC setting. We were also concerned with what might be termed a ''ping-pong'' situation; that is, adding a procedure during one update with 49 percent physician's office performance and then deleting it during the next update if it reached 51 percent physician's office performance. Consequently, we proposed the following criteria for deleting a procedure from ASC coverage: The combined inpatient, OPD, and ASC site-of-service percentage is less than 46 percent of the total volume; and either—

- The procedure is performed 50 percent of the time or more in a physician's office; or
- The procedure is performed 10 percent of the time or less in an inpatient hospital setting.

This proposed change would allow the site of service for procedures in the physician's office to grow from below 50 percent (when it is added) to as high as 54 percent, as long as the percentage of time the procedure is performed in a facility with a dedicated operating room remains at 46 percent. Similarly, the criteria allow procedures to move from an inpatient hospital site of service to an OPD site of service and still remain on the ASC list. To determine whether a procedure should be *added* to the ASC list, we indicated that we would continue to use the 20/50 site-of-service criteria.

We incorporate annual revisions of the CPT into our list of procedures covered in an ASC. Therefore, we also proposed for public comment the procedure codes that were added to or deleted from the ASC list through changes to the Medicare Carriers Manual as a result of updates of the 1992 and 1993 editions of the CPT.

In addition, we proposed to remove from the ASC list five CPT codes that involve procedures relating to the usage of implantable infusion pumps not covered by Medicare.

III. Analysis of and Responses to Public Comments

In our December 1993 proposed notice, we requested comments on the proposed quantitative change in our deletion criteria; the development of alternatives to the proposed quantitative deletion criteria; proposed additions to and deletions from the ASC list; and the assignment of payment groups for each addition. In response, we received 558 timely public comments from 191 urologists, 107 ASCs, 52 anesthesiologists, 50 patients, 30 ophthalmologists, 26 psychiatrists, 28 plastic surgeons, 14 obstetrician/gynecologists, 8 gastroenterologists, 6 dermatologists, 19 professional/medical societies, and 27 others (that is, neurologists, attorneys, radiologists, a Medicare director, a podiatrist, an accountant, otolaryngologists, a supplier, and an oncologist). A summary of these comments and our responses to them follows:

Criteria for Determining Procedures for Coverage in an ASC

In our December 1993 proposed notice, we announced our intention to apply alternative utilization threshold criteria for deleting procedures from ASC coverage. That is, rather than deleting procedures that fall below the current coverage threshold, we proposed alternative criteria for deleting procedures that examine the incidence of dedicated operating room use (combined ASC, OPD, and inpatient site-of-service utilization) in determining if a procedure that has dropped below the 20 percent inpatient criteria should remain covered in an ASC. We specifically solicited comments on the alternative criteria. However, we did not receive any comments on this issue.

In addition, we requested comments on developing alternatives to the quantitative criteria we currently use in developing the ASC list. We received 64 comments regarding our current site-of-service-based criteria. The commenters included 35 ASCs, 16 urologists, 4 anesthesiologists, and 9 professional societies.

Comment: Several commenters stated that our criteria are outdated, reflecting a period when surgery was rarely performed on an outpatient basis. They noted an absence of scientific or medical literature supporting the thresholds used. Therefore, they believed the criteria are arbitrary.

Response: The inpatient and physician's office utilization thresholds serve as a reasonable interpretation of the statutory language ''appropriately performed on an inpatient basis.'' That is, we believe that if a procedure is performed at least 20 percent of the time on an inpatient basis and no more than 50 percent of the time in a physician's office, we can reasonably regard the procedure as appropriate to the inpatient setting. Section 1833(i)(1) of the Act requires the Secretary to ''specify those surgical procedures which are appropriately (when considered in terms of the proper utilization of hospital inpatient facilities) performed on an inpatient basis in a hospital but which also can be performed safely on an ambulatory basis'' in an ASC. Thus, section 1833(i)(1) of the Act is clear that procedures included on the ASC list of covered procedures must be those that are appropriately performed on an inpatient basis.

In developing regulations that implemented section 1833(i)(1) of the Act, we prepared the criteria set forth at 42 CFR 416.65 (''Covered surgical procedures''). Those regulations specify conditions for coverage of procedures that are commonly performed on an inpatient basis but may be safely performed on an outpatient basis. These conditions include requirements such as operating room time not exceeding 90 minutes, recovery period not exceeding 4 hours, limited blood loss, and limited invasion of body cavities. We believe that these criteria reasonably meet the conditions set forth in the legislation.

For several years, we used only the qualitative criteria described in the regulations. We added procedures to the list based on physicians' review of procedures recommended by medical organizations. This system resulted in only a limited number of procedures being added to the ASC list.

Patient variability made it difficult for our physicians to accurately determine procedures that should be added to the list, especially procedures that are close to the cut-off of the qualitative criteria; for example, a surgery time of 2 hours or a recovery time of 4½ hours. A given procedure varies with patient condition. That is, a procedure that may be accomplished in 90 minutes for one patient may take 120 minutes for another.

In developing the 1987 update of the ASC list, we determined that a numerical threshold based on site of service should be used to assist us in implementing section 1833(i)(1) of the

Act. We believed criteria based on site of service, as shown in our current claims data, would yield a range of procedures for review by our staff of physicians to include on the ASC list. In this way, we would have support for the addition of procedures physicians generally perform on an inpatient basis. Our physicians then review the complete list of procedures that meet the threshold criteria and determine which meet the qualitative criteria in our regulations.

We acknowledge that utilization of outpatient surgical settings has increased considerably since we first initiated the threshold criteria in 1987. For this reason, we proposed altering the criteria for deleting procedures from the ASC covered procedures list. We thus recognize some movement to the outpatient setting without eliminating coverage. However, once a procedure is performed in a physician's office the majority of the time and does not require the setting of an ASC, OPD, or inpatient hospital 46 percent of the time, we believe that section 1833(i)(1) of the Act requires that we delete ASC coverage of the procedure.

When preparing the December 1993 proposed notice, we considered policy alternatives and discussed reverting to physician judgment exclusively. However, we believe that this option is too subjective, leaving policy decisions solely to the discretion of a few. If we were challenged by another physician's opinion, we could be presented with the situation of two equally qualified professionals with different opinions. Thus, we believe that some objective criteria are essential in determining coverage of procedures in an ASC.

Comment: Some commenters believed that the Common Working File (CWF) is inadequate for assessing site of service. (The CWF is a Medicare Part A and Part B benefit coordination and prepayment claims validation system that uses localized databases maintained by designated carriers. The CWF indicates site of service for surgical procedures.) The commenters believed that the data produced are skewed, especially for periods before the last 2 years when site-of-service data had been emphasized. They stated that CPT coding practices vary greatly, resulting in the same procedure being coded differently in different areas.

Response: We acknowledge that the early data using site-of-service codes contained errors. Those data may have skewed results, particularly for low-volume procedures or procedures near the threshold levels. Consequently, our criteria allow for exceptions if the data appear flawed, or our physicians, after consultation with medical societies and local experts, believe a procedure is appropriate to the inpatient setting despite the data. Under this exceptions authority, we have retained procedures such as cataract extractions, which have not met the inpatient criterion for several years. In addition, the public has an opportunity to comment, through our rulemaking process, on what they believe are errors in the data.

With regard to the issue of varying CPT coding practices, we acknowledge that not all physicians code a particular procedure identically. Unfortunately, this variation in coding is often the result of an attempt to maximize Medicare payment to the physician for the procedure, rather than the result of ambiguous coding guidelines. While this upcoding occasionally affects the ASC list, we attempt to identify these situations and retain the procedure on the ASC list through the exceptions authority if the procedure is appropriate to the inpatient setting. We ask physicians to encourage their peers to code procedures appropriately to avoid these situations.

Comment: One commenter believed we should use a 10 percent inpatient criterion for adding procedures to the list. The commenter also suggested that any procedure generally requiring the prior or concurrent administration of general, spinal, or regional anesthesia, or of sedation or analgesia sufficient to compromise a patient's protective reflexes, be included on the ASC list regardless of utilization data.

Response: The type of anesthesia necessary for a given procedure varies among patients. Some patients have very low pain thresholds, special psychological needs, or anatomical conditions warranting a higher level of anesthesia than others. We encourage every physician to use his or her judgment in selecting the appropriate anesthesia. We do not encourage the use of anesthesia in settings not appropriately equipped for emergency situations.

The need for an operating room setting for a particular patient is not equivalent to a procedure meeting the conditions of section 1833(i)(1) of the Act for ASC coverage. As discussed above, section 1833(i)(1) requires that we cover procedures in an ASC only if they are appropriately performed on an inpatient basis. Thus, if a patient requires a higher degree of anesthesia than is reflected in the utilization data, that procedure would be covered in an OPD, or, if necessary, in an inpatient hospital setting.

We had considered revising the criterion for adding procedures on the ASC list to 10 percent inpatient utilization. However, we believe that the current threshold of 20 percent represents a reasonable portion of use necessary to meet the statutory requirement of appropriately performed on an inpatient basis.

Comment: One commenter believed that our physician's office threshold should focus on the percentage of physicians performing the procedure in the office, rather than the percentage of procedures being performed in the office.

Response: We do not believe that the percentage of physicians performing a procedure in their offices, rather than the total site-of-service utilization data, is preferable for determining ASC coverage. Many physicians perform a given procedure only once or twice during the year. These physicians are not likely to maintain the specialized equipment necessary to perform the procedure in their offices, and, therefore, are not likely to perform it in that location. Also, a particular physician may not be proficient with the procedure and may desire to perform the procedure where there are resources available, should a mishap occur.

We do not believe that a large percentage of physicians performing a few procedures should serve as the basis for determining whether a procedure meets the conditions of section 1833(i)(1) of the Act. It is difficult to ignore the data indicating a procedure is commonly performed in a physician's office, if only relatively few physicians perform the majority of the procedures, in favor of those physicians performing the same procedure on an occasional basis. In addition, accurately determining the percentage of physicians performing a procedure in their offices would be extremely difficult.

Comment: One commenter believed that the criteria result in a competitive advantage to an OPD over an ASC. The commenter recommended that if a procedure can be safely performed in an OPD, it can be safely performed in an ASC and should be on the list.

Response: Section 1833(i)(1) of the Act established criteria for coverage in an ASC when the ASC services were added as a Medicare benefit in 1980. Section 1833(i)(1) of the Act requires that we develop a list of procedures covered in an ASC and base the list on procedures that are appropriately performed on an inpatient basis.

These requirements for ASC coverage are not applicable to an OPD. The original Medicare statute provided for coverage of all services furnished by an

OPD, but it did not provide for any limitations on the appropriateness of a procedure for the inpatient setting or for the establishment of a list of procedures. Consequently, it is reasonable to expect that procedures covered in an OPD will not always be the same as procedures covered by section 1833(i)(1) of the Act. For example, there is no limitation on an OPD to perform only surgical procedures. Thus, adopting the suggestion would result in a significant expansion of the ASC benefit beyond that contemplated in section 1833(i)(1).

Comment: One commenter believed that operating and recovery time usage are inaccurate indicators of the complexity of procedures, and clinical criteria should be used instead. The commenter stated that the overriding guideline should be that the patient can return home by the close of the business day.

Response: We recognize the commenter's concern that clinical criteria be considered in establishing the ASC list. However, we believe that general operating and recovery times are related to clinical criteria. That is, we do not look at operating and recovery room times on an isolated basis, but rather review the clinical information indicating that generally patients require 90 minutes or less operating time and 4 hours or less recovery time. We believe that these criteria are good indicators of a patient's ability to go home by the close of the business day. Procedures requiring longer times than those included in the criteria are unlikely to be completed within the business day. For example, we would expect that patients arrive at least 1 hour before the surgery begins. Thus, our criteria involve 6½ hours of an 8 hour work day, allowing 1½ hours leeway for any delays.

Comment: Some commenters believed that the Medicare program should allow for overnight stays in an ASC. The commenters stated that, initially, the inclusion of overnight stays could be part of a study with a Medicare review at the annual certification survey or a review by the Peer Review Organization (PRO).

Response: Section 1833(i)(i) of the Act provides for coverage of surgical procedures that, in addition to other criteria, ''can be performed safely on an ambulatory basis.'' We believe section 1833(i)(1) is clear that coverage of overnight stays under the ASC benefit is prohibited. Rather, ambulatory care implies care that is furnished with the patient going home by the end of the day. Thus, it would require a legislative change to extend Medicare ASC benefits to overnight care or recovery care.

Our Office of Research and Demonstrations has the authority to waive certain portions of the statute in order to study alternative means of furnishing or paying for services under the Medicare program. We solicit research proposals annually through a notice published in the **Federal Register**, and projects are selected on a competitive basis. ASCs are welcome to submit their research proposals for consideration under the routine solicitation process.

Comment: One commenter suggested that Medicare develop an alternative list of procedures that could be covered in an ASC upon precertification from the fiscal intermediary or the PRO. Another commenter suggested we establish ''severity levels'' that allow physician discretion for procedures and settings. The commenter believed that, as certain CPT codes are deleted from the list, the codes should continue to justify a facility fee if certain ''severity levels'' and health risks apply. The same commenter stated that these codes can be billed with a modifier or with the accompanying International Classification of Diseases, Ninth Revision, Clinical Modification (ICD–9–CM) diagnostic codes explaining the patient's condition. Yet a third commenter suggested that an ASC site of service could be justified by evaluating certain parameters. The commenter believed that an outpatient setting, rather than a physician's office, would be appropriate if certain conditions, such as intravenous therapy or expensive equipment, are involved.

Response: For a procedure to be covered in an ASC, the procedure must meet the conditions set forth in section 1833(i)(1) of the Act. That is, procedures covered in an ASC must be appropriately furnished on an inpatient basis but also can be performed safely on an ambulatory basis.

There are some patients who, because of medical conditions, may require surgery in an ASC-like setting, that is, a dedicated operating room with a recovery area and emergency equipment, etc. Although some patients may require this setting because of health status, the procedure may still not meet the conditions for ASC coverage set forth in section 1833(i)(1) of the Act. That is, a procedure that is routinely performed in a physician's office is still not appropriate for the inpatient setting, although an occasional patient requires hospitalization for the procedure. Precertification of the specific needs of the patient does not make the procedure inpatient. Rather, it means that a particular physician attests that a patient requires a more intensive setting for the procedure.

Moreover, there are no commonly accepted severity levels that we could easily accommodate in the development of the list of covered procedures for ASCs. Section 1833(i)(1) of the Act does not provide for an evaluation of individual patient conditions, such as severity, in the development of the ASC list. The list is required to reflect common practices. We would not expect physicians to perform procedures in offices not adequately equipped for the procedure. These cases should be handled in an OPD if the procedure is not on the ASC list.

Comment: One commenter stated that we should be aware that our ASC list is used by virtually all Medicaid programs in the U.S., as well as private insurers.

Response: The Medicare ASC list is not intended to be a list of all procedures performed in an ASC. Rather, it is a list of procedures that meet the requirements of section 1833(i)(1) of the Act. When we develop our list, we consider section 1833(i)(1) and the appropriateness of a given procedure for the Medicare population. For example, our list contains no pediatric procedures. Yet these procedures would be appropriate for Medicaid patients.

The Medicare program cannot be responsible for the actions of third party payers. Any programs that have decided to adopt our list should do so with appropriate modifications, keeping in mind the limitations of section 1833(i)(1) of the Act and the requirements of their customers.

Comment: Another commenter requested that we consider a list of approved procedures and minor surgeries that can be safely performed in a physician's office. The commenter believed that this list should contain no procedures requiring anesthesia or sedation of any kind.

Response: We do not believe it is appropriate to develop a list of procedures that can safely be performed in physicians' offices. Physicians' offices vary significantly in equipment and staffing. We have not established standards for physicians' offices, nor do we survey them. Because there is broad variability in these offices, the development of a list is likely to result in the exclusion of procedures that are safely performed in some locations and the unfair restriction of physicians' practices. We believe that physicians will not perform a procedure in their offices unless they maintain appropriate facilities, equipment, and staff to perform the procedure safely.

Additions to the List

The proposed list of additions in our December 1993 proposed notice received no negative comments. The few comments we received were positive and were written as an introduction to letters opposing our proposed deletions.

Additional Suggestions for Coverage

We received several comments recommending coverage for procedures not proposed for addition to the list. Some comments included procedures we addressed in the December 1993 proposed notice as having been previously considered. The following section, arranged by body system, responds to those comments.

Integumentary System

Comment: Some commenters proposed the addition of the following procedures to the list:

CPT Code	Description
15820	Blepharoplasty, lower eyelid.
15821	Blepharoplasty, lower eyelid; with extensive herniated fat pad.
18522	Blepharoplasty, upper eyelid.
15823	Blepharoplasty, upper eyelid; with excessive skin weighting down lid.

Response: We proposed to add these procedures to the ASC list in 1991. Based on our review of the public comments and the advice of our medical staff, we decided not to add these procedures to the list because they are commonly performed for cosmetic purposes. Section 1862(a)(10) of the Act prohibits payment for cosmetic surgery or expenses incurred in connection with cosmetic surgery. We recognize that there are circumstances when surgery on the eyelids is performed for noncosmetic reasons; for example, impairment of vision. Often these circumstances require a more complex procedure than a simple blepharoplasty. For that reason, we include on the ASC list all of the blepharoptosis repair codes (CPT codes 67901 through 67908). These procedures are performed less commonly for cosmetic purposes than the blepharoplasty codes.

We also reviewed the most recent data regarding site of service and noted that the blepharoplasty procedures are performed infrequently on an inpatient basis (3 to 5 percent of blepharoplasty procedures are performed on an inpatient basis). In light of this and our concern about the cosmetic nature of the procedures, we have decided against adding CPT codes 15820 through 15823 to the ASC list.

Comment: Commenters proposed the following procedures for the ASC list. All of these procedures involve removal of various size skin lesions from different anatomical locations. They are CPT codes 11400 through 11403, 11420 through 11423, 11440 through 11443 (all of which involve excision of benign skin lesions); and CPT codes 11600 through 11603, 11620 through 11623, and 11640 through 11643 (all of which involve excision of malignant skin lesions).

Response: A review of our billing data indicates that all these procedures are performed in the physician's office from 70 percent to 91 percent of the time, with most of the procedures performed 80 percent of the time in the physician's office setting. They are therefore appropriate to the physician's office and not the ASC.

Comment: One commenter proposed the following codes for addition to the ASC list:

CPT Code	Description
19200	Mastectomy, radical, including pectoral muscles, axillary lymph nodes.
19220	Mastectomy, radical, including pectoral muscles, axillary and internal mammary lymph nodes (Urban type operation).

Response: These procedures involve axillary node dissection. After consultation with physicians in the community, our medical staff believe these procedures do not meet the ASC criteria. Surgical time frequently exceeds the 90 minutes specified for ASCs in § 416.65(b)(1)(i). In addition, since these procedures have potential for greater complications, they generally require more observation time than the 4 hours specified for inclusion on the ASC list in § 416.65(b)(1)(ii). We believe these procedures are appropriately performed on an inpatient basis, and our data indicate they are both performed 90 percent of the time in the inpatient setting. Therefore, we are not adding them to the ASC list.

Comment: Commenters proposed addition of the following codes:

CPT Code	Description
19162	Mastectomy, partial; with axillary lymphadenectomy.
19240	Mastectomy, modified radical, including axillary lymph nodes, with or without pectoralis minor muscle, but excluding pectoralis major muscle.

Response: Our billing data indicate that CPT code 19162 is performed on an inpatient hospital basis 78 percent of the time, and CPT code 19240 is performed on an inpatient hospital basis 92 percent of the time. In addition, CPT code 19162 requires longer than the 4-hour recovery time requirement, and CPT code 19240 requires longer than the 90-minute operating time requirement for ASC coverage set forth at § 416.65(b)(1)(i). Therefore, they fail to meet our criteria for coverage in an ASC.

Musculoskeletal System

Comment: One commenter suggested the addition of the following codes to the ASC list:

CPT Code	Description
22110	Partial excision of vertebrae (eg, for osteomyelitis); cervical.
22114	Partial excision of vertebrae (eg, for osteomyelitis); lumbar.

Response: CPT code 22110 is performed 80 percent of the time on an inpatient basis; and CPT code 22114, 94 percent. CPT codes 22110 and 22114 are not appropriate for the ASC setting because the procedures require extensive dissection and a recovery time of more than 4 hours.

Comment: One commenter proposed CPT code 29848 (arthroscopy, wrist with release of transverse carpal ligament) for addition to the ASC list.

Response: CPT code 29848 is performed 8 percent of the time on an inpatient basis and does not meet our 20 percent inpatient criterion.

Respiratory System

Comment: One commenter proposed the addition of the following codes to the ASC list:

CPT Code	Description
31231	Nasal endoscopy, diagnostic, unilateral or bilateral (separate procedure).
31233	Nasal/sinus endoscopy, diagnostic with maxillary sinusoscopy (via inferior meatus or canine fossa puncture).
31235	Nasal/sinus endoscopy, diagnostic with sphenoid sinusoscopy (via puncture of sphenoidal face or cannulation of osteum).

Response: CPT codes 31233 and 31235 were replacement codes to codes previously on the ASC list. They were cross-referred from existing codes in the 1994 CPT, and both have been added to the list by our manual instructions. (These procedures are listed in Addendum C, part 6, at the end of this notice.) We are not adding CPT code 31231 to our list because it replaced

CPT code 31250. This procedure was performed 90 percent of the time in the physician's office setting, thus failing to meet our criterion for inclusion on the ASC list.

Digestive System

Comment: Two commenters proposed the following codes for addition to the ASC list:

CPT Code	Description
43030	Cricopharyngeal myotomy.
43830	Gastrostomy, temporary (tube, rubber or plastic) (separate procedure).

Response: CPT code 43030 is performed 79 percent of the time on an inpatient basis, and CPT 43830 is performed 90 percent of the time on an inpatient basis. There is concern about complications with these procedures, and both also require a 23-hour observation period before discharge. They are therefore not appropriate to the ASC list.

Comment: Commenters proposed adding the following 19 gastrointestinal endoscopy codes that were new CPT codes January 1, 1994: CPT codes 43205, 43216, 43244, 43248, 43250, 43259, 43261, 43458, 44365, 44376, 44377, 44378, 44394, 44500, 45308, 45309, 45338, 45339, and 45384. Some of the codes involved editorial changes of existing CPT procedures, and some were new CPT procedures.

Response: We have added 12 of these 19 gastrointestinal codes to the ASC list by our manual instructions. They are CPT codes 43216, 43248, 43250, 43261, 43458, 43465, 44394, 45308, 45309, 45338, 45339, and 45384. These 12 CPT codes with their descriptions are listed in Addendum C, part 6, at the end of this notice. We were able to cross-refer CPT codes deleted from our ASC list (which were identified in Appendix B of the 1994 CPT, a summary of additions, deletions, and revisions applicable to CPT 1994 codes) to these 12 codes. These codes were replacement codes to codes previously on the ASC list. They were cross-referred from existing codes in the 1994 CPT and have been added to the list by our manual instructions.

With this notice, we are also adding from Appendix B of the CPT another code that meets our criteria, CPT code 43259 (Upper gastrointestinal endoscopy including esophagus, stomach, and either the duodenum and/or jejunum as appropriate; with endoscopic ultrasound examination). We are not, however, adding CPT codes 43205 (Esophagoscopy, rigid or flexible; with band ligation of esophageal varices) and 43244 (Upper gastrointestinal endoscopy including esophagus, stomach, and either the duodenum and/or jejunum as appropriate; with band ligation of esophageal and/or gastric varices) because the treatment of varices risks complications of severe, sudden bleeding, which may require an immediate blood transfusion or the introduction of a special tube to control the bleeding. These remedies would not necessarily be available as quickly in the ASC setting. If complications develop, the patient might require air evacuation to the hospital setting. Also, the medical community does not fully accept the use of band ligation in the treatment of varices because its success and comparison to the standard treatment is yet to be completed.

We are not adding the following CPT codes to the ASC list:

CPT Code	Description
44376	Small intestinal endoscopy, enteroscopy beyond second portion of duodenum, including ileum; diagnostic, with or without collection of specimen(s) by brushing or washing (separate procedure).
44378	Small intestinal endoscopy, enteroscopy beyond second portion of duodenum, including ileum; with control of bleeding, any method.
44500	Introduction of long gastrointestinal tube (eg, Miller-Abbott) (separate procedure).

These procedures require that an endoscopy tube be passed through the gastrointestinal system while the patient waits 4 to 6 hours before the physician performs the endoscopic study. The patient would need to be in the ASC from 6 to 10 hours. We believe that this extended time period for the procedure exceeds the spirit, if not the letter, of the regulations set forth at § 416.65(b), which establish 5 1/2 hours as a maximum procedure/recovery time. In conclusion, our medical consultants have determined that CPT codes 43205, 53244, 44376, 44378, and 44500 are not appropriate for Medicare patients in the ASC setting.

Comment: Commenters proposed adding CPT code 45330 (flexible sigmoidoscopy) to the ASC list.

Response: This procedure is performed 73 percent of the time in the physician's office and is appropriate to that setting. Therefore, it does not meet the criteria for the ASC list and will not be added.

Urinary System

Comment: One commenter recommended CPT code 51040 (cystostomy tube replacement) for addition to the ASC list.

Response: This procedure meets our criteria and will be added to the ASC list (see Addendum B).

Comment: One commenter proposed CPT code 51715 (injection of implant material into the urethra) for addition to the ASC list.

Response: CPT code 51715 is a new CPT code effective January 1, 1994. This procedure was previously coded as ''unlisted'' and was not covered under any other procedure on the ASC list. Our medical staff are knowledgeable of this procedure, and we therefore do not require a year of billing data to make a determination. Our medical staff advise us that this is a physicians' office procedure, and it is not appropriate to add it to the ASC list.

Comment: One commenter suggested CPT code 51845 (abdomino-vaginal vesical neck suspension) for addition to the ASC list.

Response: CPT code 51845 is performed on an inpatient basis 92 percent of the time. Generally, there is also a 23-hour observation period before discharge. Thus, it exceeds our criterion for the 4-hour recovery time in § 416.65(b)(1)(ii). We are, therefore, not adding it to the ASC list.

Comment: Commenters proposed CPT code 52450 (transurethral incision of prostate) for addition to the ASC list.

Response: CPT code 52450 is performed 1 percent of the time in a physician's office and 70 percent of the time on an inpatient basis. It thus meets our criteria and will be added to the ASC list.

Comment: Commenters proposed the addition to the ASC list of CPT code 52601 (transurethral resection of the prostate (TURP)) when a laser is used.

Response: CPT code 52601 does not specify use of a laser in its coding description. Thus, the code represents TURPs done by all methods, and it is not possible to identify those performed by laser. CPT code 52601 is commonly performed on an inpatient basis with a 94 percent inpatient hospital site of service. Most cases require over 4 hours recovery time, and, thus, the procedure does not meet our criteria for coverage in an ASC in § 416.65(b)(1)(ii). Should the CPT develop a new laser TURP code, we would consider this procedure's appropriateness in the ASC.

Male Genital System

Comment: One commenter suggested the addition of radioactive seed implantation to treat prostate cancer.

Response: There is presently no single surgical procedure code in the CPT describing this procedure and

consequently no billing data to determine site of service. We are uncertain which code or codes the commenter is using when performing this procedure, but we understand the procedure is often used in conjunction with a radiology code. Radiology codes cannot be included in our ASC list because the ASC list is restricted to surgical codes in the surgery section of the CPT.

Comment: Commenters proposed the addition of the following codes:

CPT Code	Description
54400	Insertion of penile prosthesis; non-inflatable (semi-rigid).
54401	Insertion of penile prosthesis; inflatable (self-contained).
54405	Insertion of inflatable (multi-component) penile prosthesis, including placement of pump, cylinders, and/or reservoir.
54407	Removal, repair, or replacement of inflatable (multi-component) penile prosthesis, including pump and/or reservoir and/or cylinders.

Response: When we previously solicited public comment on penile prostheses implant procedures, we received comments unanimously opposed to the addition of these codes to the list. Commenters indicated that these procedures were inappropriate for the Medicare population in the ASC setting. The procedure recovery time exceeds the 4-hour limit, the maximum allowed for coverage in an ASC. Surgeons performing these procedures reported a recovery time of 24 to 72 hours.

We have given careful consideration to adding these procedures, based on the new comments we received favoring their addition. One commenter, who previously had written in strong opposition, stated that penile prostheses implants should be added to the list since some patients recover in less than 24 hours. Since our regulations indicate a 4-hour recovery limit, we have determined that these procedures remain inappropriate for the Medicare population in an ASC and should not be added to the list.

Laparoscopy/Peritoneoscopy/Hysteroscopy

Comment: One commenter proposed the following codes for addition to the ASC list:

CPT Code	Description
56308	Laparoscopy, surgical; with vaginal hysterectomy with or without removal of tube(s), with or without removal of ovary(s) (laparoscopic assisted vaginal hysterectomy).
56309	Laparoscopy, surgical; with removal of leiomyomata subserosal (single or multiple).

Response: CPT code 56308 is performed on an inpatient basis 91 percent of the time. This procedures involves cutting a hole in the pelvis floor and the severing of major arteries and veins. It also requires longer than 4 hours recovery time. We are therefore not adding it to the ASC list. CPT code 56309 meets our criteria and will be added to the list (see Addendum B).

Comment: Commenters wrote proposing that the following laparoscopic cholecystectomy procedure codes be added to the ASC list (21 commenters for CPT code 56340, 18 for CPT code 56341, and 17 for CPT code 56342, respectively):

CPT Code	Description
56340	Laparoscopy, surgical; cholecystectomy (any method).
56341	Laparoscopy, surgical; cholecystectomy with cholangiography.
56342	Laparoscopy, surgical; cholecystectomy with exploration of common duct.

Response: The medical information available indicates laparoscopic cholecystectomy usually requires a 23-hour observation period or an inpatient stay, and, therefore, exceeds the 4-hour recovery time requirement in § 416.65(b)(1)(ii). Therefore, we are not adding it to the list.

Comment: Commenters also proposed the addition of the following codes to the ASC list:

CPT Code	Description
56316	Laparoscopy, surgical; repair of initial inguinal hernia.
56317	Laparoscopy, surgical; repair of recurrent inguinal hernia.

Response: These procedures meet our criteria and will be added to the list (see Addendum B).

Comment: One commenter proposed the following codes for addition to the ASC list:

CPT Code	Description
56351	Hysteroscopy, surgical; with sampling (biopsy) of endometrium and/or polypectomy, with or without D & C.
56356	Hysteroscopy, surgical; with endometrial ablation (any method).

Response: These procedures meet our criteria and will be added to the list (see Addendum B).

Nervous System

Comment: Commenters proposed that we add to the ASC list the following nerve injection codes: CPT codes 62298, 64400, 64402, 64405, 64408, 64412, 64413, 64418, 64425, 64435, 64440, 64441, 64445, 64450, 64505, and 64508.

Response: According to our claims data, most of these procedures are performed less than 20 percent of the time on an inpatient basis and over 50 percent of the time in a physician's office (most being performed over 70 percent of the time in a physician's office). The exceptions are CPT codes 62298 and 64425, which meet the physician's office criterion but are performed less than 20 percent of the time in the inpatient setting, and CPT code 64508, which meets the inpatient criterion but is performed over 50 percent of the time in a physician's office. Since all these nerve injection codes fail to meet at least one of the criteria for addition, we are not adding them to the ASC list.

Comment: One commenter proposed the addition of CPT code 64421 (injection of intercostal nerves).

Response: CPT code 64421 is performed 31 percent of the time in a physician's office and 22 percent of the time on an inpatient basis. This procedure thus meets our criteria and will be added to the list (see Addendum B).

Comment: Two commenters proposed the addition to the ASC list of CPT code 64612, and one commenter proposed CPT code 64613. The descriptions of these CPT codes follow:

CPT Code	Description
64612	Destruction by neurolytic agent (chemodenervation of muscle endplate); muscles enervated by facial nerve (eg, for blepharospasm, hemifacial spasm).
64613	Destruction by neurolytic agent (chemodenervation of muscle endplate); cervical spinal muscles (eg, for spasmodic torticollis).

Response: CPT code 64612 is performed in the physician's office 84 percent of the time, and CPT code 64613

is performed in the physician's office 74 percent of the time. Thus, the codes fail to meet the criteria for our list.

Eye and Ocular Adnexa

Comment: One commenter proposed the addition of CPT code 65770 (keratoprosthesis).

Response: CPT code 65770 is performed 10 percent of the time in a physician's office and 62 percent of the time on an inpatient basis. This procedure thus meets our criteria and will be added to the list (see Addendum B).

Comment: Several commenters suggested adding CPT code 65772 (corneal relaxing incision for correction of surgically induced astigmatism), and one suggested adding code CPT code 65775 (corneal wedge resection for correction of surgically induced astigmatism).

Response: Neither procedure meets our inpatient criterion. CPT codes 65772 is performed 1 percent of the time on an inpatient basis, and CPT code 65775 is performed 3 percent of the time on an inpatient basis. Therefore, we are not adding them to the ASC list.

Comment: Commenters proposed the addition of the following CPT codes:

CPT Code	Description
65855	Trabeculoplasty by laser surgery, one or more sessions (defined treatment series).
66761	Iridotomy/iridectomy by laser surgery (eg, for glaucoma) (one or more sessions).
67145	Chemodenervation of extraocular muscle.
67210	Destruction of localized lesion of retina (eg, maculopathy, choroidopathy, small tumors), one or more sessions; photocoagulation (laser or xenon arc).
67228	Destruction of extensive or progressive retinopathy (eg, diabetic retinopathy), one or more sessions; photocoagulation (laser or xenon arc).

Commenters stated that these codes are already performed from 25 percent to 40 percent of the time in the OPD, and their failure to meet the 20 percent inpatient criterion should not preclude their addition to the ASC list.

Response: A review of our most recent billing data indicates that none of these procedures is performed 40 percent of the time in the OPD; rather, they are performed from 14 percent to 30 percent of the time in the OPD. However, each of these procedures is performed from 58 percent to 79 percent of the time in a physician's office. Since these procedures not only fail to meet the 20 percent inpatient criterion but also the 50 percent physician's office criterion, they will not be added to the ASC list.

Comment: One commenter proposed the following CPT codes for addition to the list:

CPT Code	Description
65125	Modification of ocular implant (eg, drilling receptacle for prosthesis appendage) (separate procedure).
65860	Severing adhesions of anterior segment, laser technique (separate procedure).
66172	Fistulization of sclera for glaucoma; trabeculectomy ab externo with scarring from previous ocular surgery or trauma (includes injection of antifibrotic agents).
66825	Repositioning of intraocular lens prosthesis, requiring an incision (separate procedure).

Response: CPT codes 65125 and 66825 do not meet the inpatient criterion. CPT code 65125 is performed 5 percent of the time on an inpatient basis, and CPT code 66825 is performed 7 percent of the time on an inpatient basis. CPT code 65860 is performed in a physician's office 65 percent of the time. CPT code 66172 is a new code added in 1994 and is not cross-referred to a procedure currently covered in an ASC. We generally need a year of billing data before we can make a decision as to the appropriate setting for performance. Therefore, none of these codes will be added to the ASC list.

Comment: One commenter proposed the addition of CPT code 66820 (discission of secondary membraneous cataract, stab incision).

Response: CPT code 66820 is performed 5 percent of the time on an inpatient basis and 53 percent of the time in a physician's office and, thus, fails to meet our criteria and will not be added to the list.

Comment: Commenters proposed the addition of the following codes:

CPT Code	Description
67345	Chemodenervation of extraocular muscle.
67900	Repair of brow ptosis (supraciliary, mid-forehead or coronal approach).
68115	Excision of lesion, conjunctiva; over 1 cm.

Response: CPT code 67345 is a physician's office procedure, performed 85 percent of the time in that setting. CPT codes 67900 and 68115 fail to meet our inpatient criterion with only 3 percent each inpatient performance. Therefore, these codes will not be added to the ASC list.

Auditory System

Comment: Commenters proposed the addition of CPT code 69433 (tympanostomy).

Response: This procedure is performed 91 percent of the time in a physician's office. Therefore, it fails to meet the criteria for inclusion on the ASC list.

Other Procedures

Comment: One commenter proposed the use of hyperbaric medical treatment in an ASC with payment for an appropriate technical component. The commenter stated that the routine care of wounds in conjunction with the use of hyperbaric treatments is included under CPT code 99183, but this code does not include coverage of technical costs in an ASC.

Response: The Medicare list of surgical procedures covered in an ASC includes only surgical procedures listed in the surgical section of the CPT. Hyperbaric medical treatment is not surgery and is listed in the CPT under miscellaneous, special services. Thus, we cannot add it to the ASC list.

Proposed Deletions

Integumentary System

Comment: We proposed to delete nine skin lesion excision codes: CPT codes 11042, 11424, 11604, 13101, 13121, 13132, 13152, 14040, and 14041. All nine codes received comments opposing their deletion. Commenters stated that these procedures may sometimes involve complications and compromise safety in the physician's office.

Response: The physician's office site of performance for these procedures ranges from 53 percent to 71 percent. However, each of these CPT procedure codes involves a range of lesion sizes and anatomical sites. For example, CPT code 11424, representing a 3.1 to 4.0 cm. lesion, includes scalp, neck, hands, feet, and genitalia. While a 4 cm. foot or hand lesion may be excised in the physician's office, a 4 cm. lesion on the genitalia requires a higher surgical setting. Larger size lesions, especially if malignant, require the sterile environment of an operating room, extensive anesthesia, and the monitoring of patient cardiovascular parameters and vital signs. Our medical staff thus believe the commenters are correct that our site-of-service data for these codes are deceptive.

As we have stated earlier in this notice and in previous notices, we may occasionally make an exception to our general criteria, if, based on the advice of our medical staff, we believe that the site-of-service data are deceptive. We

are making an exception to the criteria and retaining all the referenced skin lesion codes, based on the recommendation of our medical staff and consultants.

Cardiovascular System

Comment: Commenters opposed the deletion of the following codes:

CPT Code	Description
36530	Insertion of implantable intravenous infusion pump.
36531	Revision of implantable intravenous infusion pump.
36532	Removal of implantable intravenous infusion pump.

Response: We stated in the proposed notice that the Office of Health Technology Assessment (OHTA), a component of the Public Health Service's Agency for Health Care Policy and Research, would be issuing an assessment on the safety and efficacy of infusion pumps for certain treatments and we would re-evaluate our policy on these pumps in light of that assessment. OHTA issued its assessment, and consequently we revised our manual instruction in section 60–14B of the Medicare Coverage Issues Manual. According to this revision, the former instruction limiting Medicare coverage of infusion pumps to intra-arterial pumps for certain medical conditions has been revised to include intravenous infusion pumps for a greater number of medical indications. As a result, we are not deleting CPT codes 36530, 36531, and 36532.

Comment: Several commenters were opposed to our deletion of CPT code 63750 (insertion, subarachnoid catheter with reservoir and/or pump for intermittent or continuous infusion of drug, including laminectomy) and CPT code 63780 (insertion or replacement, subarachnoid or epidural catheter, with reservoir and/or pump for drug infusion, without laminectomy).

Response: Our medical advisors state that these procedures can be performed safely, effectively, and appropriately in the ASC setting. We are therefore retaining these procedures on the list.

Urinary System

Comment: We received over 300 comments in opposition to the deletion of CPT code 52000 (cystourethroscopy (separate procedure)). Of these comments, 200 were also against deleting the following CPT codes:

CPT Code	Description
52281	Cystourethroscopy, with calibration and/or dilation of urethral stricture or stenosis, with or without meatotomy and injection procedure for cystography, male or female.
52285	Cystourethroscopy for treatment of the female urethral syndrome with any or all of the following: urethral meatotomy, urethral dilation, internal urethrotomy, lysis of urethrovaginal septal fibrosis, lateral incision of the bladder neck, and fulguration of polyp(s) of urethra, bladder neck, and/or trigone.

Most commenters opposed to the cystoscopy's deletion were urologists. The main themes mentioned by the commenters were the following: the differences in male and female cystoscopies, the differences in type of cystoscopies, diagnostic versus therapeutic cystoscopies, our deceptive data, and physician/patient access problems.

Response: Although the three cystoscopies proposed for deletion exceed our physician's office criterion, we are making an exception to this standard and retaining these codes on the list, based on the advice of our medical staff and consultants. Numerous commenters offered significant medical evidence for retention of cystoscopies on the ASC list, especially for male patients. Moreover, an exhaustive review of our data supports the commenters' belief that female cystoscopies skew the data in favor of the physician's office site of service and many CPT code 52000 cystoscopies, when performed, are upgraded to therapeutic cystoscopies and not reported under CPT code 52000.

Male Genital System

Comment: We received 136 comments in opposition to the deletion of CPT code 55700 (prostate biopsy). The following were the main themes mentioned in the comments: patient health, complications and infection, sterilization problems, and the use of the ultrasound machine.

Response: As with cystoscopies, information indicates many patients in need of a prostate biopsy have comorbidities or other complications that necessitate close monitoring. Complications of prostate biopsy can be serious. Infection and bleeding are not uncommon and, at times, warrant hospital admission.

Although prostate biopsy exceeds our physician's office criterion, we are making an exception to our standard and are retaining this procedure on the list. We base our determination on the number of comments received citing significant medical evidence, and the advice of our medical staff and consultants that prostate biopsy is an appropriate procedure for the ASC list.

Nervous System

Comment: Several commenters were opposed to our proposed deletion of the following codes:

CPT Code	Description
64442	Injection, anesthetic agent; paravertebral facet joint nerve, lumbar, single level.
64510	Injection, anesthetic agent; stellate ganglion (cervical sympathetic).

They believed these codes should not be deleted because they frequently require the standby of a crash cart, should a complication occur during injection. CPT code 64442 requires a fluoroscopy, which few physicians' offices own; CPT code 64510 may compromise the patient's airway with the inadvertent block of a laryngeal nerve with a local anesthetic; and both procedures cause patient cardiac arrhythmias in 25 percent of patients. Commenters believed our data are erroneous since the data exclude anesthesiologists from site-of-service data, and anesthesiologists are the primary physicians performing these procedures.

Response: In view of these stated medical concerns and because the inclusion of anesthesiologists in a new claims data run resulted in the two procedures falling below the 50 percent physician's office criterion, both procedures will be retained on the list.

Eye and Ocular Adnexa

Comment: We received comments in opposition to our proposed deletion of the following ophthalmologic procedures codes:

CPT Code	Description
66762	Iridoplasty by photocoagulation (one or more sessions) (eg, for improvement of vision, for widening of anterior chamber angle).
67101	Repair of retinal detachment, one or more sessions; cryotherapy or diathermy, with or without drainage of subretinal fluid.
67105	Repair of retinal detachment, photocoagulation (laser or xenon arc, one or more sessions), with or without drainage of subretinal fluid.

CPT Code	Description
67208	Destruction of localized lesion of retina (eg, maculopathy, choroidopathy, small tumors), one or more sessions; cryotherapy, diathermy.
67921	Entropion repair; suture.

Commenters were concerned that these procedures could not be performed in a physician's office without the purchase of costly equipment and they would now have to be performed in the more expensive OPD setting.

Response: The billing data on site-of-service performance for four of these five procedures (excluding CPT code 67921) range from 53 percent to 63 percent physicians' office performance. When considering the combined ASC, OPD, and inpatient hospital performances, these four procedures do not meet the new 46 percent threshold criterion; rather their combined percentages range from 37 percent to 40 percent. In view of these combined percentages, we believe we are justified in adhering to our proposed intention to delete from the ASC list CPT codes 66762, 67101, 67105, and 67208.

The fifth code, CPT code 67921, has a 45 percent combined percentage performance in the three settings. Yet, our medical staff advise us that this procedure, which involves the inversion of the border of the eyelid against the eyeball, is medically appropriate for performance in the ASC. This code is also one of a series of ophthalmological codes involving blepharoplasties mentioned both in this notice and in the previous ASC final notice published in the **Federal Register** on December 31, 1991 (56 FR 67666) as making unnecessary our coverage of integumentary system blepharoplasties, which are sometimes cosmetic. In view of these factors, we are making an exception to our criteria and are retaining CPT code 67921.

Comment: Commenters believed that four of the ophthalmic procedures proposed for removal from the list are subject to the interim practice cost reductions. They are the following CPT codes:

CPT Code	Description
66762	Iridoplasty by photocoagulation (one or more sessions) (eg, for improvement of vision, for widening of anterior chamber angle).
67101	Repair of retinal detachment, one or more sessions; cryotherapy or diathermy, with or without drainage of subretinal fluid.
67105	Repair of retinal detachment, photocoagulation (laser or xenon arc, one or more sessions), with or without drainage of subretinal fluid.
67208	Destruction of localized lesion of retina (eg, maculopathy, choroidopathy, small tumors), one ore more sessions; cryotherapy, diathermy.

The commenters stated that we should not remove any procedures subject to the interim practice cost reductions from the ASC list until the fee schedule for physicians' services accurately reflects practice costs.

Response: The commenters are correct that four of the five ophthalmic procedures (CPT codes 66762, 67101, 67105, and 67208) proposed for deletion from the ASC list are subject to the practice expense reduction. (CPT code 67921 (repair of entropion) is not subject to the practice expense reduction.)

OBRA '93 provides for an adjustment to practice expense relative value units (RVUs) for services for which practice expense RVUs exceed 128 percent of the work RVUs and that are performed less than 75 percent of the time in a physician's office setting. The 1994 practice expense RVUs are reduced by 25 percent of the amount by which the practice expense RVUs exceed the 1994 work RVUs. In 1995 and 1996, the excess, as determined for 1994, will be reduced an additional 25 percent each year. Practice expense RVUs will not be reduced to an amount less than 128 percent of the 1994 work RVUs for a service. Services performed more than 75 percent of the time in a physician's office setting are not subject to the reduction.

Services that are primarily performed in a physician's office setting are subject to a payment limit, called the site-of-service limitation, if they are performed in an inpatient hospital or OPD setting. For these procedures, the practice expense RVUs are reduced by 50 percent. The limitation on the practice expense RVUs reflects lower practice costs incurred in the OPD. Procedures on the approved ASC list are automatically excluded from this site-of-service limitation.

We disagree that it is inappropriate to apply the site-of-service limitation to procedures subject to the practice expense reduction. These are two separate limitations established for different purposes. The practice expense reduction is designed to reduce the basic practice expense that has been determined by the Congress to be excessive; whereas the site-of-service limitation applies to procedures primarily performed in an office setting, when the procedures are performed in an inpatient hospital or OPD setting.

Procedures Intended for Deletion

In Addendum E of our December 1993 proposed notice, we published a list of procedures that we intended for deletion that were either recent additions to the list or had low-volume ASC performance or both. The following procedure codes in that addendum received comments.

Comment: Two commenters were opposed to the deletion of CPT code 64420, and one commenter opposed the deletion of CPT codes 65270 and 65272. The descriptions of these CPT codes follow:

CPT Code	Description
64420	Injection, anesthetic agent; intercostal nerve single.
65270	Repair of laceration; conjunctiva, with or without nonperforating laceration sclera, direct closure.
65272	Repair of laceration; conjunctiva, by mobilization and rearrangement, without hospitalization.

Response: We are retaining these procedures on our list, but we restate our intention to delete them in our next biennial update should they continue to fail to meet our criteria.

Assignment of Payment Groups

Comment: Three commenters disagreed with the proposed payment group assignment of CPT code 66180 (aqueous shunt to extraocular reservoir, (eg, Molteno, Schocket, Denver-Krupin)) to payment group 4. Two commenters, both physicians, recommended that the procedure be placed in payment group 7 because of the time required to perform the procedure and other factors related to postoperative recovery. One commenter, a professional society, compared the procedure in terms of complexity to a scleral buckling procedure for retinal detachment (CPT code 67107) or the placement of a radioactive implant for an ophthalmic malignancy (CPT 67218), both of which are assigned to payment group 5.

Response: After consultation with our medical advisor, we concur with the professional society that CPT code 66180 more closely resembles procedures currently in payment group 5 in terms of time and resource consumption than it does those in payment group 4 or in payment group 7. We have therefore assigned this procedure to payment group 5. Payment for the aqueous shunt itself (HCFA

Common Procedure Coding System (HCPCS) code L8612) is not a part of the facility fee, but rather is made separately under Medicare Part B.

Comment: A dozen commenters disagreed with the assignment of CPT code 58990 (hysteroscopy, diagnostic) to payment group 1, recommending that it be placed in payment group 3.

Response: CPT code 58990 was added as a payment group 1 procedure to the list of Medicare-covered ASC procedures, effective for services furnished beginning on January 30, 1992. CPT code 58990 was replaced by CPT code 56350 (hysteroscopy, diagnostic (separate procedure)) in the 1993 CPT, and CPT code 58990 was deleted from both the CPT and the ASC list. Because this change constituted essentially an editorial rather than a substantive revision, we retained CPT code 56350 in payment group 1, the same payment group to which its predecessor, CPT code 58990, had been assigned. CPT code 56350 is on the list of procedures for which we are collecting resource cost data in Part II of the Medicare ASC survey, and its payment group assignment, along with that of all other procedures on the list of Medicare-covered ASC procedures, will be reevaluated within the context of the survey data. In the interim, CPT code 56350 will remain in payment group 1.

Additional Information

We received several dozen comments on payment issues that were not raised in our December 1993 proposed notice. Primarily, commenters recommended placing CPT codes that are currently on the ASC list in a higher payment group. A few commenters expressed disappointment over the lack of a payment rate update for inflation as a result of the 2-year freeze enacted by the Congress in OBRA '93.

As indicated in our December 1993 proposed notice, we are deferring changes of payment group assignments for individual procedures on the current ASC list pending completion of Part II of the Medicare ASC payment rate survey (Form HCFA 452B). On March 15, 1994, we mailed the Medicare ASC survey, Part II, to 320 facilities that constitute a randomly selected, representative sample of Medicare-participating ASCs. The survey collects data on facility overhead and procedure-specific costs. The payment group assignment and payment group amounts for all CPT codes on the list of Medicare-covered ASC procedures will be reviewed collectively, within the context of the survey data. Therefore, while we are not making any changes in existing payment group assignments in this notice, we will publish in the **Federal Register** in accordance with notice and comment procedures any changes that we propose to make on the basis of updated cost data collected in the ASC survey.

IV. Provisions of the Final Notice

We are adopting the following new quantitative criteria, suggested in our December 1993 proposed notice, for deleting a procedure from ASC coverage: The combined inpatient, OPD, and ASC site-of-service percentage is less than 46 percent of the total volume; and either—

- The procedure is performed 50 percent of the time or more in a physician's office; or
- The procedure is performed 10 percent of the time or less in an inpatient hospital setting.

This change allows the site of service for procedures in the physician's office to grow from below 50 percent (when it is added) to as high as 54 percent, as long as the proportion of time the procedure is performed in the operating room remains at 46 percent. Similarly, the criteria allow procedures to move from an inpatient hospital site of service to an OPD site of service without being deleted from the ASC list.

We are deleting 4 of the 25 procedure codes we had proposed for deletion from the ASC list in our December 1993 proposed notice. For the reasons discussed in the analysis of the public comments in section III. of this notice, we are retaining the remaining 21 codes on the ASC list. Addendum A lists the 4 CPT codes that we are deleting (with the body system and description of each procedure, according to appropriate CPT terminology). Addendum A also lists a fifth deletion, CPT code 36522 (photopheresis, extracorporeal), which was not suggested in our December 1993 proposed notice. We are deleting this code based on information from a provider that this procedure cannot be safely performed in an ASC. Our review of the billing data indicates that, although this procedure has been on the ASC list, it is performed 0 percent of the time in an ASC. It is performed 73 percent of the time on an inpatient basis and 23 percent of the time in the OPD. We are requesting public comment on the appropriateness of this deletion.

We are adding a total of 30 new procedure codes to the ASC list. These codes are listed in Addendum B with the body system and description of each procedure and the corresponding payment group. We are adding the 20 procedure codes that we had proposed for addition to the ASC list in our December 1993 proposed notice. For the reasons discussed in the analysis of the public comments in section III. of this notice, we are also adding 10 other procedure codes: CPT codes 29804, 43259, 51040, 52450, 56309, 56316, 56317, 56351, 56356, and 64421. We are requesting public comment on the appropriateness of the addition of these 10 new CPT codes and the assignment of payment groups for them since these codes were not suggested in our December 1993 proposed notice.

Further, the CPT is updated annually and some deletions and additions affect the ASC list. Parts 1 and 3 of Addendum C list CPT codes (with the body system and description of each procedure) that were deleted by changes to the Medicare Carriers Manual as a result of the update of the 1992 and 1993 editions of the CPT, respectively. We had proposed these deletions in our December 1993 proposed notice and received no comments on them. This notice makes these deletions final. Parts 2 and 4 of Addendum C list CPT codes (with the body system and description of each procedure and corresponding payment group) that were added by changes to the Medicare Carriers Manual as a result of the update of the 1992 and 1993 editions of the CPT. We had proposed these additions in our December 1993 proposed notice and received no comments on them. This notice makes these additions final. Part 5 of Addendum C lists CPT codes (with the body system and description of each procedure) that were deleted by changes to the Medicare Carriers Manual as a result of the update of the 1994 edition of the CPT. Because these codes were not suggested for deletion in our December 1993 proposed notice, we are now requesting public comment on the appropriateness of these deletions. This list of deletions differs from the Medicare Carriers Manual instruction that was effective April 11, 1994, in that we are retaining four of the nasal and sinus endoscopy codes: CPT codes 31254 through 31256 and 31267. We are retaining these codes since we anticipate that they will be reinstated by the CPT Editorial Panel effective January 1995. Part 6 of Addendum C lists CPT codes (with the body system and description of each procedure and corresponding payment group) that were added by changes to the Medicare Carriers Manual as a result of the update of the 1994 edition of the CPT. Because these codes were not suggested for addition in our December 1993 proposed notice, we are now requesting public comment on the appropriateness

of, and assignment of payment groups for, the additions.

V. Collection of Information Requirements

This document does not impose information collection and recordkeeping requirements. Consequently, it need not be reviewed by the Office of Management and Budget under the authority of the Paperwork Reduction Act of 1980 (44 U.S.C. 3501 et seq.).

VI. Regulatory Impact Statement

A. Introduction

This final notice permits facility fees to be paid when the 30 surgical procedure codes being added by this notice are performed in an ASC. We are also deleting 5 codes from the ASC list. We believe the net effect of the addition and deletion of these codes will be negligible because of the low number of changes we are making at this time and because of the relatively low cost and volume of these codes.

Payments to ASCs are generally lower than payments to hospitals for surgery performed in a hospital, whether on an inpatient or OPD basis. Although we do not anticipate that many services will shift from the hospital inpatient setting to ASCs, we anticipate some program savings because payments to ASCs for a given surgical procedure are generally lower than payments to hospitals for the same procedure. Additional savings will be realized as a result of lower payments to a hospital when newly listed procedures continue to be performed on an OPD basis, because the OPD rate (less deductible and coinsurance) would be the lower of (1) the hospital's reasonable costs or charges, or (2) a blend of the hospital's reasonable costs or customary charges and the amount that would be paid to a free-standing ASC in the same area for the same procedure. The blend is comprised of 42 percent hospital cost and 58 percent ASC payment rate. We believe payments based on the ASC blended rate are approximately 10 percent lower than payments based solely on reasonable cost. A factor that could offset some savings would be a shift of services from the physician's office to the ASC setting as a result of the expansion of the list of covered ASC services. Since a facility fee is not paid when surgery is performed in a physician's office, this shifting will result in slightly increased program costs.

The deletions to the ASC list could also result in some changes in program costs and savings depending upon whether the deleted services are shifted to the lower cost physician's office site or to the higher cost OPD setting. We do not anticipate mass shifting of the site of service associated with the procedure codes we are adding or deleting.

We believe this notice will result in no economic impact.

B. Regulatory Flexibility Act

We generally prepare a regulatory flexibility analysis that is consistent with the Regulatory Flexibility Act (RFA) (5 U.S.C. 601 through 612) unless the Secretary certifies that a notice will not have a significant economic impact on a substantial number of small entities. For purposes of the RFA, all physicians, ASCs, and hospitals are considered to be small entities.

In addition, section 1102(b) of the Act requires the Secretary to prepare a regulatory impact analysis if a notice may have a significant impact on the operations of a substantial number of small rural hospitals. This analysis must conform to the provisions of section 604 of the RFA. For purposes of section 1102(b) of the Act, we define a small rural hospital as a hospital that is located outside of a Metropolitan Statistical Area and has fewer than 50 beds.

We will delete a procedure from the ASC list only if the combined hospital inpatient, OPD, and ASC site-of-service percentage is less than 46 percent of the total volume; and either the procedure is performed 50 percent of the time or more in a physician's office, or the procedure is performed 10 percent of the time or less in an inpatient hospital setting. Because procedures will not be added or deleted as a result of slight shifts of the site of service, we believe we are adding stability to the list that should assist all small entities to plan for the future.

Therefore, for the reasons cited above, we are not preparing analyses for either the RFA or section 1102(b) of the Act since we have determined, and the Secretary certifies, that this notice will not result in a significant economic impact on a substantial number of small entities and will not have a significant impact on the operations of a substantial number of small rural hospitals.

In accordance with the provisions of Executive Order 12866, this notice was not reviewed by the Office of Management and Budget.

(Section 1833(i)(1) of the Social Security Act (42 U.S.C. 1395l(i)(1))

(Catalog of Federal Domestic Assistance Program No. 93.774, Medicare—Supplementary Medical Insurance Program)

Dated: October 28, 1994.

Bruce C. Vladeck,

Administrator, Health Care Financing Administration.

Dated: December 10, 1994.

Donna E. Shalala,

Secretary.

Addendum A

Deletions From the List of Covered Procedures for Ambulatory Surgical Centers

The following addendum is the final list of deletions from the ASC list. These deletions are effective April 26, 1995. In the first column is the CPT code for the procedure; and in the second column, the body system and description of the procedure. In this addendum, ''combined'' percentage refers to the total of inpatient hospital, hospital outpatient department, and ASC site-of-service percentages.

We are requesting public comments only on CPT code 36522 in Addendum A because we had not proposed this code for deletion in our December 1993 proposed notice.

CPT Code	Body system and description
	CARDIOVASCULAR SYSTEM
36522	Photopheresis, extracorporeal (73 percent inpatient, 2 percent office, 96 percent combined)
	EYE AND OCULAR ADNEXA
66762	Iridoplasty by photocoagulation (one or more sessions) (eg, for improvement of vision, for widening of anterior chamber angle) (2 percent inpatient, 59 percent office, 37 percent combined)
67101	Repair of retinal detachment, one or more sessions; cryotherapy or diathermy, with or without drainage of subretinal fluid (8 percent inpatient, 62 percent office, 37 percent combined)
67105	Repair of retinal detachment, one or more sessions; photocoagulation (laser or xenon arc, one or more sessions), with or without drainage of subretinal fluid (6 percent inpatient, 63 percent office, 36 percent combined)
67208	Destruction of localized lesion of retina (eg, maculopathy, choroidopathy, small tumors), one or more sessions; cryotherapy, diathermy (5 percent inpatient, 57 percent office, 40 percent combined)

Addendum B

Additions to the List of Covered Procedures for Ambulatory Surgical Centers

The following addendum is the final list of additions to the ASC list and the

corresponding payment groups. These additions are effective February 27, 1995. In the first column is the CPT code for the procedure; in the second column, the payment group for the procedure; and in the third column, the body system and description of the procedure.

We are requesting public comments on the appropriateness of the addition of, and assignment of payment groups for, only the following CPT codes in Addendum B because we had not suggested them for addition in our December 1993 proposed notice: CPT codes 29804, 43259, 51040, 52450, 56309, 56316, 56317, 56351, 56356, and 64421.

CPT Code	Payment group	Body system and description
		MUSCULOSKELETAL SYSTEM
20694	1	Removal, under anesthesia, of external fixation system
20910	3	Cartilage graft; costochondral
26416	3	Removal of tube or rod and insertion of extensor tendon graft (includes obtaining graft), hand or finger
26587	5	Reconstruction of supernumerary digit, soft tissue and bone
28307	4	Osteotomy, metatarsal, base or shaft, single, with or without lengthening, for shortening or angular correction; first metatarsal with autograft
28340	4	Reconstruction, toe, macrodactyly; soft tissue resection
28341	4	Reconstruction, toe, macrodactyly; requiring bone resection
28344	4	Reconstruction, toe(s); polydactyly
28345	4	Reconstruction, toe(s); syndactyly, with or without skin graft(s), each web
28456	2	Percutaneous skeletal fixation of tarsal bone fracture (except talus and calcaneus); with manipulation, each
29804	3	Arthroscopy, temporomandibular joint, surgical
		RESPIRATORY SYSTEM
31084	4	Sinusotomy frontal; obliterative, with osteoplastic flap, brow incision
		DIGESTIVE SYSTEM
43259	3	Upper gastrointestinal endoscopy including esophagus, stomach, and either the duodenum and/or jejunum as appropriate; with endoscopic ultrasound examination
49250	4	Umbilectomy, omphalectomy, excision of umbilicus (separate procedure)
		URINARY SYSTEM
51040	4	Cystostomy, cystostomy with drainage
52450	3	Transurethral incision of prostate
		MALE GENITAL SYSTEM
54015	4	Incision and drainage of penis, deep
54205	4	Injection procedure for Peyronie disease; with surgical exposure of plaque
		LAPAROSCOPY/PERITONEOSCOPY/HYSTEROSCOPY
56309	5	Laparoscopy, surgical; with removal of leiomyomata, subserosal (single or multiple)
56316	4	Laparoscopy, surgical; repair of initial inguinal hernia
56317	7	Laparoscopy, surgical; repair of recurrent inguinal hernia
56351	3	Hysteroscopy, surgical, with sampling (biopsy) of endometrium and/or polypectomy, with or without D & C
56356	4	Hysteroscopy, surgical; with endometrial ablation (any method)
		FEMALE GENITAL SYSTEM
56441	1	Lysis of labial adhesions
		NERVOUS SYSTEM
62275	1	Injection of anesthetic substance (including narcotics), diagnostic or therapeutic; epidural, cervical or thoracic, single
64421	1	Injection, anesthetic agent; intercostal nerves, multiple, regional block
		EYE AND OCULAR ADNEXA
65770	7	Keratoprosthesis
66180	5	Aqueous shunt to extraocular reservoir, (eg, Molteno, Schocket, Denver-Krupin)
66185	2	Revision of aqueous shunt to extraocular reservoir
67340	4	Strabismus surgery involving exploration and/or repair of detached extraocular muscle(s)

Addendum C

1. Deletions From the List of Covered Procedures for Ambulatory Surgical Centers, Deleted From the 1992 CPT

The CPT is updated annually, and some additions and deletions affect the ASC list. The following part 1 of this addendum is the list of procedures that were deleted from the ASC list because they were deleted from the 1992 CPT. These deletions were effective March 31, 1992. In the first column is the CPT code for the procedure; and in the second column, the body system and description of the procedure.

CPT code	Body system and description
	INTEGUMENTARY SYSTEM
15410	Free transplantation of skin flap by microsurgical technique, including microvascular anastomosis; 100 sq cm or less
15412	Free transplantation of skin flap by microsurgical technique, including microvascular anastomosis, between 101 and 160 sq cm
15414	Free transplantation of skin flap by microsurgical technique, including microvascular anastomosis; between 161 and 230 sq cm
15416	Free transplantation of skin flap by microsurgical technique, including microvascular anastomosis; over 230 sq cm
15500	Formation of tube pedicle without transfer or major ''delay'' of large flap without transfer; on trunk
15505	Formation of tube pedicle without transfer or major ''delay'' of large flap without transfer; on scalp, arms, or legs
15510	Formation of tube pedicle without transfer, or major ''delay'' of large flap without transfer; on forehead, cheeks, chin, mouth, neck, axillae, genitalia, hands, or feet
15515	Formation of tube pedicle without transfer, or major ''delay'' of large flap without transfer; on eyelids, nose, ears, or lips
15540	Primary attachment of open or tubed pedicle flap to recipient site requiring minimal preparation; to trunk
15545	Primary attachment of open or tubed pedicle flap to recipient site requiring minimal preparation; to scalp, arms, or legs
15550	Primary attachment of open or tubed pedicle flap to recipient site requiring minimal preparation; to forehead, cheeks, chin, mouth, neck, axillae, genitalia, or hands, feet
15555	Primary attachment of open or tubed pedicle flap to recipient site requiring minimal preparation; to eyelids, nose, ears, or lips
15700	Excision of lesion and/or excisional preparation of recipient site and attachment of direct or tubed pedicle flap; trunk

CPT code	Body system and description
15710	Excision of lesion and/or excisional preparation of recipient site and attachment of direct or tubed pedicle flap; scalp, arms, or legs
15720	Excision of lesion and/or excisional preparation of recipient site and attachment of direct or tubed pedicle flap; forehead, cheeks, chin, mouth, neck, axillae, genitalia, hands or feet
15730	Excision of lesion and/or excisional preparation of recipient site and attachment of direct or tubed pedicle flap; eyelids, nose, ears, or lips
15954	Excision, trochanteric pressure ulcer, with bipedicle flap closure
15955	Excision, trochanteric pressure ulcer, with bipedicle flap closure; with ostectomy
15960	Excision, heel pressure ulcer, with primary suture
15961	Excision, heel pressure ulcer, with primary suture; with ostectomy
15964	Excision, heel pressure ulcer, with local skin flap closure
15965	Excision, heel pressure ulcer, with local skin flap closure; with ostectomy
15966	Excision, heel pressure ulcer, with other flap closure
15967	Excision, heel pressure ulcer, with other flap closure; with ostectomy
15970	Excision, leg pressure ulcer, with primary suture
15971	Excision, leg pressure ulcer, with primary suture; with ostectomy
15972	Excision, leg pressure ulcer, with local skin flap(s)
15973	Excision, leg pressure ulcer, with local skin flap(s); with ostectomy
15974	Excision, leg pressure ulcer, with muscle or myocutaneous flap closure
15975	Excision, leg pressure ulcer, with muscle or myocutaneous flap closure; with ostectomy
15980	Excision, knee pressure ulcer, with local skin flap closure
15981	Excision, knee pressure ulcer, with local skin flap closure; with ostectomy
15982	Excision, knee pressure ulcer, with other flap closure
15983	Excision, knee pressure ulcer, with other flap closure; with ostectomy
19360	Breast Reconstruction with muscle or myocutaneous flap
	RESPIRATORY SYSTEM
30820	Cryosurgery of turbinates, unilateral or bilateral
	CARDIOVASCULAR SYSTEM
36495	Insertion of implantable intravenous infusion pump or venous access port
36496	Revision of implantable intravenous infusion pump or venous access port
36497	Removal of implantable intravenous infusion pump or venous access port
	EYE AND OCULAR ADNEXA
66702	Ciliary body destruction, any method (eg, diathermy, cryotherapy, laser, dialysis)
67907	Repair of blepharoptosis; superior rectus tendon transplant

2. Additions to the List of Covered Procedures for Ambulatory Surgical Centers, Added to the 1992 CPT (Added to the Medicare Carriers Manual January 30, 1992)

The CPT is updated annually, and some additions and deletions affect the ASC list. The following part 2 of this addendum is the list of procedures that were added to the ASC list because of additions to the 1992 CPT. These procedures were added to the ASC list by the Medicare Carriers Manual and were effective January 30, 1992. In the first column is the CPT code for the procedure; in the second column, the payment group for the procedure; and in the third column, the body system and description of the procedure.

CPT code	Payment group	Body system and description
		INTEGUMENTARY SYSTEM
15570	3	Formation of direct or tubed pedicle, with or without transfer; trunk
15572	3	Formation of direct or tubed pedicle, with or without transfer; scalp, arms, or legs
15574	3	Formation of direct or tubed pedicle, with or without transfer; forehead, cheeks, chin, mouth, neck, axillae, genitalia, hands, or feet
15576	3	Formation of direct or tubed pedicle, with or without transfer; eyelids, nose, ears, lips or intraoral
19357	5	Breast reconstruction, immediate or delayed, with tissue expander, including subsequent expansion
		RESPIRATORY SYSTEM
30801	1	Cauterization and/or ablation, mucosa of turbinates, unilateral or bilateral, any method (separate procedure); superficial
30802	1	Cauterization and/or ablation, mucosa of turbinates, unilateral or bilateral, any method (separate procedure); intramural
		CARDIOVASCULAR SYSTEM
36533	3	Insertion of implantable venous access port, with or without subcutaneous reservoir
36534	2	Revision of implantable venous access port and/or subcutaneous reservoir
36535	1	Removal of implantable venous access port and/or subcutaneous reservoir
		EYE AND OCULAR ADNEXA
66700	2	Ciliary body destruction; diathermy
66710	2	Ciliary body destruction; cyclophotocoagulation
66720	2	Ciliary body destruction; cryotherapy
66740	2	Ciliary body destruction; cyclodialysis
66986	6	Exchange of intraocular lens

3. Deletions from the List of Covered Procedures for Ambulatory Surgical Centers, Deleted From the 1993 CPT

The CPT is updated annually, and some additions and deletions affect the ASC list. The following part 3 of this addendum is the list of procedures that were deleted from the ASC list because they were deleted from the 1993 CPT. These deletions were effective July 7, 1993. In the first column is the CPT code for the procedure; and in the second column, the body system and description of the procedure.

CPT Code	Body system and description
	INTEGUMENTARY SYSTEM
10141	Incision and drainage of hematoma; complicated
	MUSCULOSKELETAL SYSTEM
21455	Closed manipulative treatment by interdental fixation of closed or open mandibular fracture
23510	Treatment of open clavicular fracture, with uncomplicated soft tissue closure
23580	Treatment of open scapular fracture with uncomplicated soft tissue closure
23610	Treatment of open humeral (surgical or anatomical neck) fracture, with uncomplicated soft tissue closure
23658	Treatment of open shoulder dislocation, with uncomplicated soft tissue closure
24506	Treatment of closed humeral shaft fracture; percutaneous insertion of pin or rod
24510	Treatment of open humeral shaft fracture, with uncomplicated soft tissue closure

CPT Code	Body system and description
24531	Treatment of closed humeral supracondylar or transcondylar fracture, without manipulation; with traction (pin or skin)
24536	Treatment of closed humeral supracondylar or transcondylar fracture, with manipulation; with traction (pin or skin)
24540	Treatment of open humeral supracondylar or transcondylar fracture, with uncomplicated soft tissue closure
24542	Treatment of open humeral supracondylar or transcondylar fracture, with uncomplicated soft tissue closure, with traction (pin or skin)
24570	Treatment of open humeral epicondylar fracture, medial or lateral, with uncomplicated soft tissue closure
24578	Treatment of open humeral condylar fracture, medial or lateral, with uncomplicated soft tissue closure
24580	Treatment of closed comminuted elbow fracture (fracture distal humerus and/or proximal ulna and/or proximal radius), treatment with traction (pin or skin), without manipulation
24581	Treatment of closed comminuted elbow fracture (fracture distal humerus and/or proximal ulna and/or proximal radius), treatment with traction (pin or skin); with manipulation
24583	Treatment of open comminuted elbow fracture (fracture distal humerus and/or proximal ulna and/or proximal radius), with uncomplicated soft tissue closure
24585	Open treatment of closed or open comminuted elbow fracture (fracture distal humerus and/or proximal radius), with or without internal or external skeletal fixation
24588	Open treatment of closed or open comminuted elbow fracture (fracture distal humerus and/or proximal radius), with implants and fascia lata ligament reconstruction
24610	Treatment of open elbow dislocation, with uncomplicated soft tissue closure
24625	Treatment of open Monteggia type of fracture dislocation at elbow (fracture proximal end of ulna with dislocation of radial head), with uncomplicated soft tissue closure
24660	Treatment of open radial head or neck fracture, with uncomplicated soft tissue closure
24680	Treatment of open ulnar fracture, proximal end (olecranon process), with uncomplicated soft tissue closure
25510	Treatment of open radial shaft fracture, with uncomplicated soft tissue closure
25540	Treatment of open ulnar shaft fracture, with uncomplicated soft tissue closure
25570	Treatment of open radial and ulnar shaft fractures, with uncomplicated soft tissue closure
25610	Treatment of closed, complex, distal radial fracture (eg, Colles or Smith type) or epiphyseal separation, with or without fracture of ulnar styloid, requiring manipulation; without external skeletal fixation or percutaneous pinning
25615	Treatment of open distal radial fracture (eg, Colles or Smith type) or epiphyseal separation, with or without fracture of ulnar styloid, with uncomplicated soft tissue closure
25626	Treatment of open carpal scaphoid (navicular) fracture, with uncomplicated soft tissue closure
25640	Treatment of closed carpal bone fracture (excluding carpal scaphoid (navicular), with uncomplicated soft tissue closure, each bone
25665	Treatment of open radiocarpal or intercarpal dislocation, one or more bones, with uncomplicated soft tissue closure
26610	Treatment of open metacarpal fracture, single, with uncomplicated soft tissue closure, each bone
26655	Treatment of open carpometacarpal fracture dislocation, thumb (Bennett fracture), with or without internal or external skeletal fixation
26660	Treatment of open carpometacarpal fracture dislocation, thumb (Bennett fracture), with skeletal fixation
26680	Treatment of open carpometacarpal dislocation, other than Bennett fracture, single, with uncomplicated soft tissue closure
26710	Treatment of open metacarpophalangeal dislocation, single, with uncomplicated soft tissue closure
26730	Treatment of open phalangeal shaft fracture, proximal or middle phalanx, finger or thumb, with uncomplicated soft tissue closure, each
26744	Treatment of open articular fracture, involving metacarpophalangeal or proximal interphalangeal joint, with uncomplicated soft tissue closure, each
26780	Treatment of open interphalangeal joint dislocation, single, with uncomplicated soft tissue closure
27190	Treatment of closed sacral fracture
27192	Open treatment of closed or open sacral fracture
27195	Treatment of sacroiliac and/or symphysis pubis dislocation, without manipulation
27196	Treatment of sacroiliac and/or symphysis pubis dislocation, with anesthesia and with manipulation
27201	Treatment of open coccygeal fracture
27210	Treatment of closed iliac, pubic or ischial fracture
27504	Treatment of open femoral shaft fracture (including supracondylar), with uncomplicated soft tissue closure
27512	Treatment of open femoral fracture, distal end, medial or lateral condyle, with uncomplicated soft tissue closure
27522	Treatment of open patellar fracture, with uncomplicated soft tissue closure
27534	Treatment of open tibial fracture, proximal (plateau), with uncomplicated soft tissue closure
27564	Treatment of open patellar dislocation, with uncomplicated soft tissue closure
27754	Treatment of open tibial shaft fracture, with uncomplicated soft tissue closure
27764	Treatment of open distal tibial fracture (medial malleolus), with uncomplicated soft tissue closure
27782	Treatment of open proximal fibula or shaft fracture, with uncomplicated soft tissue closure
27790	Treatment of open distal fibular fracture (lateral malleolus), with uncomplicated soft tissue closure
27800	Treatment of closed tibia and fibula fractures, shafts; without manipulation
27802	Treatment of closed tibia and fibula fractures, shafts; with manipulation
27804	Treatment of open tibia and fibula fractures, shafts, with uncomplicated soft tissue closure (eg ''pins above and below'')
27812	Treatment of open bimalleolar ankle fracture, with uncomplicated soft tissue closure
27820	Treatment of open trimalleolar ankle fracture, with uncomplicated soft tissue closure
27844	Treatment of open ankle dislocation, with uncomplicated soft tissue closure
28410	Treatment of open calcaneal fracture, with uncomplicated soft tissue closure
28440	Treatment of open talus fracture, with uncomplicated soft tissue closure
28460	Treatment of open tarsal bone fracture (except talus and calcaneous), with uncomplicated soft tissue closure, each
28480	Treatment of open metatarsal fracture, with uncomplicated soft tissue closure, each
28500	Treatment of open fracture great toe, phalanx or phalanges, with uncomplicated soft tissue closure
28520	Treatment of open fracture, phalanx or phalanges, other than great toe, with uncomplicated soft tissue closure, each
28640	Treatment of open metatarsophalangeal joint dislocation, with uncomplicated soft tissue closure
28670	Treatment of open interphalangeal joint dislocation, with uncomplicated soft tissue closure

CPT Code	Body system and description
	RESPIRATORY SYSTEM
31719	Transtracheal (percutaneous) introduction of indwelling tube for therapy (eg, tickle tube, catheter for oxygen administration)
	FEMALE GENITAL SYSTEM
56000	Incision and drainage of perineal abscess (nonobstetrical)
56100	Biopsy of perineum (separate procedure)
56200	Perineoplasty, repair of perineum, nonobstetrical (separate procedure)
57451	Culdoscopy, diagnostic; with biopsy and/or lysis of adhesions or tubal sterilization
58980	Laparoscopy, diagnostic (separate procedure)
58984	Laparoscopy, surgical; with fulguration or excision of lesions of the ovary, pelvic viscera, or peritoneal surface by any method
58985	Laparoscopy, surgical; with lysis of adhesions
58986	Laparoscopy, surgical; with biopsy (single or multiple)
58987	Laparoscopy, surgical; with aspiration (single or multiple)
58988	Laparoscopy, surgical; with removal of adnexal structures (partial or total oophorectomy and/or salpingectomy)
58990	Hysteroscopy; diagnostic
58992	Hysteroscopy; with lysis of intrauterine adhesions or resection of intrauterine septum (any method)
58994	Hysteroscopy; with removal of submucous leiomyomata (any method)

4. Additions to the List of Covered Procedures for Ambulatory Surgical Centers, Added to the 1993 CPT (Added to the Medicare Carriers Manual January 1, 1993)

The CPT is updated annually, and some additions and deletions affect the ASC list. The following part 4 of this addendum is the list of procedures that were added to the ASC list because of additions to the 1993 CPT. These procedures were added to the ASC list by the Medicare Carriers Manual and were effective January 1, 1993. In the first column is the CPT code for the procedure; in the second column, the payment group for the procedure; and in the third column, the body system and description of the procedure.

CPT Code	Payment Group	Body system and description
		MUSCOLOSKELETAL SYSTEM
23616	4	Open treatment of proximal humeral (surgical or anatomical neck) fracture, with or without internal or external fixation, with or without repair of tuberosity(-ies); with proximal humeral prosthetic replacement
24516	4	Open treatment of humeral shaft fracture, with insertion of intramedullary implant, with or without cerclage and/or locking screws
24546	5	Open treatment of humeral supracondylar or transcondylar fracture, with or without internal or external fixation; with intercondylar extension
25520	1	Closed treatment of radial shaft fracture, with dislocation of distal radioulnar joint (Galeazzi fracture/dislocation)
25525	4	Open treatment of radial shaft fracture, with internal and/or external fixation and closed treatment of dislocation of distal radioulnar joint (Galeazzi fracture/dislocation), with or without percutaneous skeletal fixation
25526	5	Open treatment of radial shaft fracture, with internal and/or external fixation and open treatment, with or without internal or external fixation of distal radioulnar (Galeazzi fracture/ dislocation), includes repair of triangular cartilage
25574	3	Open treatment of radial and ulnar shaft fractures, with internal or external fixation; of radius or ulna
27193	1	Closed treatment of pelvic ring fracture, dislocation, diastasis or subluxation; without manipulation
27194	2	Closed treatment of pelvic ring fracture, dislocation, diastasis or subluxation; with manipulation, requiring more than local anesthesia
27501	2	Closed treatment of supracondylar or transcondylar femoral fracture with or without intercondylar extension, without manipulation
27503	3	Closed treatment of supracondylar or transcondylar femoral fracture with or without intercondylar extension; with manipulation, with or without skin or skeletal traction
27507	4	Open treatment of femoral shaft fracture with plate/screws, with or without cerclage
27509	3	Percutaneous skeletal fixation of supracondylar or transcondylar femoral fracture, with or without intercondylar extension
27511	4	Open treatment of femoral supracondylar fracture without intercondylar extension, with or without internal or external fixation
27513	5	Open treatment of femoral supracondylar or transcondylar fracture with intercondylar extension, with or without internal or external fixation
27535	3	Open treatment of tibial fracture, proximal (plateau); unicondylar, with or without internal or external fixation
27759	4	Open treatment of tibial shaft fracture (with or without fibular fracture) by intermedullary implant, with or without interlocking screws and/or cerclage
27824	1	Closed treatment of fracture of weight bearing articular portion of distal tibia (eg, pilon or tibial plafond), with or without anesthesia; without manipulation
27825	2	Closed treatment of fracture of weight bearing articular portion of distal tibia (eg, pilon or tibial plafond), with or without anesthesia; with skeletal traction and/or requiring manipulation
27826	3	Open treatment of fracture of weight bearing articular surface/portion of distal tibia (eg, pilon or tibial plafond), with internal or external fixation; of fibula only
27827	3	Open treatment of fracture of weight bearing articular surface/portion of distal tibia (eg, pilon or tibial plafond), with internal or external fixation; of tibia only

CPT Code	Payment Group	Body system and description
27828	4	Open treatment of fracture of weight bearing articular surface/portion of distal tibia (eg, pilon or tibial plafond), with internal or external fixation; of both tibia and fibula
27829	2	Open treatment of distal tibiofibular joint (syndesmosis) disruption, with or without internal or external fixation
28576	3	Percutaneous skeletal fixation of talotarsal joint dislocation, with manipulation
28636	3	Percutaneous skeletal fixation of metatarsophalangeal joint dislocation, with manipulation
28666	3	Percutaneous skeletal fixation of interphalangeal joint dislocation, with manipulation
29850	4	Arthroscopically aided treatment of intercondylar spine(s) and/or tuberosity fracture(s) of the knee, with or without manipulation; without internal or external fixation (includes arthroscopy)
29851	4	Arthroscopically aided treatment of intercondylar spine(s) and/or tuberosity fracture(s) of the knee, with or without manipulation; with internal or external fixation (includes arthroscopy)
29855	4	Arthroscopically aided treatment of tibial fracture, proximal (plateau); unicondylar, with or without internal or external fixation (includes arthroscopy)
29856	4	Arthroscopically aided treatment of tibial fracture, proximal (plateau); bicondylar, with or without internal or external fixation (includes arthroscopy)
		RESPIRATORY SYSTEM
31730	1	Transtracheal (percutaneous) introduction of needle wire dilator/stent or indwelling tube for oxygen therapy
		FEMALE GENITAL SYSTEM
56300	3	Laparoscopy, diagnostic (separate procedure)
56303	5	Laparoscopy, surgical; with fulguration or excision of lesions of the ovary, pelvic viscera, or peritoneal surface by any method
56304	5	Laparoscopy, surgical; with lysis of adhesions
56305	4	Laparoscopy, surgical; with biopsy (single or multiple)
56306	4	Laparoscopy, surgical; with aspiration (single or multiple)
56307	5	Laparoscopy, surgical; with removal of adnexal structures (partial or total oophorectomy and/or salpingectomy)
56350	1	Hysteroscopy, diagnostic (separate procedure)
56352	2	Hysteroscopy, surgical; with lysis of intrauterine adhesions (any method)
56354	3	Hysteroscopy, surgical; with removal of leiomyomata
56405	2	Incision and drainage of vulva or perineal abscess
56605	1	Biopsy of vulva or perineum (separate procedure); one lesion
56810	5	Perineoplasty, repair of perineum, non-obstetrical (separate procedure)

5. Deletions From the List of Covered Procedures for Ambulatory Surgical Centers, Deleted from the 1994 CPT

The CPT is updated annually, and some additions and deletions affect the ASC list. The following part 5 of this addendum is the list of procedures that were deleted from the ASC list because they were deleted from the 1994 CPT. These deletions were effective April 11, 1994. This list of deletions differs from the Medicare Carriers Manual instruction that was effective April 11, 1994, in that we have since decided to retain four of the nasal and sinus endoscopy codes: CPT codes 31254 through 31256 and 31267. We are retaining these codes since we anticipate that they will be reinstated by the CPT Editorial Panel effective January 1995.

In the first column is the CPT code for the procedure; and in the second column, the body system and description of the procedure.

We are requesting public comments on the appropriateness of the deletion of the CPT codes in Addendum C, part 5, because we had not suggested them for deletion in our December 1993 proposed notice.

CPT Code	Body system and description
	RESPIRATORY SYSTEM
31252	Nasal endoscopy, surgical; with nasal polypectomy
31258	Nasal endoscopy, surgical; with removal of foreign body(s)
31260	Maxillary sinus endoscopy, diagnostic, with or without biopsy (separate procedure)
31263	Maxillary sinus endoscopy, surgical; with removal of foreign body(s)
31265	Maxillary sinus endoscopy, surgical; with removal of cyst
31268	Maxillary sinus endoscopy, surgical; with removal of fungus ball
31270	Sphenoid endoscopy, diagnostic, with or without biopsy (separate procedure)
31275	Sphenoid endoscopy, surgical
31277	Sphenoid endoscopy, surgical; with removal of mucous membrane
	CARDIOVASCULAR SYSTEM
36820	Insertion of cannula for hemodialysis, other purpose; arteriovenous, internal (Climino type)
	DIGESTIVE SYSTEM
43451	Dilation of esophagus, by unguided sound or bougie, single or multiple passes; subsequent session
43455	Dilation of esophagus, by balloon or dilator; under fluoroscopic guidance
45310	Proctosigmoidoscopy; with removal of polyp or papilloma
45336	Sigmoidoscopy, flexible fiberoptic; with ablation of tumor or mucosal lesion (eg, electrocoagulation, laser photocoagulation, hot biopsy/fluguration)
46000	Fistulotomy, subcutaneous
49300	Peritoneoscopy; without biopsy
49301	Peritoneoscopy; with biopsy
49302	Peritoneoscopy with guided transhepatic cholangiography; without biopsy
49303	Peritoneoscopy with guided transhepatic cholangiography; with biopsy
49401	Pneumoperitoneum (separate procedure); subsequent
49510	Repair inguinal hernia, age 5 or over; with orchiectomy, with or without implantation of prosthesis
49515	Repair inguinal hernia, age 5 or over; with orchiectomy, with excision of hydrocele or spermatocele
49552	Repair femoral hernia, Henry approach
49575	Repair epigastric hernia, properitoneal fat (separate procedure); complex
49581	Repair umbilical hernia; age 5 or over

6. Additions to the List of Covered Procedures for Ambulatory Surgical Centers, Added to the 1994 CPT (Added to the Medicare Carriers Manual January 1, 1994)

The CPT is updated annually, and some additions and deletions affect the ASC list. The following part 6 of this addendum is the list of procedures that were added to the ASC list because of additions to the 1994 CPT. These procedures were added to the ASC list by the Medicare Carriers Manual and were effective January 1, 1994. In the

first column is the CPT code for the procedure; in the second column, the payment group for the procedure; and in the third column, the body system and description of the procedure.

We are requesting public comments on the appropriateness of the addition of, and assignment of payment groups for, the CPT codes in Addendum C, part 6, because we had not suggested them for addition in our December 1993 proposed notice.

CPT code	Payment group	Body system and description
		INTEGUMENTARY SYSTEM
19125	3	Excision of breast lesion identified by pre-operative placement of radiological marker; single lesion
19126	3	Excision of breast lesion identified by pre-operative placement of radiological marker; each additional lesion separately identified by a radiological marker
		MUSCULOSKELETAL SYSTEM
24566	2	Percutaneous skeletal fixation of humeral epicondylar fracture, medial or lateral, with manipulation
24582	2	Percutaneous skeletal fixation of humeral condylar fracture, medial or lateral, with manipulation
		RESPIRATORY SYSTEM
31233	2	Nasal/sinus endoscopy, diagnostic with maxillary sinusoscopy (via inferior meatus or canine fossa puncture)
31235	1	Nasal/sinus endoscopy, diagnostic with sphenoid sinusoscopy (via puncture of sphenoidal face or cannulation of osteum)
31237	2	Nasal/sinus endoscopy, surgical; with biopsy, polypectomy or debridement (separate procedure)
31238	1	Nasal/sinus endoscopy, surgical; with control of epistaxis
31239	4	Nasal/sinus endoscopy, surgical; with dacryocystorhinostomy
31240	2	Nasal/sinus endoscopy, surgical; with concha bullosa resection
31245	3	Nasal/sinus endoscopy, surgical, with osteomeatal complex (OMC) resection and/or anterior ethmoidectomy, with or without removal of polyp(s)
31246	3	Nasal/sinus endoscopy, surgical, with osteomeatal complex (OMC) resection and/or anterior ethmoidectomy, with or without removal of polyp(s); with antrostomy
31247	3	Nasal/sinus endoscopy, surgical, with osteomeatal complex (OMC) resection and/or anterior ethmoidectomy, with or without removal of polyp(s); with antrostomy and removal of antral mucosal disease
31248	3	Nasal/sinus endoscopy, surgical, with osteomeatal complex (OMC) resection and/or anterior ethmoidectomy, with or without removal of polyp(s); with frontal sinus exploration
31249	3	Nasal/sinus endoscopy, surgical, with osteomeatal complex (OMC) resection and/or anterior ethmoidectomy, with or without removal of polyp(s); with frontal sinus exploration and antrostomy
31251	3	Nasal/sinus endoscopy, surgical, with osteomeatal complex (OMC) resection and/or anterior ethmoidectomy, with or without removal of polyp(s); with frontal sinus exploration, antrostomy, and removal of antral mucosal disease
31261	5	Nasal/sinus endoscopy, surgical, with anterior and posterior ethmoidectomy (APE), with or without removal of polyp(s)
31262	5	Nasal/sinus endoscopy, surgical, with anterior and posterior ethmoidectomy (APE), with or without removal of polyp(s); with antrostomy
31264	5	Nasal/sinus endoscopy, surgical, with anterior and posterior ethmoidectomy (APE), with or without removal of polyp(s); with antrostomy and removal of antral mucosal disease
31266	5	Nasal/sinus endoscopy, surgical, with anterior and posterior ethmoidectomy (APE), with or without removal of polyp(s); with frontal sinus exploration
31269	5	Nasal/sinus endoscopy, surgical, with anterior and posterior ethmoidectomy (APE), with or without removal of polyp(s); with frontal sinus exploration and antrostomy
31271	5	Nasal/sinus endoscopy, surgical, with anterior and posterior ethmoidectomy (APE), with or without removal of polyp(s); with frontal sinus exploration, antrostomy, and removal of antral mucosal disease
31280	5	Nasal/sinus endoscopy, surgical, with anterior and posterior ethmoidectomy and sphenoidotomy (APS), with or without removal of polyp(s)
31281	5	Nasal/sinus endoscopy, surgical, with anterior and posterior ethmoidectomy and sphenoidotomy (APS), with or without removal of polyp(s); with antrostomy
31282	5	Nasal/sinus endoscopy, surgical, with anterior and posterior ethmoidectomy and sphenoidotomy (APS), with or without removal of polyp(s); with antrostomy and removal of antral mucosal disease
31283	5	Nasal/sinus endoscopy, surgical, with anterior and posterior ethmoidectomy and sphenoidotomy (APS), with or without removal of polyp(s); with frontal sinus exploration
31284	5	Nasal/sinus endoscopy, surgical, with anterior and posterior ethmoidectomy and sphenoidotomy (APS), with or without removal of polyp(s); with frontal sinus exploration and antrostomy
31286	5	Nasal/sinus endoscopy, surgical, with anterior and posterior ethmoidectomy and sphenoidotomy (APS), with or without removal of polyp(s); with frontal sinus exploration, antrostomy and removal of antral mucosal disease
31287	3	Nasal/sinus endoscopy, surgical, with sphenoidotomy
31288	3	Nasal/sinus endoscopy, surgical, with sphenoidotomy; with removal of tissue from the sphenoid sinus

CPT code	Payment group	Body system and description
		DIGESTIVE SYSTEM
43216	1	Esophagoscopy, rigid or flexible; with removal of tumor(s), polyp(s), or other lesion(s) by hot biopsy forceps or bipolar cautery
43248	2	Upper gastrointestinal endoscopy including esophagus, stomach, and either the duodenum and/or jejunum as appropriate; with insertion of guide wire followed by dilation of esophagus over guide wire
43250	2	Upper gastrointestinal endoscopy including esophagus, stomach, and either the duodenum and/or jejunum as appropriate; with removal of tumor(s), polyp(s), or other lesion(s) by hot biopsy forceps or bipolar cautery
43261	2	Endoscopic retrograde cholangiopancreatography (ERCP); with biopsy, single or multiple
43458	2	Dilation of esophagus with balloon (30 mm diameter or larger) for achalasia
44365	2	Small intestinal endoscopy, enteroscopy beyond second portion of duodenum, not including ileum; with removal of tumor(s), polyp(s), or other lesion(s) by hot biopsy forceps or bipolar cautery
44394	1	Colonoscopy through stoma; with removal of tumor(s), polyp(s), or other lesion(s) by snare technique
45308	1	Proctosigmoidosopy, rigid; with removal of single tumor, polyp, or other lesion by hot biopsy forceps or bipolar cautery
45309	1	Proctosigmoidoscopy, rigid; with removal of single tumor, polyp, or other lesion by snare technique
45338	1	Sigmoidoscopy, flexible; with removal of tumor(s), polyp(s), or other lesion(s) by snare technique
45339	1	Sigmoidoscopy, flexible; with ablation of tumor(s), polyp(s), other lesion(s) not amenable to removal by hot biopsy forceps, bipolar cautery or snare technique
45384	2	Colonoscopy, flexible, proximal to splenic flexure; with removal of tumor(s), polyp(s), or other lesion(s) by hot biopsy forceps or bipolar cautery
46611	1	Anoscopy; with removal of single tumor, polyp, or other lesion by snare technique
49585	4	Repair umbilical hernia, age 5 or over; reducible
		LAPAROSCOPY/PERITONEOSCOPY/HYSTEROSCOPY
56360	2	Peritoneoscopy; without biopsy
56361	3	Peritoneoscopy; with biopsy
56362	3	Peritoneoscopy; with guided transhepatic cholangiography; with biopsy
56363	3	Peritoneoscopy with guided transhepatic cholangiography; with biopsy
		EYE AND OCULAR ADNEXA
66172	4	Fistulization of sclera for glaucoma; trabeculectomy ab externo with scarring from previous ocular surgery or trauma (includes injection of antifibrotic agents)

[FR Doc. 95–1897 Filed 1–25–95; 8:45 am]

BILLING CODE 4120–01–P

National Institutes of Health

Division of Research Grants; Notice of Closed Meetings

Pursuant to Section 10(d) of the Federal Advisory Committee Act, as amended (5 U.S.C. Appendix 2), notice is hereby given of the following Division of Research Grants Special Emphasis Panel (SEP) meetings:

Purpose/Agenda: To review individual grant applications

Name of SEP: Clinical Sciences.
Date: February 22, 1995.
Time: 8:30 a.m.
Place: River Inn, Washington, DC.
Contact Person: Dr. Mushtaq Khan, Scientific Review Administrator, 5333 Westbard Ave., Room 354B, Bethesda, MD 20892, (301) 594–7168.

Name of SEP: Biological and Physiological Sciences.
Date: February 28–March 1, 1995.
Time: 8:30 a.m..
Place: St. James Hotel, Washington, DC.
Contact Person: Dr. Nancy Pearson, Scientific Review Administrator, 5333 Westbard Ave., Room 425, Bethesda, MD 20892, (301) 594–9505.

Name of SEP: Biological and Physiological Sciences.
Date: March 1, 1995.
Time: 8:30 a.m.
Place: Holiday Inn, Bethesda, MD.
Contact Person: Dr. Camilla Day, Scientific Review Administrator, 5333 Westbard Ave., Room 421C, Bethesda, MD 20892, (301) 594–7389.

Name of SEP: Biological and Physiological Sciences.
Date: March 2–3, 1995.
Time: 8:30 a.m.
Place: St. James Hotel, Washington, DC.
Contact Person: Dr. Nancy Pearson, Scientific Review Administrator, 5333 Westbard Ave., Room 425, Bethesda, MD 20892, (301) 594–9505.

Name of SEP: Behavioral and Neurosciences.
Date: March 7, 1995.
Time: 8:30 a.m.
Place: Holiday Inn, Chevy Chase, MD.
Contact Person: Dr. Lilian Pubols, Scientific Review Administrator, 5333 Westbard Ave., Room 306A, Bethesda, MD 20892, (301) 594–7325.

Name of SEP: Clinical Sciences.
Date: March 14–15, 1995.
Time: 8:30 a.m.
Place: Crowne Plaza, Rockville, MD.
Contact Person: Dr. Sooja Kim, Scientific Review Administrator, 5333 Westbard Ave., Room 348, Bethesda, MD 20892, (301) 594–7174.

Name of SEP: Clinical Sciences.
Date: March 14–15, 1995.
Time: 8:30 a.m.
Place: Crown Plaza, Rockville, MD.
Contact Person: Dr. Sooja Kim, Scientific Review Administrator, 5333 Westbard Ave., Room 348, Bethesda, MD 20892, (301) 594–7174.

The meetings will be closed in accordance with the provisions set forth in sec. 552b(c)(4) and 552b(c)(6), Title 5, U.S.C. Applications and/or proposals and the discussions could reveal confidential trade secrets or commercial property such as patentable material and personal information concerning individuals associated with the applications and/or proposals, the disclosure of which would constitute a clearly unwarranted invasion of personal privacy.

(Catalog of Federal Domestic Assistance Program Nos. 93.306, 93.333, 93.337, 93.393–93.396, 93.837–93.844, 93.846–93.878, 93.892, 93.893, National Institutes of Health, HHS)

Dated: January 18, 1995.

Susan K. Feldman,

Committee Management Officer, NIH.

[FR Doc. 95–1896 Filed 1–25–95; 8:45 am]

BILLING CODE 4140–01–M

Division of Research Grants; Notice of Closed Meetings

Pursuant to Section 10(d) of the Federal Advisory Committee Act, as amended (5 U.S.C. Appendix 2), notice is hereby given of the following Division of Research Grants Special Emphasis Panel (SEP) meetings:

Purpose/Agenda: To review individual grant applications.

Name of SEP: Microbiological and Immunological Sciences.
Date: February 14, 1995.

Time: 8:00 a.m.
Place: Holiday Inn, Bethesda, MD.
Contact Person: Dr. Marcel Pons, Scientific Review Administrator, 5333 Westbard Ave., Room 403A, Bethesda, MD 20892, (301) 594–7210.

Name of SEP: Behavioral and Neurosciences.
Date: February 15, 1995.
Time: 1:00 p.m.
Place: Georgetown Inn, Washington, DC.
Contact Person: Dr. Carole Jelsema, Scientific Review Administrator, 5333 Westbard Ave., Room 319B, Bethesda, MD 20892, (301) 594–7311.

Name of SEP: Behavioral and Neurosciences.
Date: March 3, 1995.
Time: 8:30 a.m.
Place: Pooks Hill Marriott, Bethesda, MD.
Contact Person: Dr. Bob Weller, Scientific Review Administrator, 5333 Westbard Ave., Room 307, Bethesda, MD 20892, (301) 594–7340.

Purpose/Agenda: To review Small Business Innovation Research Program grant applications.

Name of SEP: Clinical Sciences.
Date: March 27–28, 1995.
Time: 8:30 a.m.
Place: Crowne Plaza, Rockville, MD.
Contact Person: Dr. Gertrude McFarland, Scientific Review Administrator, 5333 Westbard Ave., Room 52, Bethesda, MD 20892, (301) 594–7080.

The meetings will be closed in accordance with the provisions set forth in sec. 552b(c)(4) and 552b(c)(6), Title 5, U.S.C. Applications and/or proposals and the discussions could reveal confidential trade secrets or commercial property such as patentable material and personal information concerning individuals associated with the applications and/or proposals, the disclosure of which would constitute a clearly unwarranted invasion of personal privacy.

(Catalog of Federal Domestic Assistance Program Nos. 93.306, 93.333, 93.337, 93.393–93.396, 93.837–93.844, 93.846–93.878, 93.892, 93.893, National Institutes of Health, HHS)

Dated: January 18, 1995.

Susan K. Feldman,

Committee Management Officer, NIH.

[FR Doc. 95–1895 Filed 1–25–95; 8:45 am]

BILLING CODE 4140–01–M

DEPARTMENT OF THE INTERIOR

Bureau of Land Management

[CA–068–95–1990–02]

Termination of Emergency Closure of Public Lands; California

AGENCY: Bureau of Land Management, Department of the Interior.

ACTION: Termination of the April 18, 1994 emergency closure of certain public lands to placer dry wash and sluice mining without prior approval of the Bureau of Land Management [59 FR 78; pp. 19202–19203].

SUMMARY: The April 18, 1994 emergency closure, issued under Title 43, Code of Federal Regulations, § 8364.1, was necessary to stop a rapid increase in unauthorized placer mining within a 29,100 acre area of public lands located approximately 15 miles north of Barstow, California. This unauthorized mining was severely impacting designated critical habitat of the desert tortoise, a federally listed threatened species under the Endangered Species Act of 1973 (as amended), and was causing undue impairment to scenic, scientific and environmental values in this portion of the California Desert Conservation Area.

Since issuance of this closure, the BLM has achieved compliance with the applicable laws pertaining to mining in this area. This closure, therefore, is determined to be unnecessary. However, the BLM will vigorously pursue administrative, civil and/or criminal actions against any renewal of these unauthorized placer drywash and sluice mining activities.

DATES: This termination action becomes effective January 20, 1995.

FOR FURTHER INFORMATION CONTACT: John Kalish of the Barstow Resource Area (Tel. 619–255–8716).

Dated: January 20, 1995.

Tim Read,

Acting Area Manager.

[FR Doc. 95–1945 Filed 1–25–95; 8:45 am]

BILLING CODE 4310–40–P

[CO–050–1150–04]

Seasonal Closure

AGENCY: Bureau of Land Management, Interior.

ACTION: Notice of Seasonal Closure of Cathedral Spires and Dome Rock in Jefferson County, Colorado to all public use from March 1 through July 31.

SUMMARY: Notice is hereby given that effective March 1, 1995, public lands described below are closed to all public use, under the authority and requirement of 43 CFR 8364.1, and in conformance with the principles established by the National Environmental Policy Act of 1969 and the Federal Land Policy and Management Act of 1976. This closure affects 320 acres of public lands in Jefferson County located in T. 7 S., R. 70 W., 6th PM, Sec. 19: SW¼ SE¼, SE¼ SW¼, Sec. 20: W½ E½, SE¼ NW¼, and the NE¼ SW¼. The purpose of this closure is to protect critical nesting habitat for the federally listed endangered peregrine falcon. These restrictions do not apply to emergency, law enforcement and Federal, State or other governmental personnel who are in the area for official or emergency purposes and who are expressly authorized or otherwise officially approved by BLM. Any person who fails to comply with this closure order will be subject to the penalties provided by 43 CFR 8360.0–7 which includes fines not to exceed $1000 and/or imprisonment not to exceed 12 months. Notice of this closure will be posted at the site and at the Canon City District Office.

DATES: This closure is in effect from March 1 to July 31 and shall remain in effect unless revised, revoked or amended.

ADDRESSES: Comments can be directed to the Area Manager, Royal Gorge Resource Area, 3170 East Main, Canon City, CO 81212 or District Manager, Canon City District Office, 3170 East Main, Canon City, CO 81212.

FOR FURTHER INFORMATION CONTACT: Area Manager at (719) 275–0631.

Donnie R. Sparks,

District Manager.

[FR Doc. 95–1985 Filed 1–25–95; 8:45 am]

BILLING CODE 4310–JB–M

[CA–930–5410–00–B032; CACA 30663]

Conveyance of Mineral Interests in California

AGENCY: Bureau of Land Management, Interior.

ACTION: Notice of Segregation.

SUMMARY: The private land described in this notice, aggregating 120.00 acres, is segregated and made unavailable for filings under the general mining laws and the mineral leasing laws to determine its suitability for conveyance of the reserved mineral interest pursuant to section 209 of the Federal Land Policy and Management Act of October 21, 1976.

The mineral interests will be conveyed in whole or in part upon favorable mineral examination.

The purpose is to allow consolidation of surface and subsurface of minerals ownership where there are no known mineral values or in those instances where the reservation interferes with or precludes appropriate nonmineral development and such development is a more beneficial use of the land than the mineral development.

FOR FURTHER INFORMATION CONTACT: Marcia Sieckman, California State Office, Federal Office Building, 2800

Cottage Way, Room E–2845, Sacramento, California 95825, (916) 979–2858. Serial No. CACA 30663.

T. 38 N., R. 9 E., Mount Diablo Meridian, Sec. 30, N½NE¼, SW¼NE¼.

County—Lassen

Minerals Reservation—All coal and other minerals.

Upon publication of this Notice of Segregation in the **Federal Register** as provided in 43 CFR 2720.1–1(b), the mineral interests owned by the United States in the private lands covered by the application shall be segregated to the extent that they will not be subject to appropriation under the mining and mineral leasing laws. The segregative effect of the application shall terminate by publication of an opening order in the **Federal Register** specifying the date and time of opening; upon issuance of a patent or other document of conveyance to such mineral interest; or two years from the date of publication of this notice, whichever occurs first.

Dated: January 18, 1995.

Nancy J. Alex,

Chief, Lands Section.

[FR Doc. 95–1994 Filed 1–25–95; 8:45 am]

BILLING CODE 4310–40–P

[ID–942–04–1420–00]

Idaho: Filing of Plats of Survey; Idaho

The plat of the following described land was officially filed in the Idaho State Office, Bureau of Land Management, Boise, Idaho, effective 9:30 a.m., January 17, 1995.

The plat representing the dependent resurvey of portions of the south boundary and subdivisional lines, T. 15 S., R. 43 E., Boise Meridian, Idaho, Group No. 889, was accepted, January 12, 1995.

This survey was executed to meet certain administrative needs of the Bureau of Land Management.

All inquiries concerning the survey of the above described land must be sent to the Chief, Branch of Cadastral Survey, Idaho State Office, Bureau of Land Management, 3380 Americana Terrace, Boise, Idaho, 83706.

Dated: January 17, 1995.

Gary T. Oviatt,

Acting Chief, Cadastral Surveyor for Idaho.

[FR Doc. 95–1986 Filed 1–25–95; 8:45 am]

BILLING CODE 4310–GG–M

[MT–060–05–1430–01]

Notice of Public Meetings on a Withdrawal Proposal for the Sweet Grass Hills; Liberty and Toole Counties, Montana

AGENCY: Bureau of Land Management, Department of the Interior.

ACTION: Notice of public meetings.

SUMMARY: The Bureau of Land Management (BLM) proposes to withdraw for a term of 20 years up to 19,764.74 acres of public mineral estate for protection of the unique resources within the Sweet Grass Hills Area of Critical Environmental Concern. The purpose of the proposed withdrawal is to protect areas of traditional spiritual importance to Native Americans and aquifers that provide potable water in the area. Notice is hereby given that four public meetings will be held in connection with the proposed withdrawal. The public meetings fulfill the requirements under 43 CFR part 2310.3–1(c)(2).

Public participation: Public meetings on the proposed withdrawal will be held at:

Shelby, MT, Shelby High School Auditorium, February 27, 1995, 7 p.m.;

Browning, MT, Browning High School Annex, February 28, 1995, 7 p.m.;

Chester, Montana, Chester High School Auditorium, March 1, 1995, 7 p.m.; and

Rocky Boy, MT, Community Hall, March 2, 1995, 10 a.m.

ADDRESSES: Comments on the withdrawal proposal should be addressed to Richard Hopkins, Area Manager, Great Falls Resource Area, 812 14th St. N., Great Falls, MT 59401.

FOR FURTHER INFORMATION CONTACT:

Tad Day, Team Lead, Great Falls Resource Area, 812 14th St. N., Great Falls, MT 59401, 406–727–0503.

SUPPLEMENTARY INFORMATION: In August 1993, the BLM segregated the Federal mineral estate in the Sweet Grass Hills for a 2-year period which closed the area to the location of new mining claims until August 1995 (**Federal Register**, Volume 58, No 147, page 41289, August 3, 1993).

Dated: January 17, 1995.

B. Gene Miller.

[FR Doc. 95–1899 Filed 1–25–95; 8:45 am]

BILLING CODE 4310–DN–M

[OR–943–4210–06; GP5–060; OR–50874, OR–51194]

Proposed Withdrawal and Opportunity for Public Meeting; Oregon

AGENCY: Bureau of Land Management, Interior.

ACTION: Notice.

SUMMARY: The Bureau of Land Management proposes to withdraw 182.38 acres of public land for protection of the Floras Lake and Lost Lake addition to the New River Area of Critical Environmental Concern near Bandon, Oregon. This notice closes the lands for up to two years from surface entry and mining. The lands will be opened to mineral leasing subject to any temporary segregation of record.

DATES: Comments and requests for a public meeting must be received by April 26, 1995.

ADDRESSES: Comments and meeting requests should be sent to the Oregon/Washington State Director, BLM, P.O. Box 2965, Portland, Oregon 97208–2965.

FOR FURTHER INFORMATION CONTACT: Linda Sullivan, BLM Oregon/Washington State Office, 503–952–6171.

SUPPLEMENTARY INFORMATION: On December 23, 1994, a petition was approved allowing the Bureau of Land Management to file an application to withdraw the following described lands from settlement, sale, location, and entry under the general land laws, including the United States mining laws (30 U.S.C. Ch. 2 (1988)), but not the mineral leasing laws, subject to valid existing rights:

Willamette Meridian

Floras Lake

T. 31 S., R. 15 W.,
Sec. 7, lot 1;
Sec. 8, lots 3, 4, 5, and 6.

To include any accretion of land, the area described contains approximately 111.48 acres in Curry County.

Lost Lake

T. 29 S., R. 15 W.,
Sec. 35 N½NE¼NE¼;
Sec. 36, NW¼NW¼ and that portion of the NE¼NW¼ beginning at the southwest corner of the NW¼NE¼NW¼ of Sec. 36, T. 29 S., R. 15 W., and running thence north along the west line of the NE¼NW¼ of said Sec. 36 a distance of 300 feet; thence east parallel to the north line of said Sec. 36 a distance of 250 feet; thence south parallel to the west line of the NE¼NW¼ of said Sec. 36 a distance of 300 feet; thence west along the south boundary of the NW¼NE¼NW¼ of said Sec. 36 a distance of 250 feet to the point of beginning; AND Beginning at the

southwest corner of the NE¼NW¼ of Sec. 36, T. 29 S., R. 15 W., proceeding thence east 634 feet; thence north 420 feet to Berg Road; thence westerly along said road 52 feet, more or less, to the southwest corner of property conveyed in Book 193, Page 489, Deed Records of Coos County, Oregon; thence north 242 feet, more or less, to the northwest corner of property conveyed in Book 193, Page 489, Deed Records of Coos County, Oregon; thence west 523 feet to the west line of the NE¼NW¼ of said section; thence south 662 feet to the southwest corner of the said NE¼NW¼ and the point of beginning, SAVING AND EXCEPTING that part subject to the right of way of the said Berg Road.

The area described contains 70.90 acres in Coos County.

The purpose of the proposed withdrawal is to protect recreational values, cultural sites, wetlands, and endangered species habitat.

For a period of 90 days from the date of publication of this notice, all persons who wish to submit comments, suggestions, or objections in connection with the proposed withdrawal may present their views in writing to the State Director at the address indicated above.

Notice is hereby given that an opportunity for a public meeting is afforded in connection with the proposed withdrawal. All interested parties who desire a public meeting for the purpose of being heard on the proposed withdrawal must submit a written request to the State Director at the address indicated above within 90 days from the date of publication of this notice. Upon determination by the authorized officer that a public meeting will be held, a notice of the time and place will be published in the **Federal Register** at least 30 days before the scheduled date of the meeting.

The application will be processed in accordance with the regulations set forth in 43 CFR 2300.

For a period of two years from the date of publication of this notice in the **Federal Register**, the lands will be segregated as specified above unless the application is denied or canceled or the withdrawal is approved prior to that date. Temporary land uses that may be permitted by the authorized officer during the period of temporary segregation include leases, licenses, permits, rights-of-way, and disposal of mineral or vegetative resources other than under the mining laws.

Dated: January 19, 1995.

Robert D. DeViney, Jr.,

Acting Chief, Branch of Realty and Records Services.

[FR Doc. 95–1999 Filed 1–25–95; 8:45 am]

BILLING CODE 4310–33–M

[WY–930–1430–01; WYW 128871]

Notice of Amendment to a Proposed Withdrawal; Wyoming

AGENCY: Bureau of Land Management, Interior.

ACTION: Notice.

SUMMARY: The Bureau of Land Management (BLM) proposed in a **Federal Register** notice dated June 3, 1993, to withdraw public lands and minerals to protect important recreation, scenic, riparian, and wildlife resource values along the Snake and Gros Ventre Rivers near Jackson, Wyoming. The amendment proposes a 10 year withdrawal term, instead of 20 years, in order to coincide with the expected completion of land use planning. It also proposes the lands remain open, instead of closed, to disposal by sale, exchange, or Recreation and Public Purposes Act conveyance.

EFFECTIVE DATE: January 26, 1995. Comments must be received by February 27, 1995.

ADDRESSES: Comments and requests should be sent to the Wyoming State Director, BLM, PO Box 1828, Cheyenne, Wyoming 82003.

FOR FURTHER INFORMATION CONTACT: Arlan Hiner, Pinedale Resource Area Manager, Box 768, Pinedale, Wyoming 82941, (307) 367–4358.

SUPPLEMENTARY INFORMATION: Analysis of the proposal identified a need for having the term of the withdrawal coincide with when land use planning is expected to be completed, and also retain the option of being able to dispose of land. The original proposal assumed land use planning would be completed within 2 years, and that a 20 year withdrawal term would be appropriate. Because of other commitments, land use planning is now expected to be completed within 10 years, and the term of the withdrawal should coincide with completion of the land use plan, which will decide the need and extent for future withdrawals. The proposed withdrawal would close public lands and minerals to settlement, location, or entry under the general land laws, including the mining laws, subject to valid existing rights. The amendment would change the proposal such that certain types of land disposals are allowed.

For a period of 30 days from the date of publication of this notice, all persons who wish to submit comments, suggestions, or objections in connection with the proposed withdrawal amendment may present their views in writing to the Wyoming State Director of the Bureau of Land Management.

Dated: January 18, 1995.

Robert A. Bennett,

Acting State Director.

[FR Doc. 95–1992 Filed 1–25–95; 8:45 am]

BILLING CODE 4310–22–P

Fish and Wildlife Service

Notice of Receipt of Applications for Permit

The Following applicants have applied for a permit to conduct certain activities with endangered species. This notice is provided pursuant to Section 10(c) of the Endangered Species Act of 1973, as amended (16 U.S.C. 1531, *et seq.*):

Applicant: Gregory Lille, Auburn, CA, PRT–798039

The applicant requests a permit to import one female captive-bred chimpanzee (*Pan troglodytes*) for the purpose of enhancement of the species through breeding and conservation education.

Applicant: Dr. Patricia Wainright, Cook Campus, Rutgers University, New Brunswick, NJ, PRT–798252

The applicant requests a permit to import dropped feathers and tissue samples from captive-held and road-killed Cayman Brac parrot (*Amazona leucocephala hesterna*) and Cayman Island parrot (*Amazona leucocephala caymanensis*) being held by the National Trust for the Cayman Islands for scientific research.

Written data or comments should be submitted to the Director, U.S. Fish and Wildlife Service, Office of Management Authority, 4401 North Fairfax Drive, Room 420(c), Arlington, Virginia 22203 and must be received by the Director within 30 days of the date of this publication.

Documents and other information submitted with these applications are available for review, subject to the requirements of the Privacy Act and Freedom of Information Act, by any party who submits a written request for a copy of such documents to the following office within 30 days of the date of publication of this notice: U.S. Fish and Wildlife Service, Office of Management Authority, 4401 North Fairfax Drive, Room 420(c), Arlington, Virginia 22203. Phone: (703/358–2104); FAX: (703/358–2281).

Dated: January 20, 1995.

Caroline Anderson,

Acting Chief, Branch of Permits, Office of Management Authority.

[FR Doc. 95–1910 Filed 1–25–95; 8:45 am]

BILLING CODE 4310–55–P

Receipt of Application(s) for Permit

The following applicant has applied for a permit to conduct certain activities with endangered species. This notice is provided pursuant to Section 10(c) of the Endangered Species Act of 1973, as amended (16 U.S.C. 1531, *et seq.*)

PRT–796164

Applicant: Dr. Keith A. Arnold, Keith A. Arnold Company, Bryan, Texas

The applicant requests a permit to include take activities for the Back-capped vireo (Vireo atricapillus) and Golden-cheeked warbler (Dendroica chrysoparia) for the purpose of scientific research and enhancement of propagation and survival of the species as prescribed by Service recovery documents.

ADDRESSES: Written data or comments should be submitted to the Assistant Regional Director, Ecological Services, U.S. Fish and Wildlife Service, P.O. Box 1306, Albuquerque, New Mexico 87103, and must be received by the Assistant Regional Director within 30 days for the date of this publication.

Documents and other information submitted with this application are available for review, subject to the requirements of the Privacy Act and Freedom of Information Act, by any party who submits a written request for a copy of such documents to the above office within 30 days of the date of publication of this notice. (See **ADDRESSES** above.)

Susan MacMullin,

Acting Regional Director, Region 2, Albuquerque, New Mexico.

[FR Doc. 95–1946 Filed 1–25–95; 8:45 am]

BILLING CODE 4310–55–M

Receipt of Application(s) for Permit

The following applicants have applied for a permit to conduct certain activities with endangered species. This notice is provided pursuant to Section 10(c) of the Endangered Species Act of 1973, as amended (16 U.S.C. 1531, *et seq.*).

PRT–797464

Applicant: Kenneth Ward Kreitner, Bastrop, Texas

The applicant requests a permit to include take activities for Houston toad (*Bufo houstonensis*) for the purpose of scientific research and enhancement of propagation and survival of the species as prescribed by Service recovery documents.

PRT–798170

Applicant: Patricia S. Roller

The applicant requests a permit to include taken activities for the Pima pineapple cactus (*Coryphantha scheeri var. robustispina*) for the purpose of scientific research and enhancement of propagation and survival of the species as prescribed by Service recovery documents.

ADDRESS: Written data or comments should be submitted to the Assistant Regional Director, Ecological Services, U.S. Fish and Wildlife Service, P.O. Box 1306, Albuquerque, New Mexico 87103, and must be received by the Assistant Regional Director within 30 days of the date of this publication.

Documents and other information submitted with this application are available for review, subject to the requirements of the Privacy Act and Freedom of Information Act, by any party who submits a written request for a copy of such documents to the above office within 30 days of the date of publication of this notice. (See **ADDRESS** above.)

Susan MacMullin,

Acting Regional Director, Region 2, Albuquerque, New Mexico.

[FR Doc. 95–1947 Filed 1–25–95; 8:45 am]

BILLING CODE 4310–55–M

U.S. Geological Survey

Studies of Chemical Mobility of Gold and Ore-Related Elements; Nevada

ACTION: Notice.

SUMMARY: Notice is hereby given that the U.S. Geological Survey has accepted from Pinson Mining Company a contribution of $5,000 to support hydrogeochemical studies of the chemical mobility of gold and ore-related elements to ground-water systems associated with buried gold deposits in northern Nevada.

DATES: This notice is effective January 26, 1995.

ADDRESSES: Information on the work is available to the public upon request at the following location: U.S. Geological Survey, Branch of Geochemistry, Box 25046, Denver Federal Center, MS–973, Lakewood, Colorado 80225–0046.

FOR FURTHER INFORMATION CONTACT: Dr. David Grimes of the U.S. Geological Survey, Branch of Geochemistry, at the address given above; telephone 303/236–5510.

John R. Filson,

Acting Chief Geologist.

[FR Doc. 95–1898 Filed 1–25–95; 8:45 am]

BILLING CODE 4310–31–M

INTERSTATE COMMERCE COMMISSION

[Docket No. AB–434 (Sub. No. 1X)]

Winchester & Western Railroad Company—Abandonment Exemption—in Cumberland County, NJ

Winchester & Western Railroad Company (WWNJ), a class III railroad, has filed a notice of exemption under 49 CFR 1152 Subpart F—*Exempt Abandonments* to abandon approximately 7000 feet of rail line, between milepost 47.5 and milepost 49.5, in Cumberland County, NJ.

WWNJ has certified that: (1) no local traffic has moved over the line for at least 2 years; (2) there is no overhead traffic that will need to be rerouted; (3) no formal complaint filed by a user of rail service on the line (or by a State or local government entity acting on behalf of such user) regarding cessation of service over the line either is pending with the Commission or with any U.S. District Court or has been decided in favor of the complainant within the 2-year period; and (4) the requirements at 49 CFR 1105.7 (environmental report), 49 CFR 1105.08 (historic report), 49 CFR 1105.12 (newspaper publication), and 49 CFR 1152.50(d)(1) (notice to governmental agencies) have been met.

As a condition to this exemption, any employee adversely affected by the abandonment shall be protected under *Oregon Short Line R. Co.—Abandonment—Goshen*, 360 I.C.C. 91 (1979). To address whether this condition adequately protects affected employees, a petition for partial revocation under 49 U.S.C. 10505(d) must be filed.

Provided no formal expression of intent to file an offer of financial assistance (OFA) is filed, this exemption will be effective on February 25, 1995, unless stayed pending reconsideration. Petitions to stay that do not involve environmental issues,[1] formal expressions of intent to file an OFA under 49 CFR 1152.27(c)(2),[2] and trail use/rail banking requests under 49 CFR 1152.29 must be filed by February 6, 1995.[3] Petitions to reopen and requests

[1] The Commission will grant a stay if an informed decision on environmental issues, (whether raised by a party or by the Commission in its independent investigation), cannot be made prior to the effective date of the notice of exemption. *See Exemption of Out-of-Service Rail Lines*, 5 I.C.C.2d 377 (1989). Any request for a stay should be filed as soon as possible so that the Commission may review and act on the request before the exemption's effective date.

[2] *See Exempt. of Rail Abandonment—Offers of Finan. Assist.*, 4 I.C.C.2d 164 (1987).

[3] The Commission will accept a late-filed trail use request as long as it retains jurisdiction to do so.

for public use conditions under 49 CFR 1152.28 must be filed by February 15, 1995, with: Office of the Secretary, Case Control Branch, Interstate Commerce Commission, Washington, DC 20423.

A copy of any petition filed with the Commission should be sent to applicant's representative: Jo A. DeRoche, Weiner, Brodsky, Sidman & Kider, P.C., 1350 New York Ave., N.W., Suite 800, Washington, DC 20005.

If the notice of exemption contains false or misleading information, the exemption is void *ab initio.*

WWNJ has filed an environmental report which addresses the abandonment's effects, if any, on the environment and historic resources. The Section of Environmental Analysis (SEA) will issue an environmental assessment (EA) by January 31, 1995. Interested persons may obtain a copy of the EA by writing to SEA (Room 3219, Interstate Commerce Commission, Washington, DC 20423) or by calling Elaine Kaiser, Chief of SEA, at (202) 927–6248. Comments on environmental and historic preservation matters must be filed within 15 days after the EA is available to the public.

Environmental, historic preservation, public use, or trail use/rail banking conditions will be imposed, where appropriate, in a subsequent decision.

Decided: January 20, 1995.

By the Commission, David M. Konschnik, Director, Office of Proceedings.

Vernon A. Williams,

Secretary.

[FR Doc. 95–1961 Filed 1–25–95; 8:45 am]

BILLING CODE 7035–01–P

DEPARTMENT OF JUSTICE

Notice of Lodging of Consent Decree

In accordance with Departmental policy, 28 CFR § 50.7, notice is hereby given that on January 11, 1995, a proposed Consent Decree in *United States* v. *Caribbean Petroleum Corporation,* Civil No. 95–1028(PG), was lodged with the United States District Court for the District of Puerto Rico. The proposed Consent Decree settles the United States' claims that the defendant had violated provisions of the Clean Air Act. The defendant operates a crude oil refinery located in Bayamon, Puerto Rico.

Under the terms of the Consent Decree, the defendant will pay a $350,000 civil penalty. The defendant will also be required to comply with the terms of the fuel oil and gas limitations and record-keeping requirements of its PSD Permit and with those provisions of the New Source Performance Standards for Petroleum Refineries and the Regulation for the Control of Atmospheric Pollution alleged in the complaint to have been violated.

The Department of Justice will receive for a period of thirty (30) days from the date of this publication comments relating to the proposed Consent Decree. Comments should be addressed to the Assistant Attorney General of the Environment and Natural Resources Division, U.S. Department of Justice, Washington, D.C. 20530, and should refer to *United States* v. *Caribbean Petroleum Corporation,* D.O.J. Ref. 90–5–2–1–1848.

The proposed Consent Decree may be examined at the Region II Office of the United States Environmental Protection Agency, 26 Federal Plaza, New York, NY 10278 and at the Environmental Enforcement Section Document Center, 1120 G Street, N.W., 4th Floor, Washington, D.C. 20005 (202 624–0892). A copy of the proposed Consent Decree may be obtained in person or by mail from the Environmental Enforcement Section Document Center, 1120 G Street, N.W., 4th Floor, Washington, D.C. 20005. In requesting a copy, please refer to the referenced case and enclose a check in the amount of $6.25 (25 cents per page reproduction cost) made payable to Consent Decree Library.

Bruce S. Gelber,

Acting Chief, Environmental Enforcement Section, Environmental and Natural Resources Division.

[FR Doc. 95–1995 Filed 1–25–95; 8:45 am]

BILLING CODE 4410–01–M

Notice of Lodging of Consent Decree Pursuant to the Clean Air Act

In accordance with Departmental policy, 28 C.F.R. § 50.7, notice is hereby given that a proposed consent decree in *United States* v. *Masonite Corporation,* Civil Action No. C 95 0189 DLJ (N.D. Cal.), was lodged on January 17, 1995 with the United States District Court for the Northern District of California. In the complaint in that action, the United States seeks from defendant Masonite Corporation (''Masonite'') civil penalties and injunctive relief under Section 113(b) of the Clean Air Act (the ''Act''), 42 U.S.C. 7413(b), for Masonite's failure to obtain a prevention of significant deterioration permit before commencing construction activities for a major modification to its Ukiah, California facility and for violations of a permit governing operations of a boiler at the facility.

The proposed consent decree requires Masonite to obtain a PSD permit, to comply with specified emissions limits and operating practices until issuance of the permit, to comply with the terms of its boiler permit, and to pay a civil penalty of $600,000.

The Department of Justice will receive, for a period of thirty (30) days from the date of this publication, comments relating to the proposed consent decree. Comments should be addressed to the Assistant Attorney General for the Environment and Natural Resources Division, U.S. Department of Justice, P.O. Box 7611, Washington, DC 20044; and refer to *United States* v. *Masonite Corporation,* DOJ Ref. # 90–5–2–1–1847.

The proposed consent decree may be examined at the office of the United States Attorney, Northern District of California, 450 Golden Gate Avenue, San Francisco, California 94102; at the Region IX office of the Environmental Protection Agency, 75 Hawthorne Street, San Francisco, California 94105; and at the Consent Decree Library, 1120 G Street, N.W., 4th Floor, Washington, DC 20005, (202) 624–0892. A copy of the proposed consent decree may be obtained in person or by mail from the Consent Decree Library, 1120 G Street, N.W., 4th Floor, Washington, DC 20005. In requesting a copy please refer to the referenced case and enclose a check in the amount of $8.00 (25 cents per page reproduction costs), payable to the Consent Decree Library.

Joel M. Cross,

Acting Chief, Environmental Enforcement Section, Environment and Natural Resources Division.

[FR Doc. 95–1996 Filed 1–25–95; 8:45 am]

BILLING CODE 4410–01–M

Notice of Lodging of Consent Decree Pursuant to the Comprehensive Environmental Response, Compensation, and Liability Act of 1980

Consistent with the policies expressed in Section 122(d)(2)(B) of the Comprehensive Environmental Response, Compensation, and Liability Act of 1980 (''CERCLA''), 42 U.S.C. 9622(d)(2)(B), and 28 C.F.R. § 50.7, notice is hereby given that on January 10, 1995, a proposed Consent Decree in *United States* v. *Alaskan Battery Enterprises, Inc.,* Civil Action No. A92–606 (D. Alaska), was lodged with the United States District Court for the District of Alaska. This Consent Decree resolves the United States' claims in this action against Sears, Roebuck and Co. (''Sears'') regarding its liability under Sections 107(a) and 113(g) of CERCLA, 42 U.S.C. §§ 9607(a) and 9613(g), for

response costs incurred by the United States in connection with the Alaskan Battery Enterprises Superfund Site in Fairbanks, Alaska. The Decree also resolves the counterclaims brought by Sears against the United States.

The Decree requires, *inter alia*, that Sears reimburse the United States' response costs in the amount of $664,759.00 plus prejudgment interest from May 1, 1994 through the date of payment. Sears is obligated, ten days after entry of the Decree, to stipulate to the dismissal with prejudice of its counterclaims against the United States; the United States is obligated, ten days after all payments have been received, to dismiss its claims against Sears with prejudice, however the Decree does contain a reopener that permits the United States to institute additional proceedings to require that Sears perform further response actions or to reimburse the United States for additional costs of response in certain situations. The Decree provides Sears the contribution protection afforded by Section 113(f)(2) of CERCLA, 42 U.S.C. 9613(f)(2).

The Department of Justice will receive comments relating to the proposed Consent Decree for a period of thirty (30) days from the date of this publication. Comments should be addressed to the Assistant Attorney General of the Environment and Natural Resources Division, Department of Justice, Washington, D.C. 20530, and should refer to *United States* v. *Alaskan Battery Enterprises, Inc.*, D.J. No. 90–11–3–726A.

The proposed Consent Decree may be examined at the Office of the United States Attorney for the District of Alaska, Room 253, Federal Building and U.S. Courthouse, 222 West Seventh Avenue, Anchorage, Alaska 99513–7567; the Region 10 Office of the Environmental Protection Agency, 1200 Sixth Avenue, Seattle, Washington 98101; and at the Consent Decree Library, 1120 G Street, N.W., 4th Floor, Washington, D.C. 20005 (Tel: 202–624–0892). A copy of the proposed Consent Decree may be obtained in person or by mail from the Consent Decree Library, 1120 G Street, N.W., 4th Floor, Washington, D.C. 20005. In requesting a copy, please enclose a check in the amount of $5.75 (25 cents per page reproduction cost) payable to Consent Decree Library.

Joel Gross,

Acting Chief, Environmental Enforcement Section, Environment and Natural Resources Division.

[FR Doc. 95–1997 Filed 1–25–95; 8:45 am]

BILLING CODE 4410–01–M

Antitrust Division

U.S. v. Vision Service Plan; Proposed Final Judgment and Competitive Impact Statement

Notice is hereby given pursuant to the Antitrust Procedures and Penalties Act, 15 U.S.C. section 16(b) through (h), that a proposed Final Judgment, a Stipulation, and a Competitive Impact Statement have been filed with the United States District Court for the District of Columbia in United States of America v. Vision Service Plan, Case No. 1:49CV02693.

The Complaint in the case alleges that Vision Service Plan (VSP) entered into so-called ''most favored nation'' agreements with its panel doctors in unreasonable restraint of trade, in violation of section 1 of the Sherman Act, 15 U.S.C. 1, by effectively restricting the willingness of panel doctors to discount fees for vision care services and substantially reducing discounted fees for vision care services.

The proposed Final Judgment eliminates VSP's most favored nation clause and enjoins VSP from engaging in other actions that would limit future discounting by its participating doctors.

Public comment on the proposed Final Judgment is invited within the statutory 60-day comment period. Such comments and responses thereto will be published in the **Federal Register** and filed with the Court. Comments should be directed to Gail Kursh, Chief; Professions & Intellectual Property Section, Department of Justice, Antitrust Division; 600 E Street, NW., Room 9300; Washington, DC 20530 (telephone: (202) 307–5799).

Constance K. Robinson,

Director of Operations, Antitrust Division.

In the United States District Court for the District of Columbia

United States of America, c/o Antitrust Division, Department of Justice, 600 E Street, NW., Washington, DC 20530, Plaintiff, vs. Vision Service Plan, 3333 Quality Drive, Ranch Cordova, CA 95670, Defendant. Case Number 1:94CV02693. Judge: Thomas Penfield Jackson. Deck Type: Antitrust. Date Stamp: 12/15/94.

Complaint

The United States of America, acting under the direction of the Attorney General of the United States, brings this civil action to obtain equitable and other relief against the defendant named herein, and complains and alleges as follows:

I

Jurisdiction and Venue

1. This Complaint is filed by the United States under section 4 of the Sherman Act, 15 U.S.C. 4, as amended, to prevent and restrain a continuing violation by the Defendant of section 1 of the Sherman Act, 15 U.S.C. 1.

2. The Defendant transacts business and is found within the District of Columbia, within the meaning of 15 U.S.C. 22.

II

Defendant

3. Vision Service Plan (''VSP''), is a California not-for-profit corporation with its principal place of business in Rancho Cordova, California. The Defendant offers vision care insurance plans. To obtain services for covered patients, the Defendant enters into agreements with member optometrists and ophthalmologists in private practice (panel doctors), that govern their provision of vision care services to VSP patients.

4. Whenever this Complaint refers to any corporation's act, deed, or transaction, it means that such corporation engaged in the act, deed, or transaction by or through its members, officers, directors, agents, employees, or other representatives while they actively were engaged in the management, direction, control, or transaction of its business or affairs.

III

Concerted Action

5. Various firms and individuals, not named as defendants in this Complaint, have participated with the Defendant in the violation alleged in this Complaint, and have performed acts and made statements in furtherance thereof.

IV

Trade and Commerce

6. At material times, the Defendant has engaged in the business of underwriting or administering vision care insurance plans (''VSP plans'') in 42 states (46 effective January 1, 1995) and the District of Columbia. The Defendant obtains vision care services for persons covered by VSP plans by establishing panels of contracting doctors, who each sign and agree to comply with the Panel Doctor's Agreement with VSP, which, among other things, governs payment for covered services rendered to VSP patients. The Defendant contracts with approximately 17,000 panel doctors.

7. At material times, the Panel Doctor's Agreement between each panel

doctor and the Defendant has contained a ''most favored nation'' clause, characterized by VSP as a Fee Non-Discrimination Clause, pursuant to which each panel doctor agrees:

(a) Not to charge fees to VSP that are any higher than those charged to the doctor's non-VSP patients, nor those that the doctor accepts from any other non-governmental group, group plan, or panel;

(b) If a published VSP fee schedule would cause payment in excess of the doctor's usual and customary fee, to notify VSP and accept such lower fee as is consistent with the doctor's usual and customary fees; and

(c) If VSP determines that the doctor is charging fees to VSP that are higher than those charged non-VSP patients, VSP shall reduce the doctor's fees accordingly.

8. At material times, in all or parts of many states in which the Defendant does business, it has contracted with a relatively high percentage of optometrists in private practice. In all or parts of many states in which the Defendant does business, payments from the Defendant have constituted a significant portion of most panel doctors' revenue from the provision of vision care services to patients having some form of vision care insurance coverage.

9. Vision care insurance plans seeking to market their plans to employers and other potential patient groups, in competition with the Defendant, need to attract or retain at competitive prices a geographically varied panel comprising a substantial number of qualified optometrists. After the Defendant began actively enforcing the most favored nation clause in its Panel Doctor's Agreement, in all or parts of many states in which the Defendant does business, many of its panel doctors refused to discount their fees to competing vision care insurance plans or to uninsured patients because VSP's most favored nation clause would have required them similarly to lower all of their charges to the Defendant. Because many of the Defendant's panel doctors receive a substantial portion of their professional income from serving VSP patients, the costs to the doctors of having to lower the fees they charge VSP would have been too great. Consequently, the Defendant's most favored nation clause has, in effect, caused many of its panel doctors to charge all of their other patients and other vision care insurance plans, in competition with VSP, fees as high as or higher than those charged to VSP.

10. In all or parts of many states in which the Defendant does business, the Defendant's most favored nation clause has caused large numbers of panel doctors, who otherwise would have discounted their fees to participate in competing vision care insurance plans, to drop out of such plans or to refuse to join such plans. The Defendant's most favored nation clause also has caused a large number of panel doctors, who do contract with vision care insurance plans competing with VSP, to insist, as a condition of continuing such participation, that the plans increase their payments to the levels paid by VSP.

11. Because in all or parts of many states in which the Defendant does business, a relatively large percentage of optometrists in private practice are VSP panel doctors, and because revenue from serving the patients covered by VSP plans is a significant portion of many of those panel doctors' professional income, among other reasons, the Defendant's most favored nation clause has resulted in many competing vision care insurance plans being unable to attract or retain sufficient numbers of panel doctors to serve their members at fee levels below those paid by VSP. In all or parts of many states in which the Defendant does business, the Defendant's most favored nation clause has substantially restricted many competing plans' ability to attract and serve groups of patients on competitive terms.

12. Many corporate employers remit across state lines not insubstantial premium payments to the Defendant for underwriting or administering vision care insurance for their employees.

13. Many corporate employers that remit premiums to the Defendant are businesses that sell products and services in interstate commerce, and the premium levels paid by such businesses affect the prices of the products and services they sell.

14. At material times, the Defendant has used interstate banking facilities and purchased not insubstantial quantities of goods and services across state lines, for use in providing vision care insurance coverage or vision care services to patients.

15. The activities of the Defendant that are the subject of this Complaint have been within the flow of, and have substantially affected, interstate trade and commerce.

V

Violation Alleged

16. Beginning at a time unknown to the Plaintiffs and continuing through at least November, 1994, in all or parts of many states in which Defendant does business, the Defendant entered into agreements with its panel doctors in unreasonable restraint of interstate trade and commerce in violation of section 1 of the Sherman Act, 15 U.S.C. 1. This offense is likely to recur unless the relief hereinafter sought is granted.

17. For the purpose of forming and effectuating these agreements, the Defendant did the following things, among others:

(a) Required panel doctors to agree to the most favored nation clause in the VSP Panel Doctor Agreement, with the effect of restricting the willingness of panel doctors to discount fees for vision care services and substantially reducing discounted fees for vision care services;

(b) Enforced the most favored nation clause in the VSP Panel Doctor agreement; and

(c) Coerced many panel doctors into dropping out of, or charging higher fees to, vision care insurance plans that attempt to compete with the Defendant.

18. These agreements had the following effects, among others, in all or parts of many states in which the Defendant does business:

(a) Price competition among vision care insurance plans has been unreasonably restrained because many competing vision care insurance plans have been unable to obtain or retain a sufficient number of optometrists to provide services to their members at competitive prices because panel doctors have withdrawn from, refused to participate in, or insisted on higher fees from vision care insurance plans that seek to pay them less than the Defendant;

(b) Prices for the provision of vision care services to non-VSP patients and plans in competition with the Defendant have been raised because many VSP panel doctors have opted not to discount their fees to competing vision care insurance plans or to uninsured patients; and

(c) Consumers of vision care services have been deprived of the benefits of free and open competition.

VI

Prayer

Wherefore, the Plaintiff prays:

1. That the Court adjudge and decree that the Defendant entered into unlawful agreements in unreasonable restraint of interstate trade and commerce in violation of section 1 of the Sherman Act, 15 U.S.C. 1.

2. That the Defendant, its members, officers, directors, agents, employees, and successors and all other persons acting or claiming to act on its behalf be enjoined, restrained and prohibited for

a period of five years from, in any manner, directly or indirectly, continuing, maintaining, or renewing these agreements, or from engaging in any other combination, conspiracy, agreement, understanding, plan, program, or other arrangement having the same effect as the alleged violation.

3. That the United States have such other relief as the nature of the case may require and the Court may deem just and proper.

Dated: December 15, 1994.

For Plaintiff:

Anne K. Bingaman,

Assistant Attorney General.

Robert E. Litan,

Deputy Assistant Attorney General.

Mark C. Schechter,

Deputy Director, Office of Operations.

Gail Kursh, D.C. Bar #293118,

Chief, Professions and Intellectual Property Section.

David C. Jordan, D.C. Bar #914093,

Ass't Chief, Professions and Intellectual Property Section, Antitrust Division, Department of Justice.

Steven Kramer,

Richard S. Martin,

Attorneys, Antitrust Division, U.S. Dept. of Justice, 600 E Street, NW., Room 9420, Washington, DC 20530, (202) 307–0997.

In the United States District Court for the District of Columbia

United States of America, Plaintiff, vs. Vision Service Plan, Defendant. Civil Action No. 942693.

Stipulation

It is stipulated by and between the undersigned parties, by their respective attorneys, that:

1. The Court has jurisdiction over the subject matter of this action and over each of the parties hereto, and venue of this action is proper in the Eastern District of California;

2. The parties consent that a Final Judgment in the form hereto attached may be filed and entered by the Court, upon the motion of any party or upon the Court's own motion, at any time after compliance with the requirements of the Antitrust Procedures and Penalties Act (15 U.S.C. 16), and without further notice to any party or other proceedings, provided that plaintiff has not withdrawn its consent, which it may do at any time before the entry of the proposed Final Judgment by serving notice thereof on defendant and by filing that notice with the Court; and

3. Defendant agrees to be bound by the provisions of the proposed Final Judgment pending its approval by the Court. If plaintiff withdraws its consent, or if the proposed Final Judgment is not entered pursuant to the terms of the Stipulation, this Stipulation shall be of no effect whatsoever, and the making of this Stipulation shall be without prejudice to any party in this or in any other proceeding.

4. Defendant agrees to send, within 15 days of the filing of the proposed Final Judgment, a copy of the attached letter, which has been approved by the Antitrust Division, by first-class mail to every VSP Panel Doctor participating at any time since January 1, 1993.

5. Defendant agrees to provide to plaintiff a certificate of compliance with the preceding paragraph within 20 days of the filing of the proposed Final Judgment.

For Plaintiff:

Anne K. Bingaman,

Assistant Attorney General.

Robert E. Litan,

Deputy Assistant Attorney General.

Mark C. Schechter,

Deputy Director, Office of Operations.

Gail Kursh, D.C. Bar #293118,

Chief.

David C. Jordan, D.C. Bar #914093,

Ass't. Chief, Professions and Intellectual Property Section, Antitrust Division, Department of Justice.

For Defendant:

John J. Miles,

D.C. Bar #364054, Ober, Kaler, Grimes & Shriver, Fifth Floor, 1401 Floor, 1401 H Street, NW., Washington, DC 20005–2202, (202) 326–5008.

Steven Kramer,

Richard S. Martin,

Attorneys, Antitrust Division, U.S. Dept. of Justice, 600 E Street, NW., Room 9420, BICN Bldg. Washington, DC 20530, (202) 307–0997.

Barclay L. Westerfeld,

General Counsel, Vision Service Plan, 3333 Quality Drive, Rancho Cordova, CA 95670, (916) 851–5000.

In the United States District Court for the District of Columbia

United States of America, Plaintiff, vs. Vision Service Plan, Defendant. Civil Action No. 94 2693.

Final Judgment

Plaintiff, United States of America, filed its Complaint on December 15, 1994. Plaintiff and Defendant, by their respective attorneys, have consented to the entry of this Final Judgment without trial or adjudication of any issue of fact or law. This Final Judgment shall not be evidence against or an admission by any party about any issue of fact or law or that any violation of law has occurred. Therefore, before the taking of any testimony and without trial or adjudication of any issue of fact or law herein, and upon consent of the parties, it is hereby

Ordered, Adjudged, and Decreed, as follows:

I

Jurisdiction

This Court has jurisdiction over the subject matter of this action and over each of the parties consenting hereto. The Complaint states a claim upon which relief may be granted against the Defendant under section 1 of the Sherman Act, 15 U.S.C. 1.

II

Definitions

As used herein, the term:

(A) ''Defendant'' or ''VSP'' means Vision Service Plan;

(B) ''Panel Doctor's Agreement'' means the VSP Panel Member Agreement by which Defendant contracts with optometrists or ophthalmologists, including all amendments and additions, in effect at any time since January 1, 1992, and during the term of this Final Judgment;

(C) ''Most Favored Nation Clause'' means:

(1) The clause characterized as a Fee Non-Discrimination Clause in paragraph 6 of the VSP Panel Doctor's Agreement, pursuant to which each VSP member doctor agrees:

(a) Not to charge fees to VSP that are any higher than those charged to the doctor's non-VSP patients, nor those that the doctor accepts from any other non-governmental group, group plan, or panel;

(b) If a published VSP fee schedule would cause payment in excess of the doctor's usual and customary fee, to notify VSP and accept such lower fee as is consistent with the doctor's usual and customary fees; and

(c) If VSP determines that the doctor is charging fees to VSP that are higher than those charged non-VSP patients, VSP shall reduce the doctor's fees accordingly; or

(2) Any other existing or future clause in the VSP Panel Doctor's Agreement, VSP policy, or VSP practice having the same purpose or effect, in whole or in part.

(D) ''Non-VSP patients'' means patients who are not members of a plan insured or administered by VSP.

(E) ''Non-VSP plan'' means any plan (other than VSP) responsible for all or part of any expense for vision care services, provided to plan members, pursuant to contractual terms with providers of vision services limiting the fees that providers collect for serving the plan's members.

(F) ''Modal fee'' means the fee charged most frequently during a calendar year by a VSP panel doctor for each service rendered to non-VSP patients and for each service rendered to VSP patients that is not covered by a plan insured or administered by VSP. For example, if in 1993, a VSP panel doctor performed a total of 12 eye examinations on non-VSP patients and charged 3 of those patients $40, 5 of those patients $50, and 4 of those patients $60 for the eye examination, the doctor's modal fee for eye examinations provided to non-VSP patients would be $50.

(G) ''Median fee'' means, considering all fees charged in a calendar year for each service rendered to non-VSP patients and for each service rendered to VSP patients that is not covered by a plan insured or administered by VSP, the fee below and above which there are an equal number of fees (or, if there are an overall equal number of fees under consideration, the fee that is the arithmetic mean of the tow middle fees.)

III

Applicability

This Final Judgment applies to:

(A) The Defendant and to its successors and assigns, and to all other persons (including VSP panel doctors) in active concert or participation with any of them, who have received actual notice of the Final Judgment by personal service or otherwise; and

(B) The Most Favored Nation Clause, as defined in Section II(C) of this Final Judgment, but to no other clause of the VSP Panel Doctor's Agreement, VSP policy, or VSP practice.

IV

Prohibited Conduct

Except as permitted in Section V, Defendant is enjoined and restrained from:

(A) Maintaining, adopting, or enforcing a Most Favored Nation Clause in any VSP Panel Doctor's Agreement, corporate bylaws, policies, rules, regulations, or by any other means or methods;

(B) Maintaining, adopting, or enforcing any policy or practice linking payments made by VSP to any VSP panel doctor to fees charged by the doctor to any non-VSP patient or any non-VSP plan;

(C) Differentiating VSP's payments to, or other treatment of, any VSP panel doctor because the doctor charges any fee lower than that charged by the doctor to VSP, to any non-VSP patient or to any non-VSP plan;

(D) Taking any action to discourage any VSP panel doctor from participating in any non-VSP plan or from offering or charging any fee lower than that paid to the doctor by VSP to any non-VSP patient or any non-VSP plan;

(E) Monitoring or auditing the fees any VSP panel doctor charges any non-VSP patient or any non-VSP plan; and

(F) Communicating in any fashion with any VSP panel doctor regarding the doctor's participation in any non-VSP plan or regarding the doctor's fees charged to any non-VSP patient or to any non-VSP plan.

V

Permitted Activities

Despite any prohibition contained in Section IV of this Final Judgment,

(A) For the purpose of calculating payments to be made to its panel doctors, defendant may request annually that a VSP panel doctor report sufficient information—provided such information is requested uniformly from all panel doctors within a meaningful geographic area comprising zip codes—from which Defendant is able to calculate either the doctor's modal or median fee, for each applicable service, provided by the doctor during the preceding calendar year;

(B) Defendant may calculate the fees that it pays to a VSP panel doctor for services rendered to VSP patients based on either the panel doctor's modal or median fees, provided that Defendant employs a uniform method of calculation at least within each meaningful geographic area, comprising zip codes, in which it does business;

(C) Only for the purposes of verifying whether the information reported by a VSP panel doctor, pursuant to Section V(A), is accurate or of investigating a VSP panel doctor's suspected excessive billing to VSP, upon reasonable belief that the reported fees may be inaccurate or excessive, and subject to the reasonable convenience of the VSP panel doctor, Defendant may audit the VSP panel doctor's charges to non-VSP patients;

(D) Consistently with Sections IV(C) and (D), Defendant may devise and utilize a fee system for doctors who apply for VSP panel membership after the date of this Final Judgment that is different from the system used to compensate current panel doctors, and that system may be based on the average fees VSP pays in a meaningful geographic area comprising zip codes;

(E) Consistently with Sections IV(C) and (D), Defendant may elect to maintain current fees for panel doctors at their existing levels and may base any future fee increases on the Consumer Price Index, VSP's own financial growth, or any other meaningful economic indicator; and

(F) Consistently with Sections IV(C) and (D), Defendant may impose penalties on panel doctors who have misrepresented their fees or the frequency with which they charge those fees.

VI

Nullification

The Most Favored Nation Clause shall be null and void and Defendant shall impose no further obligation arising from it on any VSP panel doctor. Within 60 days of entry of this Final Judgment, Defendant shall disseminate to each present VSP panel doctor an addendum to the Panel Doctor's Agreement, nullifying the Most Favored Nation Clause, and Defendant shall eliminate the Most Favored Nation Clause from all Panel Doctor's Agreements entered into after entry of this Final Judgment.

VII

Complance Measures

The Defendant shall:

(A) Distribute, within 60 days of the entry of this Final Judgment, a copy of this Final Judgment to: (1) All VSP officers and directors; (2) VSP employees who have any responsibility for approving, disapproving, monitoring, recommending, or implementing any provisions in agreements with VSP panel doctors; and (3) all present VSP panel doctors and all former VSP panel doctors whom VSP should reasonably know have resigned because of the Most Favored Nation Clause;

(B) Distribute in a timely manner a copy of this Final Judgment to any officer, director, or employee who succeeds to a position described in Section VII(A) (1) or (2);

(C) Obtain from each present or future officer, director, or employee designated in Section VII(A) (1) or (2), within 60 days of entry of this Final Judgment or of the person's succession to a designated position, a written certification that he or she: (1) Has read, understands, and agrees to abide by the terms of this Final Judgment; and (2) has been advised and understands that his or her failure to comply with this Final Judgment may result in conviction for criminal contempt of court;

(D) Maintain a record of persons to whom the Final Judgment has been distributed and from whom, pursuant to Section VI(D), the certification has been obtained;

(E) The Defendant shall notify all former VSP panel doctors whom it should reasonably know have resigned

because of the Most Favored Nation Clause, that they are reinstated, on terms and conditions that VSP may establish consistently with this Final Judgment, unless they do not desire reinstatement; and

(F) Report to the Plaintiff any violation of the Final Judgment.

VIII

Certification

(A) Within 75 days of the entry of this Final Judgment, the Defendant shall certify to the Plaintiff whether it has: (1) Disseminated contractual addenda pursuant to Section VI, (2) distributed the Final Judgment in accordance with Section VII(A), and (3) obtained certifications in accordance with Section VII(C).

(B) For five years after the entry of this Final Judgment, on or before its anniversary date, the Defendant shall file with the Plaintiff an annual Declaration as to the fact and manner of its compliance with the provisions of Sections IV, V, VI, and VII.

IX

Plaintiff's Access

(A) To determine or secure compliance with this Final Judgment and for no other purpose, duly authorized representatives of the Plaintiff, upon written request of the Assistant Attorney General in charge of the Antitrust Division and on reasonable notice to the Defendant made to its principal office, shall be permitted, subject to any legally recognized privilege.

(1) Access during the Defendant's office hours to inspect and copy all documents in the possession or under the control of the Defendant, who may have counsel present, relating to any matters contained in this Final Judgment; and

(2) subject to the reasonable convenience of the Defendant and without restraint or interference from it, to interview officers, employees or agents of the Defendant, who may have Defendant's counsel and/or their own counsel present, regarding such matters.

(B) Upon the written request of the Assistant Attorney General in charge of the Antitrust Division made to the Defendant's principal office, the Defendant shall submit such written reports, under oath if requested, relating to any matters contained in this Final Judgment as may be reasonably requested, subject to any legally recognized privilege.

(C) No information or documents obtained by the means provided in Section IX shall be divulged by the Plaintiff to any person other than duly authorized representatives of the Executive Branch of the United States, except in the course of legal proceedings to which the United States is a party, or for the purpose of securing compliance with this Final Judgment, or as otherwise required by law.

(D) If at the time information or documents are furnished by the Defendant to Plaintiff, the Defendant represents and identifies in writing the material in any such information or documents to which a claim of protection may be asserted under Rule 26(c)(7) of the Federal Rules of Civil Procedure, and the Defendant marks each pertinent page of such material, ''subject to claim of protection under Rule 26(c)(7) of the Federal Rules of Civil Procedure,'' then 10 days notice shall be given by Plaintiff to the Defendant prior to divulging such material in any legal proceeding (other than a grand jury proceeding) to which the Defendant is not a party.

X

Further Elements of the Final Judgment

(A) This Final Judgment shall expire five years from the date of its entry.

(B) Jurisdiction is retained by this Court for the purpose of enabling either of the parties to this Final Judgment, but no other person, to apply to this Court at any time for further orders and directions as may be necessary or appropriate to carry out or construe this Final Judgment, to modify or terminate any of its provisions, to enforce compliance, and to punish violations of its provisions.

(C) Entry of this Final Judgment is in the public interest.

United States District Judge

In the United States District Court for the District of Columbia

United States of America, Plaintiff, vs. Vision Service Plan, Defendant. Case No. 1:94CV02693 TPJ.

Competitive Impact Statement

Pursuant to Section 2(b) of the Antitrust Procedures and Penalties Act, 15 U.S.C. 16(b)-(h), the United States submits this Competitive Impact Statement relating to the proposed Final Judgment submitted for entry in this civil antitrust proceeding.

I

Nature and Purpose of the Proceeding

On December 15, 1994, the United States filed a civil antitrust Complaint alleging that Vision Service Plan (VSP), in all or parts of many states in which VSP does business, entered into agreements with its panel doctors that unreasonably restrain competition by restraining discounting of fees for vision care services in violation of section 1 of the Sherman Act, 15 U.S.C. 1. The Complaint seeks injunctive relief to enjoin continuance of the violation.

Entry of the proposed Final Judgment will terminate this action, except that the Court will retain jurisdiction over the matter for further proceedings that may be required to interpret, enforce or modify the Judgment or to punish violations of any of its provisions.

II

Practices Giving Rise to the Alleged Violation

Defendant VSP is a California not-for-profit corporation headquartered in Rancho Cordova, California. It controls the operations of vision care insurance plans, operated under the name of Vision Service Plan, in 46 states and the District of Columbia. VSP contracts with businesses, government agencies, health care insurers, and other organizations to provide pre-paid vision care coverage to their employees or beneficiaries. In 1994, VSP plans covered about 15 million persons; VSP revenues in 1994 totalled about $650 million.

VSP contracts directly with doctors—primarily optometrists but also with a relatively small number of ophthalmologists—in private practice, whom it refers to as panel doctors, to provide vision care services—consisting essentially of diagnostic and dispensing services and optical materials, such as corrective lenses and frames—to patients covered by VSP plans. VSP's agreements with its panel doctors (termed the Panel Doctor's Agreement) require its panel doctors to report to VSP periodically a listing of the doctor's usual and customary fees charged to non-VSP patients. VSP typically has paid panel doctors fees that are derived from those usual and customary fees, subject to a discount and area-specific fee caps that VSP imposes.

During 1994, VSP contracted with about 17,000 panel doctors. In all or parts of many states in which VSP does business, it contracts with a high percentage of an area's optometrists. For example, in 1993, VSP reported that 98% of all optometrists licensed in Nevada were VSP panel doctors. In California, VSP contracts with approximately 4,000 panel doctors, constituting about 90% of California optometrists in independent private practice. Moreover, in all or parts of many states, VSP's payments to optometrists constitute a significant part

of their professional income. In California, for example, VSP plans cover over 5.7 million members accounting for total annual revenue of approximately $200 million.

Against this background, Defendant VSP's Panel Doctor's Agreement contains a so-called fee non-discrimination clause, which is similar, in substance, to clauses commonly characterized in the health care industry as most favored nation (MFN) clauses. VSP's MFN clause requires that each panel doctor charge VSP no more than the lowest price that the doctor charges any non-VSP patient or any other vision care group or insurance plan. Accordingly, if a VSP panel doctor wishes to reduce the fees that the doctor charges to any non-VSP plan or patient below the amounts that VSP pays the doctor, the MFN requires the doctor to reduce to that same level the fees the doctor charges to VSP. For the reasons described below, however, VSP's MFN clause has actually caused many doctors not to reduce their fees to VSP, but instead to charge other vision care insurance plans and non-VSP patients fees that are at least as high as those paid to the doctor by VSP.

The Complaint alleges that, beginning at a time unknown to Plaintiff and continuing through at least November, 1994, in all or parts of many states in which VSP does business, VSP entered into agreements with its panel doctors that had the effect of unreasonably restraining optometrists' discounting of fees for vision care services to vision care insurance plans competing with VSP or to other purchasers of vision care services, in violation of section 1 of the Sherman Act. The Complaint alleges that, for the purpose of forming and effectuating these agreements, (1) VSP required its panel doctors to agree to the MFN clause in VSP's Panel Doctor's Agreement, which had the effect of restricting the willingness of its panel doctors to discount fees for vision care services and substantially reducing discounted fees for vision care services; (2) VSP enforced the MFN clause; and (3) VSP coerced many panel doctors into dropping out of, or charging higher fees to, vision care insurance plans that compete with VSP.

The Complaint further alleges that, in all or parts of many states, the challenged agreements have had the effect of (1) unreasonably restraining price competition among vision care insurance plans because many competing vision care insurance plans have been unable to obtain or retain a sufficient number of optometrists to provide services to their members at competitive prices because panel doctors have withdrawn from, refused to participate in, or insisted on higher fees from vision care insurance plans that seek to pay them less than the Defendant; and (2) raising prices for the provision of vision care services to non-VSP patients and plans in competition with VSP because, as a result of the MFN, many VSP panel doctors have opted not to discount their fees to competing vision care insurance plans or to uninsured patients.

VSP's adoption and enforcement of the MFN in its Panel Doctor's Agreement has reduced the willingness of many optometrists to discount their fees for the following reasons. Since many VSP panel doctors in all or parts of many states receive a significant portion of their professional income from treating VSP patients, they have found that discounting their fees below VSP payments to non-VSP patients or competing vision care programs, and consequently reducing their income from VSP by virtue of the MFN clause, is unprofitable. For the same reason, VSP panel doctors are unwilling to drop their participation in VSP to avoid the MFN and be able to discount their fees to competing discount vision care plans.

In a number of reported situations, optometrists had reduced their fees in a range of 20–40% below their usual fees to participate in vision care insurance plans competing with VSP. Subsequently, fearing VSP's enforcement of the MFN clause, however, many VSP panel doctors resigned from such competing plans or insisted that the plans pay them fees that are at least as high as VSP's to avoid having to lower their fees charged to VSP. Consequently, VSP's MFN clause has substantially restrained both discounting arrangements that were already in place and potential discounting that otherwise would have occurred but for the MFN. Thus, VSP's MFN clause has severely hampered competing vision care insurance plans' efforts to attract or retain, at competitive prices, a sufficient, geographically dispersed panel of qualified optometrists to make their plans commercially marketable.

In all or parts of many states, VSP's MFN clause has effectively deprived vision care consumers of the benefits of free and open competition. VSP's MFN clause has deprived uninsured patients of price competition among optometrists who—because of the MFN clause—are unwilling to discount their fees below VSP levels. VSP's MFN clause has also reduced purchasers' opportunities to choose among competing vision care insurance plans offering different combinations of optometrists and prices. This reduction in the scope of vision care coverage alternatives, such as managed care and other discount plans, has substantially reduced the cost savings to consumers that such competing plans could provide if they were able to contract for optometrists' services at fees below VSP levels. Indeed, claims data suggest generally that average claims, based on panel doctor's usual charges, filed with VSP for services rendered in all or parts of many states where VSP contracts with a substantial percentage of optometrists in private practice and does a substantial amount of business range between $95–110, compared to $70–80 in some other areas where VSP has less of a market presence.

III

Explanation of the Proposed Final Judgment

The Plaintiff and VSP have stipulated that the Court may enter the proposed Final Judgment after compliance with the Antitrust Procedures and Penalties Act, 15 U.S.C. 16(b)–(h). The proposed Final Judgment provides that its entry does not constitute any evidence against or admission of any party concerning any issue of fact or law.

Under the provisions of section 2(e) of the Antitrust Procedures and Penalties Act, 15 U.S.C. 16(e), the proposed Final Judgment may not be entered unless the Court finds that entry is in the public interest. Section X(C) of the proposed Final Judgment sets forth such a finding.

The proposed Final Judgment is intended to ensure that VSP eliminates its MFN clause and stops all similar practices that unreasonably restrain competition among optometrists and vision care insurance plans.

A. Scope of the Proposed Final Judgment

Section III (A) of the proposed Final Judgment provides that the Final Judgment shall apply to VSP and to its successors and assigns, and to all other persons (including VSP panel doctors) in active concert or participation with any of them, who shall have received actual notice of the Final Judgment by personal service or otherwise. Section III(B) of the proposed Final Judgment limits application of the Judgment to VSP's MFN clause, as defined in Section II(C) of the Judgment, but to no other clause in the VSP Panel Doctor's Agreement, VSP policy, or VSP practice.

In the Stipulation to the proposed Final Judgment, VSP has agreed to be bound by the provisions of the proposed Final Judgment, pending its approval by the Court. VSP has also agreed to send,

within 15 days of the filing of the proposed Final Judgment, a copy of the attached letter, which has been approved by the Antitrust Division, to every VSP panel doctor participating at any time since January 1, 1993.

B. Prohibitions and Obligations

Under Section IV(A) of the proposed Final Judgment, VSP is enjoined and restrained for a period of five years from maintaining, adopting, or enforcing an MFN clause in any VSP Panel Doctor's Agreement, or in its corporate by-laws, policies, rules, regulations, or by any other means or methods.

Subject to activities permitted in Section V of the proposed Final Judgment, other provisions of the Final Judgment seek to ensure that the MFN clause's anticompetitive effects cannot be achieved in other ways. Specifically, Section IV(B) enjoins VSP from maintaining, adopting, or enforcing any policy or practice linking payments made by VSP to any VSP panel doctor to fees charged by the doctor to any non-VSP patient or any non-VSP plan; Section IV(C) enjoins VSP from differentiating VSP's payments to, or other treatment of, any VSP panel doctor because the doctor charges any fee lower than that charged by the doctor to VSP, to any non-VSP patient or to any non-VSP plan; Section IV(D) enjoins VSP from taking any action to discourage any VSP panel doctor from participating in any non-VSP plan or from offering or charging any fee lower than that paid to the doctor by VSP to any non-VSP patient or any non-VSP plan; Section IV(E) enjoins VSP from monitoring or auditing the fees any VSP panel doctor charges to any non-VSP patient or any non-VSP plan; and Section IV(F) enjoins VSP from communicating in any fashion with any VSP panel doctor regarding the doctor's participation in any non-VSP plan or regarding the doctor's fees charged to any non-VSP patient or to any non-VSP plan.

Section V of the Proposed Final Judgment describes several activities that VSP may elect to undertake in calculating the payments it makes in the future to its panel doctors that, if carried out consistently with the restrictions of Section V and applicable injunctive provisions contained in Section IV, will not constitute a violation of the Judgment. Essentially, the restrictions of Section V seek to ensure that VSP does not discriminate against VSP panel doctors who choose to discount fees to non-VSP insurance plans or to uninsured patients, with the effect of discouraging such discounting. Section V(A) allows VSP to request annually sufficient information to enable VSP to calculate either a doctor's modal fee (the doctor's most frequently charged fee) or median fee (the fee above and below which the doctor charges other fees an equal number of times) for each service provided by all VSP panel doctors in a meaningful geographic area specified by zip codes; Section V(C) allows VSP to verify, through reasonable audit procedures, the information provided to it by its panel doctors pursuant to Section V(A) and to check into any reasonable suspicions VSP might have of excessive billings by panel doctors; and under Section V(F), VSP may impose penalties in a nondiscriminatory manner on panel doctors for billing misrepresentations.

Section V(D) permits VSP, if it chooses, to devise and use a new fee system for doctors who become VSP panel doctors after the entry of the Judgment, based on the average fees that VSP pays its existing panel doctors within a meaningful area specified by zip codes. Under Section V(E), VSP also may elect to maintain its current fee levels for its current panel doctors and base any future fee increases on the Consumer Price Index, VSP's own financial growth or any other meaningful economic indicator.

Section VI of the Final Judgment declares that VSP's MFN clause, or any future clause, policy or practice having the same purpose or effect, null and void.

Section VII of the Final Judgment sets forth several compliance measures that VSP must fulfill. Section VII(A) requires that, within 60 days of entry of the Final Judgment, VSP provide a copy of the Final Judgment to all VSP officers and directors, VSP employees having responsibility for VSP Panel Doctor Agreements, and all present VSP panel doctors or former panel doctors whom VSP reasonably believes resigned from the VSP plan because of the MFN. Sections VII(B), (C) and (D) require VSP to provide a copy of the Final Judgment to future officers, directors and employees having responsibility for VSP Panel Doctor Agreements and to obtain and maintain records of such persons' written certifications that they have read, understand and will abide by the terms of the Final Judgment. Section VII(E) requires VSP to notify all former VSP panel doctors whom VSP reasonably believes resigned from a VSP plan because of the MFN and to reinstate them as panel doctors if they so desire; Section VII(F) obligates VSP to report to Plaintiff any violation of the Final Judgment.

The Final Judgment also contains provisions, in Section VIII, obligating VSP to certify its compliance with specified obligations of Sections IV, V, VI and VII of the Final Judgment. In addition, Section IX of the Final Judgment sets forth a series of measures by which the Plaintiff may have access to information needed to determine or secure VSP's compliance with the Final Judgment.

C. Effect of the Proposed Final Judgment on Competition

By eliminating the MFN clause, the relief ordered by the proposed Final Judgment will enjoin and eliminate a substantial restraint on price competition between VSP and other vision care insurance plans and among optometrists, in all or parts of many states. It will do so by eliminating the disincentives created by the MFN clause that inhibit optometrists' willingness to discount their fees and to join non-VSP plans offering payments below VSP levels. The Judgment also prevents VSP from taking any other action to dissuade or discourage optometrists from discounting or participating in competing vision care insurance plans. Consequently, non-VSP plans' efforts to attract and maintain viable panels of optometrists to serve their members will no longer be hampered.

On the other hand, VSP will be able to compete on the same terms with other vision care insurance plans because it will not be restricted from seeking and obtaining lower fees through activities permitted in Section V of the Judgment or by other means, such as a fee schedule—an approach used by other vision care insurance plans—that are unlikely to have anticompetitive effects. Though Section V does not allow VSP routinely to base its payments on the lowest fee charged by its panel doctors to any non-VSP plan or patient—as VSP has done through its MFN clause—Section V does permit VSP to base its payments to panel doctors on their median or modal fees charged to non-VSP plans and patients, two measures of usual and customary fees that are not linked directly to the lowest fee charged.

In view of the substantial percentage of vision care patients who are not covered by a vision care insurance plan, a VSP panel doctor's median or modal fee is not likely to be the lowest fee charged by the doctor to any non-VSP plan or patient. Thus, VSP's possible use of median or modal fees, to set payments to panel doctors, is unlikely to create disincentives to discount. The activities that Section V permits VSP to engage in are unlikely, therefore, to replicate the effects of VSP's MFN clause or consequently to perpetuate the

competitive concerns raised by the MFN clause.

The proposed Final Judgment's elimination of VSP's MFN clause will restore to vision care insurance plans and consumers, in all or parts of many states, the benefits of free and open competition. Consequently, vision care insurance plans should be able to achieve cost savings that they can pass on to consumers, and consumers should have access to a more competitive selection of vision care insurance alternatives and optometrists.

IV

Alternatives to the Proposed Final Judgment

The alternative to the proposed Final Judgment would be a full trial on the merits of the case. In the view of the Department of Justice, such a trial would involve substantial costs to both the United States and VSP and is not warranted because the proposed Final Judgment provides all of the relief that appears necessary to remedy the violations of the Sherman Act alleged in the Complaint.

V

Remedies Available to Private Litigants

Section 4 of the Clayton Act, 15 U.S.C. 15, provides that any person who has been injured as a result of conduct prohibited by the antitrust laws may bring suit in federal court to recover three times the damages suffered, as well as costs and reasonable attorney's fees. Entry of the proposed Final Judgment will neither impair nor assist in the bringing of such actions. Under the provisions of Section 5(a) of the Clayton Act, 15 U.S.C. 16(a), the Final Judgment has no *prima facie* effect in any subsequent lawsuits that may be brought against the Defendant in this matter.

VI

Procedures Available for Modification of the Proposed Final Judgment

As provided by the Antitrust Procedures and Penalties Act, any person believing that the proposed Judgment should be modified may submit written comments to Gail Kursh, Chief; Professions & Intellectual Property Section, Department of Justice; Antitrust Division, 600 E Street, NW., Room 9300; Washington, DC 20530, within the 60-day period provided by the Act. Comments received, and the Government's responses to them, will be filed with the Court and published in the **Federal Register**. All comments will be given due consideration by the Department of Justice, which remains free, pursuant to Paragraph 2 of the Stipulation, to withdraw its consent to the proposed Final Judgment at any time before its entry if the Department should determine that some modification of the Judgment is necessary to the public interest. The proposed Judgment itself provides that the Court will retain jurisdiction over this action, and that the parties may apply to the Court for such orders as may be necessary or appropriate for the modification, interpretation, or enforcement of the Judgment.

VII

Determinative Documents

No materials and documents of the type described in section 2(b) of the Antitrust Procedures and Penalties Act, 15 U.S.C. 16(b), were considered in formulating the proposed Judgment. Consequently, none are filed herewith.

Dated: January 13, 1995.

Respectfully submitted,

Steven Kramer,

Richard S. Martin,

Attorneys, Antitrust Division, U.S. Dept. of Justice, 600 E Street, NW., Room 9420, Washington, DC 20530, (202) 307–0997.

Attachment

Vision Service Plan,
3333 Quality Drive, Rancho Cordova, CA 95670–7985, (916) 851–5000—(800) 852–7600, Telefax (916) 851–4855

Dear VSP Doctor: VSP has entered into an agreement with the United States Department of Justice which will require VSP to eliminate its fee non-discrimination (FND) policy. This is the policy which is sometimes called a most favored nations clause and prohibits a member doctor from charging VSP more for services than the doctors accepts from any other source for the same services. As you know, VSP has always contended it has consistently enforced the fee non-discrimination policy to ensure our groups are provided the most cost effective services that may be obtained from VSP member doctors. Without cost effectiveness, the groups have little incentive to buy from Vision Service Plan.

Effective immediately, VSP will no longer reduce a doctor's fee because that doctor accepts a lower fee for the same service from another source and, your Panel Doctor's Agreement with Vision Service Plan is amended to eliminate Paragraph 6. Please keep this letter with your VSP agreement and consider it as an addendum. The Justice Department has agreed that existing fees may stay at their current levels until a new fee payment mechanism can be put in place. In the future, VSP's payments will be based on the range of fees the doctor accepts, rather than the lowest fee.

We have agreed to eliminate the FND policy to avoid long and expensive litigation with the United States Department of Justice. We feel our resources need to be maintained to support our mission of providing our member doctors with more VSP patients and providing the best vision care in the nation. The vision care market is changing rapidly. Institutions like insurance companies, HMOs, Medicaid and the government in general are having a tremendous effect on health care and its costs. VSP is striving, more than any other organization, to look out for the interests of our member doctors and their patients. VSP is, and will continue to be, the best source of patients for our member doctors.

This policy change may have significant impact on some VSP member doctors. We will need to develop new fee-setting systems which will make VSP more competitive but are not based on the lowest fee which a doctor accepts.

We will be in further communication with you when a new fee system has been established. Our Board is confident we will be able to devise a system which will meet your needs and meet VSP's competitive needs for the future while satisfying the Justice Department's guidelines.

Thank you for your patience, understanding and continued support of VSP.

Denis Humphreys,

Chairman of the Board.

In the United States District Court for the District of Columbia

United States of America, Plaintiff, vs. Vision Service Plan, Defendant. Civil Action No. .

Certificate of Service

I certify that I caused a copy of the United States' Competitive Impact Statement to be served on January 13, 1995, by Federal Express to:

Barclay L. Westerfeld, General Counsel, Vision Service Plan, 3333 Quality Drive, Rancho Cordova, California 95670

and by courier to:

John J. Miles, Ober, Kaler, Grimes & Shriver, 1401 H Street NW., Fifth Floor, Washington, DC 20005–2110

Dated: January 13, 1995.

Steven Kramer,

Attorney, Antitrust Division, Department of Justice, 600 E Street NW., Room 9420, Washington, DC 20530, (202) 307–1029.

[FR Doc. 95–1988 Filed 1–25–95; 8:45 am]

BILLING CODE 4410–01–M

United States v. El Paso Natural Gas Co.; Proposed Final Judgment and Competitive Impact Statement

Notice is hereby given pursuant to the Antitrust Procedures and Penalties Act, 15 U.S.C. § 16(b)–(h), that a proposed Final Judgment, Stipulation and Competitive Impact Statement have been filed with the United States District Court for the District of

Columbia in *United States* v. *El Paso Natural Gas Company,* Civil No. 1:95CV00067 as to El Paso Natural Gas Company (''El Paso'').

The Complaint alleges that El Paso forced well operators seeking to connect natural gas wells to El Paso's gas gathering system in the San Juan Basin of New Mexico and Colorado to also purchase meter installation service from El Paso, when the operators might otherwise have preferred to purchase such installation elsewhere or on different terms.

The proposed Final Judgment enjoins El Paso from requiring well operators to purchase meter installation only from El Paso as a condition of receiving natural gas gathering services from El Paso in the San Juan Basin. The proposed Final Judgment also enjoins El Paso from setting and implementing standards and procedures related to meter installation for wells connected to its San Juan gathering system that would enable El Paso to discriminate against persons providing meter installation in favor of its own meter installation services.

Public comment on the Proposed Final Judgment is invited within the statutory 60-day comment period. Such comments and responses thereto will be published in the **Federal Register** and filed with the Court. Comments should be directed to Roger Fones, Chief, Transportation, Energy and Agriculture Section, Room 9104, U.S. Department of Justice, Antitrust Division, 555 4th Street, NW., Washington, DC 20001 (telephone: 202–307–6351).

Constance K. Robinson,

Director of Operations, Antitrust Division.

The United States District Court for the District of Columbia

United States of America, Plaintiff, v. El Paso Natural Gas Company, Defendant. Case Number 1:95CV00067; Judge: Harold H. Greene; Deck Type: Antitrust; Date Stamp: 01/12/95.

Complaint

The United States of America, through its attorneys, acting under the direction of the Attorney General of the United States, brings this civil action to obtain equitable and other relief against the defendant named herein and alleges as follows:

I

Nature of this Action

1. The United States brings this civil antitrust action to obtain injunctive relief against an anticompetitive tying arrangement of the defendant El Paso Natural Gas Company (''El Paso'') that violates Section 1 of the Sherman Act, 15 U.S.C. § 1.

2. El Paso owns and operates a natural gas gathering system located in the San Juan Basin of the United States, which it uses to transport natural gas produced in the basin to points of connection with mainline interstate pipelines. El Paso's San Juan gathering system has market power for gas gathering for wells in the San Juan Basin. Many San Juan Basin producers have no alternative to El Paso for gas gathering. El Paso requires persons operating gas wells in the San Juan Basin to purchase meter installation service from it as a condition of connecting a well or wells to its gathering system.

3. El Paso's practice of tying meter installation to its gas gathering service has caused many well operators seeking to connect a well to El Paso's gathering system to purchase meter installation service at a cost higher than they otherwise would have paid, to wait longer for installation than otherwise necessary, or both.

4. The United States seeks an injunction, pursuant to Sherman Act § 4, 15 U.S.C. § 4, prohibiting El Paso from conditioning the connection of a well to its San Juan gathering system upon a well operator agreeing to purchase meter installation from El Paso.

II

Jurisdiction, Venue and Interstate Commerce

5. This complaint is filed and this action is instituted under Section 4 of the Sherman Act, 15 U.S.C. § 4, to prevent and restrain the continuing violation by El Paso, as hereinafter alleged, of Section 1 of the Sherman Act, 15 U.S.C. § 1. The Court has jurisdiction over this matter pursuant to 28 U.S.C. §§ 1331 and 1337.

6. Venue is proper in this district under 15 U.S.C. § 22 and 28 U.S.C. § 1391(c), because El Paso transacts business and is found within this district.

7. El Paso is a Delaware corporation with its principal place of business in El Paso, Texas. El Paso's total revenues for 1993 were $908 million.

8. El Paso owns and operates one of the nation's largest natural gas transmission systems, which it uses to transport natural gas from supply regions in New Mexico, Colorado, Texas and Oklahoma to end-users located throughout the southwestern United States. El Paso's interstate natural gas pipeline system provides 48 percent of the total interstate pipeline capacity serving California. El Paso is also the principal interstate natural gas pipeline system serving Arizona, southern Nevada, New Mexico, and El Paso, Texas. Thus, El Paso is engaged in, and its activities substantially affect, interstate commerce.

III

El Paso's Natural Gas Gathering System in the San Juan Basin

9. In addition to its mainline, interstate natural gas transmission services, El Paso provides natural gas gathering services in various gas producing basins in the United States, including the San Juan Basin. The San Juan Basin is located primarily in northwestern New Mexico and southern Colorado.

10. Gathering services include collecting natural gas at the well-head and transporting the gas to locations where the gas can enter mainline interstate transmission pipelines. ''Gathering system'' refers to the facilities used to provide gathering service.

11. El Paso's San Juan gathering system is spread throughout the basin and includes thousands of miles of pipeline and over 9,500 meter stations. Approximately 200 new wells are connected to El Paso's gathering system each year. El Paso gathers over 855 million cubic feet per day of gas per year in the San Juan Basin.

12. Although there are other gas gathering companies that provide gathering in the San Juan Basin, most wells are able to connect to only one of these systems. Many well operators have no practicable alternative to using El Paso's gathering system to get their gas out of the San Juan Basin.

IV

El Paso's Meter Installation Practice

13. A meter measures the volume of natural gas flowing from a well or wells into a gathering system. The volume measurements provided by the meters are necessary to calculate charges to well operators for gas gathering services.

14. El Paso has required or otherwise coerced its gathering customers to purchase meter installation from it along with gathering services. The term ''meter installation'' as used in this Complaint means the provision of certain service necessary to connect a well to El Paso's gathering system, including the construction and installation of the metering equipment and the well-tie line. A well-tie line is the pipe that connects the metering equipment to the gathering system.

15. When a well operator contacts El Paso seeking to connect a well to El Paso's San Juan gathering system, it is El Paso's practice to inform the operator

that El Paso will provide the necessary meter installation. The well operator generally must agree to pay El Paso a flat fee for the construction and installation of the meter equipment necessary to connect the well to El Paso's system. El Paso will not begin to install the meter until the operator has prepaid the installation charge.

16. As an interstate pipeline, El Paso's gathering services and rates are regulated by the Federal Energy Regulatory Commission (''FERC'') in accordance with the Natural Gas Act (''NGA''), 15 U.S.C. §§ 717–717W, and the Natural Gas Policy Act (''NGPA''), 15 U.S.C. §§ 3302–3432. Under the NGA, all rates and charges for any transportation or production area service subject to FERC jurisdiction must be ''just and reasonable'' and shown on tariff schedules filed with the FERC. The tariffs filed by El Paso at the FERC set forth the minimum and maximum rates that El Paso may charge for mainline transportation and production area services, including gathering.

17. El Paso charges well operators separately for meter installation and for its gathering service. El Paso's FERC tariff for gathering services in the San Juan Basin does not include a rate for meter installation. Although the FERC must approve the maximum rate that El Paso can charge for gathering, it does not regulate the price El Paso may charge for meter installation. There are no FERC regulations that require El Paso to perform meter installation or that would prohibit well operators from installing their own meters.

18. The speed with which a well can be connected to the gathering system is a significant factor in determining the potential profitability of that well. Once a well operator has agreed that El Paso will perform the meter installation, the well operator must rely on El Paso to schedule that installation. In many instances, El Paso has taken a significantly longer time to complete meter installation than it would have taken if the well operator had been able to use an alternative to El Paso.

19. El Paso contracts with outside construction companies in the San Juan Basin to perform the meter installation for El Paso. These construction companies follow El Paso's specifications regarding the type of metering equipment and the manner of installation.

20. There are numerous construction companies in the San Juan Basin that can properly perform meter installation. Since 1990, El Paso has used three different outside construction companies to perform meter installation.

21. El Paso does not manufacture the meters it uses in its meter installations. Metering equipment meeting El Paso's specifications is available from national companies or their agents to anyone seeking to purchase such equipment.

22. During the past few years, a number of well operators have requested permission from El Paso to do meter installation themselves, rather than purchase the service from El Paso, and have been told by El Paso that they had to use El Paso's meter installation service if they wanted to connect a well to El Paso's gathering system.

23. Other well operators have within the last three years requested to use someone other than El Paso to install meters when connecting a well to El Paso's San Juan gathering system. These well operators have abandoned their efforts to install their own meters because of anticipated delays and unreasonable requirements imposed by El Paso. In order to avoid these delays, these operators agreed to purchase meter installation from El Paso rather than an alternative provider.

V

Violation Alleged

24. El Paso's provision of meter installation to well operators for well connections in the San Juan Basin constitutes an agreement or agreements within the meaning of Section 1 of the Sherman Act.

25. Natural gas gathering and meter installation are separate products.

26. El Paso has market power for gas gathering from many wells located in the San Juan Basin.

27. The amount of commerce affected in the market for meter installation service in the San Juan Basin is substantial.

28. El Paso forces well operators to use El Paso for meter installation when they might otherwise have preferred to purchase such installation elsewhere or on different terms.

29. El Paso's practice of tying meter installation to gas gathering in the San Juan Basin unreasonably restrains trade and is unlawful per se under Section 1 of the Sherman Act.

30. The effect of El Paso's unlawful tying practice has been to force well operators to pay a higher price for meter installation than they might otherwise have paid, to wait longer for meter installation than otherwise necessary, or both.

Prayer for Relief

Wherefore, the plaintiff the United States prays that:

1. El Paso be enjoined from requiring well operators to purchase meter installation only from El Paso as a condition of receiving gathering services from El Paso in the San Juan Basin;

2. El Paso be enjoined from setting and implementing standards and procedures relating to meter installation for wells connected to its San Juan gathering system that would enable El Paso to discriminate among persons providing meter installation in favor of its own installation services;

3. the United States be granted such other relief that the Court may deem just and proper; and

4. the United States recover costs in this action.

Dated: January ____, 1995.

Anne K. Bingaman,

Assistant Attorney General.

Robert E. Litan,

Deputy Assistant Attorney General.

Mark C. Schechter,

Deputy Director of Operations, Antitrust Division, U.S. Department of Justice, Washington, D.C. 20530.

Roger W. Fones,

Chief.

Donna N. Kooperstein

Assistant Chief.

Jade Alice Eaton,

Attorney, D.C. Bar No. 939629.

Jill A. Ptacek,

Attorneys, Antitrust Division, U.S. Department of Justice, 555 4th Street, N.W. Washington, D.C. 20001, (202) 307–6316.

In the United States District Court for the District of Columbia

United States of America, Plaintiff, v. El Paso Natural Gas Company, Defendant. Civil Action No.: 95–0067.

Stipulation

It is stipulated by and between the undersigned parties, by their respective attorneys that:

1. The Court has jurisdiction over the subject matter of this action and over each of the parties thereto, and venue of this action is proper in the District of Columbia;

2. The parties consent that a Final Judgment in the form hereto attached may be filed and entered by the Court, upon the motion of any party or upon the Court's own motion, at any time after compliance with the requirements of the Antitrust Procedures And Penalties Act (15 U.S.C. § 16), and without further notice to any party or other proceedings, provided that Plaintiff has not withdrawn its consent, which it may do at any time before the entry of the proposed Final Judgment by serving notice thereof on Defendants and by filing that notice with the Court;

3. In the event plaintiff withdraws its consent or if the proposed Final Judgment is not entered pursuant to this Stipulation, this Stipulation shall be of no effect whatsoever, and the making of this Stipulation shall be without prejudice to any party in this or in any other proceeding.

This 6th day of January, 1995

For the Plaintiff the United States of America:

Roger W. Fones,

Chief, Transportation, Energy, and Agriculture Section.

Donna N. Kooperstein,

Assistant Chief, Transportation, Energy, and Agriculture Section.

Jade A. Eaton,

Attorney, Transportation, Energy, and Agriculture Section.

Jill A. Ptacek,

Attorney, Transportation, Energy, and Agriculture Section.

For the Defendant El Paso Natural Gas Company:

Mary Anne Mason,

Esquire, Andrews & Kurth, L.L.P., 1701 Pennsylvania Ave., N.W., Washington, D.C. 20006.

Final Judgment

Plaintiff, United States of America, filed its Complaint on January 12, 1995. Plaintiff and defendant, by their respective attorneys, have consented to the entry of this Final Judgment without trial or adjudication of any issue of fact or law. This Final Judgment shall not be evidence against or an admission by any party with respect to any issue of fact or law. Therefore, before the taking of any testimony and without trial or adjudication of any issue of fact or law herein, and upon consent of the parties, it is hereby

Ordered, adjudged, and decreed, as follows:

I

Jurisdiction

This Court has jurisdiction of the subject matter of this action and of each of the parties consenting hereto. The Complaint states a claim upon which relief may be granted against the defendant under Section 1 of the Sherman Act, 15 U.S.C. § 1.

II

Definitions

As used herein, the term:

(A) ''agreement'' means a contract, arrangement, or understanding, formal or informal, oral or written, between two or more persons;

(B) ''defendant'' means El Paso Natural Gas Company;

(C) ''document'' means all ''writings and recordings'' as that phrase is defined in Rule 1001(1) of the Federal Rules of Evidence;

(D) ''gathering'' means collecting natural gas from the point of entry into the gathering system and moving the gas to a point where it is introduced into mainline transmission facilities; for gas that is compressed, processed, or treated subsequent to receipt into the gathering system and prior to delivery into mainline transmission facilities, gathering also includes the act of compressing, processing, or treating, as applicable;

(E) ''gathering system'' means the facilities used by the defendant to perform gathering in the San Juan Basin;

(F) ''including'' means including but not limited to;

(G) ''inspection log'' means the log the defendant is required to create and maintain pursuant to Section VI(C) of this Final Judgment, setting forth the information recorded by the defendant pursuant to Section VI(C)(1)–(7);

(H) ''meter'' means those devices used to measure the volume of natural gas flowing into or through the gathering system;

(I) ''metering facilities'' means any of the equipment necessary to connect a meter to the gathering system and to measure the flow of gas from a well or wells into the gathering system, including the meter, the meter house, and the meter run;

(J) ''meter installation'' means the provision of service necessary to connect a well or wells to the gathering system, including construction and connection of metering facilities and the well-tie line;

(K) ''meter installation inspection'' means any inspection of metering facilities that is required before gas may enter the gathering system through those facilities;

(L) ''person'' means any natural person, corporation, firm, company, sole proprietorship, partnership, association, institution, governmental unit, or other legal entity;

(M) ''San Juan Basin'' means that area of northwestern New Mexico and southern Colorado in which defendant owns and operates a gathering system;

(N) ''tap'' means the interconnection between the well-tie line and the gathering system that requires a breach of the gathering pipeline wall, including the valve connecting the well-tie line with the gathering pipeline wall;

(O) ''uniform'' means reasonably consistent under the circumstances; but does not require that identical procedures must be applied to every situation. If procedures are not identical, uniformity requires that there exists a reasonable and lawful basis to explain any differences or changes in the procedures applied, or in the manner in which stated procedures are applied;

(P) ''well operator'' means any person with whom the defendant contracts, or would contract, for meter installation, or from whom the defendant receives an inquiry regarding connecting a well or wells to the gathering system;

(Q) ''well-tie line'' means the pipe connecting the metering facilities to the gathering system.

III

Applicability

(A) This Final Judgment applies to the defendant and to each of its successors, assigns, and to all other persons in active concert or participation with any of them who shall have received actual notice of the Final Judgment by personal service or otherwise.

(B) Nothing herein contained shall suggest that any portion of this Final Judgment is or has been created for the benefit of any third party and nothing herein shall be construed to provide any rights to any third party.

IV

Prohibited Conduct

The defendant is enjoined and restrained from:

(A) requiring a well operator to purchase metering facilities or meter installation from the defendant, or a third party under contract to the defendant, as a condition of connecting a well to the gathering system;

(B) requiring a well operator to purchase construction or installation of any pipeline that connects a well to the metering facilities from the defendant, or a third party under contract to the defendant, as a condition of connecting that well to the gathering system, or imposing upon a well operator any requirements for such construction and installation if the operator chooses to purchase such pipeline construction and installation from a person other than the defendant;

(C) requiring a well operator to pay any charge, other than one included in the gathering rate, for a metering facilities maintenance provided by the defendant or a third party under contract to the defendant;

(D) entering into an agreement with a well operator to provide meter installation, meter installation inspection, or installation of a tap without first disclosing to the operator that the well operator may have the meter installation provided by a person

other than the defendant, or a third party under contract to the defendant. This disclosure shall be made in the following manner:

(1) at the time of each initial contact between the defendant and a well operator concerning the provision of gathering which will require meter installation, the defendant shall expressly inform the well operator that the operator may choose to provide meter installation itself, subject to any specifications and inspections required by defendant consistent with Section V(A)–(D);

(2) at the time of the initiation of any discussion between the defendant and a well operator concerning the terms of any agreement that will require the well operator to bear any cost of meter installation, the defendant shall provide the well operator with the following materials arranged in the following order:

a. a copy of the Notice to El Paso Natural Gas Company Gathering Customers attached as Attachment A to this Final Judgment;

b. a statement that the defendant will, as soon as practicable, provide the well operator with the estimates described in Section V(D)(3);

c. A sample of the contract that the defendant uses when it provides meter installation for a well operator;

d. a sample of the contract that the defendant uses when the well operator provides all or part of the meter installation;

e. a copy of any specifications, standards and procedures that the defendant, consistent with the provisions of Section V(A)–(D), may require the well operator to follow when the operator performs the meter installation;

(3) as soon as practicable after the initiation of any discussion between the defendant and a well operator concerning the terms of any agreement that will require the well operator to bear any cost of meter installation, the defendant shall provide the well operator with:

a. a statement of the estimated total price that the defendant will charge the well operator if the defendant provides meter installation, and a detailed statement setting forth each of the services or materials, and costs for those services or materials, that comprise that total price;

b. a statement of the estimated total price that the defendant will charge the well operator for construction or inspection if the well operator chooses to provide for meter installation itself, and a detailed statement setting forth the services and materials, and costs for those services and materials, that comprise that total price;

(E) entering into an agreement with a well operator, pursuant to which the well operator will perform meter installation, and which includes any specifications, standards and procedures that the defendant has imposed pursuant to Section V(A)–(D), without including in the document memorializing that agreement:

(1) the following clause regarding access to inspection logs:

The well operator shall, upon reasonable notice, have access to any inspections logs maintained by El Paso Natural Gas Company that pertain to any meter installation covered by this contract, and, for comparison purposes, access to any inspection logs maintained by El Paso Natural Gas Company that relate to meter installation provided by El Paso Natural Gas Company.''; and

(2) the following clause, unless the well operator waives in writing its right to the inclusion of such clause:

In the event of a dispute related to the interpretation or performance of this agreement, each party shall designate an authorized agent to investigate, discuss and seek to settle the matter between them. If the two agents are unable to settle the matter within 10 days after notification of the designation, the matter shall be submitted to a senior officer of each party for consideration. If settlement cannot be reached through their efforts within an additional 20 days, or such longer time as they shall agree upon, the parties shall enter into a biding form of arbitration of their dispute, the costs of which shall be apportioned by the arbitrator.

V

Limiting Conditions

Nothing in this Final Judgment shall prohibit the defendant from:

(A) specifying the type of metering facilities a well operator must use when connecting a well or wells to the gathering system, provided that the specifications uniformly apply to all persons, including the defendant;

(B) specifying standards and procedures that must be followed for meter installation, provided that the standards and procedures uniformly apply to all persons performing such installations, including the defendant;

(C) requiring that meter installations provided by a well operator, or third parties under contract to the operator, be subject to inspection by the defendant to ensure compliance with any standards and procedures specified by the defendant, provided that:

(1) if the defendant requires any meter installation inspections, it does so for all meter installations, including those meter installations provided by the defendant;

(2) the inspection process the defendant uses is uniform for all meter installations, including those meter installations provided by the defendant. The defendant shall ensure that the persons conducting the inspections do not unreasonably withhold any necessary approvals, or impose any unreasonable compliance requirements;

(3) the defendant requires persons conducting the inspections to keep a contemporaneously written log for each inspection they conduct, including any inspections of metering facilities installed by the defendant;

(D) requiring a well operator to pay for any inspections the defendant requires, consistent with the provisions of Section V(C), provided that any charge the defendant requires for such inspections is reasonable, calculated on a uniform basis, and is uniformly applied to all meter installations, including those provided by the defendant;

(E) requiring a well operator to use only those persons designated by the defendant to install a tap, provided that the defendant either:

(1) charge the well operator no more than the actual cost of materials, equipment and labor, which labor charge shall include only wages, benefits and payroll taxes, incurred in installation when the defendant installs the tap, or

(2) include in any such designation at least three persons in the San Juan Basin, other than the defendant or any third party under any contractual relationship with the defendant, whom the operator can select to perform such installation;

(F) specifying to a well operator the location at which a well will be connected to the gathering system;

(G) requiring a well operator to convey to the defendant title to the metering facilities connecting a well to the gathering system that are installed at the operator's expense, as a condition of connecting that well to the system, provided that the defendant agrees at the time of any such required conveyance that title for those facilities will revert back to the operator upon abandonment or plugging of the well, or upon the operator's request that the defendant discontinue gathering gas from the well;

(H) requiring the well operator to agree to indemnify the defendant against any liability arising from the acts or omissions of the operator, or a third party under contract to the operator, which are related to meter installation performed by the operator or third party;

(I) requiring the well operator to provide defendant with a copy of all permits or other documents issued by, or filings required by, any authority to evidence the operator's compliance with local, state and federal laws and regulations applicable to meter installation;

(J) requiring the well operator to provide the defendant with copies of all right-of-way authorizations and permits;

(K) making reasonable changes to any specification, standard, or policy instituted with regard to meter installation;

(L) providing meter installation pursuant to the provisions of contracts between the defendant and well operators in effect prior to May 18, 1994.

VI

Compliance Program

(A) The defendant is ordered to maintain an antitrust compliance program which shall include designating, within 30 days of entry of this Final Judgment, an Antitrust Compliance Officer with responsibility for accomplishing the antitrust compliance program and with the purpose of achieving compliance with this Final Judgment. The Antitrust Compliance Officer shall, on a continuing basis, supervise the review of the current and proposed activities of the defendant to ensure that it complies with this final Judgment.

(B) The antitrust Compliance Officer shall be responsible for accomplishing the following activities:

(1) distributing, within 60 days from the entry of this Final Judgment, a copy of this Final Judgment to all officers and employees with responsibility for marketing of the defendant's gathering, or for approving and supervising the connection of a well to any of the defendant's gathering systems;

(2) distributing in a timely manner a copy of this Final Judgment to any officer or employee who succeeds to a position described in Section VI(B)(1);

(3) briefing annually those persons designated in Section VI(B)(1) on the meaning and requirements of this Final Judgment and the antitrust laws and advising them that the defendant's legal advisors are available to confer with them regarding compliance with the Final Judgment and the antitrust laws;

(4) obtaining from each officer or employee designated in Section VI(B)(1) an annual written certification that he or she: (a) has read, understands, and agrees to abide by the terms of this Final Judgment; and (b) has been advised and understands that his or her failure to comply with this Final Judgment may result in conviction for criminal contempt of court;

(5) maintaining a record of recipients to whom the Final Judgment has been distributed and from whom the certification in Section VI(B)(4) has been obtained;

(6) distributing, within 60 days from the entry of this Final Judgment, by first-class mail, postage paid, a copy of the Notice to El Paso Natural Gas Company Gathering Customers that is attached as Attachment A to this Final Judgment to all well operators that on the date of entry of this Final Judgment have contracts with defendant for gathering.

(C) Each time the defendant requires a meter installation inspection, the defendant shall create a written record setting forth at a minimum, the following information:

(1) the name of the well operator for whom the meter installation is being provided;

(2) the name of the person or persons providing the meter installation;

(3) the location of the well or wells associated with the meter installation that is the subject of the inspection;

(4) the date or dates of the inspection and the amount of time spent engaged in the actual inspection;

(5) the total price charged for the inspection and a detailed description of how the defendant arrived at that price;

(6) with respect to any materials or work assoicatied with the installation which the inspector rejects, a detailed explanation of why the inspector made the rejection;

(7) if the inspector rejects any materials used or work performed by the person performing the installation, a detailed description of the steps that the inspector informed that person he or she could take to pass the inspection. The defendant shall maintain in its Farmington, New Mexico office, a log containing the information recorded pursuant to this subsection for a period of two years, and shall, upon reasonable notice, make available to a well operator those portions of the log pertaining to that well operator and any portions of the log that pertain to meter installations provided by the defendant.

(D) At any time, if the defendant's Antitrust Compliance Officer learns of any past or future violations of Section IV of this Final Judgment, the defendant shall, within 45 days after such knowledge is obtained, take apporpriate action to terminate or modify the activity so as to comply with this Final Judgment.

VII

Certification

(A) Within 75 days after the entry of this Final Judgment, the defendant shall certify to the plaintiff whether it has designated an Antitrust Compliance Officer and has distributed the Final Judgment in accordance with Section VI above.

(B) For each year of the term of this Final Judgment, the defendant shall file with the plaintiff, on or before the anniversary date of entry of this Final Judgment, a statement as to the fact and manner of its compliance with the provisions of Section VI above.

VIII

Plaintiff Access

(A) To determine or secure compliance with this Final Judgment and for no other purpose, duly authorized representatives of the plaintiff shall, upon written request of the Assistant Attorney General in charge of the Antitrust Division, and on reasonable notice to the defendant made to its principal office, be permitted, subject to any legally recognized privilege:

(1) access during the defendant's office hours to inspect and copy, at the plaintiff's expense, all documents in the possession or under the control of the defendant, who may have counsel present, relating to any matters contained in this Final Judgment; and

(2) subject to the reasonable convenience of the defendant and without restraint or interference from it, to interview officers, employees or agents of the defendant, who may have counsel present, regarding such matters.

(B) Upon the written request of the Assistant Attorney General in charge of the Antitrust Division made to the defendant's principal office, the defendant shall submit such written reports, under oath if requested, relating to any matters contained in this Final Judgment as may be reasonably requested, subject to any legally recognized privilege.

(C) No information or documents obtained by the means provided in Section VIII shall be divulged by the plaintiff to any person other than a duly authorized representative of the Executive Branch of the United States, except in the course of legal proceedings to which the United States is a party, or for the purpose of securing compliance with this Final Judgment, or as otherwise required by law.

(D) If at the time information or documents are furnished by the defendant to plaintiff, the defendant represents and identifies in writing the

material in any such information or documents to which a claim of protection may be asserted under Rule 26(c)(7) of the Federal Rules of Civil Procedure, and the defendant marks each pertinent page of such material, ''Subject to claim of protection under Rule 26(c)(7) of the Federal Rules of Civil Procedure,'' then 10 days' notice shall be given by plaintiff to the defendant prior to divulging such material in any legal proceeding (other than a grand jury proceeding) to which the defendant is not a party.

IX

Further Elements of the Final Judgment

(A) This Final Judgment shall expire ten years from the date of entry.

(B) Jurisdiction is retained by this Court for the purpose of enabling any of the parties to this Final Judgment to apply to this Court at any time for further orders and directions as may be necessary or appropriate to carry out or construe this Final Judgment, to modify or terminate any of its provisions, to enforce compliance, and to punish violations of its provisions.

(C) Entry of this Final Judgment is in the public interest.

ENTERED:

UNITED STATES DISTRICT JUDGE

Notice To El Paso Natural Gas Gathering Customers

Any customer seeking to connect a well to El Paso Natural Gas Company's (EPNG) gathering systems has the legal right to choose to provide meter installation subject to the conditions listed below, rather than to have EPNG provide for installation. *See* United States v. El Paso Natural Gas Company, D.D.C., No. _____ (Dec. _____ 1994). Meter installation includes the construction and connection of metering facilities (including the meter, the meter house, and the meter run) and the well-tie line. If a customer chooses to perform its own meter installation, EPNG may:

1. Specify the type of metering facilities the customer must use when connecting a well or wells to the gathering system.

2. Specify standards and procedures that must be followed for meter installation. EPNG's standards and procedures will be applied uniformly to any persons providing such installations, including EPNG.

3. Require that all meter installation performed by customers be subject to inspection by EPNG to ensure compliance with any standards and procedures specified by EPNG. The inspection process will be uniform for all meter installations, including those meter installations EPNG provides. The EPNG inspectors will not unreasonably withhold any necessary approvals or impose any unreasonable compliance requirements. EPNG inspectors will keep a contemporaneously written log for all inspections they conduct, including any inspections of meter installations provided by EPNG.

4. Require the customer to pay a reasonable charge for any meter installation inspection that EPNG conducts pursuant to ¶ 3 above. Any such charge will be calculated on a uniform basis and uniformly applied to all meter installations, including those performed by EPNG.

In the United States District Court for the District of Columbia

United States of America, Plaintiff, v. *El Paso Natural Gas Company,* Defendant.
Case Number 1: 95CV00067
Judge: Harold H. Greene
Deck Type: Antitrust
Date Stamp: 01/12/95

Competitive Impact Statement

Pursuant to Section 2(b) of the Antitrust Procedures and Penalties Act, 15 U.S.C. § 16(b)–(h), the United States submits this Competitive Impact Statement relating to the proposed Final Judgment submitted for entry with the consent of defendant El Paso Natural Gas Company (''El Paso'') in this civil antitrust proceeding.

Nature and Purpose of the Proceeding

On January 12, 1995 the United States filed a civil antitrust Complaint alleging that El Paso had entered into a contract, combination or conspiracy in restraint of trade in violation of Section 1 of the Sherman Act, 15 U.S.C. § 1. The Complaint alleges that El Paso, which provides natural gas gathering services in the San Juan Basin area of New Mexico and Colorado, tied the installation of metering facilities to the provision of its gas gathering service.

On January 12, 1995 the United States and El Paso filed a Stipulation by which they consented to the entry of a proposed Final Judgment designed to prevent any recurrence of such tying activity in the future. Under the proposed Final Judgment, El Paso will be enjoined from conditioning the provision of gas gathering service upon the gathering customer also purchasing meter installation from El Paso. In addition, El Paso will be required affirmatively to inform its gathering customers that they have the option of using someone other than El Paso to provide installation of all or part of the metering facilities. The proposed Final Judgment allows El Paso to continue to provide meter installation, but only after a customer has been explicitly informed that it has the option of using someone other than El Paso to provide this service. The decree also contains provisions to ensure that El Paso does not disadvantage well operators who choose competing meter installation providers.

I

Events Giving Rise to the Alleged Violation

In order to market natural gas, it must be carried by pipeline from the point of production to the point of use. Without transportation away from the well, natural gas has virtually no value, and no means of transportation other than via pipeline is economical. To market gas, it is first ''gathered'' from wells through small diameter pipes. The gas is then fed from the gathering system into one or more interstate pipelines that carry the gas to local distribution systems which in turn deliver the gas to the end users (consumers). Thus, gathering is an essential step in getting natural gas to market. Because of scale economies and network efficiencies associated with pipelines, it is often uneconomical associated with pipelines, it is often uneconomical for a producer to be served by more than one pipeline system.

The San Juan Basin is a natural gas production area located in northwestern New Mexico and southern Colorado. El Paso's gas gathering system permeates the basin. Many of the producers that have wells connected to El Paso's San Juan gathering system have no alternative means of transportation. El Paso's San Juan gathering system is regulated by the Federal Energy Regulatory Commission (''FERC''). FERC regulations require El Paso to limit to a published tariff rate the amount that it may charge for gathering. The FERC does not regulate the rate that El Paso charges for meter installation associated with the provision of its gathering service.

El Paso provides gathering at a charge based upon the volume of gas transported. A meter is a device used to measure the volume of gas flowing from a well into the gathering system. Connecting a well to the gathering system involves laying pipe from the well-head to the gathering pipeline. At the same time, metering equipment is installed at the well-head or along the pipe leading to the gathering system. Connecting a well to the gathering system also includes placing a ''tap'', or break of the gathering pipeline wall at

the point of interconnection with the well-tie pipeline. ''Meter installation'' as used in the Complaint and this statement, refers to the construction and installation of metering equipment or facilities, as well as the construction and installation of the pipe used to connect the metering equipment to the gathering system. Installation of meters and associated pipe requires adherence to certain safety precautions due to the proximity of the meter installation construction to the existing gas gathering pipeline, as well as the need to minimize hazards associated with future operations involving a pipe which will carry natural gas.[1]

When a well operator is considering whether to drill a well in a production area, it must determine first whether the well will be profitable. In deciding whether to drill, the operator will consider many factors including the gathering charge, transportation fees and the amount of money it will have to pay initially for the construction of the facilities necessary to hook the well to the gathering system. In an older field such as the San Juan Basin where wells do not generally produce at high rates, meter installation costs can make the difference between whether or not a well is drilled, affecting whether additional natural gas sites are made available to meet consumer demand.

The Complaint alleges that El Paso forced customers (or ''well operators'') who needed to purchase El Paso's gathering service to purchase meter installation services from El Paso as well. The Complaint also alleges that when contacted, El Paso informs a potential gathering customer that El Paso will connect a well after the operator has agreed that El Paso will perform the meter installation associated with connecting that well to El Paso's system and has prepaid a flat fee for the installation. El Paso contracts out almost all of this construction work to other companies in the San Juan Basin and then charges the customer for the materials, El Paso labor, and ''overheads''. ''Overheads'' account for as much as one third of the total bill to the customer.

The speed with which a well can be connected to the gathering system is a significant factor in determining the potential profitability of that well. Once a well operator has agreed that El Paso will perform the meter installation, the well operator must rely on El Paso to schedule that installation. In many instances, El Paso has taken a significantly longer time to complete meter installation than it would have taken if the well operator had been able to use an alternative to El Paso.

Over the past three years, El Paso has permitted only three well operators, and then only reluctantly, to perform meter installation using their own contractors, and El Paso's permission in those three instances extended to only a limited number of well connections. Each of these operators concluded that they could perform the installation for substantially less cost than El Paso, even if they had to follow El Paso's specifications when doing so. These well operators were able to perform meter installation at each well for nearly one-half of the El Paso construction cost estimate, thereby saving from $5,000 to $7,000 per well on each of the 121 wells they connected. Since 1991, a total of 453 wells have been connected to El Paso's gathering system. However, El Paso predicts that a significantly larger number of wells, 2200 or more, will be connected to its gathering system over the next five years. If well operators are able to secure like savings, either from third party competitors or from El Paso responding to the new competitive environment, then well operators in the San Juan Basin will likely save from $11 to $15 million dollars over the next five year period. Depending upon the number of new wells connected over the ten year life of the proposed Final Judgment, savings could reach the tens of millions of dollars.

III

Explanation of the Proposed Final Judgment

The proposed Final Judgment is designed to prevent El Paso from tying the service of meter installation to the provision of gathering on its San Juan gathering system. The proposed Final Judgment explicitly prohibits such tying. Section IV(A) provides that El Paso may not condition the provision of gathering upon a well operator agreeing to purchase either the metering equipment or its installation from El Paso.

The proposed Final Judgment does not, however, prohibit El Paso from providing meter installation in the future. The proposed Final Judgment, therefore, contains a number of safeguards to ensure that in the future El Paso makes known to its gathering customers that they have the option of providing their own meter installation and gives its customers sufficient information to make a reasoned choice. To this end, at the time of any initial inquiry concerning gathering and connection to its gathering system, Section IV(D) of the proposed Final Judgment requires El Paso to fully disclose to the well operator that the operator has the option of having someone other than El Paso provide meter installation. Compliance with this section requires that El Paso provide the well operator with written notice that the customer has the right pursuant to this Final Judgment to choose a construction company other than El Paso; provide an estimate of all charges that El Paso will require from the well operator, both if the operator selects El Paso to do the installation and if it does not; provide the operator with sample copies of the contracts that El Paso will use if the operator chooses to have El Paso do the installation or selects to have someone other than El Paso do the meter installation; and, provide a copy of the specifications, standards, and procedures that El Paso will require the operator to follow if the operator performs the installation. With this information, the well operator will be able to make an informed choice as to whether to use El Paso or another contractor for meter installation.

The proposed Final Judgment recognizes that El Paso has a reasonable need to assure the safety and integrity of its gathering system, and may have some legitimate concerns regarding its liability when well operators perform meter installations for wells connecting to its gathering system. Pipe and equipment that connect to El Paso's gathering pipeline can pose safety hazards if they are constructed in a substandard manner or with faulty materials.

Section V(E) of the proposed Final Judgment permits El Paso to protect its safety and liability concerns consistent with the tying prohibition found in Section IV(A). Connection of the well-tie line requires a ''tap'' into the gathering pipeline—an actual opening into the pipe. Welding and other construction of lines carrying natural gas must be done in a manner that safeguards the workers and the pipe involved. For this reason, Section V(E) allows El Paso to require well operators to use El Paso or El Paso contractors for the tap, but limits the price that El Paso may charge for this service.

In recognition of El Paso's safety and liability concerns, Sections V(A)–(B) permit El Paso to specify to well operators reasonable specifications for the construction and installation of metering facilities. At the same time, these sections also set forth conditions

[1] Installation may require compliance with standards developed by the United States Department of Transportation Office of Pipeline Safety Standards, the American National Standards Institute, the American Petroleum Institute, the American Society of Mechanical Engineers and the American Society of Testing and Materials.

that limit El Paso's discretion regarding the type of standards and procedures El Paso may require and the manner in which it implements these standards and procedures. These limiting conditions will ensure that El Paso will not use its standard setting practices to discourage its gathering customers from using other contractors for meter installation in the future. Thus, specifications that have the effect of steering well operators to use of El Paso or El Paso-provided equipment for meter installation would violate this Final Judgment.

Similarly, El Paso has a bonafide interest in providing maintenance for meter equipment connected to its system because such maintenance is necessary to assure continuing provision of safe and efficient gas gathering. For this reason, Section IV(C) of the proposed Final Judgment allows El Paso to provide maintenance and to recover the cost for such maintenance, but only in the rate for gathering charged all gathering customers.

Well operators generally connect new wells again and again over the years. The proposed Final Judgment prevents El Paso from implementing practices designed, or having the effect when implemented, to discourage well operators who elect to perform their own meter installation from exercising that option again. Thus, although Section V permits El Paso to set standards and procedures that a well operator must follow when installing meters connected to El Paso gathering system, and to require well operators to submit their installations to inspection by El Paso, it places certain restrictions on El Paso to assure that its specifications, procedures and inspections do not impose undue cost or delay.

As a means of monitoring El Paso's conduct with respect to the requirements it imposes, Section V(C) of the proposed Final Judgment provides that if El Paso does require meter installation inspections, its inspectors must create logs of their inspections of both El Paso and non-El Paso installations. El Paso must maintain these logs and made them available to well operators that choose to perform their own meter installation. To assure well operators timely access to these logs, the proposed Final Judgment (Section IV(E)) requires that any contract between a well operator and El Paso that provides for meter installation inspections must also contain a clause giving the well operator access to inspections records. These well operators will then be able to examine logs for their installation jobs and compare logs pertaining to meter installations performed by El Paso to aid in determining whether El Paso is conducting uniform and reasonable inspections.

Finally, the Final Judgment (Section IV(E)) requires that El Paso must give the well operator the unconditional option of including a clause in the meter installation contract that would permit the well operator to elect binding arbitration rather than court litigation to resolve differences under the contract.

The United States is satisfied that the proposed Final Judgment sufficiently resolves the antitrust violations alleged in the Complaint. The provisions of the proposed Final Judgment should prevent any future tying activities, and will allow El Paso to safeguard the integrity and safety of its own gathering system while at the same time assuring that those operators who choose to perform their own meter installation are not indirectly burdened by El Paso for their choice. Compliance with the proposed Final Judgment would prevent any recurrence of the violations alleged in the Complaint, and thus provides complete relief.

IV

Remedies Available to Potential Private Litigants

Section 4 of the Clayton Act, 15 U.S.C. § 15, provides that any person who has been injured in his business or property as a result of conduct forbidden by the antitrust laws may bring suit in Federal court to recover three times the damages suffered, as well as costs and reasonable attorneys fees. Entry of the proposed Final Judgment will neither impair nor assist the brining of any private antitrust damage action. Under the provisions of Section 5(a) of the Clayton Act, 15 U.S.C. § 16(a), the proposed Final Judgment has no *prima facie* effect in any subsequent private lawsuit that may be brought.

V

Procedure Available for Modification of the Proposed Final Judgment

The United States and defendant have stipulated that the proposed Final Judgment may be entered by the Court after compliance with the provisions of the APPA, provided that the United States has not withdrawn its consent. The APPA conditions entry upon the Court's determination that the proposed Final Judgment is in the public interest.

The APPA provides a period of at least 60 days preceding the effective date of the proposed Final Judgment within which any person may submit to the United States written comments regarding the proposed Final Judgment. Any person who wishes to comment should do so within 60 days of the date of publication of this Competitive Impact Statement in the **Federal Register**. The United States will evaluate the comments, determine whether it should withdraw its consent, and respond to comments. The comments and the response of the United States will be filed with the Court and published in the **Federal Register**.

Written comments should be submitted to: Roger W. Fones, Chief, Transportation, Energy, and Agriculture Section, Antitrust Division, Judiciary Center Building, 555 4th Street, N.W., Rm 9104, Washington, D.C. 20001.

VI

Alternative to the Proposed Final Judgment

The alternative to the proposed Final Judgment would be a full trial of the case against El Paso. In the view of the Department of Justice, such a trial would involve substantial cost to the United States and is not warranted because the proposed Final Judgment provides relief that will remedy the violations of the Sherman Act alleged in the United States' Complaint.

VII

Determinative Materials and Documents

There are no materials or documents that the United States considered to be determinative in formulating this proposed Final Judgment. Accordingly, none are being filed with this Competitive Impact Statement.

Dated: January 12, 1995.

Respectfully submitted.

Anne K. Bingaman,

Assistant Attorney General Antitrust Division.

Jade Alice Eaton,

Attorney, U.S. Department of Justice, Antitrust Division, Transportation, Energy, and Agriculture Section, Judiciary Center Building, 555 Fourth Street, N.W., Washington, DC 20001. (202) 307–6316.

Certificate of Service

I hereby certify that I have caused a copy of the foregoing COMPLAINT, STIPULATION, proposed FINAL JUDGMENT, and COMPETITIVE IMPACT STATEMENT to be served upon counsel in this matter in the manner set forth below:

By hand: Mary Anne Mason, Andrews & Kurth, L.L.P., 1701 Pennsylvania Avenue, N.W., Washington, D.C. 20006.

Dated: January 12, 1995.

Jill A. Ptacek,

Antitrust Division, U.S. Department of Justice, 555 4th Street, N.W., Washington, D.C. 20001, (202) 307–6607.

[FR Doc. 95–1989 Filed 1–25–95; 8:45 am]

BILLING CODE 4410–01–M

NATIONAL AERONAUTICS AND SPACE ADMINISTRATION

[Notice (95–008]

Aerospace Safety Advisory Panel; Meeting

AGENCY: National Aeronautics and Space Administration.

ACTION: Notice of meeting.

SUMMARY: In accordance with the Federal Advisory Committee Act, Pub. L. 92–463, as amended, the National Aeronautics and Space Administration announces a forthcoming meeting of the Aerospace Safety Advisory Panel.

DATES: March 23, 1995, 2:00 p.m. to 3:30 p.m.

ADDRESSES: National Aeronautics and Space Administration, 300 E Street, SW, Room 9H40, Washington, DC 20546.

FOR FURTHER INFORMATION CONTACT: Mr. Frank L. Manning, Code Q–1, National Aeronautics and Space Administration, Washington, DC 20546 (202/358–0914).

SUPPLEMENTARY INFORMATION: The Aerospace Safety Advisory Panel will present its annual report to the NASA Administrator. This is pursuant to carrying out its statutory duties for which the Panel reviews, identifies, evaluates, and advises on those program activities, systems, procedures, and management activities that can contribute to program risk. Priority is given to those programs that involve the safety of manned flight. The major subjects covered will be the Space Shuttle, Space Station, and Aeronautical Operations. The Aerospace Safety Advisory Panel is chaired by Norman R. Parmet and is composed of 8 members and 6 consultants. The meeting will be open to the public up to the capacity of the room (approximately 50 persons including members of the Panel).

Type of Meeting: Open

Agenda:

Thursday, March 23

2:00 p.m.—Presentation of the findings and recommendations of the Aerospace Safety Advisory Panel

3:30—Adjourn

All attendees will be requested to sign an attendance register.

Dated: January 20, 1995.

Timothy M. Sullivan,

Advisory Committee Management Officer, National Aeronautics and Space Administration.

[FR Doc. 95–2008 Filed 1–25–95; 8:45 am]

BILLING CODE 7510–01–M

NATIONAL SCIENCE FOUNDATION

Special Emphasis Panel in Design, Manufacture, and Industrial Innovation; Notice of Meeting

In accordance with the Federal Advisory Committee Act (Pub. L. 92–463, as amended), the National Science Foundation announces the following meeting:

Name: Special Emphasis Panel in Design, Manufacture, and Industrial Innovation (#1194).

Date and Time: February 16, 1995; 8:30 a.m.–5:00 p.m.

Location: Room 730, National Science Foundation, 4201 Wilson Blvd., Arlington, VA.

Type of Meeting: Closed.

Contact Person: Dr. Warren DeVries, Program Director, DMII, Room 525, NSF, 4201 Wilson Blvd., Arlington, VA. 22230, (703) 306–1330.

Purpose of Meeting: To provide advice and recommendations concerning proposals submitted to NSF for financial support.

Agenda: To review and evaluate applications for the Presidential Faculty Fellows Program.

Reason for Closing: The proposals being reviewed include information of a proprietary or confidential nature, including technical information; financial data, such as salaries; and personal information concerning individuals associated with the proposals. These matters are exempt under 5 U.S.C. 552b(c), (4) and (6) of the Government in the Sunshine Act.

Dated: January 23, 1995.

M. Rebecca Winkler,

Committee Management Officer.

[FR Doc. 95–1963 Filed 1–25–95; 8:45 am]

BILLING CODE 7555–01–M

Special Emphasis Panel in Electrical and Communications Systems; Notice of Meeting

In accordance with the Federal Advisory Committee Act (Pub. L. 92–463, as amended), the National Science Foundation announces the following meeting:

Name: Special Emphasis Panel in Electrical and Communications Systems.

Date and Time: February 14, 1995/8:30 am–5:00 pm.

Place: National Science Foundation, 4201 Wilson Boulevard, Room 530 & 580, Arlington, Virginia 22230.

Contact Person: Dr. Deborah Crawford, Program Director, Solid State and Microstructures, Division of Electrical and Communications Systems, Room 675, National Science Foundation, 4201 Wilson Blvd., Arlington, VA 22230.

Telephone: (703) 306–1339.

Type of Meeting: Closed.

Purpose of Meeting: To provide advice and recommendations concerning proposals submitted to NSF for financial support.

Agenda: To review and evaluate applications of regular research proposals as part of the selection process for awards.

Reason for Closing: The proposals being reviewed include information of a proprietary confidential nature, including technical information; financial data, such as salaries; and personal information concerning individuals associated with the proposals. These matters are exempt under 5 U.S.C. 552b(c) (4) and (6) of the Government Sunshine Act.

Dated: January 23, 1995.

M. Rebecca Winkler,

Committee Management Officer.

[FR Doc. 95–1964 Filed 1–25–95; 8:45 am]

BILLING CODE 7555–01–M

Special Emphasis Panel In Bioengineering and Environmental Systems; Notice of Meeting

In accordance with the Federal Advisory Committee Act (Pub. L. 92–463, as amended), the National Science Foundation announces the following meeting.

Name: Special Emphasis Panel in Bioengineering and Environmental Systems (No. 1189).

Date and Time: February 13, 1995; 9:00 am—4:00 pm.

Place: National Science Foundation, 4201 Wilson Boulevard, Room 565, Arlington, VA 22230.

Type of Meeting: Closed.

Contact Person: Edward H. Bryan, Program Director, Environmental Engineering, Division of Bioengineering and Environmental Systems, National Science Foundation, 4201 Wilson Boulevard, Arlington, VA 22230, Telephone: (703) 306–1318.

Purpose of Meeting: To provide advice and recommendations concerning proposals submitted to NSF for financial support.

Agenda: To review and evaluate proposals as part of the selection process for awards.

Reason for Closing: The proposals being reviewed include information of a proprietary or confidential nature, including technical information; financial data, such as salaries; and personal information concerning individuals associated with the proposals. These matters are exempt under 5 U.S.C. 552b(c), (4) and (6) of the Government in the Sunshine Act.

Dated: January 23, 1995.

M. Rebecca Winkler,

Committee Management Officer.

[FR Doc. 95–1966 Filed 1–25–95; 8:45 am]

BILLING CODE 7555–01–M

Special Emphasis Panel in Physics, Notice of Meeting

In accordance with the Federal Advisory Committee Act (Pub. L. 92–463, as amended), the National Science Foundation announces the following meeting.

Name: Special Emphasis Panel in Physics (1208).

Date and Time: Tuesday, February 14, 1995; 8:30 a.m.–5:00 p.m.

Place: Room 1020, 4201 Wilson Blvd., Arlington, VA 22230.

Type of Meeting: Closed.

Contact Person: Dr. Thomas McIlrath, Program Director for Atomic, Molecular and Optical Physics, Division of Physics, Room 1015, National Science Foundation, 4201 Wilson Blvd., Arlington, VA 22230. Telephone: (703) 306–1807.

Purpose of Meeting: To provide advice and recommendations concerning proposals submitted to NSF for financial support.

Agenda: To review and evaluate Atomic, Molecular and Optical Physics Career proposals as part of the selection process for awards.

Reason for Closing: The proposals being reviewed include information of a proprietary or confidential nature, including technical information; financial data, such as salaries; and personal information concerning individuals associated with the proposals. These matters are exempt under 5 U.S.C. 552b(c), (4) and (6) of the Government in the Sunshine Act.

Dated: January 23, 1995.

M. Rebecca Winkler,

Committee Management Officer.

[FR Doc. 95–1967 Filed 1–25–95; 8:45 am]

BILLING CODE 7555–01–M

Committee of Visitors of the Advisory Committee for Computer and Information Science and Engineering; Notice of Meeting

In accordance with the Federal Advisory Committee Act (Pub. L. 92–463, as amended), the National Science Foundation announces the following meeting.

Name: Committee of Visitors.

Date and Time: February 13, 1995 8:30 a.m.–5 p.m.

Place: Room 310, 4201 Wilson Blvd., Arlington, VA 22230.

Type of Meeting: Closed.

Contact Person: Dr. John R. Lehmann, Deputy Division Director, Microelectronic Information Processing Systems Division, Rm 1155, National Science Foundation, 4201 Wilson Blvd., Arlington, VA 22230, Telephone: (703) 306–1940.

Purpose of Meeting: To carry out Committee of Visitors (COV) review, including examination of decisions on proposals, reviewer comments, and other privileged materials.

Agenda: To provide oversight review of the Design, Tools & Test Program.

Reason for Closing: The meeting is closed to the public because the Committee is reviewing proposal actions that will include privileged intellectual property and personal information that could harm individuals if they were disclosed. If discussions were open to the public, these matters that are exempt under 5 U.S.C. 552b(c) (4) and (6) of the Government in the Sunshine Act would be improperly disclosed.

Dated: January 23, 1995.

M. Rebecca Winkler,

Committee Management Officer.

[FR Doc. 95–1968 Filed 1–25–95; 8:45 am]

BILLING CODE 7555–01–M

Special Emphasis Panel in Chemistry; Notice of Meeting

In accordance with the Federal Advisory Committee Act (Pub. L. 92–463, as amended), the National Science Foundation announces the following meeting:

Name and Committee Code: Special Emphasis Panel in Chemistry (#1191).

Date and Time: February 16–17, 1995, 8 a.m. to 5 p.m.

Place: Rooms 375, 360, 360.2, 365, 370, 310, 310.2, NSF, 4201 Wilson Boulevard, Arlington, VA 22230.

Type of Meeting: Closed.

Contact Person: Dr. Karolyn Eisenstein, Program Director, Office of Special Projects, Chemistry Division, Room 1055, National Science Foundation, 4201 Wilson Boulevard, Arlington, VA 22230, Telephone: (703) 306–1850.

Purpose of Meeting: To provide advice and recommendations concerning applications submitted to NSF for financial support.

Agenda: To review and evaluate applications for Postdoctoral Fellowships in Chemistry.

Reason for Closing: The proposals being reviewed include information of a proprietary or confidential nature, including technical information; and personal information concerning individuals associated with the applications. These matters are exempt under 5 U.S.C. 552 b(c) (4) and (6) of the Government in the Sunshine Act.

Dated: January 23, 1995.

M. Rebecca Winkler,

Committee Management Officer.

[FR Doc. 95–1969 Filed 1–25–95; 8:45 am]

BILLING CODE 7555–01–M

Special Emphasis Panel in Human Resource Development; Notice of Meeting

In accordance with the Federal Advisory Committee Act (Pub. L. 92–463, as amended), the National Science Foundation announces the following meeting.

Name and Committee Code: Special Emphasis Panel in Human Resource Development #1199.

Date and Time: February 13 & 14, 1995—8:00 am–5:00 pm

Place: National Science Foundation, 4201 Wilson Blvd., Arlington, VA. Rooms: 3751 & 330.

Type of Meeting: Closed.

Contact Person: Betty Jones & Costello Brown, National Science Foundation, 4201 Wilson Blvd., Arlington, VA 22230. Telephone: (703) 306–1640.

Purpose of Meeting: To provide advice and recommendations concerning proposals submitted to NSF for financial support.

Agenda: To review and evaluate Comprehensive Partnerships for Minority Student Achievement (CPMSA) proposal as part of the selection process for awards.

Reason for Closing: The proposals being reviewed include information of a proprietary or confidential nature, including technical information; financial data, such as salaries; and personal information concerning individuals associated with the proposals. These matters are exempt under 5 USC 552b(c), (4) and (6) of the Government in the Sunshine Act.

Dated: January 23, 1995.

M. Rebecca Winkler,

Committee Management Officer.

[FR Doc. 95–1970 Filed 1–25–95; 8:45 am]

BILLING CODE 7555–01–M

Advisory Committee for Engineering; Notice of Meeting

In accordance with the Federal Advisory Committee Act (Pub. L. 92–463, as amended), the National Science Foundation announces the following meeting.

Name: Advisory Committee for Engineering—(#1170).

Date and Time: February 15–16, 1995—8:30 a.m. to 5:00 p.m.

Place: Room 580, National Science Foundation, 4201 Wilson Boulevard, Arlington, VA 22230.

Type of Meeting: Closed.

Contact Person: Dr. Warren DeVries, and Dr. Kesh Narayanan, Program Directors, Manufacturing Processes and Equipment, National Science Foundation, 4201 Wilson Boulevard, Arlington, VA 22230, telephone, (703) 306–1330.

Purpose of Meeting: Committee of Visitors (COV) review, including examination of decisions on proposals, reviewer comments, and other privileged materials.

Reason for Closing: The meeting is closed to the public because the Committee is reviewing proposal actions that will include privileged intellectual property and personal information that could harm individuals if they were disclosed. If discussions were open to the public, these matters that are exempt under 5 U.S.C. 552b(c) (4) and (6) of the Government in the Sunshine Act, would be improperly disclosed.

Dated: January 23, 1995.

M. Rebecca Winkler,

Committee Management Officer.

[FR Doc. 95–1965 Filed 1–25–95; 8:45 am]

BILLING CODE 7555–01–M

Special Emphasis Panel in Human Resource Development; Notice of Meeting

In accordance with the Federal Advisory Committee Act (Pub. L. 92–463, as amended) the National Science Foundation announces the following meeting.

Name and Committee Code: Special Emphasis Panel Resource Development #1199.

Date and Time: February 15, 16 and 17, 1995—8:00 am–5:00 pm.

Place: National Science Foundation, 4201 Wilson Blvd., Arlington, VA. Rooms: 310, 320, 330, 340, 370, 380, 390.

Type of Meeting: Closed.

Contact Person: Betty Jones and Costello Brown, National Science Foundation, 4201 Wilson Boulevard, Arlington, VA 22230. Telephone: (703) 306–1640.

Purpose of Meeting: To provide advice and recommendations concerning proposals submitted to NSF for financial support.

Agenda: To review and evaluate Summer Science Camps (SSC) proposals as part of the selection process for awards.

Reason for Closing: The proposals being reviewed include information of a proprietary or confidential nature, including technical information; financial data, such as salaries; and personal information concerning individuals associated with the proposals. These matters are exempt under 5 USC 552b(c), (4) and (6) of the Government in the Sunshine Act.

Dated: January 23, 1995.

M. Rebecca Winkler,

Committee Management Officer.

[FR Doc. 95–1971 Filed 1–25–95; 8:45 am]

BILLING CODE 7555–01–M

Special Emphasis Panel in Physics; Notice of Meeting

In accordance with the Federal Advisory Committee Act (Pub. L. 92–463, as amended), the National Science Foundation announces the following meeting:

Name: Special Emphasis Panel in Physics (1208).

Date and Time: Monday, February 13, 1995; 8:30 a.m.–5:00 p.m.

Place: Room 1060, 4201 Wilson Blvd., Arlington, VA 22230.

Type of Meeting: Closed.

Contact Person: Dr. John Lightbody, Program Director for Nuclear Physics, Division of Physics, Room 1015, National Science Foundation, 4201 Wilson Blvd., Arlington, VA 22230. Telephone: (703) 306–1806.

Purpose of Meeting: To provide advice and recommendations concerning proposals submitted to NSF for financial support.

Agenda: To review and evaluate Nuclear Physics Career proposals as part of the selection process for awards.

Reason for Closing: The proposals being reviewed include information of a proprietary or confidential nature, including technical information; financial data, such as salaries; and personal information concerning individuals associated with the proposals. These matters are exempt under 5 U.S.C. 552b(c), (4) and (6) of the Government in the Sunshine Act.

Dated: January 23, 1995.

John F. Wilkinson, Jr.,

Director, HRM.

[FR Doc. 95–1972 Filed 1–25–95; 8:45 am]

BILLING CODE 7555–01–M

NUCLEAR REGULATORY COMMISSION

[Docket No. 50–131]

Omaha Veterans Administration Medical Center; Consideration of Application for Renewal of Facility License

The United States Nuclear Regulatory Commission (the Commission) is considering renewal of Facility License No. R–57, issued to the Omaha Veterans Administration Medical Center (VA or the licensee) for operation of the VA TRIGA Research Reactor located in the Omaha Veterans Administration Medical Center in the city of Omaha, Douglas County, Nebraska.

The renewal would extend the expiration date of Facility License No. R–57 for 20 years from date of issuance, in accordance with the licensee's timely application for renewal dated May 10, 1993.

Prior to a decision to renew the license, the Commission will have made findings required by the Atomic Energy Act of 1954, as amended (the Act), and the Commission's regulations.

Within 30 days of publication of this notice, the licensee may file a request for a hearing with respect to renewal of the subject facility license and any person whose interest may be affected by this proceeding and who wishes to participate as a party in the proceeding must file a written request for a hearing and a petition for leave to intervene. Requests for a hearing and a petition for leave to intervene shall be filed in accordance with the Commission's ''Rules of Practice for Domestic Licensing Proceedings'' in 10 CFR Part 2. Interested persons should consult a current copy of 10 CFR 2.714 which is available at the Commission's Public Document Room, the Gelman Building, 2120 L Street, NW., Washington, DC 20037. If a request for a hearing or petition for leave to intervene is filed within the time prescribed above, the Commission or an Atomic Safety and Licensing Board, designated by the Commission or by the Chairman of the Atomic Safety and Licensing Board Panel, will rule on the request and/or petition and the Secretary or the designated Atomic Safety and Licensing Board will issue a notice of hearing or an appropriate order.

As required by 10 CFR 2.714, a petition for leave to intervene shall set forth with particularity the interest of the petitioner in the proceeding, and how that interest may be affected by the results of the proceeding. The petition should specifically explain the reasons why intervention should be permitted with particular reference to the following factors: (1) The nature of the petitioner's right under the Act to be made a party to the proceeding; (2) the nature and extent of the petitioner's property, financial, or other interest in the proceeding; and (3) the possible effect of any order which may be entered in the proceeding on the petitioner's interest. The petition should also identify the specific aspect(s) of the subject matter of the proceeding as to which petitioner wishes to intervene. Any person who has filed a petition for leave to intervene or who has been admitted as a party may amend the petition without requesting leave of the Board up to fifteen (15) days prior to the first prehearing conference scheduled in the proceeding, but such as amended petition must satisfy the specificity requirements described above.

Not later than fifteen (15) days prior to the first prehearing conference scheduled in the proceeding, a petitioner shall file a supplement to the petition to intervene which must include a list of the contentions which are sought to be litigated in the matter. Each contention must consist of a specific statement of the issue of law or fact to be raised or controverted. In addition, the petitioner shall provide a brief explanation of the bases of the contention and a concise statement of the alleged facts or expert opinion which support the contention and on which the petitioner intends to rely in proving the contention at the hearing. The petitioner must also provide references to those specific sources and documents of which the petitioner is aware and on which the petitioner intends to rely to establish those facts or expert opinion and the petitioner must provide sufficient information to show that a genuine dispute exists with the

applicant on a material issue of law or fact. Contentions shall be limited to matters within the scope of the amendment under consideration. The contention must be one which, if proven, would entitle the petitioner to relief. A petitioner who fails to file such a supplement which satisfies these requirements with respect to at least one contention will not be permitted to participate as a party.

Those permitted to intervene become parties to the proceeding, subject to any limitations in the order granting leave to intervene, and have the opportunity to participate fully in the conduct of the hearing, including the opportunity to present evidence and cross-examine witnesses.

A request for a hearing or a petition for leave to intervene must be filed with Secretary of the Commission, U.S. Nuclear Regulatory Commission, Washington, D.C. 20555, Attention: Docketing and Services Branch, or may be delivered to the Commission's Public Document Room, the Gelman Building, 2120 L Street, NW, Washington, D.C. within the time prescribed above. Where petitions are filed during the last ten (10) days of the notice period, it is requested that the petitioner promptly so inform the Commission by a toll-free telephone call to Western Union at 1–(800) 325–600 [in Missouri 1–(800) 342–6700]. The Western Union operator should be given Datagram Identification Number 3737 and the following message addressed to Seymour H. Weiss: petitioner's name and telephone number; date petition was mailed; Omaha Veterans Administration Medical Center; and publication date and page number of this **Federal Register** notice. A copy of the petition should also be sent to the Office of the General Counsel, U.S. Nuclear Regulatory Commission, Washington, D.C. 20555, and to Mr. Paul L. Pullum, District Council Attorney, Mail Stop 02, Veterans Administration Medical Center, 4101 Woolworth Avenue, Omaha, Nebraska 68105, attorney for the licensee,

Nontimely filings of petitions of leave to intervene, amended petitions, supplemental petitions and/or requests for hearing will not be entertained absent a determination by the Commission, the presiding officer or the presiding Atomic Safety and Licensing Board that the petition and/or request should be granted based upon a balancing of factors specified in 10 CFR 2.714(a)(1)(i)–(v) and 2.714(d).

For further details with respect to this action, see the application for renewal dated May 10, 1993, which is available for public inspection at the Commission's Public Document Room at 2120 L Street, NW, Washington, D.C. 20555.

Dated at Rockville, Maryland, this 20th day of January, 1995.

For the Nuclear Regulatory Commission.

Singh S. Bajwa,

Acting Director, Non-Power Reactors and Decommissioning Project Directorate, Division of Project Support, Office of Nuclear Reactor Regulation.

[FR Doc. 95–1958 Filed 1–25–95; 8:45 am]

BILLING CODE 7590–01–M

In the Matter of All Reactor Licensees With Installed Thermo-Lag 330–1 Fire Barrier Material Receipt of Petition for Director's Decision Under 10 CFR 2.206

Notice is hereby given that by postcard dated November 14, 1994, Mr. Bob DeBolt requests that the U.S. Nuclear Regulatory Commission (NRC) take action with regard to the use of Thermo-Lag by all reactor licensees.

The Petitioner requests shutdown of all reactors in which Thermo-Lag is used until it has been removed and replaced. As the basis for this request, the Petitioner states that Thermo-Lag fails to meet NRC regulations concerning combustibility and that the manufacturer of Thermo-Lag was indicted for defrauding the Government and the utilities.

The Petition is being treated pursuant to 10 CFR 2.206 of the Commission's regulations and has been referred to the Director of the Office of Nuclear Reactor Regulation. As provided by 10 CFR 2.206, appropriate action will be taken on this Petition within a reasonable time. By letter dated January 19, 1995, the Director denied the request for immediate suspension of the operating licenses of all reactors in which Thermo-Lag is used.

A copy of the Petition and the Director's letter are available for inspection at the Commission's Public Document Room at 2120 L Street, NW, Washington, DC.

Dated at Rockville, Maryland, this 19th day of January 1995.

For the Nuclear Regulatory Commission.

Dennis M. Crutchfield,

Acting Director, Office of Nuclear Reactor Regulation.

[FR Doc. 95–1959 Filed 1–25–95; 8:45 am]

BILLING CODE 7590–01–M

SECURITIES AND EXCHANGE COMMISSION

Under Review by Office of Management and Budget

Acting Agency Clearance Officer: David T. Copenhafer, (202) 942–8800

Upon written request copy available form: Securities and Exchange Commission, Office of Filings and Information Services, Washington, D.C. 20549

Extension

Industry Guides; File No. 270–69

Notice is hereby given pursuant to the Paperwork Reduction Act of 1980 (44 U.S.C. 3501 *et seq.*), that the Securities and Exchange Commission (''Commission'') has requested extension of the Industry Guides.

The industry guides are used by registrants in certain specified industries as disclosure guidelines in preparing Securities Act and Exchange Act registration statements as well as other Exchange Act filings. The Commission estimates for administrative purposes that the total annual burden with respect to the guides is one hour.

General comments regarding the estimated burden hours should be directed to the Clearance Officer of the Securities and Exchange Commission at the address below. Any comments concerning the accuracy of the estimated average burden hours for compliance with Commission rules and forms should be directed to David T. Copenhafer, Acting Director, Office of Information Technology, Securities and Exchange Commission, 450 Fifth Street, N.W., Washington, D.C. 20549 and Clearance Officer for the Securities and Exchange Commission, Office of Management and Budget, (Project No. 3235–0069), Room 3208, New Executive Office Building, Washington, D.C. 20503.

Dated: January 11, 1995.

Margaret H. McFarland,

Deputy Secretary.

[FR Doc. 95–1916 Filed 1–25–95; 8:45 am]

BILLING CODE 8010–01–M

Issuer Delisting; Notice of Application To Withdraw From Listing and Registration; (Spartech Corporation, Common Stock, $0.75 Par Value, 9% Debentures, due April 15, 1999) File No. 1–5911

January 19, 1995.

Spartech Corporation (''Company'') has filed an application with the Securities and Exchange Commission

(''Commission''), pursuant to Section 12(d) of the Securities Exchange Act of 1934 (''Act'') and Rule 12d2–2(d) promulgated thereunder, to withdraw the above specified securities (''Securities'') from listing and registration on the American Stock Exchange, Inc. (''Amex'').

The reasons alleged in the application for withdrawing these Securities from listing and registration include the following:

According to the Company, in addition to being listed on the Amex, the Securities are listed on the New York Stock Exchange, Inc. (''NYSE''). The Securities commenced trading on the NYSE at the opening of business on December 7, 1994 and concurrently therewith the Security was suspended from trading on the Amex.

In making the decision to withdraw the Securities from listing on the Amex, the Company considered the direct and indirect costs and expenses attendant in maintaining the dual listing of the Securities on the NYSE and the Amex. The Company does not see any particular advantage in the dual trading of the Securities and believes that dual listing would fragment the market for the Security.

Any interested person may, on or before February 9, 1995, submit by letter to the Secretary of the Securities and Exchange Commission, 450 Fifth Street, N.W., Washington, D.C. 20549, facts bearing upon whether the application has been made in accordance with the rules of the Amex and what terms, if any, should be imposed by the Commission for the protection of investors. The Commission, based on the information submitted to it, will issue an order granting the application after the date mentioned above, unless the Commission determines to order a hearing on the matter.

For the Commission, by the Division of Market Regulation, pursuant to delegated authority.

Margaret H. McFarland,

Deputy Secretary.

[FR Doc. 95–1918 Filed 1–25–95; 8:45 am]

BILLING CODE 8010–01–M

Issuer Delisting; Notice of Application To Withdraw From Listing and Registration; (Diagnostic Health Services, Inc., Common Stock, $.01 Par Value, Common Stock Purchase Warrants) File No. 1–11984

January 19, 1995.

Diagnostic Health Services, Inc. (''Company'') has filed an application with the Securities and Exchange Commission (''Commission''), pursuant to Section 12(d) of the Securities Exchange Act of 1934 (''Act'') and Rule 12d2–2(d) promulgated thereunder, to withdraw the above specified securities (''Securities'') from listing and registration on the Boston Stock Exchange, Inc. (''BSE'').

The reasons alleged in the application for withdrawing these Securities from listing and registration include the following:

Presently, the Company has listed the Securities on the Exchange and on the NASDAQ Small Cap Market. The Company wishes to have the Securities delisted from the Exchange due to the fact the Securities have not been actively traded on the Exchange at any time since the inception of their listing, and the continued listing of the Securities on the Exchange will constitute an unnecessary expenditure of the Company's capital.

Any interested person may, on or before February 9, 1995, submit by letter to the Secretary of the Securities and Exchange Commission, 450 Fifth Street, NW., Washington, DC 20549, facts bearing upon whether the application has been made in accordance with the rules of the BSE and what terms, if any, should be imposed by the Commission for the protection of investors. The Commission, based on the information submitted to it, will issue an order granting the application after the date mentioned above, unless the Commission determines to order a hearing on the matter.

For the Commission, by the Division of Market Regulation, pursuant to delegated authority.

Margaret H. McFarland,

Deputy Secretary.

[FR Doc. 95–1917 Filed 1–25–95; 8:45 am]

BILLING CODE 8010–01–M

Issuer Delisting; Notice of Application To Withdraw From Listing and Registration; (Beta Well Service Inc., Common Stock, No Par Value) File No. 1–11670

January 20, 1995.

Beta Well Service Inc. (''Company'') has filed an application with the Securities and Exchange Commission (''Commission''), pursuant to Section 12(d) of the Securities Exchange Act of 1934 (''Act'') and Rule 12d2–2(d) promulgated thereunder, to withdraw the above specified security (''Security'') from listing and registration on the American Stock Exchange, Inc. (''Amex'').

The reasons alleged for striking the Security from listing and registration include the following:

According to the Company, the Company received a letter dated October 11, 1994, from the Exchange stating that it was considering delisting the Security because it believed that the Company had violated the Exchange's listing agreement and disclosure policies. After the Company submitted its responses to the Exchange by letters dated October 24, 1994 and November 1, 1994, the Exchange sent a letter to the Company dated November 23, 1994, stating that the Exchange had decided to delist the Security. Although the Company initially elected to appeal the Exchange's decision to delist the Security to the Exchange's Board of Governors, the Company has decided to settle matters by removing the Security from listing on the Exchange. The Company is now of the position that in view of the Impasses between the Exchange and the Company and the large expenditures of money and management time that would be required before a final resolution of the matters at issue could be obtained, it is in the best interest of both the Company and its shareholders that matters be settled by delisting the Security from the Exchange.

The Exchange has also agreed that it would be in the best interest of the Exchange and the investing public to resolve this issue between the Company and the Exchange in this manner.

Any interested person may, on or before February 10, 1995, submit by letter to the Secretary of the Securities and Exchange Commission, 450 Fifth Street, N.W., Washington, D.C. 20549, facts bearing upon whether the application has been made in accordance with the rules of the Amex and what terms, if any, should be imposed by the Commission for the protection of investors. The Commission, based on the information submitted to it, will issue an order granting the application after the date mentioned above, unless the Commission determines to order a hearing on the matter.

For the Commission, by the Division of Market Regulation, pursuant to delegated authority.

Jonathan G. Katz,

Secretary.

[FR Doc. 95–1915 Filed 1–25–95; 8:45 am]

BILLING CODE 8010–01–M

[Release No. 34–35246; International Series Release No. 773 File No. SR-Amex-94-60]

Self-Regulatory Organizations; Notice of Filing of Proposed Rule Change by the American Stock Exchange, Inc. Relating to the Listing of Options and Long-Term Options Based on a Reduced-Value of the Deutscher Aktienindex (DAX)

January 19, 1995.

Pursuant to Section 19(b)(1) of the Securities Exchange Act of 1934 (''Act''), 15 U.S.C. 78s(b)(1), notice is hereby given that on December 15, 1994, the American Stock Exchange, Inc. (''Amex'' or ''Exchange'') filed with the Securities and Exchange Commission (''Commission'') the proposed rule change as described in Items I, II, and III below, which Items have been prepared by the Amex. The Commission is publishing this notice to solicit comments on the proposed rule change from interested persons.

I. Self-Regulatory Organization's Statement of the Terms of Substance of the Proposed Rule Change

The Exchange proposes to approve for listing and trading standardized options and long-term options on a reduced-value of the Deutscher Aktienindex (''DAX Index'' or ''Index'') computed at one-tenth of the full-value of the Index. In addition, the Amex proposes to amend Rule 904C(b) to provide for a position limit for standardized options on the Index of 25,000 contracts on the same side of the market, provided no more than 15,000 of such contracts are in series in the nearest expiration month. The text of the proposed rule change is available at the Office of the Secretary, the Amex, and at the Commission.

II. Self-Regulatory Organization's Statement of the Purpose of, and Statutory Basis for, the Proposed Rule Change

In its filing with the Commission, the Exchange included statements concerning the purpose of and basis for the proposed rule change and discussed any comments it received on the proposed rule change. The text of these statements may be examined at the places specified in Item IV below. The Amex has prepared summaries, set forth in sections (A), (B), and (C) below, of the most significant aspects of such statements.

(A) Self-Regulatory Organization's Statement of the Purpose of, and the Statutory Basis for, the Proposed Rule Change

The Exchange is proposing to trade standardized options and long-term options on a reduced-value of the DAX Index, and internationally recognized, capitalization-weighted [1] index of 30 highly capitalized German stocks trading on the Frankfurt Stock Exchange (''FSE'').[2] The stocks included in the Index are among the largest German corporations and their shares are among the most actively traded of German issuers. The DAX Index is composed of ten broad industry groups including chemicals, automobile manufacturers, banks, and insurance companies.

The median capitalization of the companies in the Index as of December 2, 1994, was US $6.52 billion.[3] The average market capitalization of these companies was US $8.78 billion as of that date. The market capitalizations of the individual companies in the Index ranged from US $740.51 million to US $32.02 billion as of December 2, 1994. Also on that date, the largest component of the Index, Allianz AG Holdings, accounted for 12.15% of the total weighting of the DAX Index, while the smallest, Deutsche Babcock AG, accounted for 0.28% of the weight of the Index. The five highest weighted components of the Index on that date accounted for 43.69% of the total weight of the Index. Average daily volume in the component securities for the period from June 1994, through November 1994, ranged from a low of approximately 59,408 shares to a high of 1.04 million shares, with an average daily trading volume for all components of the Index of approximately 338,449 shares per day. The Index had a closing value of 2,038.5 on December 2, 1994.

The DAX Index is maintained by the FSE in conjunction with the Borsen-Zeitung (an industry newspaper). To maintain continuity of the Index, the FSE adjusts the Index to reflect certain events relating to the component stocks. In addition, the composition of the DAX Index is reviewed periodically by the FSE. The FSE will not alter the composition of the DAX Index unless a stock fails to meet certain criteria, *e.g.*, market capitalization and trading volume. If possible, a replacement stock will be selected by the FSE from the same industry as the stock that it is replacing.

Index Calculation

The DAX Index is a capitalization-weighted index and is calculated by multiplying the price of each component security by its listed capital,[4] adding those sums and dividing by the current Index divisor. The Index divisor was initially determined to yield a benchmark value of 1,000 on December 30, 1987. The divisor is adjusted by the FSE for the changes described above regarding Index maintenance.

The value of the Index is calculated every minute by the FSE from 10:30 a.m. to 1:30 p.m. Frankfurt time (4:30 a.m. to 7:30 a.m. New York time) [5] and is disseminated over Reuters News Service, among others.[6] For purposes of standardized options trading, the Index trading value (''Trading Value'') will be one-tenth the level of the DAX Index as calculated and disseminated by the FSE. Thus, at the close of trading in December 2, 1994, the Index value was at 2,038.5, the Trading Value for Index options trading on the Amex would have been 203.85.

Options Expiration and Settlement

The proposed options on the Trading Value of the Index are to be European-

[1] The capitalization of a particular stock in the DAX Index is calculated by multiplying the price of the stock by the ''listed capital.'' Listed capital includes common and preferred shares and shares held in the corporate treasury. The Amex represents that this weighting method differs from the method used in calculating domestic capitalization-weighted indexes, which are calculated by multiplying the price of the stock only by the number of common shares.

[2] The components of the Index are as follows: Allianz AG Holdings; BASF AG; Bayer AG; Bayer Hypo/Wech; BMW; Bayer Vereinsbank AG; Commerzbank AG; Continental AG; Daimler-Benz AG; Beutsche Babcock AG; Beutsche Bank AG; Degussa AG; Dresdner Bank AG; Henkel KGAA-Pfd; Hoechst AG; Karstadt AG; Kaufhof Holdings AG; Lufthansa AG; Linde AG; Man AG; Metallgesellsch; Mannesmann AG; Preussag AG; RWE AG; Schering AG; Siemens AG; Thyssen AG; Veba AG; Viag AG; and Volkswagen AG.

[3] Based on the exchange rate of DM 1=US $1.5800 prevailing on December 2, 1994.

[4] See supra note 1.

[5] Telephone conversation between Claire McGrath, Managing Director and Special Counsel, Derivative Securities, Amex, and Brad Ritter, Senior Counsel, Office of Market Supervision, Division of Market Regulation, Commission, on January 5, 1995.

[6] The Amex represents that the FSE also operates the Integrated Stock Exchange Trading and Information System (''IBIS'') that is available to trading the 30 DAX Index components from 8:30 a.m. to 5:00 p.m. Frankfurt time (2:30 a.m. to 11:00 a.m. New York time). Because trading on IBIS extends for 3½ hours after trading of the FSE ends and overlaps trading on the Amex for two hours (9:00 a.m. to 11:00 a.m. New York time), the Amex will disseminate, for information purposes only, an Index Trading Value (as defined herein) based on the ''indicative DAX'' level disseminated by IBIS. Once trading on IBIS has concluded, the Amex will disseminate a closing Trading Value based on the ''indicative DAX'' level disseminated by IBIS. The ''indicative DAX'' as disseminated by IBIS will have a different ticker symbol from the DAX Index value as reported by the FSE.

style,[7] and cash-settled. Trading hours for the Index options will be 9:00 a.m. to 4:15 p.m. New York time. Options on the Trading Value of the Index will expire on the Saturday following the third Friday of the expiration month (''Expiration Friday''). The last trading day in an option series will normally be the business day immediately preceding Expiration Friday of each expiration month (normally a Thursday) and trading in expiring options will cease at the close of trading on such day. The exercise settlement value for all of the expiring reduced-value Index options will be calculated based upon the closing value of the Index as determined by the FSE. The FSE calculates an average Index value based upon the average of ten separate Index levels, taken once each minute, between 1:21 p.m. and 1:30 p.m. Frankfurt time on the day following the last day of trading in the expiring contracts, i.e., normally Expiration Friday. The Amex represents that if a component stock does not trade during this interval or if it fails to open for trading, the last available price of the stock will be used by the FSE to calculate the value of the Index. The Amex will then use that value to calculate the settlement Trading Value for the reduced-value Index options. When an option expiration is moved in accordance with an Exchange holiday, the last trading day for the expiring Index options will be the Wednesday before Expiration Friday and the exercise settlement value of the Index options will be determined at the close of the regular Thursday trading session on the FSE, even if the FSE is open for trading on Expiration Friday. If the FSE will be closed on an Expiration Friday, the last trading day for expiring Index options listed by the Amex will be on the Wednesday before Expiration Friday.

The Exchange plans to list reduced-value Index options series with expirations in the three near-term calendar months and in the three additional calendar months in the March cycle. In addition, longer term reduced-value Index options series having up to 36 months to expiration may be traded (''Index LEAPS''). In lieu of such long-term options on the Trading Value of the Index, the Exchange may instead list long-term reduced-value options based on one-tenth of the Index's Trading Value, i.e., 1/100th of the value of the DAX Index as calculated by the FSE. The current and closing trading values of such reduced-value Index LEAPS will, after the initial computation, be rounded to the nearest one-hundredth. In either event, the interval between expiration months for all long-term Index options will not be less than six months.

Exchange Rules Applicable to Stock Index Options

Amex Rules 900C through 980C will apply to the trading of standardized and long-term option contracts based on the DAX Index. These rules cover issues such as sales practices, margin requirements, exercise prices, position limits, and floor trading procedures. Surveillance procedures currently used to monitor trading in each of the Exchange's other index options will also be used to monitor trading in options on the DAX Index. In order to provide an adequate mechanism for sharing surveillance information with respect to the Index's component stocks, the Amex represents that it has entered into discussions with representatives of the FSE and has reached preliminary agreement with respect to establishing an appropriate means to accomplish such information sharing.

The Amex represents that the DAX Index is deemed to be a Stock Index Option under Rule 901C(a) and a Broad Stock Index Group under Rule 900C(b)(1). With respect to Rule 903C(b), the Exchange proposes to list near-the-money (i.e., within ten points above or below the current Index value) options series on the Index at 2-½ point strike (exercise) price intervals when the value of the Index is below 200 points. In addition, the Exchange proposes to establish position limits for options on the reduced-value DAX Index, including Index LEAPS, pursuant to Rule 904C(b), of 25,000 contracts on the same side of the market, provided no more than 15,000 of such contracts are in series in the nearest term month.

In anticipation of substantial activity in the options on this Index (including institutional activity), the Exchange also proposes to have the ability to utilize its Auto-Ex system for orders in the reduced-value DAX Index options of up to 50 contracts. Auto-Ex is the Exchange's automated execution system which provides for the automatic execution of market and marketable limit orders at the best bid or offer at the time the order is entered. The Exchange represents that the ability to use Auto-Ex for orders of up to 50 contracts will provide customers with deep, liquid markets as well as expeditious executions.

The Exchange believes that the proposed rule change is consistent with Section 6(b) of the Act, in general, and furthers the objectives of Section 6(b)(5) in particular, in that it is designed to prevent fraudulent and manipulative acts and practices, to promote just and equitable principles of trade, to foster cooperation and coordination with persons engaged in facilitating transactions in securities, and to remove impediments to and perfect the mechanism of a free and open market and a national market system.

(B) Self-Regulatory Organization's Statement on Burden on Competition

The Amex does not believe that the proposed rule change will impose any inappropriate burden on competition.

(C) Self-Regulatory Organization's Statement on Comments on the Proposed Rule Change Received From Members, Participants, or Others

No written comments were solicited or received with respect to the proposed rule change.

III. Date of Effectiveness of the Proposed Rule Change and Timing for Commission Action

Within 35 days of the date of publication of this notice in the **Federal Register** or within such longer period (i) as the Commission may designate up to 90 days of such date if it finds such longer period to be appropriate and publishes its reasons for so finding or (ii) as to which the self-regulatory organization consents, the Commission will:

(A) By order approve such proposed rule change, or

(B) institute proceedings to determine whether the proposed rule change should be disapproved.

IV. Solicitation of Comments

Interested persons are invited to submit written data, views and arguments concerning the foregoing. Persons making written submissions should file six copies thereof with the Secretary, Securities and Exchange Commission, 450 Fifth Street, N.W., Washington, D.C. 20549. Copies of the submission, all subsequent amendments, all written statements with respect to the proposed rule change that are filed with the Commission, and all written communications relating to the proposed rule change between the Commission and any person, other than those that may be withheld from the public in accordance with the provisions of 5 U.S.C. 552, will be available for inspection and copying in the Commission's Public Reference Section, 450 Fifth Street, N.W., Washington, D.C. Copies of such filing

[7] European-style options may only be exercised during a specified period immediately prior to expiration of the options.

will also be available for inspection and copying at the principal office of the Amex. All submissions should refer to File No. SR-Amex-94–60 and should be submitted by February 16, 1995.

For the Commission, by the Division of Market Regulation, pursuant to delegated authority.[8]

Margaret H. McFarland,

Deputy Secretary.

[FR Doc. 95–1978 Filed 1–25–95; 8:45 am]

BILLING CODE 8010–01–M

[Release No. 34–35247; International Series Release No. 774 File No. SR–CBOE–95–01]

Self-Regulatory Organizations; Notice of Filing of Proposed Rule Change by the Chicago Board Options Exchange, Inc. Relating to the Listing of Warrants on the Deutscher Aktien Index (''DAX Index'')

January 19, 1995.

Pursuant to Section 19(b)(1) of the Securities Exchange Act of 1934 (''Act''),[1] and Rule 19b–4 thereunder,[2] notice is hereby given that on January 5, 1995, the Chicago Board Options Exchange, Inc. (''CBOE'' or ''Exchange'') filed with the Securities and Exchange Commission (''Commission'') the proposed rule change as described in Items I, II, and III below, which Items have been prepared by the Exchange. The Commission is publishing this notice to solicit comments on the proposed rule change from interested persons.

I. Self-Regulatory Organization's Statement of the Terms of Substance of the Proposed Rule Change

The CBOE proposes to list and trade warrants based on the Deutscher Aktien Index (''DAX Index'' or ''Index''), a broad-based index.[3] The Exchange represents that the listing and trading of warrants on the Exchange is permitted by CBOE Rule 31.5(E). The text of the proposed rule change is available at the Office of the Secretary, CBOE, and at the Commission.

II. Self-Regulatory Organization's Statement of the Purpose of and Statutory Basis for, the Proposed Rule Change

In its filing with the Commission, the Exchange included statements concerning the purpose of and basis for the proposed rule change and discussed any comments it received on the proposed rule change. The text of these statements may be examined at the places specified in Item IV below. The CBOE has prepared summaries, set forth in Sections (A), (B), and (C) below, of the most significant aspects of such statements.

(A) Self-Regulatory Organization's Statement of the Purpose of, and Statutory Basis for, the Proposed Rule Change

The Exchange represents that it is permitted to list and trade index warrants under CBOE Rule 31.5(E). The Exchange is now proposing to list and trade index warrants based upon the DAX Index. The Exchange further represents that the listing and trading of Index warrants will comply in all respects with CBOE Rule 31.5(E), as discussed below.

Index Design [4]

The DAX Index is a capitalization-weighted index of 30 German blue-chip equity securities listed on the Frankfurt Stock Exchange (''FSE'').[5] The Exchange represents that warrants on the DAX Index will provide investors with a low-cost means of participating in the German economy and hedging against the risk of investing in that economy.

The 30 stocks comprising the DAX Index were selected by the FSE for their high market capitalization and high degree of liquidity. The DAX Index stocks are drawn from a broad base of industries and are representative of the industrial composition of the broader German equity market. The CBOE represents that the stocks contained in the Index account for 70% of the trading volume on the FSE.

The DAX Index is weighted by the market capitalization of the component stocks. The capitalization of a particular stock in the Index is calculated by multiplying the listed capital[6] by the price of the stock and a multiple determined by the FSE.

As of August 31, 1994, the CBOE represents that the 30 stocks contained in the Index range in market capitalization from DM 1.8 billion (US$1.14 billion)[7] to DM 50.1 billion (US$31.7 billion) with the median capitalization of the firms in the Index of DM 9.9 billion (US$6.3 billion). Also as of that date, the largest 13 stocks in the Index accounted for approximately 75% of the total weight of the Index with no single security accounting for more than 10.87% or less than 0.37% of the total weight of the Index. Average daily trading volume in the components of the Index for the period from March 1, 1994, through August 31, 1994, ranged from a low of 50,981 shares to a high of 820,738 shares, with an average daily trading volume for all components during that period of approximately 295,000 shares. The Index is composed of ten broad industry groups, including, among others, chemicals, automobile, and insurance companies which, the CBOE represents, reflect the industry composition of the German equity market.

Calculation

The DAX Index reflects changes in the capitalization of the component stocks relative to the base value of 1,000 on December 30, 1987. The base value was reached by multiplying the price of each stock by the number of listed shares of that stock, obtaining the sum for all components, and then dividing by a divisor determined to give the Index an initial value of 1,000. The Index had a closing value of 2,212.85 on August 31, 1994.

The value of the DAX Index is calculated every minute by the FSE from 9:30 a.m. to 1:30 p.m., Frankfurt time (3:30 a.m. to 7:30 a.m. Eastern time), based on last sale prices of the component stocks. The value of the Index is not disseminated by the FSE until opening prices are avilable for at least 15 components of the Index representing at least 70 percent of the capitalization of the Index. Thereafter, with respect to any stock that has not yet opened for trading, the Index value is calculated using the previous day's closing price for those components.

---

[8] 17 CFR 200.30–3(a)(12) (1994).

[1] 15 U.S.C. 78s(b)(1) (1988).

[2] 17 CFR 240.19b–4 (1991).

[3] The Exchange previously submitted a rule filing to permit the listing and trading of index options on a reduced-value DAX Index. See Securities Exchange Act Release No. 35130 (December 20, 1994), 59 FR 66985 (December 28, 1994) (notice of File No. SR–CBOE–94–47).

[4] The Commission notes that the Exchange incorporates by reference to its proposal to list Index options, most of the information and representations contained in this section and in the following sections on Index calculation and maintenance. *Id.* For convenience, the Commission has adapted the text of that filing for inclusion herein.

[5] The components of the Index are as follows: Allianz AG Holdings, BASF AG, Bayer AG, Bayer Hypo/Wech, BMW, Bayer Vereinsbank AG, Commerzbank AG, Continental AG, Daimler-Benz AG; Deutsche Babcock AG; Deutsche Bank AG; Degussa AG; Dresdner Bank AB; Henkel KGAA–Pfd; Hoechst AG; Karstadt AG; Kaufhof Holdings AG; Lufthansa AG; Linde AG; Man AG; Metallgesellsch; Mannesmann AG; Preussag AG; RWE AG; Schering AG; Siemens AG; Thyssen AG; Veba AG; Viag AG; and Volkswagen AG.

[6] Listed capital is determined based on the issuer's preferred and common shares registered for trading on the FSE. The CBOE notes that domestic indexes, such as the S&P 500 Index, are calculated based on the shares of common stock only.

[7] Based on the exchange rate of DM 1.5815/US$1 prevailing on August 31, 1994.

Maintenance

The Index is maintained by the FSE. The value of the Index is calculated by the FSE and disseminated over Reuters News Service, among others.

In order to maintain continuity of the value of the Index, the FSE adjusts the Index to reflect certain events relating to the component stocks. For example, the FSE adjusts the Index value to reflect cash dividends paid on the component securities.[8] An adjustment is also applied by the FSE whenever a company issues new shares for which the shareholders have preemptive rights, or when other intra-year events, such as mergers and spinoffs, occur.

The number of listed shares of each stock used in the calculation of the value of the Index is updated by the FSE annually in September. At that time, the adjustment factors mentioned above, which reflect the dividend payments and/or intra-year adjustments, as rescaled to one, with an additional adjustment made to maintain continuity in the value of the Index.[9]

In addition, the composition of the Index is reviewed periodically by the FSE. It is the FSE's policy not to alter the composition of the DAX Index unless a stock fails to meet certain criteria, *e.g.*, market capitalization and trading volume. Replacements are usually made from a list of substitute stocks. If it is not possible to substitute a stock from the same industry group, a stock from another industry may be substituted.

Index Warrant Trading

The proposed warrants will be direct obligations of their issuer subject to cash-settlement in U.S. dollars, and either exercisable throughout their life (i.e., American-style) or exercisable only immediately prior to their expiration date (i.e., European-style). Upon exercise, the holder of a warrant structured as a ''put'' will receive payment in U.S. dollars to the extent that the DAX Index has declined below a cash settlement value specified at the time of issuance. Conversely, upon exercise, holders of an Index warrant structured as a ''call'' will receive payment in U.S. dollars to the extent that the DAX Index has increased above a cash settlement value specified at the time of issuance. Index warrants that are ''out-of-the-money'' at the time of expiration will expire worthless.

Warrant Listing Standards and Customer Safeguards

CBOE Rule 31.5(E) sets forth the guidelines applicable to listing index warrants based on established foreign and domestic stock indexes. The warrant issues based on the DAX Index will conform to the listing guidelines under Rule 31.5(E) which provide that: (1) The issuer shall have assets in excess of $100,000,000 and otherwise substantially exceed the size and earnings requirements in Rule 31.5(A); (2) the term of the warrants shall be for a period ranging from one to five years from date of issuance; and (3) the minimum public distribution of such issues shall be one million warrants, together with a minimum of 400 public holders and have an aggregate market value of at least $4 million.

Because index warrants are derivative in nature and closely resemble index options, the CBOE will also require that DAX Index warrants be sold only to customers whose accounts have been approved for options trading pursuant to Exchange Rule 9.7. The suitability standards of Exchange Rule 9.9 apply to recommendations in Index warrants. Further, the Exchange will require that customer positions in DAX Index warrants be subject to the margin requirements applicable to options.[10]

In addition, Exchange Rule 30.50, Interpretation .04 requires that the standards of Rule 9.10(a) regarding discretionary orders be applied to Index warrants. This rule requires a branch office manager or registered options principal to approve and initial a discretionary order in Index warrants on the day entered. Prior to the commencement of trading of Index warrants, the Exchange will distribute a circular to its membership calling attention to certain compliance responsibilities when handling transactions in Index warrants. The Exchange will submit a draft of the circular to the Commission staff for approval prior to distribution to members.

On September 28, 1994, the Exchange submitted for Commission approval, proposed rule changes governing customer protection and margin requirements for stock index warrants, currency index warrants, and currency warrants, and position limits for stock index warrants.[11] The Exchange represents that DAX Index warrants issued subsequent to approval of those proposals will be subject to the new rules.

Surveillance

The Exchange expects to apply its existing index warrant surveillance procedures to DAX Index warrants. The Exchange has a market surveillance agreement with the FSE. The Exchange represents that this agreement will enable the Exchange to carry out its regulatory responsibilities with respect to the surveillance of trading in the stocks comprising the Index.

In addition, the German legislature recently adopted new laws that criminalize insider trading and provide for the creation, on or around January 1995, of an independent securities regulatory authority. The Exchange believes that these developments will facilitate Commission approval of warrant trading based on the DAX Index because they will enhance the surveillance of trading in the stocks comprising the Index.

The Exchange believes that the proposed rule change is consistent with Section 6 of the Act, in general, and furthers the objectives of Section 6(b)(5) of the Act,[12] in particular, in that it is designed to prevent fraudulent and manipulative acts and practices and to promote just and equitable principles of trade, and is not designed to permit unfair discrimination between customers, issuers, brokers, or dealers.

(B) Self-Regulatory Organization's Statement on Burden on Competition

The Exchange does not believe that the proposed rule change will impose any inappropriate burden on competition.

(C) Self-Regulatory Organization's Statement on Comments on the Proposed Rule Change Received From Members, Participants, or Others

Written comments on the proposed rule change were neither solicited nor received.

[8] The CBOE represents that the FSE makes this adjustment because German companies usually pay their dividends only once per year (generally in June or July). If not adjusted, the annual dividend payment would result in a significant drop in the value of the Index at the time when the dividends are paid. As a result, the CBOE represents that the FSE calculates the dividend adjustment such that share prices reflect full dividend reinvestment. As calculated by the FSE, adjustments are made by multiplying each stock's capitalization by an adjustment factor (related to the amount of the dividend) that is particular to each stock. The resulting ''adjusted'' capitalization for each of the 30 stocks is summed and divided by the base date capitalization.

[9] The FSE also multiplies the ratio of capitalization (current capitalization divided by base date capitalization) by the ''chain index factor.'' The FSE employs the ''chain index factor'' to reflect all previous dividend and capitalization adjustments made during the year. In this manner, continuity in the value of the Index is maintained despite changes in the shares and rescaling of the individual adjustment factors back to one.

[10] See CBOE Rule 12.3.

[11] See Securities Exchange Act Release No. 35178 (December 29, 1994), 60 FR 2409 (January 9, 1994) (notice of File No. SR–CBOE–94–34).

[12] 15 U.S.C. 78f(b)(5) (1988).

III. Date of Effectiveness of the Proposed Rule Change and Timing for Commission Action

Within 35 days of the date of publication of this notice in the **Federal Register** or within such longer period (i) as the Commission may designate up to 90 days of such date if it finds such longer period to be appropriate and publishes its reasons for so finding or (ii) as to which the Exchange consents, the Commission will:

(a) By order approve such proposed rule change, or

(b) Institute proceedings to determine whether the proposed rule change should be disapproved.

IV. Solicitation of Comments

Interest persons are invited to submit written data, views and arguments concerning the foregoing. Persons making written submissions should file six copies thereof with the Secretary, Securities and Exchange Commission, 450 Fifth Street, N.W., Washington, D.C. 20549. Copies of the submission, all subsequent amendments, all written statements with respect to the proposed rule change that are filed with the Commission, and all written communications relating to the proposed rule change between the Commission and any person, other than those that may be withheld from the public in accordance with the provisions of 5 U.S.C. 552, will be available for inspection and copying in the Commission's Public Reference Section, 450 Fifth Street, N.W., Washington, D.C. Copies of such filing will also be available for inspection and copying at the principal office of the CBOE. All submissions should refer to File No. SR–CBOE–95–01 and should be submitted by February 16, 1995.

For the Commission, by the Division of Market Regulation, pursuant to delegated authority.[13]

FR Doc. 95–1979 Filed 1–25–95; 8:45 am]

BILLING CODE 8010–01–M

[Release No. 34–35231; File No. SR–MSTC–94–13]

Self-Regulatory Organization; Midwest Securities Trust Company; Notice of Filing and Immediate Effectiveness of Proposed Rule Change That Merges the MSTC Bearer Bond System and the MSTC Registered Bond System

January 13, 1995.

Pursuant to Section 19(b)(1) of the Securities Exchange Act of 1934 (''Act''),[1] notice is hereby given that on October 11, 1994, the Midwest Securities Trust Company (''MSTC'') filed with the Securities and Exchange Commission (''Commission'') the proposed rule change as described in Items I, II, and III below, which Items have been prepared mainly by MSTC, a self-regulatory organization. The Commission is publishing this notice to solicit comments on the proposed rule change from interested persons.

I. Self-Regulatory Organization's Statement of the Terms of Substance of the Proposed Rule Change

MSTC proposes to merge its bearer bond system into its registered bond system and to make certain related conforming changes.

II. Self-Regulatory Organization's Statement of the Purpose of, and Statutory Basis for, the Proposed Rule Change

In its filing with the Commission, MSTC included statements concerning the purpose of and basis for the proposed rule change and discussed any comments it received on the proposed rule change. The text of these statements may be examined at the places, specified in Item IV below. MSTC has prepared summaries, set forth in sections (A), (B), and (C) below, of the most significant aspects of such statements.

(A) Self-Regulatory Organization's Statement of the Purpose of, and Statutory Basis for, the Proposed Rule Change

MSTC currently processes bearer municipal bonds in a different system from that which is used to process registered bonds and equities.[2] This proposal merges the bearer and registered securities processing systems with the registered securities processing system being the surviving system.

MSTC believes that merging the two systems provided several advantages. First, it reduces the number of separate reports that must be provided to participants. Second, it consolidates into one system all bearer and registered securities activity, input/inquiry functions, reports, and file transmissions. Third, it makes intraday transactions in bearer securities subject to the 1:30 p.m. cutoff that is currently in effect for registered securities transactions rather than the existing 2:30 p.m. cutoff time.[3] Finally, the merger permits bearer securities to be eligible for MSTC's pledge loan program.

MSTC believes that the proposed rule change is consistent with Section 17A of the Act[4] in that it will facilitate the prompt and accurate clearance and settlement of securities transactions and will assure the safeguarding of securities and funds which are in MSTC's custody or control or for which MSTC is responsible.

(B) Self-Regulatory Organization's Statement on Burden on Competition

MSTC believes that the proposed rule change will not place any burden on competition.

(C) Self-Regulatory Organization's Statement on Comments on the Proposed Rule Change Received From Members, Participants or Others

MSTC has neither solicited nor received any written comments on the proposed rule change.

III. Date of Effectiveness of the Proposed Rule Change and Timing for Commission Action

The foregoing rule change has become effective pursuant to Section 19(b)(3)(A)(iii) of the Act[5] and Rule 19b–4(e)(4) thereunder[6] because the proposal effects a change in an existing service of MSTC which does not adversely affect the safeguarding of securities or funds in the custody or control of MSTC or for which it is responsible and does not significantly affect the respective rights or obligations of MSTC or persons using the services.

At any time within sixty days of the filing of the proposed rule change, the Commission may summarily abrogate such rule change if it appears to the Commission that such action is necessary or appropriate in the public interest, for the protection of investors, or otherwise in furtherance of the purposes of the Act.

IV. Solicitation of Comments

Interested persons are invited to submit written data, views, and arguments concerning the foregoing. Persons making written submission should file six copies thereof with the Secretary, Securities and Exchange Commission, 450 Fifth Street, N.W., Washington D.C. 20549. Copies of the submissions, all subsequent

---

[13] 17 CFR 200.30–3(a)(12) (1994).

[1] 15 U.S.C. 78s(b)(1) (1994).

[2] The only bearer securities currently processed by MSTC are municipal bonds. The registered securities processing system, the ''V3 System,'' is an enhanced electronic system. Telephone conversation between David T. Rusoff, Attorney, Foley & Lardner, and Thomas C. Etter, Jr., Senior Counsel, Division of Market Regulation, Commission (December 1, 1994).

[3] All times in this proposal are Central Time.

[4] 15 U.S.C. 78q–1 (1988).

[5] 15 U.S.C. 78s(b)(3)(A)(iii) (1988).

[6] 17 CFR 240.19b–4(e)(4) (1994).

amendments, all written statements with respect to the proposed rule change that are filed with the Commission, and all written communications relating to the proposed rule change between the Commission and any person, other than those that may be withheld from the public in accordance with the provisions of 5 U.S.C. § 442, will be available for inspection and copying at the Commission's Public Reference Section, 450 Fifth Street, N.W., Washington, D.C. 20549. Copies of such filing will also be available at the principal offices of MSTC. All submissions should refer to File No. SR–MSTC–94–13 and should be submitted by February 16, 1995.

For the Commission, by the Division of Market Regulation, pursuant to delegated authority.[7]

Margaret H. McFarland,

Deputy Secretary.

[FR Doc. 95–1981 Filed 1–25–95; 8:45 am]

BILLING CODE 8010–01–M

[Release No. 34–35249; International Series Release No. 775 File No. SR–Amex–94–55]

Self-Regulatory Organizations; Notice of Filing of Proposed Rule Change By the American Stock Exchange, Inc. Relating to the Listing of Warrants Based on the Deutscher Aktienindex (DAX)

January 19, 1995.

Pursuant to Section 19(b)(1) of the Securities Exchange Act of 1934 (''Act''), 15 U.S.C. 78s(b)(1), notice is hereby given that on December 5, 1994, the American Stock Exchange, Inc. (''Amex'' or ''Exchange'') filed with the Securities and Exchange Commission (''Commission'') the proposed rule change as described in Items I, II, and III below, which Items have been prepared by the Amex. The Commission is publishing this notice to solicit comments on the proposed rule change from interested persons.

I. Self-Regulatory Organization's Statement of the Terms of Substance of the Proposed Rule Change

The Exchange proposes to approve for listing and trading under Section 106 of the Amex Company Guide (''Guide'') warrants based on the Deutscher Aktienindex (''DAX Index'' or ''Index''), a capitalization-weighted index of 30 German stocks trading on the Frankfurt Stock Exchange (''FSE''). The text of the proposed rule change is available at the Office of the Secretary, the Amex, and at the Commission.

II. Self-Regulatory Organization's Statement of the Propose of, and Statutory Basis for, the Proposed Rule Change

In its filing with the Commission, the Exchange included statements concerning the purpose of and basis for the proposed rule change and discussed any comments it received on the proposed rule change. The text of these statements may be examined at the places specified in Item IV below. The Amex has prepared summaries, set forth in sections (A), (B), and (C) below, of the most significant aspects of such statements.

(A) Self-Regulatory Organization's Statement of the Purpose of, and the Statutory Basis for, the Proposed Rule Change

Under Section 106 (Currency and Index Warrants) of the Guide, the Exchange may approve for listing index warrants based on established foreign and domestic market indexes.[1] The Amex is currently trading a number of issues of index warrants pursuant to Section 106.[2]

The Amex is proposing to list index warrants based on the DAX Index, an internationally-recognized, capitalization-weighted [3] index of 30 highly capitalized German stocks trading on the FSE.[4] The DAX Index is calculated by the FSE and is updated on a continuous basis. The stocks included in the Index are among the largest German corporations and their shares are among the most actively traded of German issuers. The DAX Index is composed of ten broad industry groups including chemicals, automobile manufacturers, banks, and insurance companies.

The median capitalization of the companies in the Index as of December 2, 1994, was US$6.52 billion.[5] The average market capitalization of these companies was US$8.78 billion as of that date. The market capitalizations of the individual companies in the Index ranged from US$740.51 million to US$32.02 billion as of December 2, 1994. The largest component, Allianz AG Holdings, accounted for 12.5% of the total weighting of the DAX Index, while the smallest, Deutsche Babcock AG, accounted for 0.28% of the weight of the Index. The five highest weighted components of the Index on that date accounted for 43.69% of the total weight of the Index. Average daily volume in the component securities for the period from June 1994, through November 1994, ranged from a low of approximately 59,408 shares to a high of 1.04 million shares, with an average trading volume for all components of the Index of approximately 338,449 shares per day. The Index had a closing value of 2,038.5 on December 2, 1994.

The DAX Index is maintained by the FSE in conjunction which the Borsen-Zeitung (an industry newspaper). The value of the Index is calculated every minute by the FSE from 10:30 a.m. to 1:30 p.m. Frankfurt time (4:30 a.m. to 7:30 a.m. New York time) [6] and is disseminated over Reuters News Service, among others. In addition, the composition of the DAX Index is reviewed periodically by the FSE. The FSE will not alter the composition of the DAX Index unless a stock fails to meet certain criteria, *e.g.*, market capitalization and trading volume. Replacement stocks are usually selected from a list of substitute stocks. If possible, a replacement stock will be selected by the FSE from the same industry as the stock that it is replacing.

The Exchange represents that warrant issues on the DAX Index will conform

---

[7] 17 CFR 200.30–3(a)(12) (1994).

[1] The Commission notes that the Exchange has filed a proposed rule change that would, among other things, revise the criteria pursuant to Rule 106 for listing stock index and currency warrants. These new standards will apply to Index warrants issued following approval of that proposal rule change. *See* Securities Exchange Act Release No. 35086 (December 12, 1994), 59 FR 65561 (December 20, 1994) (notice of File No. SR–Amex–94–38).

[2] *See* Securities Exchange Act Release Nos. 33036 (October 8, 1993), 58 FR 53588 (October 15, 1993) (approval for index warrants on the Amex Hong Kong 30 Index), 31016 (August 11, 1992), 57 FR 37012 (August 17, 1992) (approval for index warrants on the Japan Index), and 30462 (March 11, 1992), 57 FR 9290 (March 17, 1992) (approval for index warrants and index options on FT–SE Eurotrack 200 Index).

[3] The capitalization of a particular stock in the DAX Index is calculated by multiplying the price of the stock by the ''listed capital.'' Listed capital includes common and preferred shares and shares held in the corporate treasury. The Amex represents that this weighting method differs from the method used in calculating domestic capitalization-weighted indexes, which are calculated by multiplying the price of the stock only by the number of common shares.

[4] The components of the Index are as follows: Allianz AG Holdings; BASF AG; Bayer AG; Bayer Hypo/Wech; BMW; Bayer Vereinsbank AG; Commerzbank AG; Continental AG; Daimler-Benz AG; Deutsche Babcock AG; Deutsche Bank AG; Degussa AG; Dresdner Bank AG; Henkel KGAA-Pfd; Hoechst AG; Karstadt AG; Kaufhof Holdings AG; Lufthansa AG; Linde AG; Man AG; Metallgesellsch; Mannesmann AG; Preussag AG; RWE AG; Schering AG; Siemens AG; Thyssen AG; Veba AG; Viag AG; and Volkswagen AG.

[5] Based on the exchange rate of DM 1 = US$1.58 prevailing on December 2, 1994.

[6] Telephone conversation between Claire McGrath, Managing Director and Special Counsel, Derivative Securities, Amex, and Brad Ritter, Senior Counsel, Office of Market Supervision, Division of Market Regulation, Commission, on January 5, 1995.

to the listing guidelines under Section 106 of the Guide, which provide, among other things, that: (1) the issuer shall have tangible net worth of at last US$150 million and otherwise substantially exceed size and earnings requirements in Section 101(A) of the Guide; (2) the term of the warrants shall be for a period ranging from one to five years from the date of issuance; and (3) the minimum public distribution of such issues shall be one million warrants, together with a minimum of 400 public holders, and an aggregate market value of at least US$4 million.

DAX Index warrants will be direct obligations of their issuer subject to cash-settlement during their term. Index warrants will either be exercisable throughout their life (*i.e.,* American-style) or exercisable only during a specified period immediately prior to the expiration date (*i.e.,* European-style). Upon exercise, the holder of a warrant structured as a ''put'' will receive payment in U.S. dollars to the extent that the DAX Index has declined below a cash settlement value specified at the time of issuance. Conversely, upon exercise, holders of an Index warrant structured as a ''call'' will receive payment in U.S. dollars to the extent that the DAX Index has increased above a cash settlement value specified at the time of issuance. Index warrants that are ''out-of-the-money'' at the time of expiration will expire worthless.

The Amex has adopted suitability standards applicable to recommendations to purchasers of Index warrants and transactions in customer accounts. Amex Rule 411, Commentary .02 applies the options suitability standard in Amex Rule 923 to recommendations regarding Index warrants; and the Amex requires that Index warrants be sold only to accounts approved for the trading of options. Amex Rule 421, Commentary .02 requires a Senior Registered Options Principal or a Registered Options Principal to approve and initial a discretionary order in Index warrants on the day the order is entered. In addition, the Amex, prior to the commencement of trading of Index warrants, will distribute a circular to its membership calling attention to specific risks associated with warrants on the DAX Index.[7]

In its order approving listing standards for foreign currency and index warrants, the Commission noted that, with respect to foreign index warrants, there should be an adequate mechanism for sharing surveillance information with respect to an index's component securities.[8] In this regard, the Amex represents that it has entered into discussions with representatives of the FSE and has reached preliminary agreement with respect to establishing an appropriate means to accomplish such information sharing.

The Exchange believes that the proposed rule change is consistent with Section 6(b) of the Act, in general, and furthers the objections of Section 6(b)(5) in particular, in that it is designed to prevent fraudulent and manipulative acts and practices, to promote just and equitable principles of trade, and is not designed to permit unfair discrimination between customers, issuers, brokers, or dealers.

(B) Self-Regulatory Organization's Statement on Burden on Competition

The Amex does not believe that the proposed rule change will impose any inappropriate burden on competition.

(C) Self-Regulatory Organization's Statement on Comments on the Proposed Rule Change Received from Members, Participants or Others

No written comments were solicited or received with respect to the proposed rule change.

III. Date of Effectiveness of the Proposed Rule Change and Timing for Commission Action

Within 35 days of the date of publication of this notice in the **Federal Register** or within such longer period (i) as the Commission may designate up to 90 days of such date if it finds such longer period to be appropriate and publishes its reasons for so finding or (ii) as to which the self-regulatory organization consents, the Commission will:

(A) By order approve such proposed rule change, or

(B) Institute proceedings to determine whether the proposed rule change should be disapproved.

IV. Solicitation of Comments

Interested persons are invited to submit written data, views and arguments concerning the foregoing. Persons making written submissions should file six copies thereof with the Secretary, Securities and Exchange Commission, 450 Fifth Street, N.W., Washington, D.C. 20549. Copies of the submission, all subsequent amendments, all written statements with respect to the proposed rule change that are filed with the Commission, and all written communications relating to the proposed rule change between the Commission and any person, other than those that may be withheld from the public in accordance with the provisions of 5 U.S.C. 552, will be available for inspection and copying in the Commission's Public Reference Section, 450 Fifth Street, N.W., Washington, D.C. Copies of such filing will also be available for inspection and copying at the principal office of the Amex. All submissions should refer to File No. SR–Amex–94–55 and should be submitted by February 16, 1995.

For the Commission, by the Division of Market Regulation, pursuant to delegated authority.[9]

Margaret H. McFarland,

Deputy Secretary.

[FR Doc. 95–1980 Filed 1–25–95; 8:45 am]

BILLING CODE 8010–01–M

[7] The Commission notes that the Amex will be required to submit a draft of the circular to the Commission staff for approval prior to distribution to members.

[8] *See* Securities Exchange Act Release No. 26152 (October 3, 1988), 53 FR 39832 (October 12, 1988).

[9] 17 CFR 200.30–3(a)(12) (1994).

DEPARTMENT OF TRANSPORTATION

Federal Aviation Administration

[AC No. 00–1.1]

Proposed Advisory Circular on Government Aircraft Operations

AGENCY: Federal Aviation Administration, DOT.

ACTION: Request for comments on proposed advisory circular.

SUMMARY: Proposed Advisory Circular (AC) 00–1.1, Government Aircraft Operations, provides guidance on whether particular government aircraft operations are public aircraft operations of civil aircraft operations under the new statutory definition of ''public aircraft.'' This AC contains the FAA's intended application of key terms in the new statutory definition. For operations that have lost public aircraft status under the new law, this AC provides information on bringing those operations into compliance with FAA safety regulations for civil aircraft. It also provides information on applying for an exemption.

DATES: Comments must be received on or before February 27, 1995.

ADDRESSES: Written comments are invited on all aspects of the proposed AC. Commenters must identify file number AC 00–1.1, Government Aircraft Operations. Send all comments on the proposed AC to the following location: Federal Aviation Administration, Flight

Standards Service, Air Carrier Branch (Attention; AFS–200), 800 Independence Avenue, SW., Washington, DC 20591.

FOR FURTHER INFORMATION CONTACT: David Catey, Air Carrier Branch (AFS–220), (202) 267–8094, 800 Independence Avenue SW., Washington, DC 20591.

SUPPLEMENTARY INFORMATION: This AC provides guidance on the FAA's application of the new definition of public aircraft enacted in the Independent Safety Board Act Amendments of 1994, Pub. L. 103–411. This guidance material supplements the final rule titled ''Public Aircraft Definition and Exemption Authority.'' Because Pub. L. 103–411 becomes effective April 23, 1995, the AC is published in its entirety to allow commenters access to the document as quickly as possible.

Issued in Washington, DC on January 20, 1995.

William J. White,

Deputy Director, Flight Standards Service.

1. Purpose. The purpose of this advisory circular (AC) is to provide guidance on whether particular government aircraft operations are public aircraft operations or civil aircraft operations under the new statutory definition of ''public aircraft.'' This AC contains the Federal Aviation Administration's (FAA) intended application of key terms in the new statutory definition. For operations that have lost public aircraft status under the new law, this AC provides information on bringing those operations into compliance with FAA safety regulations for civil aircraft. It also provides information on applying for an exemption. This AC provides acceptable, but not exclusive, means of complying with the law.

2. Reference. 49 U.S.C. 40102(A)(37).

3. Related Material:

a. AC 00–2.8, Advisory Circular Checklist, lists documents that provide guidance on many of the processes required to be followed in the certification and operation of civil aircraft.

b. AC 00–44FF, Status of Federal Aviation Regulations, provides the current public status of the Federal Aviation Regulations (FAR), prices, and order forms.

c. AC 20–132, Public Aircraft, provides guidance that public aircraft status under the Federal Aviation Act does not permit operations outside the territorial limits of the United States without a valid airworthiness certificate.

d. AC 120–12A, Private Carriage Versus Common Carriage of Persons or Property, furnishes general guidelines for determining whether transportation operations by air constitute private or common carriage.

e. AC 120–49, Certification of Air Carriers, provides information and guidance on the certification process for air carriers under FAR Parts 121 and 135.

f. Guide to Federal Aviation Administration Publications provides guidance on identifying and obtaining FAA and other aviation-related publications issued by the Federal Government.

Note: Copies of the above documents may be obtained from the Department of Transportation, M–45.3, General Services Section, Washington, DC 20590.

Thomas C. Accardi,

Director, Flight Standards Service.

Contents

Chapter 1. Determining Whether Aircraft Operations Are Public or Civil

1. Public Aircraft Definition.
   a. Background.
   b. Legislative History.
   c. Statutory Text.
   d. Operational Nature of Definition.
   e. Effective Date.
2. Key Statutory Terms.
   a. ''For Commercial Purposes.''
   b. ''Whose Presence Is Required to Perform.''
   c. ''Associated With the Performance of.''
   d. ''A Governmental Function Such as . . . .''
   (1) Examples.
   (2) ''Firefighting.''
   (3) ''Search and Rescue.''
   (4) ''Law Enforcement.''
   (5) ''Aeronautical Research.''
   (6) ''Biological and Geological Resource Management.''
   e. ''Cost Reimbursement Agreement.''
   f. ''Unit of Government.''
   g. ''Certifies.''
   h. ''Significant and Imminent Threat . . . .''
   i. ''No Service by a Private Operator . . . Reasonably Available.''

Chapter 2. Bringing Operations Into Compliance

3. Basic Types of Civil Aircraft Operations.
   a. FAR Part 91.
   b. FAR Part 125.
   c. FAR Part 121 or 135.
   d. FAR Part 133.
   e. FAR Part 137.
4. Pilot Certification.
   a. Generally.
   b. Domestic Aircraft.
   c. Foreign Aircraft.
   d. Medical Certification.
   e. Instrument Rating.
5. Aircraft Certification.
   a. Generally.
   b. Type Certification.
   c. Aircraft Previously Type Certificated.
   d. Aircraft With No Prior Certification.
   e. Airworthiness Certification.
   f. Procedures for Obtaining Certificate.

Chapter 3. Applying for an Exemption

6. Administrator's Exemption Authority.
   a. In General.
   b. Statutory Requirements.
   c. Delegation of Authority.
7. Key Statutory Terms.
   a. ''The Administrator Finds . . . and . . . Certifies.''
   b. ''Undue Economic Burden.''
   c. ''Aviation Safety Program.''
   d. Aircraft Ineligible for Airworthiness Certificates.
8. Petitions for Exemption.
   a. Procedure.
   b. Contents.

Chapter 1. Determining Whether Operations are Public or Civil

1. Public Aircraft Definition

a. Background. In recent years, there has been a growing concern about the safety of public aircraft, which are statutorily exempt from most types of FAA regulation.

(1) Intergovernmental reimbursement for the use of government-owned aircraft has also engendered a great deal of controversy. Intergovernmental reimbursement is involved when, for example, state and local governments enter into agreements with each other whereby one government reimburses the other for flying firefighting, rescue, or other missions for it. Some private operators have claimed that state and local governments have competed with them unfairly under the public aircraft exemption. The FAA's longstanding interpretation has been that where there is an exchange of money, an operation is ''for commercial purposes'' and does not have public aircraft status—i.e., such an operation is a civil aircraft operation. Many government operators objected that this interpretation made it impossible to carry out their missions, because it is impractical to obtain the services commercially, and too costly to change many of their aircraft to meet FAA requirements for civil aircraft.

(2) In response to this controversy, the FAA announced in the **Federal Register** on August 1, 1994, that it would reconsider whether intergovernmental reimbursement negates public aircraft status. The FAA invited comment from interested parties, 59 FR 39192, and planned to announce its decision by the end of the year.

(3) On October 9, 1994, Congress passed the Independent Safety Board Act Amendments, Pub. L. 103–411, which contained a major change in the definition of ''public aircraft.'' The new law made the FAA's planned reconsideration unnecessary. Under the new law, where intergovernmental reimbursement occurs, the aircraft is a civil aircraft unless the appropriate unit of government certifies ''that the

operation was necessary to respond to a significant and imminent threat to life or property,'' and ''that no service by a private operator was reasonably available to meet the threat.''

b. Legislative History. The purpose of the new law, as reflected in the legislative history, is twofold.

(1) First, in the words of Senator Pressler, the purpose of the new law is ''to mandate that FAA safety regulations, directives, and orders issued for civil aircraft be made applicable to all government-owned, nonmilitary aircraft engaged in passenger transport. * * * [T]he Administrator would be allowed to waive FAA requirements for public aircraft provided an equivalent level of safety has been established by the governmental entity responsible for the aircraft.'' Congressional Record, S14419–S14420 (October 6, 1994).

(2) A second purpose reflected in the legislative history concerned emergency situations like wildfires. As Senator Gorton stated ''the summer wildfires had a drastic impact throughout the State of Washington. Local governments were frustrated that although fires were burning, all available resources could not be utilized. Emergency or not, it is presently prohibited for public agencies to reimburse one another for the use of helicopters. The language in this bill will now give authority to local governments to respond immediately to emergency situations without having to cut through the bureaucratic red tape. In certain cases, where an imminent threat is looming and private operators are not readily available, public agencies will be allowed to use each other's helicopters. This language helps ensure that when an emergency breaks out, all aircraft—public and private—will be available to respond without delay.'' Id. at 14419.

c. Statutory Text. The new definition of public aircraft enacted by Congress is as follows:

(1) an aircraft—

(i) used only for the United States Government; or

(ii) owned and operated (except for commercial purposes), or exclusively leased for at least 90 continuous days, by a government (except the United States Government), including a State, the District of Columbia, or a territory or possession of the United States, or political subdivision of that government; but

(2) does not include a government-owned aircraft—

(i) transporting property for commercial purposes; or

(ii) transporting passengers other than—

(I) transporting (for other than commercial purposes) crewmembers or other persons aboard the aircraft whose presence is required to perform, or is associated with the performance of, a governmental function such as firefighting, search and rescue, law enforcement, aeronautical research, or biological or geological resource management; or

(II) transporting (for other than commercial purposes) persons aboard the aircraft if the aircraft is operated by the Armed Forces or an intelligence agency of the United States.

(3) An aircraft described in the preceding sentence shall, notwithstanding any limitation relating to use of the aircraft for commercial purposes, be considered to be a public aircraft for the purposes of this part without regard to whether the aircraft is operated by a unit of government on behalf of another unit of government, pursuant to a cost reimbursement agreement between such units of government, if the unit of government on whose behalf the operation is conducted certifies to the Administrator of the Federal Aviation Administration that the operation was necessary to respond to a significant and imminent threat to life or property (including natural resources) and that no service by a private operator was reasonably available to meet the threat. 49 U.S.C. 40102(a)(37).

d. Operational Nature of Definition. The status of an aircraft as ''public aircraft'' or ''civil aircraft'' depends on its use in government service and the type of operation that the aircraft is conducting at the time. Rather than speaking of particular aircraft as public aircraft or civil aircraft, it is more precise to speak of particular operations as public aircraft or civil aircraft in nature. If a flight is a mixture of both public aircraft and civil aircraft operations, then it is considered a civil aircraft operation.

(1) Example: An aircraft owned by a state government is used in the morning for a search and rescue mission that meets the statutory definition of public aircraft in all respects. For the search and rescue operation, the aircraft is a public aircraft. Later that same day, however, when the aircraft is used to fly the governor of the state from one meeting to another, the aircraft loses its public aircraft status and is instead a civil aircraft.

(2) Caution: Care must be taken when aircraft are used in both public and civil aircraft operations. Before such aircraft are returned to civil operations, the government operator may need to record in the aircraft records that the aircraft has been returned to civil status by someone authorized to do so under FAR Part 43, if equipment was removed and replaced to accommodate the governmental function.

e. Effective Date. The effective date of the new statute is April 23, 1995.

2. *Meaning of Key Statutory Terms.* The FAA interprets various words, phrases, and clauses in the statutory definition (in their order of appearance in the statute) as follows:

a. *''For Commercial Purposes.''* This term basically means ''for compensation or hire'' as that term historically has been defined by the FAA. The test for determining whether a particular operation is ''for compensation or hire'' is whether the operator receives direct or indirect remuneration for the operation. The remuneration need not be in the form of money; the receipt of other items of value, such as good will or the logging of flight time, have also been held to make an operation ''for compensation or hire.'' Furthermore, no profit need be made; an operation may be ''for compensation or hire'' even if the operator takes a loss. When the operator is a governmental entity, reimbursement from a party not sharing a common treasury with the governmental entity makes the operation ''for commercial purposes.'' Examples:

(1) One state agency reimburses another agency of the same state for conducting operations on its behalf using a state-owned aircraft. Where the two state agencies share a common treasury, the operation is not ''for commercial purposes'' within the meaning of the statute.

(2) A Federal agency reimburses a state agency for conducting aircraft operations on its behalf. This operation is a civil aircraft operations, unless the Federal agency certifies to the FAA Administrator that the operation was necessary to respond to a significant and imminent threat to life or property (including natural resources) and that no service by a private operator was reasonably available to meet the threat, then the aircraft will be a public aircraft. See paragraphs 2 (g) through (i) below.

(3) Flight instruction is offered as part of the curriculum at a state university. The flights involving student instruction are ''for commercial purposes,'' within the meaning of the statute, because students pay tuition to the university for their instruction. Under FAR Section 135.1(b)(1), flights involving student instruction are excepted from the air taxi and commercial operator regulations of FAR Part 135. Instead, they are governed by FAR Part 91.

b. ''*Whose Presence Is Required to Perform.*'' This phrase means either a crewmember or a non-crewmember who will participate in carrying out the governmental function. Examples:

(1) Firefighters who are being carried to a fire scene to fight the fire, when the aircraft is also used for aerial assessment to ensure safe and efficacious deployment of the firefighters, are included.

(2) Persons on board aircraft used in search and rescue operations who are needed to conduct the search when the aircraft is indispensable to the search, or to conduct the rescue operation when the aircraft is the only feasible means of reaching the victim with the necessary speed, are included. Medical evacuation operations carrying persons whose presence is required to perform the medical evacuation, but where the aircraft is used only because it is an equal or better means of transportation than other means are not included; these are considered civil aircraft operations.

(3) Persons on board aircraft conducting law enforcement operations for the purpose of operating searchlights or performing similar observational functions are included. Transporting prisoners is not included.

(4) Persons on board aircraft conducting aeronautical research who are required to make observations and gather data, provided the work can only be done in the aircraft, are included.

(5) Persons on board aircraft engaged in biological and geological resource management, who perform scientific and technical tasks that can only be done from the air, are included.

c. ''*Associated with the Performance of.*'' This clause connotes a noncrewmember support person who, while not essential to performance of the governmental function, is expected to contribute to the effectiveness of those whose presence is required to perform the function.

(1) One of Congress' primary purposes in enacting the new statutory definition of ''public aircraft'' was to increase FAA regulatory oversight of government aircraft. See Congressional Record, S14418–S14424 (October 6, 1994). Giving the phrase ''associated with the performance of'' an overly broad interpretation would be contrary to that intent.

(i) Examples:

(A) A government executive who accompanies firefighters to a fire scene solely to assess what further action the government should take in regard to fighting the fire is ''associated with the performance of'' the governmental function of firefighting. Persons gathering information for dissemination through new media are not considered within the exception.

(B) A government-owned aircraft is used to survey a natural disaster. Individuals whose presence is required to monitor equipment installed in the aircraft for the purpose of the survey are persons ''associated with the performance of'' the governmental function.

d. ''*Governmental Function such as* * * *'' The term ''such as'' in the clause ''a governmental function such as firefighting, search and rescue, law enforcement, aeronautical research, or biological or geological resource management'' indicates that the listed functions are not exhaustive, but that certain other governmental functions would be included as well. In the context of the clause ''governmental function such as firefighting, search and rescue, law enforcement, aeronautical research, or biological or geological resource management,'' the term ''such as'' implies other governmental functions that share a common characteristic with those listed. The unifying characteristic shared by the governmental functions listed in the statute is that they each involve the use of the aircraft as an integral or indispensable element of the operation. That is, the presence of those aboard the aircraft performing the governmental function is required on the aircraft, in the air—rather than merely at the end of the flight.

(1) Examples:

(i) An aerial survey in a government-owned aircraft to determine the extent of a natural disaster is a governmental function within the scope of the statute. This operation would be a public aircraft operation.

(ii) Firefighters are transported from a base camp to the firefront, and before the aircraft lands, it is used for reconnoitering to determine the most effective deployment of the firefighters. This operation falls within the firefighting exception, and is a public aircraft operation.

(iii) Firefighters are flown from one area of the country to a firefighting base in another part of the country. This operation involves transportation that does not fall within the firefighting exception. As a result, compliance with appropriate FAA safety regulations for civil aircraft would be required.

(2) ''*Firefighting.*'' This term includes the drop of fire retardants, water, and smoke jumpers, and transportation of firefighters from a base camp to the firefront, if the flight includes use of the aircraft as an integral part of the firefighting operation, as, e.g., with reconnoitering to determine the most effective deployment of the firefighters.

(3) ''*Search and Rescue.*'' ''Search and rescue'' is a term of art meaning aircraft operations that are flown to locate and rescue people who cannot be located and rescued in a timely manner from the ground. The term includes operations where the aircraft is indispensable to the search, or is the only feasible means of reaching the victim. Victims would be considered to be ''associated with'' the search and rescue operation.

(i) The FAA interprets this term narrowly. The term ''search and rescue'' does not include routine medical evacuation of persons from traffic accidents and the like. However, if no commercial operators are available, medical evacuation operations by a government operator will be considered public aircraft. The FAA does not believe that Congress intended for injured people to be carried in aircraft that are not subject to FAA regulation when other, equally effective means are readily available. Nor does the FAA believe that Congress intended to put state and local governments in competition with commercial operations, which generally provide ample civil aircraft capacity for medical evacuation operations.

(ii) Examples:

(A) A car crashes in a remote location, and the driver will die if she is not immediately transported to a hospital. No commercial operators are available to fly the injured driver to the hospital in an expeditious manner, but the sheriff's helicopter is. The sheriff's flight carrying the injured driver to the hospital is a public aircraft operation.

(B) Same situation, but this time commercial operators are available. The medical evacuation operation by the sheriff is a civil aircraft operation.

(4) ''*Law Enforcement.*'' Law enforcement operations that employ aircraft with searchlights and law enforcement personnel ready for immediate on-the-spot deployment (e.g., spotters looking for fugitives on the ground) are public aircraft operations. Transportation of prisoners; however, does not fall within the category of ''law enforcement'' and is not a public aircraft operation.

(5) ''*Aeronautical Research.*'' Aeronautical research (e.g., conducting flights to determine aircraft performance in various operating environments), even when it requires the presence on board the research aircraft of engineers and technicians who are not part of the crew, is a public aircraft operation.

(6) ''*Biological and Geological Resource Management.*'' This term

means biological and geological resource management that requires the presence of scientific and technical passengers to gather information that can only be gathered by direct observation from the air.

e. ''*Cost Reimbursement Agreement.*'' This term means any agreement, either oral or written, providing for reimbursement of the costs of the aircraft operation. If there is any charge or payment in excess of the cost of the operation, then the agreement does not constitute a cost reimbursement agreement.

f. ''*Unit of Government.*'' This term means a government. The singular characteristic of a unit of government in this context is its common treasury. This interpretation generally allows reimbursement among or between agencies of a state, among or between a city, and among or between agencies of the Federal government without the need for compliance with FAR Parts 121, 125, 133, 135, or 137. However, should a city, state, or Federal agency receive reimbursement from another government, it would need to ensure that it is in compliance with the appropriate portions of the FAR, unless the other government is able to certify that there is a significant and imminent threat to life or property and that no private operator is reasonably available, as discussed below.

g. ''*Certifies.*'' Cost reimbursement between governments does not negate public aircraft status when the government on whose behalf the operation was conducted certifies that there was a significant and imminent threat and that no private operator was reasonably available to meet the threat. The certification by a unit of government should include the following: a description of the significant and imminent threat; a description of the operation undertaken; the date on which the operation occurred; and an explanation of how it was determined that no service by a private operator was reasonably available.

(1) Units of government should retain the required certification, which should be completed contemporaneously, as part of their records in case any question should arise.

(2) A general or ''blanket'' statement that an operator will always comply with statutory requirements will not be considered acceptable. The certification must occur for each occasion of operation.

Note: Congress' intent in amending the public aircraft definition was, in part, to insure that units of government are not impeded in attempting to respond to certain emergency situations. In the words of Senator Gorton, Congress intended that ''when an emergency breaks out, all aircraft—public and private—will be available to respond without delay.'' See paragraph 1(b) above. Consistent with this intent, the FAA does not intend to generally to look behind a unit of government's certification that there was a significant and imminent threat and that no private operator was reasonably available to meet the threat. Thus, it is not expected that FAA inspectors will routinely review or challenge these determinations made by units of government.

h. ''*Significant and Imminent Threat.* * * *'' ''Significant and imminent threat to life or property (including natural resources)'' means a situation in which the authority responsible for responding to the threat has determined that serious injury, death, or significant damage to property may occur before land- or water-borne assistance can be deployed to counter the threat effectively.

i. ''*No Service by a Private Operator* * * *Reasonably Available.*'' No service by a private operator was reasonably available to meet the threat'' means that, as reasonably determined by the authority charged with responding to the threat, no private operator is able, at the time of the threat, to deliver aircraft capable of performing the minimum tasks necessary to respond to the threat by the latest time at which such aircraft would provide an effective response.

Chapter 2. Bringing Operations Into Compliance

3. Basic Types of Civil Aircraft Operations

The government operator should contact the nearest FAA Flight Standards district office (FSDO) for assistance and guidance in bringing its operations into compliance with the FAR. For operations requiring certification, the FSDO manager will assign an FAA aviation safety inspector to assist the government operator during the certification process. Initial inquiries about certification or requests for applications should be in writing or by personal visit to the FSDO.

a. *FAR Part 91.* (1) FAR Part 91 prescribes the general flight rules for all aircraft operations within the United States, including the waters within 3 nautical miles of the U.S. coast. U.S.-registered civil aircraft are required to comply with FAR Part 91. When over the high seas, they must comply with Annex 2 (Rules of the Air) to the Convention on International Civil Aviation.

(2) FAR Part 91 prohibits a pilot from operating a civil aircraft unless it is in an airworthy condition. The pilot in command (PIC) is responsible for determining whether the aircraft is in condition for safe flight. The PIC is required to terminate the flight when unairworthy mechanical, electrical, or structural conditions occur. In addition, the PIC may not operate the aircraft without complying with the operating limitations specified in the approved Airplane or Rotorcraft Flight Manual, markings, and placards, or as otherwise prescribed by the certificating authority of the country of registry.

(3) Under FAR Part 91, the PIC of an aircraft is directly responsible for, and is the final authority as to the operation of that aircraft. In case of an inflight emergency, the PIC is authorized to deviate from any rule in FAR Part 91 to the extent necessary to meet the emergency. However, any PIC who deviates from a rule in FAR Part 91 is required, upon the request of the Administrator, to send a written report of that deviation to the Administrator.

b. *FAR Part 125.* If an operator uses an airplane with a seating configuration for 20 or more passenger seats or a maximum payload capacity of 6,000 pounds or more, and is not engaged in ''common carriage,'' then FAR Part 125 applies. A person is considered to be engaged in ''common carriage'' when ''holding out'' to the general public or to a segment of the public as willing to furnish transportation within the limits of its facilities to any person who wants it. Examples of holding out are as follows: advertising through telephone yellow pages, billboards, television, radio, and individual ticketing. FAR Section 125.11(b) prohibits FAR Part 125 certificate holders from conducting any operation which results directly or indirectly from holding out to the general public. Further information regarding common carriage vs. private carriage can be found in AC 120–12. If the operator is engaged in ''common carriage,'' then FAR Part 121 or 135 applies rather than FAR Part 125.

c. *FAR Part 121 or 135.* When a government-owned aircraft is operated ''for commercial purposes'' (see paragraph 2(a) above), the requirements contained in either FAR Part 121 or 135, depending on the type of operation, must be met. Generally, FAR Part 121 applies to domestic, flag, and supplemental air carriers and commercial operators of large aircraft, while e aircraft, while FAR Part 135 applies to air taxi operators and commercial operators. An operator should consult Special Federal Aviation Regulation (SFAR) No. 38–2 as well as the applicability provisions of each part (FAR Sections 121.1 and 135.1) to

determine whether it is FAR Part 121 or 135 that applies to a particularDO will provide an applicant for a FAR Part 121 or 135 certificate with a videotape on certification and a copy of AC 120–49, Certification of Air Carriers. Once the videotape and the AC have been reviewed, the applicant will complete FAA Form 8400–6, Preapplication Statement of Intent, and the FSDO manager will assign a Certification Team to assist the applicant through each phase of the certification process.

d. *FAR Part 133.* FAR Part 133, Rotorcraft External-Load Operations, prescribes the airworthiness certification requirements for rotorcraft, and the operating and certification rules governing the operation of rotorcraft conducting external-load operations in the United States by any person. The certification rules do not apply to a Federal, state, or local government conducting operations with a government-owned aircraft unless it is operating as a civil aircraft due to receipt of compensation. Federal, state, or local governments must; however, comply with all of the other rules contained in FAR Part 133, even when operating a public aircraft.

(1) FAR Part 133 requires that a person must obtain a Rotorcraft External-Load Operator Certificate issued by the FAA before any rotorcraft external-load operations in the United States are begun. This certificate is valid for 24 calendar months unless it is surrendered, suspended, or revoked prior to the expiration date shown on the certificate.

(2) Rotorcraft used in external-load operations must have been type certificated and must continue to meet the requirements of FAR Part 27 or 29 or of FAR Section 21.25. Rotorcraft must also comply with the airworthiness requirements contained in Subpart D of FAR Part 133 and must have a valid standard or restricted category airworthiness certificate. At the present time, only rotorcraft of U.S. registry are eligible for external-load operations.

(3) Pilots conducting rotorcraft external-load operations must have at least a current commercial pilot certificate with a rating appropriate to the rotorcraft being used, and a Second Class Medical Certificate.

e. *FAR Part 137.* FAR Part 137, Agricultural Aircraft Operations, prescribes the rules which govern the certification and operation of agricultural aircraft operated in the United States, and the issuance of either a private or commercial agricultural aircraft operator certificate for those operations. In a public emergency, a person who conducts agricultural aircraft operations may, where necessary, deviate from any operating rule contained in FAR Part 137 for relief and welfare activities approved by an agency of the United States or of a state or local government. However, each person who deviates from a rule shall complete a report of the aircraft operation involved within 10 days, including a description of the operation and the reasons for it, to the nearest FAA FSDO.

(1) As defined in FAR Part 137, an agricultural aircraft operation means the operation of an aircraft for the purpose of:

(i) dispensing any economic poison;

(ii) dispensing any other substance intended for plant nourishment, soil treatment, propagation of plant life, or pest control; or

(iii) engaging in dispensing activities directly affecting agriculture, horticulture, or forest preservation. It does not include the dispensing of live insects. Forest firefighting is considered to be an agricultural aircraft operation.

(2) FAR Part 137 requires that a person must obtain an Agricultural Aircraft Operator Certificate issued by the FAA before any agricultural aircraft operations in the United States are begun. A rotorcraft may conduct agricultural aircraft operations with external dispensing equipment in place without a rotorcraft external-load operator certificate. However, an operator with a rotorcraft external-load operator certificate may conduct agricultural aircraft operations if it disperses only water on forest fires by rotorcraft external-load means without an agricultural aircraft operator certificate. A Federal, state, or local government conducting agricultural aircraft operations is not required to obtain an Agricultural Aircraft Operator Certificate. They must; however, comply with all of the other rules contained in FAR Part 137.

(3) Aircraft used in agricultural aircraft operations must be certificated and airworthy, and equipped for agricultural operation. They must be equipped with a suitable and properly installed shoulder harness for use by each pilot.

(4) Operators conducting agricultural aircraft operations must have the services of one person who has at least a current U.S. commercial pilot certificate and who is properly rated for the aircraft to be used.

4. Pilot Certification

a. *Generally.* All civil aircraft are required to be operated by pilots certificated under FAR Part 61, Certification: Pilots and Flight Instructors. FAR Part 61 prescribes the requirements for issuing pilot certificates and ratings, the conditions under which those certificates and ratings are necessary, and the privileges and limitations of those certificates and ratings.

b. *Domestic Aircraft.* Pilots operating civil aircraft of U.S. registry are required to have in their personal possession a current pilot certificate issued to them under FAR Part 61. U.S.-registered aircraft may be operated in a foreign country with a pilot license issued by the that country.

c. *Foreign Aircraft.* Foreign aircraft may be operated in the U.S. by pilots who have in their personal possession current pilot certificates issued under FAR Part 61 or a pilot license issued to them or validated for them by the country in which the aircraft is registered.

d. *Medical Certificate.* Pilots operating U.S.-registered civil aircraft are required to have in their personal possession an appropriate current medical certificate issued to them under FAR Part 67, Medical Standards and Certification. FAR Part 67 prescribes the medical standards for issuing medical certificates. A Third Class Medical Certificate is required for Private Pilot certification. A Second Class Medical Certificate is required for Commercial Pilot certification. A First Class Medical Certificate is required for Airline Transport Pilot certification.

e. *Instrument Rating.* Pilots operating civil aircraft under instrument flight rules or in weather conditions less than the minimums prescribed for Visual Flight Rules are required to hold an Instrument Rating or an Airline Transport Pilot Certificate appropriate for the aircraft flown.

5. Aircraft Certification

a. *Generally.* Government aircraft operations that are no longer eligible for public aircraft status must now meet the civil airworthiness standards for certification of aircraft. This includes the aircraft's engines and propellers as well as the aircraft as a whole. A civil aircraft must have a current airworthiness certificate to operate in the National Airspace System. Additionally, all civil aircraft must meet the following requirements:

(1) The aircraft must have an effective U.S. registration certificate on board during all operations as required by FAR Section 91.203.

(2) An appropriate and current airworthiness certificate must be displayed in accordance with FAR Section 91.203(c). An airworthiness certificate is effective as long as the

maintenance, preventive maintenance, and alterations are performed in accordance with FAR Parts 21, 43, and 91, as appropriate, and the aircraft is registered in the United States.

(3) The aircraft must have been inspected in accordance with FAR Section 91.409 within the preceding 12 calendar months.

(i) If the government agency plans to use a progressive inspection program, it must submit a written request to the FAA. The request must be sent to the FSDO having jurisdiction over the area in which the applicant is located and the applicant must be able to meet the requirements identified in FAR Section 91.409(d).

(ii) Large airplanes, turbojet multiengine airplanes, turbopropeller-powered multiengine airplanes, and turbine-powered rotorcraft must have a program approved that meets the requirements of FAR Section 91.409(e).

(4) All maintenance and required inspections must have been completed by a person authorized under FAR Sections 43.3 and 43.7. Additionally, the maintenance and inspections performed must be recorded in accordance with FAR Sections 43.9 and 43.11. FAR Part 43 prescribes the rules governing the maintenance, preventive maintenance, rebuilding, and alteration of civil U.S.-registered aircraft.

(5) Any alterations to the aircraft must have been accomplished and returned to service by an appropriately certified and authorized person under FAR Part 43.

(6) Aircraft operations for compensation or hire must be performed in accordance with the appropriate Air Operations Certificate, e.g., FAR Parts 125, 135, etc.

b. *Type Certification.* Prior to airworthiness certification, the type design must be certificated by the FAA. Section 603(c) of the Federal Aviation Act of 1958 makes a type certificate a prerequisite for issuance of airworthiness certificates. Each government operator who wishes to determine the eligibility of its aircraft for civil operations must contact the responsible geographic Aircraft Certification Office (ACO) for assistance in seeking either:

(1) design approval for aircraft that have been type certificated in the past; or

(2) type certification approval of aircraft that have been operated in the past under public aircraft status without a type certificate.

c. *Aircraft Previously Type Certificated.* If the aircraft was originally built to an FAA type certificate, the Aircraft Certification Office will review the type certificate data and make a comparison with the aircraft's current design and condition.

(1) the applicant should provide the FAA Aircraft Certification Office with the technical information to assist in the following:

(i) a review of type design for any engineering changes or modifications;

(ii) a review of replacement parts and technical data on the replacement parts;

(iii) a review of applicable Airworthiness Directives (AD);

(iv) a review of previous operating regimes;

(v) if needed, application of later regulatory amendments or special conditions for any changes found necessary to establish current airworthiness standards for safe design.

(2) The applicant must provide accurate records of any changes from the approved type design that are necessary to establish the current design. The applicant should update all maintenance manuals as necessary. If there has been a substantial change in the type design, e.g., in the configuration, power, power limitations, speed limitations, or weight that have proven so extensive that a substantially complete investigation of compliance with the applicable regulations is required, the owner will be required to apply for a new type certificate.

d. *Aircraft with No Prior Certification.* It will be extremely difficult to obtain type certification of aircraft that have no history of civil certification. However, if a government operator wishes to apply for type certification, it should file an application for a type certificate on FAA Form 8110.12. The applicant must submit the application and all type design data for the aircraft, including the aircraft's engines and propellers, to the Aircraft Certification Office in its geographic area for approval. The application form must be accompanied by a three-view drawing and available basic data so that a preliminary regulatory certification basis may be established. The applicable airworthiness certification regulations, i.e., FAR Part 23, 25, 27, 29, 33, 35, etc., will be those that are in effect on the date of application for the certificate, unless otherwise noted in the regulations. The applicant must submit the type design, test reports, and computations necessary to show that the product to be certificated meets the applicable airworthiness, aircraft noise, fuel venting, and exhaust emission requirements of the FAR. Upon examining the data and test reports, participating in testing, and inspecting the prototype aircraft, the Administrator must be able to find that the type design in fact complies with the above-mentioned regulations.

e. *Airworthiness Certification.* An operator of an aircraft that has been operated in public aircraft status cannot obtain a standard airworthiness certificate or return the aircraft to civil operations without showing that the aircraft meets all the criteria for that airworthiness certificate as prescribed by the regulations. Making that showing may be difficult when the aircraft has not been maintained, altered, or inspected in accordance with the FAR. In order to receive a standard airworthiness certificate, the operator should show that the aircraft has been maintained according to the manufacturer's instructions, and that any modifications to the aircraft either were removed or approved by the FAA. Before a standard airworthiness certificate can be issued, the applicant must show that:

(1) The aircraft conforms to its approved type design and is in condition for safe operation.

(2) Any alterations were accomplished in accordance with an approved supplemental type certificate (STC) or other FAA approved data, such as a field approval as reflected by the issuance of an FAA Form 337, Major Repair of Alteration.

(3) All applicable AD's have been complied with.

(4) If altered while in another category, the aircraft continues to meet, or has been returned to, its approved type design configuration and is in a condition for safe operation.

f. *Procedures for Obtaining Certificate.* Applicants interested in obtaining an airworthiness certificate must follow the following procedures.

(1) Applicants are required to submit a properly executed Application for Airworthiness, FAA Form 8130–6, and any other documents called for in FAR Parts 21 and 45 for certification. An applicant may obtain an FAA Form 8130–6, ''Application for Airworthiness'' from the local Manufacturing Inspection district office (MIDO) or FSDO. The applicant must have completed and signed the appropriate sections prior to submitting it to the FAA.

(2) The applicant is required to make available for inspection and review the aircraft, aircraft records, and any other data necessary to establish conformity to its type design.

(3) The applicant must properly register the aircraft in accordance with FAR Part 47, Aircraft Registration.

(4) The applicant is also required to show that the aircraft complies with the noise standards of FAR Sections

21.93(b), 21.183(e), Part 36, or Part 91, as appropriate. This may be demonstrated through the use of data. Also, the applicant is required to show that the aircraft's fuel venting and exhaust emission systems comply with the requirements of FAR Part 34. In addition, the applicant must show the aircraft meets the applicable passenger emergency exit requirements of FAR Section 21.183(f) and SFAR No. 41.

(5) During the course of the certification process, the FAA will review records and documentation to the extent necessary to establish that:

(i) All of the required records and documentation are provided for the aircraft, i.e., an up-to-date approved flight manual, a current weight and balance report, equipment list, maintenance records, FAA-accepted Instructions for Continued Airworthiness (ICAW) and/or FAA-acceptance maintenance manual(s) (MM), and any other manuals required by FAR Sections 21.31, 21.50, 23.1529, 25.1529, 27.1529, 29.1529, 33.4, and 35.4. These documents must be in the English language.

(ii) The applicant should ensure that the appropriate markings are present in accordance with FAR Part 45. The applicant should make available the Type Certificate Data Sheets (TCDS), aircraft specification, or aircraft listing that is applicable.

(iii) The inspection records and technical data should reflect that the aircraft conforms to the type design, and all required inspections, including those provided for in FAR Section 21.183(d)(2), which provides for a 100-hour inspection, as described in FAR Section 43.15 and Appendix D. The applicant must also show that the tests the aircraft has been subjected to have been satisfactorily completed, the records completed, and reflect no unapproved design changes.

(iv) The aircraft has been flight tested, if required. If it has not been flight tested, the FAA may issue a special airworthiness certificate as provided for in FAR Sections 21.35 and 21.191(b). The flight test must be recorded in the aircraft records in accordance with FAR Section 91.417(a)(2)(i) as time in service as defined in FAR Part 1. Aircraft assembled by a person other than the manufacturer (e.g., a dealer or distributor) must have been assembled and, when applicable, flight tested in accordance with the manufacturer's FAA-approved procedures.

(v) Large airplanes, turbojet, or turbopropeller multi-engined airplanes must comply with the inspection program requirements of Subpart C of FAR Part 91 or other FAR referenced therein. A supplemental structural inspection program is also required for certain large transport category airplanes. Reference AC 91–56, Supplemental Structural Inspection Program for Large Transport Category Airplanes.

(6) Inspection of the aircraft. Aircraft submitted by the applicant for inspection will be inspected for the following:

(i) The nationality and registration marks and identification plate should be displayed and marked in accordance with FAR Part 45. The information presented should agree with the application for airworthiness certification.

(ii) All equipment, both required and optional, should be properly installed and listed in the aircraft equipment list.

(iii) Instruments and placards should be located in the appropriate places, installed, and properly marked in the English language.

(iv) All applicable AD's must have been complied with and appropriately recorded.

(v) The aircraft should conform to its approved U.S. type certificate and should be in a condition for safe operation.

(vi) All aircraft systems should have been satisfactorily checked for proper operation. The operation of the engine(s) and propeller(s) should be checked in accordance with the aircraft manufacturer's instructions.

Chapter 3. Applying for an Exemption

6. Administrator's Exemption Authority

a. *In General*. The FAA Administrator has the authority to grant exemptions, provided certain requirements are met, to units of government for operations that do not have public aircraft status. The Independent Safety Board Act Amendments of 1994, Pub. L. 103–411, provide, in pertinent part:

(1) Authority To Grant Exemptions

(i) In General. The Administrator of the Federal Aviation Administration may grant an exemption to any unit of Federal, State, or local government from any requirement of part A of subtitle VII of title 49, United States Code, that would otherwise be applicable to current or future aircraft of such unit of government as a result of the amendment made by subsection (a) of this section (the revised ''public aircraft'' definition).

Note: The above provision authorizes exemptions from the United States Code—specifically, the Federal Aviation Act of 1958, as amended and recodified—rather than from the regulations.

b. *Statutory Requirements*. The statute provides as follows:

(1) The Administrator may grant an exemption [to a unit of government] . . . only if—

(i) the Administrator finds that granting the exemption is necessary to prevent an undue economic burden on the unit of government and

(ii) the Administrator certifies that the aviation safety program of the unit of government is effective and appropriate to ensure safe operations of the type of aircraft operated by the unit of government.

Independent Safety Board Act Amendments of 1994, Section (b)(2), Pub. L. 103–411 (emphasis added).

Note: The FAA intends to grant exemptions only where it is clearly in the public interest to do so.

c. *Delegation of Authority*. In the interest of administrative efficiency, the Administrator's authority to grant exemptions to units of government has been delegated to the Director, Flight Standards Service, and the Director, Aircraft Certification Service. FAR Section 11.25(b)6).

7. Key Statutory Terms

a. ''*The Administrator Finds . . . and . . . Certifies*.'' This language indicates that the Administrator, or his or her delegate, is to make an independent determination as to whether the statutory requirements for granting an exemption have been met. This is in contrast to an earlier portion of the statute in which the *unit of government* rather than the Administrator makes the required certifications (that the operation was necessary to respond to a significant and imminent threat, and that no private operator was reasonably available to meet the threat).

b. ''*Undue Economic Burden*.'' One finding that the Administrator or his or her delegate must make before granting an exemption is that the exemption is necessary to prevent an undue economic burden on the unit of government. ''Undue economic burden'' means that it would cost substantially more to comply with FAA regulations than with ''an aviation safety program that is effective and appropriate to ensure safe operations of the type of aircraft operated by the unit of government'' under the statute's exemption provision. To show ''substantial additional costs,'' a petitioner for exemption should submit information that will allow the FAA to compare the cost of operating in compliance with Part A of Subtitle VII of Title 49 of the United States Code with comparable costs if an exemption

were granted. At minimum, such information should include:

(1) The purpose and duration of the aircraft operations for which exemption is sought.

(2) The estimated initial and recurring costs of bringing the petitioner's aircraft operations into compliance with civil aircraft requirements.

(3) The estimated costs associated with conducting comparable aircraft operations under the exemption.

(4) The estimated cost of obtaining the same aircraft operations from a private operator.

c. ''*Aviation Safety Program*.'' The Administrator or the Administrator's delegate may not grant an exemption to a unit of government without certifying that the aviation safety program of the unit of government is ''effective and appropriate to ensure safe operations of the type of aircraft operated by the unit of government.'' As a result, in the petition for an exemption, the petitioner must show to the Administrator's satisfaction that the petitioner's aviation safety program is effective and appropriate to ensure safe operations of the type of aircraft operated by the petitioner.

(1) An aviation safety program submitted for approval must specify how the aircraft will be maintained and operated safely. The program must include:

(i) procedures covering the maintenance and inspection of the aircraft, including the avionics equipment, emergency equipment, aircraft interior modifications;

(ii) installation, removal, and inspection instructions for all special equipment on or modifications of specific aircraft;

(iii) procedures for operating the aircraft, personnel training associated with the aircraft; and

(iv) any other procedures determined to be necessary for the safe operation of the aircraft.

(2) Example: A unit of government applies for an exemption on an aircraft whose wings were modified to carry external pods for various surveillance activities. In its proposed aviation safety program, the unit of government would need to identify how the continued airworthiness of the modification will be accomplished. At minimum, the following may be required: a special structural inspection at the wing attach points, additional training for pilots operating the aircraft during pod installations, and flight manual changes to reflect any new operating limitations that may be necessary due to the modifications.

d. *Aircraft Ineligible for Airworthiness Certificates*. It will be extremely difficult for units of government to show that aircraft ineligible for airworthiness certificates—e.g., military surplus aircraft—have ''an aviation safety program that is effective and appropriate to ensure safe operations of the type of aircraft operated by the unit of government.'' In order to meet the ''aviation safety program'' requirement, the public must be assured that the safety of the aircraft in question is at least roughly equivalent to that provided by the FAR. Aircraft that have no history of civil certification often present significant ''unknowns'' when it comes to such critical safety matters as life-limited parts and aircraft design. Thus, such aircraft do not usually have the needed base on which to build an aviation safety program that is effective and appropriate to ensure safe operations.

(1) The FAA does not now expect to grant exemptions for aircraft that are ineligible for airworthiness certificates. Units of government may apply for an exemption, but they should be aware of the limited likelihood of obtaining and exemption for such aircraft, particularly when deciding whether to expend their resources in seeking an exemption. While the FAA will not rule out completely the possibility of granting exemptions for such aircraft, the burden on the petitioner of showing that safety will not be jeopardized will be very heavy indeed.

(2) A successful petitioner for an exemption would need to show that its aviation safety program is at least roughly equivalent in terms of level of safety what is required by the operations, maintenance, and inspection requirements of the FAR.

(3)A unit of government developing a proposal for an aviation safety program may find the information below helpful:

(i) *Generally*. Subpart E of FAR Part 91 prescribes the rules governing the maintenance, preventative maintenance, and alterations of U.S.-registered aircraft civil aircraft operating within and outside the United States. FAR Section 91.403 states that the owner or operator of an aircraft is primarily responsible for maintaining that aircraft in an airworthy condition, including compliance with FAR Part 39. FAR Part 39 describes the requirements for compliance to AD's issued by the FAA.

(ii) *Inspection Programs*. Operators of large aircraft, turbojet multiengine airplanes, or turbopropeller powered multiengine airplanes, should select and use one of the four inspection program options outlined in FAR Sections 91.409(e) and (f).

(A) For one of the four inspection program options, that identified in FAR Section 91.409(f)(4), the inspection program submitted should be compared with the manufacturer's recommended program. Where there is no manufacturer's program, a time-tested program should be utilized. The program developed must provide a level of safety equivalent to or greater than that provided by the other inspection options identified in FAR Section 91.409(f).

(B) For the other three inspection options outlined in FAR Sections 91.409(e) and (f), the basis for the development of the inspection program or the instructions for continued airworthiness, including the detail of the parts and areas of the airplane to be inspected, is the manufacturer's recommendations. In the case of surplus military aircraft, the manufacturers provide this basic information to the specific military service that has contracted for the airplane. The military service then develops a reliability-centered maintenance program to meet its needs and environment which are often comparable to the continuous airworthiness maintenance programs developed by air carriers.

(C) In many cases, manufacturers may be unwilling or unable to provide instructions for continued airworthiness for operation of the airplane in other than a military environment. Therefore, in keeping with existing policy as provided by the FAA, the only reasonable basis that for detailing the inspection criteria for the aircraft to be inspected, as required by FAR Section 91.409(g)(1), is the scope and detail developed by the applicable military service.

(D) In addition to the ''field'' level inspection requirements set forth in the military maintenance program, the ''depot'' level inspection requirements should also be included in any inspection program approved under FAR Section 91.409(f)(4). The military ''field'' level maintenance is roughly equivalent to the civil terminology that air carriers use to describe ''A, B or C'' checks. The military ''depot'' level maintenance is comparable to the ''heavy C or D'' checks used by air carriers. Some air carriers may use a numerical description verses the alphabetical identifier for inspection checks.

(E) The inspection frequency and program structure established by the military may not be appropriate for use in a civilian environment. Therefore, inspection frequency and program structure may require adjustment to meet the government operator's

requirement. However, facts and sound judgment must form the basis for any inspection frequency adjustment beyond that which has been established for use by the military.

(F) An alternate means of compliance for individual specific inspection requirements, in lieu of that which is called for in the military ''field'' or ''depot'' level programs, may be approved following evaluation of the applicant's inspection process instructions.

(G) Revisions to an existing approved inspection program should be requested in accordance with FAR Section 91.415.

(iii) *Persons Conducting Inspections and Maintenance.* The program proposed by the petitioner should include procedures to insure that inspections and maintenance tasks are performed by persons authorized by FAR Sections 43.5 and 43.7.

(iv) *Modifications and Repairs.* The program must identify all major modifications and repairs accomplished since the aircraft was put into service. Additionally, all further modifications and major repairs will need to be approved in the same format as required for civil aircraft under the regulations.

8. Petition for Exemption

a. *Procedure.* FAR Section 11.25—contains the procedures to be followed by a unit of government seeking an exemption. The petition for exemption should be submitted in duplicate to the Rules Docket (AGC–10), Federal Aviation Administration, 800 Independence Avenue, Washington, DC 20591. Under FAR Part 11, petitions for exemption are published in the **Federal Register** for notice and comment period.

b. *Contents.* The petition for exemption must set forth the text or substance of the statute from which the exemption is sought. (As noted above, Congress authorized exemptions from the statute—the Federal Aviation Act of 1958, as amended and recodified—rather than from the regulations.) The petition for exemption must contain any information, views, analysis, or arguments available to the petitioner to show that the statutory requirements for granting an exemption have been met—i.e.:

(1) that the exemption is necessary to prevent an undue economic burden on the unit of government; and

(2) that the aviation safety program of the unit of government is effective and appropriate to ensure safe operations of the type of aircraft operated by the unit of government. FAR Section 11.25. Individuals drafting a petition for exemption on behalf of a unit of government should familiarize themselves with FAR Part 11.

[FR Doc. 95–1919 Filed 1–20–95; 4:26 pm]

BILLING CODE 4910–13–M

National Highway Traffic Safety Administration

[Docket No. 94–92; Notice 2]

Decision That Nonconforming 1972 and 1973 Ferrari Daytona 365 GTB/4 Passenger Cars Are Eligible for Importation

AGENCY: National Highway Traffic Safety Administration (NHTSA), DOT.

ACTION: Notice of decision by NHTSA that nonconforming 1972 and 1973 Ferrari Daytona 365 GTB/4 passenger cars are eligible for importation.

SUMMARY: This notice announces the decision by NHTSA that 1972 and 1973 Ferrari Daytona 365 GTB/4 passenger cars not originally manufactured to comply with all applicable Federal motor vehicle safety standards are eligible for importation into the United States because they are substantially similar to vehicles originally manufactured for importation into and sale in the United States and certified by their manufacturer as complying with the safety standards (the U.S.-certified versions of the 1972 and 1973 Ferrari Daytona 365 GTB/4), and they are capable of being readily altered to conform to the standards.

DATES: This decision is effective as of January 26, 1995.

FOR FURTHER INFORMATION CONTACT: Ted Bayler, Office of Vehicle Safety Compliance, NHTSA (202)–366–5306).

SUPPLEMENTARY INFORMATION:

Background

Under 49 U.S.C. § 30141(a)(1)(A) (formerly section 108(c)(3)(A)(i) of the National Traffic and Motor Vehicle Safety Act (the Act)), a motor vehicle that was not originally manufactured to conform to all applicable Federal motor vehicle safety standards shall be refused admission into the United States unless NHTSA has decided that the motor vehicle is substantially similar to a motor vehicle originally manufactured for importation into and sale in the United States, certified under 49 U.S.C. § 30115 (formerly section 114 of the Act), and of the same model year as the model of the motor vehicle to be compared, and is capable of being readily altered to conform to all applicable Federal motor vehicle safety standards.

Petitions for eligibility decisions may be submitted by either manufacturers or importers who have registered with NHTSA pursuant to 49 CFR Part 592. As specified in 49 CFR 593.7, NHTSA publishes notice in the **Federal Register** of each petition that it receives, and affords interested persons an opportunity to comment on the petition. At the close of the comment period, NHTSA decides, on the basis of the petition and any comments that it has received, whether the vehicle is eligible for importation. The agency then publishes this decision in the **Federal Register**.

J.K. Motors, Inc. of Kingsville, Maryland (Registered Importer R–90–006) petitioned NHTSA to decide whether 1972 and 1973 Ferrari Daytona 365 GTB/4 passenger cars are eligible for importation into the United States. NHTSA published notice of the petition on November 16, 1994 (59 FR 59274) to afford an opportunity for public comment. The reader is referred to that notice for a thorough description of the petition.

One comment was received in response to the notice of the petition, from Fiat Auto U.S.A., Inc. (Fiat), the United States representative of Ferrari. In its comment, Fiat stated that Ferrari, and other companies within the Fiat Group, have invested considerable resources in the design and production of vehicles that comply with the Federal motor vehicle safety standards. Although it stated that it has not determined what modifications are necessary to bring a vehicle into compliance with the Federal safety standards, Fiat contended that it is not possible to achieve such compliance by simply retrofitting a vehicle built for the European market, without conducting extensive development and testing.

Because Fiat's comments did not specify how non-U.S. certified 1972 and 1973 Ferrari Daytona 365 GTB/4 passenger cars are incapable of being readily altered to conform to the standards, there was no basis for NHTSA to solicit a response from J.K. As they have been performed with relative ease on thousands of vehicles imported over the years, none of the modifications described in the petition would preclude NHTSA from determining that non-U.S. certified 1972 and 1973 Ferrari Daytona 365 GTB/4 passenger cars are eligible for importation. NHTSA has accordingly decided to grant the petition.

Vehicle Eligibility Number for Subject Vehicles

The importer of a vehicle admissible under any final decision must indicate

on the form HS–7 accompanying entry the appropriate vehicle eligibility number indicating that the vehicle is eligible for entry. VSP 100 is the vehicle eligibility number assigned to vehicles admissible under this decision.

Final Determination

Accordingly, on the basis of the foregoing, NHTSA hereby decides that 1972 and 1973 Ferrari Daytona 365 GTB/4 passenger cars not originally manufactured to comply with all applicable Federal motor vehicle safety standards are substantially similar to 1972 and 1973 Ferrari Daytona 365 GTB/4 passenger cars originally manufactured for importation into and sale in the United States and certified under 49 U.S.C. § 30115, and are capable of being readily altered to conform to all applicable Federal motor vehicle safety standards.

Authority: 49 U.S.C. 30141(a)(2)(A) and (b)(1); 49 CFR 593.8; delegations of authority at 49 CFR 1.50 and 501.8.

Issued on: January 20, 1995.

William A. Boehly,

Associate Administrator for Enforcement.

[FR Doc. 95–1939 Filed 1–25–95; 8:45 am]

BILLING CODE 4910–59–M

UNITED STATES INFORMATION AGENCY

1995 Central and Eastern European Graduate Fellowships

ACTION: Notice; request for proposals.

SUMMARY: The Office of Academic Programs of the United States Information Agency's Bureau of Education and Cultural Affairs announces an open competition for an assistance award. American public or private non-profit organizations meeting the provisions described in IRS regulation 501(c)(3) may apply to administer the FY 1995 Central and Eastern European Graduate Fellowships. Only organizations with at least four years of experience in international exchange activities are eligible to apply. Preference will be given to organizations that have placement experience at the graduate level and/or mid-career professionals and a demonstrated ability to conduct academic exchange programs in Central and Eastern Europe. Organizations are invited to submit a proposal with a budget not to exceed $1,850,000 to conduct the final selection (from a pool of applicants), placement, and monitoring of 40 Fellows from the following countries: Albania (4), Bulgaria (4), Croatia (2), Hungary (7), Macedonia (2), Poland (12), Romania (5), and Slovenia (4). Participants will be enrolled in two-year degree programs, or in one-year non-degree professional development programs (except for the one-year degree programs in law) at accredited U.S. academic institutions for study at the Masters' level in the fields of business administration, education administration, economics, law, public policy, communication/journalism and public administration.

Please note: This program is not intended to support PhD studies.

Overall grant making authority for this program is contained in the Mutual Educational and Cultural Exchange Act of 1961, Public Law 87–256, as amended, also known as the Fulbright-Hays Act. The purpose of the Act is ''to enable the Government of the United States to increase mutual understanding between the people of the United States and the people of other countries * * *; to strengthen the ties which unite us with other nations by demonstrating the educational and cultural interests, developments, and achievements of the people of the United States and other nations * * * and thus to assist in the development of friendly, sympathetic and peaceful relations between the United States and the other countries of the world.''

The funding authority for the program cited above is provided through the Support for East European Democracies Act (SEED). Programs and projects must conform with Agency requirements and guidelines outlined in the Solicitation Package. USIA projects and programs are subject to the availability of funds.

ANNOUNCEMENT NAME AND NUMBER: All communications with USIA concerning this announcement should refer to the above title and reference number E/AEE–95–09.

DATES: *Deadline for proposals:* All copies must be received at the U.S. Information Agency by 5 p.m. Washington, D.C. time on Monday, March 1, 1995. Faxed documents will not be accepted, nor will documents postmarked on March 1, 1995, but received at a later date. It is the responsibility of each applicant to ensure that proposals are received by the above deadline.

FOR FURTHER INFORMATION CONTACT: Ms. Effie Wingate or Mr. Steve Lebens, European Branch, Academic Exchanges Division, E/AEE Room 246, U.S. Information Agency, 301 4th Street, S.W., Washington, D.C. 20547. Telephone: (202) 205–0525, Fax: (202) 260–7985, Internet: TREED@USIA.GOV to request a Solicitation Package. The package includes more detailed award criteria; all application forms; and guidelines for preparing proposals, including specific criteria for preparation of the proposal budget. Please specify USIA Program Officer, Ms. Effie Wingate, on all inquiries and correspondences. Interested applicants should read the complete **Federal Register** announcement before addressing inquiries to the European Branch or submitting their proposals. Once the RFP deadline has passed, the European Branch may not discuss this competition in any way with applicants until the Bureau proposal review process has been completed.

ADDRESSES: Applicants must follow all instructions given in the Solicitation Package and send one original and nine copies of the completed applications, including required forms, to: U.S. Information Agency, Ref.: E/AEE–95–09, Office of Grants Management, E/XE, Room 336, 301 4th Street, S.W., Washington, D.C. 20547.

SUPPLEMENTARY INFORMATION: Pursuant to the Bureau's authorizing legislation, programs must maintain a non-political character and should be balanced and representative of the diversity of American political, social, and cultural life. ''Diversity'' should be interpreted in the broadest sense and encompass differences including but not limited to race, gender, religion, geographic location, socio-economic status, and physical challenges. Applicants are strongly encouraged to adhere to the advancement of this principle.

Overview

The FY 1995 Central and Eastern European Graduate Fellowships (CEEGF) will fund 40 Fellowships allocated as follows: Albania 4, Bulgaria 4, Croatia 2, Hungary 7, Macedonia 2, Poland 12, Romania 5, and Slovenia 4. Proposals must adhere to the stated country allocations. The goal of the CEEGF program is to provide an opportunity for selected university graduates and young professionals from the aforementioned eight European countries to participate in quality graduate study programs in the fields of business administration, education administration, economics, law, public policy, communication/journalism, and public administration at accredited universities throughout the United States. Fellowships will be awarded for one-year, non-degree professional development programs, except for one-year degree programs in law, or for two two-year degree granting programs. Program enhancements such as a Washington workshop, re-entry

institute, professional enrichment activities, alumni networking, etc. are encouraged. Internships of up to six months for Fellows in one-year programs and up to three months for Fellows in two-year programs are recommended. USIA's goal for 1995 is to award the greater number of Fellowships for two-year degree programs, and to attain equitable representation among the seven eligible fields while achieving wide distribution among the U.S. host universities. Clustering of Fellows should be avoided with no more than three Fellows at one university.

The Central and Eastern European Graduate Fellowships program will not support PhD programs.

Guidelines

For 1995, program advertisement and participant recruitment will be the responsibility of the United States Information Service (USIS) Posts and/or the Fulbright Commissions. USIS Posts and/or Commissions will screen applications for eligibility, arrange for testing where possible, conduct personal interviews, and compile a dossier on each qualified applicant. Each USIS Post and/or Commission will compile a pool of applicants to be forwarded to the administering organization(s) for the final selection. The duration of the program should be for two academic years, 1995–96 and 1996–97. The program may not begin before March 1, 1995, and must be completed by December 31, 1997.

Applicants are asked to develop a program plan to conduct the final selection, placement, monitoring and follow-on activities. Proposals should address and discuss in detail the following areas:

1. Final selection: describe in detail the process for the final selection of Fellows, including method of reviewing pool of applications, specific details about the applicant review committee(s), if relevant, and notification to selectees and non-selectees.

2. Placement of Fellows: describe criteria for selecting host-universities and measures to ensure participants academic and cultural needs are met.

3. Notification: describe plans for notifying applicants who have been selected for an award, including timely confirmation of placement, scheduling of pre-departure orientation, and logistics of all travel arrangements.

4. Special programs: describe provisions for ESL or pre-academic programs, if necessary;

5. Orientation: describe plans for pre-departure, post arrival and/or pre-academic orientation programs.

6. Enrichment activities: describe arrangements for cultural and professional development activities, internships, and other program enhancements including recommendations for Washington workshop and/or re-entry institute.

7. Monitoring/evaluation/tracking: describe methodologies for on-going monitoring and evaluation and adjustment of program accordingly. Mechanisms for alumni networking and alumni tracking should also be detailed.

8. Personnel: proposals should include curriculum vitae of personnel assigned to administer the CEEGF program.

Participants

Fellows will be drawn from a pool of applicants with a variety of professional and educational backgrounds. Since one of the purposes of the fellowships is to promote the development of professional expertise among the future leaders of Central Europe, grant recipients should ideally be in the early stages of their careers, with perhaps a few years of work experience, a demonstrated ability for leadership, a clearly expressed purpose for studying in the United States, and a commitment to return home at the end of their fellowships to share their knowledge and skills in the development of their countries. In every case fellows must be under the age of forty, possess the equivalent of a bachelors degree, and demonstrate fluency in spoken and written English (or the ability to attain such a level following a limited ESL program prior to the beginning of their studies).

Visa/Insurance/Tax Requirements

All foreign participants must be sponsored under an Exchange Visitor Program on a J visa. Programs must comply with J–1 visa regulations and should reference this adherence in the proposal narrative. CEEGF Fellows must comply with the two-year home residency requirement as stipulated by the J-visa guidelines. It is the expressed intent of this program that Fellows return immediately to their home country following completion of the academic and professional components of their program. Please refer to program specific guidelines in the Application Package for further details.

Administration of the program must be in compliance with reporting and withholding regulations for federal, state, and local taxes as applicable. Recipient organizations should demonstrate tax regulation adherence in the proposal narrative and budget.

Participants will be covered by USIA Health and Accident Insurance. The administering organization(s) will be responsible for enrolling the participants in the insurance program.

Cost Sharing

Cost-sharing is encouraged. Cost-sharing may be in the form of allowable direct or indirect costs. The recipient must maintain written records to support all allowable costs which are claimed as being its contribution to cost participation, as well as costs to be paid by the Federal government. Such records are subject to audit. The basis for determining the value of cash and in-kind contributions must be in accordance with OMB Circular A–110, Attachment E—Cost-sharing and matching should be described in the proposal. In the event the recipient does not provide the minimum amount of cost-sharing as stipulated in the recipient's budget, the Agency's contribution will be reduced in proportion to the recipient's contribution.

Audits

The recipient's proposal shall include the cost of an audit that:

(1) Complies with the requirements of OMB Circular No. A–133, Audits of Institutions of Higher Education and Other Nonprofit Institutions;

(2) complies with the requirements of American Institute of Certified Public Accountants (AICPA) Statement of Position (SOP) No. 92–9; and

(3) includes review by the recipient's independent auditor of a recipient-prepared supplemental schedule of indirect cost rate computation, if such a rate is being proposed.

The audit costs shall be identified separately for:

(1) Preparation of basic financial statements and other accounting services; and

(2) preparation of the supplemental reports and schedules required by OMB Circular no. A–133, AICPA SOP 92–9, and the review of the supplemental schedule of indirect cost rate computation.

Proposed Budget

Applicants are invited to submit a detailed budget for a grant not to exceed $1,850,000. The total institutional administrative costs, including indirect costs, funded by USIA may not exceed $370,000 or 20% (twenty percent) of the total request, whichever is less.

Proposals must include a comprehensive line item budget for the

entire program. There must be a summary budget as well as a break-down reflecting both the administrative budget and the program budget. Please refer to the application packet for complete formatting instructions.

USIA reserves the right to reduce, revise, or increase the proposal budget in accordance with the needs of the program.

Funding for all program and administrative costs for the entire period of the program should be projected in the proposal. The estimate should list all post-recruitment costs, including participant and administrative costs relating to selection, pre-departure orientation, and expenses for the entire U.S. component of the program, including supervision of Fellows. Please indicate the number of one year and two year placements you anticipate. USIA reserves the right to increase or decrease the number of participants as well as the budget for the project.

Medical insurance for participants will be paid directly by USIA and, therefore, should not be included as a line-item cost in the program budget. However, a modest line-item may be included for health insurance for universities not accepting the USIA policy.

Grant-funded items of expenditure may include, but are not limited to, the following categories:

Program Expenses

—Round trip travel to and from Fellows' home city to international point of departure (if applicable);
—Round trip international travel (via American carrier);
—Round trip U.S. travel to and from host institution;
—Tuition, room and board for academic program;
—Maximum of eight weeks of pre-academic English language training as required to achieve 550 TOEFL;
—Pre-academic program costs, including, but not limited to, room and board, instructional fees, additional staff costs, use of facilities (lab rentals), field trips, special events, guest lecturers, etc.;
—''Settling-in'' allowance (e.g., necessary clothing, linens, toiletries, etc.);
—Educational materials (not to exceed $1,000 per academic year);
—Maintenance including university vacation periods;
—Summer internship and school break maintenance costs (not to exceed $1,500 per month);
—Pre-departure orientation expenses;
—Per diem for orientation and professional, academic and cultural enrichment (not to exceed an average of $1,500 per Fellow);
—Domestic travel and per diem for a Washington Enhancement Workshop (approximately $1,000 per Fellow);
—Domestic travel, maintenance, and tuition for an end of program institute (approximately $1,000 per Fellow);
—Withholding for taxes; and
—Visa fees.

Administrative Costs

Administrative costs may include the following expenses:

—Staff salaries and benefits;
—Staff and academic panel travel relating to final selection and host campus selection;
—Staff travel for program monitoring;
—Communication costs (e.g. fax, telephone, postage, communication equipment, etc.);
—Office supplies;
—Administration of tax withholding and reporting as required by Federal, State, and local authorities and in accordance with relevant tax treaties;
—Other direct costs; and
—Indirect costs.

Please note: Identify by name and position the staff members of your organization that will be working on this program. USIA strongly encourages the adequate provision of personnel and resources to cover the administration of this program.

Review Process

USIA will acknowledge receipt of all proposals and will review them for technical eligibility. Proposals will be deemed ineligible if they do not fully adhere to the guidelines stated herein and in the Solicitation Package. Eligible proposals will be forwarded to panels of USIA officers for advisory review. All eligible proposals will be reviewed by the Agency contracts office, as well as the USIA Office of Eurasian Affairs and the USIS posts overseas, where appropriate. Proposals may also be reviewed by the Office of the General Counsel or by other Agency elements. Funding decisions are at the discretion of the USIA Associate Director for Educational and Cultural Affairs. Final technical authority for grant awards resides with the USIA grants officer.

Review Criteria

Technically eligible applications will be competitively reviewed according to the criteria stated below. These criteria are not rank ordered and all carry equal weight in the proposal evaluation:

1. Quality of the program: Proposals should exhibit thorough conception of the project, methods of meeting program and participant needs, and follow-on plan.

2. Program planning: Detailed agenda and relevant work plan should demonstrate substantive undertakings and logistical capacity. Agenda and plan should adhere to the program overview and guidelines described above.

3. Ability to achieve program objectives: Objections should be reasonable, feasible, and flexible. Proposals should clearly demonstrate how the organization will meet the program's objectives and plan.

4. Multiplier effect/impact: Proposed programs should strengthen long-term mutual understanding, including maximum sharing of information and establishment of long-term linkages.

5. Institutional Capacity: Proposed personnel and organizational resources should be adequate and appropriate to achieve the program or project goals.

6. Institution's record/Ability: Proposals should demonstrate an institutional record of successful exchange programs, including responsible fiscal management and full compliance with all reporting requirements for past Agency grants as determined by USIA's Office of Contracts. The Agency will consider the past performance of prior recipients and the demonstrated potential of new applicants.

7. Project Evaluation: Proposals should include a plan to evaluate the activity's success, both as the activities unfold and at the end of the program. USIA recommends that the proposal include a draft survey questionnaire or other technique plus description of a methodology to use to link outcomes to original project objectives. Award-receiving organization(s) will be expected to submit intermediate reports after each project component is concluded or quarterly, whichever is less frequent.

8. Cost-effectiveness: The overhead and administrative components of the proposal, including salaries and honoraria, should be kept as low as possible. All other items should be necessary and appropriate.

9. Cost-sharing: Proposals should maximize cost-sharing through other private sector support as well as institutional direct funding contributions.

10. Area expertise: Proposals should demonstrate the organization's expertise in Central and Eastern Europe and its experience with academic exchanges at the graduate level in these countries.

11. Placement experience: Proposals should demonstrate the organization's ability and experience with placements at U.S. universities at the graduate level.

12. Professional and academic contacts: Proposals should demonstrate

the organization's ability to use professional and academic contracts for internships, selection panels, etc.

Notice

The terms and conditions published in this RFP are binding and may not be modified by any USIA representative. Explanatory information provided by the Agency that contradicts published language will not be binding.

Issuance of the RFP does not constitute an award commitment on the part of the Government. The needs of the program may require the award to be reduced, revised, or increased. Final awards cannot be made until funds have been appropriated by Congress, allocated and committed through internal USIA procedures.

Notification

All applicants will be notified of the results of the review process on or about May 1, 1995. Awards made will be subject to periodic reporting and evaluation requirements.

Dated: January 18, 1995.

Dell Pendergrast,

Deputy Associate Director, Educational and Cultural Affairs.

[FR Doc. 95–1790 Filed 1–25–95; 8:45 am]

BILLING CODE 8230–01–M

DEPARTMENT OF VETERANS AFFAIRS

Loan Guaranty: Percentage To Determine Net Value

AGENCY: Department of Veterans Affairs.

ACTION: Notice.

SUMMARY: This notice provides information to participants in the Department of Veterans Affairs (VA) loan guaranty program concerning the percentage to be used in determining whether the Secretary will accept conveyance of a foreclosed property. The new percentage is 11.18 percent.

EFFECTIVE DATE: The new percentage is effective November 4, 1994.

FOR FURTHER INFORMATION CONTACT: Mr. Leonard A. Levy, Assistant Director for Loan Management (261), Loan Guaranty Service, Veterans Benefits Administration, Department of Veterans Affairs, 810 Vermont Avenue, NW., Washington, DC 20420. (202) 273–7344.

SUPPLEMENTARY INFORMATION: VA regulations concerning the payment of loan guaranty claims are set forth at 38 CFR 36.4300, et seq. The formulas for determining whether VA will offer the lender an election to convey the property to VA are set forth at 38 CFR 36.4320. A key component of this is the ''net value'' of the property to the Government, as defined in 38 CFR 36.4301. Essentially, ''net value'' is the fair market value of the property, minus the total of the costs the Secretary estimates would be incurred by VA resulting from the acquisition and disposition of the property for property taxes, assessments, liens, property maintenance, administration and resale. Each year VA reviews the average operating expenses incurred for properties acquired under 38 CFR 36.4320 which were sold during the preceding three fiscal years and the average administrative cost to the government associated with the property management activity. Administrative cost is based on the average holding time for properties sold during the preceding fiscal year. Property improvement expenses are estimated on an individual case basis at the time the net value is estimated. VA also includes in the net value calculation an amount equal to the gain or loss experienced by VA on the resale of acquired properties during the prior fiscal year. VA annually updates the ''net value'' percentage and publishes a notice of the new percentage in the **Federal Register**. For Fiscal Year 1994, the percentage was 11.19 percent. For Fiscal Year 1995, the percentage will be 11.18 percent, based upon the operating expenses incurred, exclusive of estimated property improvement expenses which are accounted for separately in each case, for Fiscal Years 1992, 1993, and 1994, and property resale experience for Fiscal Year 1994. Accordingly, VA will subtract 11.18 percent from the fair market value of the property to be foreclosed in order to arrive at the ''net value'' of the property to VA. This new percentage will be used in ''net value'' calculations made by VA on and after November 4, 1994. This is the date the new percentage was issued to VA field stations for use in these calculations.

Dated: January 17, 1995.

Jesse Brown,

Secretary of Veterans Affairs.

[FR Doc. 95–1991 Filed 1–25–95; 8:45 am]

BILLING CODE 8320–01–M

Sunshine Act Meetings

Federal Register

Vol. 60, No. 17

Thursday, January 26, 1995

This section of the FEDERAL REGISTER contains notices of meetings published under the "Government in the Sunshine Act" (Pub. L. 94-409) 5 U.S.C. 552b(e)(3).

FEDERAL ELECTION COMMISSION

DATE AND TIME: Tuesday, January 31, 1995 at 10:00 a.m.

PLACE: 999 E Street, NW., Washington, DC.

STATUS: This meeting will be closed to the public.

ITEMS TO BE DISCUSSED:

Compliance matters pursuant to 2 U.S.C. § 437g.

Audits conducted pursuant to 2 U.S.C. § 437g, § 438(b), and Title 26, U.S.C.

Matters concerning participation in civil actions or proceedings or arbitration

Internal personnel rules and procedures or matters affecting a particular employee

DATE AND TIME: Thursday, February 2, 1995 at 10:00 a.m.

PLACE: 999 E Street, NW., Washington, DC (ninth floor.)

STATUS: This meeting will be open to the public.

ITEMS TO BE DISCUSSED:

Correction and Approval of Minutes

Regulations:

Personal Use of Campaign Funds; Final Rules with Draft Explanation and Justification (11 CFR Parts, 100, 104 and 113)

Administrative Matters.

PERSON TO CONTACT FOR INFORMATION: Mr. Ron Harris, Press Officer, Telephone: (202) 219–4155.

Delores Hardy,

Administrative Assistant.

[FR Doc. 95–2119 Filed 1–24–95; 2:43 pm]

BILLING CODE 6715–01–M

Corrections

Federal Register
Vol. 60, No. 17
Thursday, January 26, 1995

This section of the FEDERAL REGISTER contains editorial corrections of previously published Presidential, Rule, Proposed Rule, and Notice documents. These corrections are prepared by the Office of the Federal Register. Agency prepared corrections are issued as signed documents and appear in the appropriate document categories elsewhere in the issue.

DEPARTMENT OF HEALTH AND HUMAN SERVICES

Food and Drug Administration

[Docket No. 94E–0099]

Determination of Regulatory Review Period for Purposes of Patent Extension; Netrexin™

Correction

In the correction of notice document 94–21280 appearing on page 50793 in the issue of Wednesday, October 5, 1994, in the third column, in the second line, ''fourth'' should read ''third''.

BILLING CODE 1505–01–D

OFFICE OF PERSONNEL MANAGEMENT

5 CFR Part 630

RIN 3206–AE95

Absence and Leave; Sick Leave

Correction

In rule document 94–29820 beginning on page 62266, in the issue of Friday, December 2, 1994, make the following corrections:

§ 630.201 [Corrected]

On page 62270, in the third column, in § 630.201(b), the second paragraph designated ''(b)'' should read ''(4)''.

BILLING CODE 1505–01–D

SECURITIES AND EXCHANGE COMMISSION

[Release No. 34-35111; File Nos. SR-BSE-94-16, SR-CBOE-94-52, SR-CHX-94-24, SR-CSE-94-10, SR-PHLX-94-68, SR-PSE-94-36]

Self-Regulatory Organizations; Notice of Filing and Order Granting Accelerated Approval to Proposed Rule Change by Boston Stock Exchange, Inc., Chicago Board Options Exchange, Incorporated, Chicago Stock Exchange, Incorporated, Cincinnati Stock Exchange, Inc., Philadelphia Stock Exchange, Inc., and Pacific Stock Exchange Incorporated Relating to the Listing of Securities Resulting from Limited Partnership Rollups

Correction

In notice document 94–31604 beginning on page 66388, in the issue of Friday, December 23, 1994, make the following correction:

On page 66389, in the third column, before the FR document line, the signature line was omitted and should have appeared as follows:

Margaret H. McFarland,

Deputy Secretary.

BILLING CODE 1505–01–D

SECURITIES AND EXCHANGE COMMISSION

[Release No. 34-35085; File No. SR-NYSE-94-41]

Self-Regulatory Organizations; Notice of Filing of Proposed Rule Change and Amendment No. 1 to Proposed Rule Change by the New York Stock Exchange, Inc., Relating to the Establishment of Uniform Listing and Trading Guidelines for Stock Index and Currency Warrants

Correction

In notice document 94–31205 beginning on page 65552, in the issue of Tuesday, December 20, 1994, make the following correction:

On page 65553, in the third column, before the FR document line, the signature line was omitted and should have appeared as follows:

Margaret H. McFarland,

Deputy Secretary.

BILLING CODE 1505–01–D

SECURITIES AND EXCHANGE COMMISSION

[Release No. 34–35171; File No. SR–NYSE–94–46]

Self-Regulatory Organizations; Notice of Filing of Proposed Rule Change by the New York Stock Exchange, Inc. Relating to Amendments to the New York Stock Exchange's Specialist Combination Review Policy

December 28, 1994

Correction

In notice document 95–232 beginning on page 1818 in the issue of Thursday, January 5, 1995, make the following correction:

On page 1820, in the first column, the ending paragraph before the signature line was omitted and should read as follows:

For the Commission, by the Division of Market Regulation, pursuant to delegated authority.

BILLING CODE 1505–01–D

SECURITIES AND EXCHANGE COMMISSION

[Release No. 34-35088; File No. SR-PSE 94-28]

Self-Regulatory Organizations; Notice of Filing of Proposed Rule Change and Amendment No. 1 to Proposed Rule Change by the Pacific Stock Exchange, Inc. Relating to the Establishment of Uniform Listing and Trading Guidelines for Stock Index and Currency Warrants

Correction

In notice document 94–31207 beginning on page 65554, in the issue of Tuesday, December 20, 1994, make the following correction:

On page 65556, in the second column, before the FR document line, the signature line was omitted and should have appeared as follows:

Margaret H. McFarland,

Deputy Secretary.

BILLING CODE 1505–01–D

SECURITIES AND EXCHANGE COMMISSION

[Release No. 34-35120; File No. SR-PSE-94-22]

Self-Regulatory Organizations; Pacific Stock Exchange, Inc.; Order Granting Approval to Proposed Rule Change Providing for the Execution of Cross Transactions on the PSE Equities Floors

Correction

In notice document 94–31674 beginning on page 66580, in the issue of Tuesday, December 27, 1994, make the following correction:

On page 66581, in the second column, before the FR document line, the signature line was omitted and should have appeared as follows:

Margaret H. McFarland,

Deputy Secretary.

BILLING CODE 1505–01–D

federal register

Thursday
January 26, 1995

Part II

Tennessee Valley Authority
18 CFR Part 1312

Department of Defense
32 CFR Part 229

Department of Agriculture
Forest Service
36 CFR Part 296

Department of the Interior
Office of the Secretary
43 CFR Part 7

Protection of Archaeological Resources; Uniform Regulations; Final Rule

TENNESSEE VALLEY AUTHORITY

18 CFR Part 1312

DEPARTMENT OF DEFENSE

32 CFR Part 229

DEPARTMENT OF AGRICULTURE

Forest Service

36 CFR Part 296

DEPARTMENT OF THE INTERIOR

Office of the Secretary

43 CFR Part 7

RIN 1024–AA51

Protection of Archaeological Resources; Uniform Regulations

AGENCIES: Departments of the Interior, Agriculture, and Defense and Tennessee Valley Authority.

ACTION: Final rule.

SUMMARY: This final rule revises the uniform regulations that implement the Archaeological Resources Protection Act of 1979 (ARPA) to incorporate the recent amendments. Principally, these changes amend the description of prohibited acts in the final uniform regulations to include attempt to excavate, remove, damage, or otherwise alter or deface archaeological resources, address the lower threshold for felony violations of ARPA, public awareness programs, archaeological surveys and schedules, the Secretary of the Interior's report to Congress about federal archeology, and guidance to Federal land managers about the disposition of Native American human remains and other ''cultural items'' as defined by the Native American Graves Protection and Repatriation Act (NAGPRA).

EFFECTIVE DATE: The final rule becomes effective February 27, 1995.

FOR FURTHER INFORMATION CONTACT: Francis P. McManamon, National Park Service, Department of the Interior, Washington, D.C., 202–343–4105; Lars Hanslin, Office of the Solicitor, Department of the Interior, Washington, D.C., 202–208–7957; Evan I. DeBloois, U.S. Forest Service, Department of Agriculture, Washington, D.C., 202–205–1754; Peter Walsh, Assistant Deputy Undersecretary of Defense for Environmental Quality, Department of Defense, Washington, D.C., 703–604–5753; or Bennett Graham, Tennessee Valley Authority, Norris, Tennessee, 615–632–1585.

SUPPLEMENTARY INFORMATION:

Background

This final rule revises the uniform regulations that implement the Archaeological Resources Protection Act of 1979 (ARPA; Pub. L. 96–95, as amended by Pub. L. 100–555, Pub. L. 100–588; 93 Stat. 721; 102 Stat. 2983; 16 U.S.C. 470aa–mm). It was prepared by representatives of the Secretaries of the Interior, Agriculture, and Defense, and the Chairman of the Board of the Tennessee Valley Authority, as directed in section 10(a) of the Act.

The first purpose of ARPA is ''to secure, for the present and future benefit of the American people, the protection of archaeological resources and sites which are on public lands and Indian lands'' [section 2(b)]. On November 3, 1988, amendments to ARPA were enacted which have the purpose ''to improve the protection and management of archaeological resources'' (Pub. L. 100–555) and ''to strengthen the enforcement provisions of ARPA'' (Pub. L. 100–588).

Section 10(a) of ARPA requires the Secretaries of the Interior, Agriculture, and Defense and the Chairman of the Tennessee Valley Authority, after consultation with other Federal land managers, Indian Tribes, representatives of concerned State agencies, and after public notice, to promulgate uniform regulations as may be appropriate to carry out the purposes of ARPA. The uniform regulations are to be promulgated after consideration of the provisions of the American Indian Religious Freedom Act (92 Stat. 469; 42 U.S.C. 1996). The uniform regulations for ARPA originally were published on January 6, 1984.

The six areas revised by this rulemaking include: (1) Expanding the description of prohibited acts to include attempts to excavate, remove, damage, or otherwise alter or deface archaeological resources, (2) adding the lower threshold provided for felony violations of ARPA, (3) adding public awareness programs, (4) adding archaeological surveys and schedules, (5) the Secretary of the Interior's report, and (6) providing guidance to Federal land managers about the disposition of Native American human remains and other ''cultural items'', as defined by NAGPRA [Pub. L. 101–601; 104 Stat. 3050; 25 U.S.C. 3001–13]. These topics are covered by adding paragraphs to §§ ____.3, ____.4, ____.7, ____.13, and ____.19; revising §§ ____.4 and ____.19; and adding new §§ ____.20 and ____.21.

(1) Expanding prohibited acts. The prohibited acts section of the uniform regulations is revised to conform to the recent amendments to ARPA. Federal land managers can pursue criminal and civil penalties against persons that *attempt* to excavate, remove, damage, alter, or otherwise deface archaeological resources.

(2) Lower felony threshold. Statutory amendments reduced the figure for distinguishing criminal penalties based upon calculations of damage to archaeological resources caused through violations of ARPA. The figure was reduced from $5,000.00 to $500.00. A new paragraph in § ____.4 restates the criminal penalties section in ARPA as well as incorporates the lower felony threshold in the uniform rule. This paragraph was added to the uniform regulations to inform Federal land managers about the criminal provisions of the Act. Those preparing the regulations felt that Federal land managers use the regulations, thus, it was important to restate the penalties section.

(3) Public awareness programs. New § ____.20 identifies the requirements in ARPA for Federal land managers to establish programs to increase public awareness about archaeological resource protection. Federal agencies are already developing public awareness programs. As examples, the Bureau of Land Management implemented the Heritage Education Program and the Forest Service developed Passports in Time. There were numerous other examples of public outreach efforts by field personnel from the land management agencies. The development of regulations defining the types of public awareness programs to be used by Federal land managers was not feasible. Rather, public awareness programs including volunteerism, formal education, interpretation, tourism, and others should be part of any archaeological resource activity and incorporated into other current programs where appropriate. The Secretary of the Interior will report to Congress about these programs on behalf of Federal agencies.

(4) Archaeological surveys and schedules. New § ____.21 discusses the requirements in ARPA for the Departments of the Interior, Agriculture, and Defense and the Tennessee Valley Authority to develop plans and schedules for surveying archaeological resources to determine their nature and extent for purposes of agency resource planning. The surveys should be conducted systematically and cover areas where the most scientifically valuable archaeological resources are likely to exist. For example, the surveys may focus on lands where there is little knowledge of the resource base, on

lands that contain archaeological resources that are vulnerable to vandalism and looting, or on lands that contain archaeological resources significant in local, state or regional cultural history. Other Federal land managing agencies are encouraged to develop such plans and schedules.

(5) The Secretary of the Interior's report. Section ____.19 is revised to enable the Secretary of the Interior to report comprehensively to Congress regarding Federal agencies archaeological activities. This section specifically addresses reporting on Federal agency public awareness programs, surveys and schedules and systems for documenting violations of ARPA.

(6) Treatments for Native American human remains and other ''cultural items''. Sections ____.3, ____.7 and ____.13 include guidance to Federal land managers on treatments for Native American human remains and other ''cultural items'', as defined by NAGPRA.

Finally, the reference to the U.S. Code is revised in § ____.1(a) and § ____.3(i) to reflect changes by the amendments to ARPA.

Public comment was sought for a 30-day period following publication of § ____.4 of the proposed rules on January, 29, 1990 (55 FR 2848), and for a 90-day period following publication of the remaining sections of the proposed rules on September, 11, 1991 (56 FR 46259). Written comments were received from seven Federal agencies, one State agency, three Indian councils and associations, one educational institution, two utility companies and associations, and one private cultural resources management firm. The authority citation for 43 CFR Part 7 was addressed in 2 comments, § 7.3 was addressed in 9 comments, § 7.7 was addressed in 9 comments, § 7.13 was addressed in 24 comments, § 7.19 was addressed in 3 comments, § 7.20 was addressed in 1 comment, and § 7.21 was addressed in 5 comments. The proposed rules were published immediately prior to the enactment of NAGPRA, and thus, many of the public comments focused on relationships between ARPA and NAGPRA.

Many comments were directed at the apparent inconsistencies between NAGPRA and ARPA regarding notification and consultation with Indian Tribes as well as the extent of Federal land managers' authority in making determinations of custody. Other comments were directed at further defining terms regarding types of land and archaeological objects. The remaining comments dealt with elaborating on the implementation and funding of reports, public awareness programs, and surveys and schedules.

All the comments were considered, and most contributed to some degree in the rulemaking process. All the comments and the changes made in response to public comments are discussed below.

Changes in Response to Public Comments

Two commentors noted that Pub. L. 101–601 (NAGPRA) should be included in the authority citation for 43 CFR Part 7. The authority for 43 CFR Part 7 is directed by Pub. L. 96–95; 93 Stat. 721, as amended; 102 Stat. 2983; 16 U.S.C. 470aa–mm (section 10(a)). Related authorities are those that ARPA influences, such as the Antiquity Act (16 U.S.C. 432,433), the Archeological and Historic Preservation Act (16 U.S.C. 469, as amended) and the National Historic Preservation Act (16 U.S.C. 470, as amended). The language in NAGPRA refers to the statute and its regulations but does not affect the implementation of ARPA and is not cited as a Related Authority. NAGPRA and its implementing regulations are referred to in the revisions of §§ ____.3, ____.7 and ____.13.

Section ____.3 Definitions

Two commentors noted that § ____.3(a)(6) of the uniform regulations, which states that Federal land managers may determine that particular human remains and directly associated material remains are to be treated differently from other archaeological resources, is in direct contradiction with NAGPRA which states that Native American human remains and graves must be treated differently from archaeological resources. One commentor noted that the definition of ''Indian lands'' in § ____.3(a)(5)(e) of the uniform regulations is different from the definition of ''tribal lands'' in NAGPRA, thus provisions in NAGPRA would cover graves on ''tribal lands'' as defined in NAGPRA but would not cover graves located on ''Indian lands'' as defined in the uniform regulations. This same commentor also noted that the uniform regulations, unlike NAGPRA, do not include: (1) Fee patented lands within the exterior boundaries of Indian reservations; (2) lands within dependent Indian communities that may not be in the boundaries of a reservation; and (3) certain lands administered for the benefit of Native Hawaiians. Three commentors noted that ''associated funerary objects'' as defined in NAGPRA should be used rather than the terms ''directly associated material remains'', ''associated objects'', and ''funerary objects'' in the uniform regulations. One of these same commentors also noted that the terms ''unassociated funerary objects'', ''sacred objects'' and ''objects of cultural patrimony'' should be added to the uniform regulations. Another of these three commentors above noted that the definition for ''human remains'' should be better defined in the uniform regulations.

The commentors are correct in observing that the definitions of certain terms vary between the uniform regulations and NAGPRA. The terms used in the final rule follow the statutory definitions provided in ARPA and its amendments. The terms ''associated funerary objects'', ''unassociated funerary objects'', ''sacred objects'', and ''objects of cultural patrimony'' have particular statutory meaning in NAGPRA but not in ARPA. ''Material remains'' is defined in ARPA, but not ''associated objects'' or ''funerary objects''. In response to comments concerning the consistency of this section with NAGPRA, the term ''cultural items'', as defined in NAGPRA, is used in the final rule to distinguish material remains that are to be treated under NAGPRA and its implementing regulations.

Section ____.7 Notification to Indian Tribes of Possible Harm to, or Destruction of, Sites on Public Lands Having Religious or Cultural Importance

One commentor noted that § ____.7(b)(4) of the uniform regulations is inconsistent with NAGPRA § 3(c) which requires consultation and consent from Indian tribes prior to the issuance of an ARPA permit, not after one has already been issued. Two commentors stated that it is redundant to consult with tribes after an ARPA permit has already been issued, especially if it is to comply with NAGPRA. One of these commentors stated that amendments to an ARPA permit are acceptable only under certain provisions, while the other commentor stated it was inappropriate altogether to develop compliance procedures through another act when the implementing regulations for NAGPRA have not been developed. One commentor noted that the requirement for notice to Indian tribes being at the discretion of the Federal land manager is not sufficient to carry out NAGPRA. One commentor noted that the uniform regulations should require notification to Indian tribes when aboriginal land is involved regardless of a finding of potential harm or destruction of religious or cultural

sites. This same commentor also noted that the uniform regulations should reflect requirements in NAGPRA that consultation, and not just notification, is required before excavation of imbedded materials.

Two commentors directed their comments at setting conditions for consultation. One of these commentors stated that it should identify protocols to be followed when special notice is necessary including specification of time periods for completion of a tribe's response following a notification. The other commentor stated that minimum standards should be established setting the ''extent of circumstances'' that call for optional circumstances. One commentor inquired how the uniform regulations apply to non-Native American human remains and if there were any provisions for notification to non-Native American groups.

Section ____.7(a) provides procedures for notification to Indian tribes and consultation 30 days prior to the issuance of a permit. Section ____.7(b) provides for Federal land managers and Indian tribes to cooperate in advance to identify sites of religious or cultural importance to prevent harm to them. Existing rules allow for the suspension or revocation of permits for management purposes, such as to insure consistency with NAGPRA. Also, ARPA requires consent from tribes when the permit applies to Indian lands. ARPA stipulates that Federal land managers shall seek to identify all Indian tribes having aboriginal or historic ties to the lands under their agency's jurisdiction. This section of the uniform regulations applies to sites on public lands having religious or cultural importance for Indian tribes. For cases involving non-Native Americans, the Federal land manager may consult with any concerned groups prior to permit issuance. In response to comments concerning the consistency of this section with NAGPRA, the final rule was modified to clarify the relationship of this section with NAGPRA.

Section ____.13 Custody of Archaeological Resources

Two commentors stated that § ____.13(a) should be amended to read that archaeological resources that are excavated or removed from pubic lands will remain the property of the United States ''except when lineal descendants have rights of ownership'' or ''except in those instances where NAGPRA recognizes ownership or control in a lineal descendent or Indian tribe'' in order to conform with NAGPRA. One of these same commentors noted that the Federal land manager is given too much power to decide the custody of items when no descendants can be identified and that NAGPRA has a resolution process, whereas, ARPA does not. This commentor also said that Federal land managers should be charged with identifying all aboriginal lands within their jurisdiction that meet the standards in NAGPRA and be instructed to defer decisions regarding custody to the appropriate tribe. Two commentors noted that § ____.13(e) should read that the Federal land manager *shall* determine, not *may* determine, that human remains and directly associated material remains need not be preserved and maintained in a scientific or educational institution. Seven commentors noted that the procedures for reaching a determination in § ____.13(e)(2) should be consistent with NAGPRA. One of these commentors noted that allowing Federal land managers alone to consider religious and cultural importance is inconsistent with NAGPRA, which reserves this right to Native American individuals and groups. Another of these commentors stated that while the uniform regulations allow Federal land managers the right to consider remains as a ''source of information about the past'', NAGPRA does not give this consideration. Another of these commentors stated that § ____.13(e)(2), in general, sets the context for allowing the study and curation of remains to be more important than repatriation. Three of these commentors stated that it needs to define conditions for applicability with regard to the disposition of human remains. Regarding § ____.13(e)(4), one commentor noted that NAGPRA provides the basis for reaching a determination of custody. Three commentors noted that the cancellation of the agreement by the Federal land manager over the tribe's failure to comply is contradictory to NAGPRA. Two commentors stated that there is a written agreement provision implied on activity pursuant to Section 106 of the National Historic Preservation Act, and that they were opposed to any process involving the Advisory Council or the SHPO. Another comment, regarding the same topic, suggested that written agreements should not rule out face-to-face communications. Two commentors stated that § ____.13(e)(4) appears to allow Federal land managers to impose ''appropriate terms and conditions'' to dictate the manner of repatriation, when tribal religious practices should govern, instead, and that this would be contrary to Section 3 of NAGPRA. Regarding § ____.13(e)(5), one commentor stated that it needs to explain how, when, and who determines the custody of ''remains'' during a criminal investigation. One commentor stated that § ____.13 needs to include procedures for custody of resources on Indian lands, not just public lands.

Federal land managers are ultimately responsible for archaeological resources under their agencies' jurisdictions. When Native American human remains and other ''cultural items'', as defined by NAGPRA, are returned to lineal descendants or culturally affiliated Indian tribes, then these items are no longer the responsibility of the United States. The claimants have complete authority over their future treatment. Archaeological resources excavated or removed from Indian lands remain the property of the Indian or Indian tribe having rights of ownership over such resources, and who, as stated in ARPA, determine the appropriate treatment. Under ARPA the Federal land manager will identify tribes with historic or aboriginal ties to the lands under the Federal land manager's jurisdiction and through consultation will determine if there are religious or cultural sites which could be harmed.

The commentors are correct in noting that the term ''when applicable'' is too general to provide useful guidance for the Federal land manager to consider the manner of disposition of the remains as proposed by the Indian tribe, group or individual. ARPA also is intended to enhance the protection of archaeological resources that are a source of information about the past. With regard to the custody of material remains during a criminal investigation, the status of archaeological resources is determined through law enforcement. Only when archaeological resources that are secured as evidence in a civil or criminal proceeding have been released officially by law enforcement, may they then be considered for treatment under this section. As for criminal proceedings involving Native American human remains and other ''cultural items'', as defined by NAGPRA, the Federal land manager is referred to the requirements in NAGPRA and its implementing regulations.

In response to the comments, the final rule includes guidance to Federal land managers about treatments of Native American human remains and other ''cultural items'', as defined by NAGPRA. Section____.13(e)(1)–(4) was deleted from the final rule. The Federal land manager is referred to the requirements in NAGPRA and its implementing regulations.

Section ____.19 Report

One commentor noted that a statistics-keeping requirement is the ''last thing Federal land managers need or want.'' Another commentor noted that ''available information'', in § ____.19(c), should be clarified with regard to information from active criminal cases. This same commentor also noted that regulations should be written by resource specialists, law enforcement personnel, and interpreters regarding the development of systems to report on violations and public awareness, and that any system so developed should be centralized and computerized.

The statutory requirements of ARPA require a report to Congress on the progress and effectiveness of public awareness programs and the surveys and schedules. Available information includes that which is available for public disclosure. If this information is part of active criminal investigations, then this information should be withheld until it can be released. The submitted information will be presented as part of the Secretary's Report to Congress. No modifications were made to the final rule based on these comments.

Section ____.20 Public Awareness Programs

One commentor noted that financial expenditures in this area will be wasted if NAGPRA is not taken into consideration since subsequent regulations could make this provision obsolete.

ARPA requires Federal land managers to establish public awareness programs. These programs can be very beneficial to furthering the protection of Native American graves. No modifications were made to the final rule based on these comments.

Section ____.21 /Surveys and Schedules

One commentor noted that this survey provision runs the risk of legitimizing unreliable ''probability models'' and that the discipline of archaeology is not in a position to identify and ''systematically cover areas where most scientific resources are likely to exist.'' This same commentor stated that the ''scientifically valuable'' criterion, in § ____.21(b), neglects other equally important cultural values and that the definition of ''scientifically valuable'' is subject to many changes over time. Two commentors noted that timetables or requirements should be set forth for developing and implementing survey plans since any agency can develop a schedule, but the need is to demonstrate agency commitments in time, funding and personnel. Another commentor, along the same lines, suggested that Congress should either set aside funds to pay for surveys or some other means for funding planned surveys should be developed.

This section promotes a comprehensive management program for the protection of archaeological resources. The intent is to direct agencies to learn more about the archaeological resource base using systematic approaches that can lead to better protection strategies. Scientifically valuable areas do not exclude sacred areas but focus on resources that will produce valuable information about regional cultural histories. Each agency is given the flexibility to determine plans for work based on funding and personnel levels that vary annually. The results and progress of such work are provided in the Secretary's Report to Congress along with appropriate recommendations.

Statement of Effects

This rule was not subject to Office of Management and Budget review under Executive Order 12866. The Department of the Interior certifies that this document will not have a significant economic effect on a substantial number of small entities under the Regulatory Flexibility Act (5 U.S.C. 601 *et. seq.*). These determinations are based on findings that the rulemaking is directed toward Federal resource management, with no economic impact on the public.

Paperwork Reduction Act

This rule does not contain information collection requirements which require approval by the Office of Management and Budget under 44 U.S.C. 3501 *et seq.*

List of Subjects

18 CFR Part 1312

Administrative practice and procedure, Historic preservation, Indians—lands, Penalties, Public lands.

32 CFR Part 229

Administrative practice and procedure, Historic preservation, Indians—lands, Penalties, Public lands.

36 CFR Part 296

Administrative practice and procedure, Historic preservation, Indians—lands, Penalties, Public lands.

43 CFR Part 7

Administrative practice and procedure, Historic preservation, Indians—lands, Penalties, Public lands.

Amendment

The Departments of the Interior, Agriculture, and Defense and the Tennessee Valley Authority are codifying identical amendments to the uniform regulations for protection of archaeological resources in their respective titles of the Code of Federal Regulations. Since the regulations are identical, the text of the amendments is set out only once at the end of this document.

Adoption of the Common Rule

The agency specific preambles adopting the text of the common rule appear below.

Tennessee Valley Authority

18 CFR Part 1312

As set forth in the common preamble, 18 CFR Part 1312 is amended as follows:

PART 1312—PROTECTION OF ARCHAEOLOGICAL RESOURCES: UNIFORM REGULATIONS

1. The authority citation for 18 CFR Part 1312 is revised to read as follows:

Authority: Pub. L. 96–95, 93 Stat. 721, as amended, 102 Stat. 2983 (16 U.S.C. 470aa–mm) (Sec. 10(a). Related Authority: Pub. L. 59–209, 34 Stat. 225 (16 U.S.C. 432, 433); Pub. L. 86–523, 74 Stat. 220, 221 (16 U.S.C. 469), as amended, 88 Stat. 174 (1974); Pub. L. 89–665, 80 Stat. 915 (16 U.S.C. 470a–t), as amended, 84 Stat. 204 (1970), 87 Stat. 139 (1973), 90 Stat. 1320 (1976), 92 Stat. 3467 (1978), 94 Stat. 2987 (1980); Pub. L. 95–341, 92 Stat. 469 (42 U.S.C. 1996).

2. In § 1312.1, the first sentence in paragraph (a) is revised to read as set forth at the end of this document.

3. In § 1312.3, paragraph (a)(6) is added and paragraph (i) is revised to read as set forth at the end of this document.

4. In § 1312.4, the section heading and paragraph (a) are revised and paragraph (c) is added to read as set forth at the end of this document.

5. In § 1312.7, paragraph (b)(4) is added to read as set forth at the end of this document.

6. In § 1312.13, paragraph (e) is added to read as set forth at the end of this document.

7. Section 1312.19 is revised to read as set forth at the end of this document.

8. New §§ 1312.20 and 1312.21 are added to read as set forth at the end of this document.

Craven Crowell,

Chairman, Tennessee Valley Authority.

Department of Defense

32 CFR Part 229

As set forth in the common preamble, 32 CFR Part 229 is amended as follows:

PART 229—PROTECTION OF ARCHAEOLOGICAL RESOURCES: UNIFORM REGULATIONS

1. The authority citation for 32 CFR Part 229 is revised to read as follows:

Authority: Pub. L. 96–95, 93 Stat. 721, as amended, 102 Stat. 2983 (16 U.S.C. 470aa–mm) (Sec. 10(a). Related Authority: Pub. L. 59–209, 34 Stat. 225 (16 U.S.C. 432, 433); Pub. L. 86–523, 74 Stat. 220, 221 (16 U.S.C. 469), as amended, 88 Stat. 174 (1974); Pub. L. 89–665, 80 Stat. 915 (16 U.S.C. 470a–t), as amended, 84 Stat. 204 (1970), 87 Stat. 139 (1973), 90 Stat. 1320 (1976), 92 Stat. 3467 (1978), 94 Stat. 2987 (1980); Pub. L. 95–341, 92 Stat. 469 (42 U.S.C. 1996).

2. In § 229.1, the first sentence in paragraph (a) is revised to read as set forth at the end of this document.

3. In § 229.3, paragraph (a)(6) is added and paragraph (i) is revised to read as set forth at the end of this document.

4. In § 229.4, the section heading and paragraph (a) are revised and paragraph (c) is added to read as set forth at the end of this document.

5. In § 229.7, paragraph (b)(4) is added to read as set forth at the end of this document.

6. In § 229.13, paragraph (e) is added to read as set forth at the end of this document.

7. Section 229.19 is revised to read as set forth at the end of this document.

8. New §§ 229.20 and 229.21 are added to read as set forth at the end of this document.

Dated: August 22, 1994.

Linda M. Bynum,

Alternate OSD Federal Register Liaison Officer, Department of Defense.

Department of Agriculture

Forest Service

36 CFR Part 296

As set forth in the common preamble, 36 CFR Part 296 is amended as follows:

PART 296—PROTECTION OF ARCHAEOLOGICAL RESOURCES: UNIFORM REGULATIONS

1. The authority citation for 36 CFR Part 296 is revised to read as follows:

Authority: Pub. L. 96–95, 93 Stat. 721, as amended, 102 Stat. 2983 (16 U.S.C. 470aa–mm)(Sec. 10(a). Related Authority: Pub. L. 59–209, 34 Stat. 225 (16 U.S.C. 432, 433); Pub. L. 86–523, 74 Stat. 220, 221 (16 U.S.C. 469), as amended, 88 Stat. 174 (1974); Pub. L. 89–665, 80 Stat. 915 (16 U.S.C. 470a–t), as amended, 84 Stat. 204 (1970), 87 Stat. 139 (1973), 90 Stat. 1320 (1976), 92 Stat. 3467 (1978), 94 Stat. 2987 (1980); Pub. L. 95–341, 92 Stat. 469 (42 U.S.C. 1996).

2. In § 296.1, the first sentence in paragraph (a) is revised to read as set forth at the end of this document.

3. In § 296.3 paragraph (a)(6) is added and paragraph (i) is revised to read as set forth at the end of this document.

4. In § 296.4, the section heading and paragraph (a) are revised and paragraph (c) is added to read as set forth at the end of this document.

5. In § 296.7, paragraph (b)(4) is added to read as set forth at the end of this document.

6. In § 296.13, paragraph (e) is added to read as set forth at the end of this document.

7. Section 296.19 is revised to read as set forth at the end of this document.

8. New §§ 296.20 and 296.21 are added to read as set forth at the end of this document.

Adela Backiel,

Deputy Assistant Secretary for Natural Resources and Environment.

Department of the Interior

43 CFR Part 7

As set forth in the common preamble, 43 CFR Part 7 is amended as follows:

PART 7—PROTECTION OF ARCHAEOLOGICAL RESOURCES

1. The authority citation for 43 CFR Part 7 is revised to read as follows:

Authority: Pub. L. 96–95, 93 Stat. 721, as amended; 102 Stat. 2983 (16 U.S.C. 470aa–mm) (Sec. 10(a). Related authority: Pub. L. 59–209, 34 Stat. 225 (16 U.S.C. 432,433); Pub. L. 86–523; 74 Stat. 220, 221 (16 U.S.C. 469), as amended; 88 Stat. 174 (1974); Pub. L. 89–665, 80 Stat. 915 (16 U.S.C. 470a–t), as amended, 84 Stat. 204 (1970), 87 Stat. 139 (1973), 90 Stat. 1320 (1976), 92 Stat. 3467 (1978), 94 Stat. 2987 (1980); Pub. L. 95–341, 92 Stat. 469 (42 U.S.C. 1996).

2. In § 7.1, the first sentence in paragraph (a) is revised to read as set forth at the end of this document.

3. In § 7.3, paragraph (a)(6) is added and paragraph (i) is revised to read as set forth at the end of this document.

4. In § 7.4, the section heading and paragraph (a) are revised and paragraph (c) is added to read as set forth at the end of this document.

5. In § 7.7, paragraph (b)(4) is added to read as set forth at the end of this document.

6. In § 7.13, paragraph (e) is added to read as set forth at the end of this document.

7. Section 7.19 is revised to read as set forth at the end of this document.

8. Reserved §§ 7.20 through 7.30 in subpart B are removed and new §§ 7.20 and 7.21 are added to subpart A to read as set forth at the end of this document.

George T. Frampton Jr.,

Assistant Secretary for Fish and Wildlife and Parks.

Text of the Common Rule

The text of the common rule, as adopted by the agencies in this document, appears below.

§ ____.1 Purpose.

(a) The regulations in this part implement provisions of the Archaeological Resources Protection Act of 1979, as amended (16 U.S.C. 470aa–mm) by establishing the uniform definitions, standards, and procedures to be followed by all Federal land managers in providing protection for archaeological resources, located on public lands and Indian lands of the United States. * * *

* * * * *

§ ____.3 Definitions.

* * * * *

(a) * * *

(6) For the disposition following lawful removal or excavations of Native American human remains and ''cultural items'', as defined by the Native American Graves Protection and Repatriation Act (NAGPRA; Pub. L. 101–601; 104 Stat. 3050; 25 U.S.C. 3001–13), the Federal land manager is referred to NAGPRA and its implementing regulations.

* * * * *

(i) *Act* means the Archaeological Resources Protection Act of 1979 (16 U.S.C. 470aa–mm).

§ ____.4 Prohibited acts and criminal penalties.

(a) Under section 6(a) of the Act, no person may excavate, remove, damage, or otherwise alter or deface, or attempt to excavate, remove, damage, or otherwise alter or deface any archaeological resource located on public lands or Indian lands unless such activity is pursuant to a permit issued under § ____.8 or exempted by § ____.5(b) of this part.

* * * * *

(c) Under section (d) of the Act, any person who knowingly violates or counsels, procures, solicits, or employs any other person to violate any prohibition contained in section 6 (a), (b), or (c) of the Act will, upon conviction, be fined not more than $10,000.00 or imprisoned not more than one year, or both: provided, however, that if the commercial or archaeological value of the archaeological resources involved and the cost of restoration and repair of such resources exceeds the

sum of $500.00, such person will be fined not more than $20,000.00 or imprisoned not more than two years, or both. In the case of a second or subsequent such violation upon conviction such person will be fined not more than $100,000.00, or imprisoned not more than five years, or both.

§ ____.7 Notification to Indian tribes of possible harm to, or destruction of, sites on public lands having religious or cultural importance.

* * * * *

(b) * * *

(4) The Federal land manager should also seek to determine, in consultation with official representatives of Indian tribes or other Native American groups, what circumstances should be the subject of special notification to the tribe or group after a permit has been issued. Circumstances calling for notification might include the discovery of human remains. When circumstances for special notification have been determined by the Federal land manager, the Federal land manager will include a requirement in the terms and conditions of permits, under § ____.9(c), for permittees to notify the Federal land manger immediately upon the occurrence of such circumstances. Following the permittee's notification, the Federal land manager will notify and consult with the tribe or group as appropriate. In cases involving Native American human remains and other ''cultural items'', as defined by NAGPRA, the Federal land manager is referred to NAGPRA and its implementing regulations.

§ ____.13 Custody of archaeological resources.

* * * * *

(e) Notwithstanding the provisions of paragraphs (a) through (d) of this section, the Federal land manager will follow the procedures required by NAGPRA and its implementing regulations for determining the disposition of Native American human remains and other ''cultural items'', as defined by NAGPRA, that have been excavated, removed, or discovered on public lands.

§ ____.19 Report.

(a) Each Federal land manager, when requested by the Secretary of the Interior, will submit such information as is necessary to enable the Secretary to comply with section 13 of the Act and comprehensively report on activities carried out under provisions of the Act.

(b) The Secretary of the Interior will include in the annual comprehensive report, submitted to the Committee on Interior and Insular Affairs of the United States House of Representatives and to the Committee on Energy and Natural Resources of the United States Senate under section 13 of the Act, information on public awareness programs submitted by each Federal land manager under § ____.20(b). Such submittal will fulfill the Federal land manager's responsibility under section 10(c) of the Act to report on public awareness programs.

(c) The comprehensive report by the Secretary of the Interior also will include information on the activities carried out under section 14 of the Act. Each Federal land manager, when requested by the Secretary, will submit any available information on surveys and schedules and suspected violations in order to enable the Secretary to summarize in the comprehensive report actions taken pursuant to section 14 of the Act.

§ ____.20 Public Awareness Programs.

(a) Each Federal land manager will establish a program to increase public awareness of the need to protect important archaeological resources located on public and Indian lands. Educational activities required by section 10(c) of the Act should be incorporated into other current agency public education and interpretation programs where appropriate.

(b) Each Federal land manager annually will submit to the Secretary of the Interior the relevant information on public awareness activities required by section 10(c) of the Act for inclusion in the comprehensive report on activities required by section 13 of the Act.

§ ____.21 Surveys and Schedules.

(a) The Secretaries of the Interior, Agriculture, and Defense and the Chairman of the Board of the Tennessee Valley Authority will develop plans for surveying lands under each agency's control to determine the nature and extent of archaeological resources pursuant to section 14(a) of the Act. Such activities should be consistent with Federal agency planning policies and other historic preservation program responsibilities required by 16 U.S.C. 470 *et seq*. Survey plans prepared under this section will be designed to comply with the purpose of the Act regarding the protection of archaeological resources.

(b) The Secretaries of the Interior, Agriculture, and Defense and the Chairman of the Tennessee Valley Authority will prepare schedules for surveying lands under each agency's control that are likely to contain the most scientifically valuable archaeological resources pursuant to section 14(b) of the Act. Such schedules will be developed based on objectives and information identified in survey plans described in paragraph (a) of this section and implemented systematically to cover areas where the most scientifically valuable archaeological resources are likely to exist.

(c) Guidance for the activities undertaken as part of paragraphs (a) through (b) of this section is provided by the Secretary of the Interior's Standards and Guidelines for Archeology and Historic Preservation.

(d) Other Federal land managing agencies are encouraged to develop plans for surveying lands under their jurisdictions and prepare schedules for surveying to improve protection and management of archaeological resources.

(e) The Secretaries of the Interior, Agriculture, and Defense and the Chairman of the Tennessee Valley Authority will develop a system for documenting and reporting suspected violations of the various provisions of the Act. This system will reference a set of procedures for use by officers, employees, or agents of Federal agencies to assist them in recognizing violations, documenting relevant evidence, and reporting assembled information to the appropriate authorities. Methods employed to document and report such violations should be compatible with existing agency reporting systems for documenting violations of other appropriate Federal statutes and regulations. Summary information to be included in the Secretary's comprehensive report will be based upon the system developed by each Federal land manager for documenting suspected violations.

[FR Doc. 95–1878 Filed 1–25–95; 8:45 am]

BILLING CODE 4310–70–P, 3410–11–P, 5000–04–P, 8120–01–P

federal register

Thursday
January 26, 1995

Part III

Department of the Interior

Fish and Wildlife Service

Endangered and Threatened Wildlife and Plants: Saint Francis' Satyr and Hine's Emerald Dragonfly; Final Rules

DEPARTMENT OF THE INTERIOR

Fish and Wildlife Service

50 CFR Part 17

RIN 1018–AC44

Endangered and Threatened Wildlife and Plants; Saint Francis' Satyr Determined To Be Endangered

AGENCY: Fish and Wildlife Service, Interior Department.

ACTION: Final rule.

SUMMARY: The Fish and Wildlife Service (Service) determines the Saint Francis' satyr butterfly (*Neonympha mitchellii francisci*) to be an endangered species under the authority of the Endangered Species Act of 1973, as amended (Act). This butterfly is known only from a single locality in North Carolina. Recent heavy collecting pressure on this butterfly has resulted in the one small remaining population being reduced to near extinction. This action implements Federal protection and recovery provisions for Saint Francis' satyr, as provided by the Act.

EFFECTIVE DATE: February 27, 1995.

ADDRESSES: The complete file for this rule is available for inspection, by appointment, during normal business hours at the Asheville Field Office, U.S. Fish and Wildlife Service, 330 Ridgefield Court, Asheville, North Carolina 28806.

FOR FURTHER INFORMATION CONTACT: Ms. Nora Murdock at the above address (704/665–1195, Ext. 231).

SUPPLEMENTARY INFORMATION:

Background

Neonympha mitchellii francisci is a subspecies of one of two North American species of *Neonympha*. One of the rarest butterflies in eastern North America, it was described by Parshall and Kral in 1989 from material collected in North Carolina. These authors estimated that the single known population probably produced less than 100 adults per year. Shortly thereafter, Saint Francis' satyr was reported to have been collected to extinction (Refsnider 1991, Schweitzer 1989). The species was rediscovered at the type locality in 1992 during the course of a Service-funded status survey. Section 3 of the Act defines ''species'' to include ''any subspecies of fish or wildlife or plants, and any distinct population segment of any species of vertebrate fish or wildlife * * *.'' Therefore, although *N. m. francisci* is recognized taxonomically as a subspecies, it will be referred to as a ''species'' throughout the remainder of this rule.

Saint Francis' satyr is a fairly small, dark brown butterfly and is a typical member of the Satyrinae, a subfamily of the Nymphalidae family, which includes many species commonly called satyrs and wood nymphs. The wingspan for the species ranges from 34 to 44 mm (Opler and Malikul 1992). Saint Francis' satyr and Mitchell's satyr (*N. m. mitchellii*), the northern subspecies, which was listed as endangered on May 20, 1992 (57 FR 21569), are nearly identical in size and show only a slight degree of sexual size dimorphism (Hall 1993, Parshall and Kral 1989). Like most species in the wood nymph group, Saint Francis' satyr has conspicuous ''eyespots'' on the lower surfaces of the wings. These eyespots are dark maroon-brown in the center, reflecting a silver cast in certain lights. The border of these dark eyespots is straw-yellow in color, with an outermost border of dark brown. The eyespots are usually round to slightly oval and are well developed on the forewing as well as on the hind wing. The spots are accented by two bright orange bands along the posterior wing edges and two darker brown bands across the central portion of each wing. Saint Francis' satyr, like the northern subspecies, can be distinguished from its North American congener, *N. areolata*, by the latter's well-marked eyespots on the upper wing surfaces and brighter orange bands on the hind wing as well by its lighter coloration and stronger flight (Refsnider 1991, McAlpine *et al.* 1960, Wilsman and Schweitzer 1991, Hall 1993).

Saint Francis' satyr is extremely restricted geographically. The northern subspecies has been eliminated from approximately half its known range, primarily due to collecting (Refsnider 1991). Saint Francis' satyr is now known to exist as a single population in North Carolina.

The annual life cycle of *N. m. francisci*, unlike that of its northern relative, is bivoltine. That is, it has two adult flights or generations per year. Larval host plants are believed to be graminoids such as grasses, sedges, and rushes. Little else is known about the life history of this butterfly. The habitat occupied by this satyr consists primarily of wide, wet meadows dominated by sedges and other wetland graminoids. In the North Carolina sandhills, such meadows are often relicts of beaver activity. Unlike the habitat of Mitchell's satyr, the North Carolina species' habitat cannot properly be called a fen because the waters of this sandhills region are extremely poor in inorganic nutrients. Hall (1993) states:

> Whereas true fens—apparently the habitat of the northern form of *N. mitchellii* (Wilsman and Schweitzer 1991)—are circumneutral to basic in pH and are long-lasting features of the landscape, the boggy areas of the sandhills are quite acidic as well as ephemeral, succeeding either to pocosin or swamp forest if not kept open by frequent fire or beaver activity.

Hall (1993) further states:

> Under the natural regime of frequent fires ignited by summer thunderstorms, the sandhills were once covered with a much more open type of woodland, dominated by longleaf pine, wiregrass, and other fire-tolerant species. The type of forest that currently exists along [the creek inhabited by Saint Francis' satyr] can only grow up under a long period of fire suppression. The dominance on this site of loblolly pine, moreover, is due primarily to past forestry management practices, not any form of natural succession.

Parshall and Kral speculated that *N. m. francisci* is a relict from a more widespread southern distribution during the Pleistocene period. Hall (1993) presents the following alternative hypothesis:

> The current narrow distribution of *francisci* could also be a result of the enormous environmental changes that have occurred in the southern coastal plain just within the past 100 years. Only the discovery of additional populations or fossil remains can clarify this situation.

Extensive searches have been made of suitable habitat in North Carolina and South Carolina, but no other populations of this butterfly have been found (Hall 1993, Schweitzer 1989).

Previous Federal Action

Federal government actions on this species began when it was included as a category 2 species in the animal candidate review list published on November 21, 1991 (56 FR 58804). Category 2 species are those for which the Service believes that Federal listing as endangered or threatened may be warranted but for which conclusive data on biological vulnerability and threat are not currently available to support proposed rules. Recent surveys conducted by Service and State personnel led the Service to believe that sufficient information existed to proceed with an emergency rule to list *Neonympha mitchellii francisci* as endangered. The emergency rule was published on April 18, 1994 (59 FR 18324). A proposed rule (59 FR 18350) was published simultaneously to initiate the formal listing process for this species.

Summary of Comments and Recommendations

In the April 18, 1994, proposed rule and associated notifications, all interested parties were requested to submit factual reports or information that might contribute to the development of a final rule. Appropriate State agencies, county governments, Federal agencies, scientific organizations, and other interested parties were contacted and requested to comment. A newspaper notice inviting public comment was published in the ''Fayetteville Observer,'' Fayetteville, North Carolina, on May 6, 1994. Only one written comment was received, and that letter expressed support for the proposal.

Summary of Factors Affecting the Species

After a thorough review and consideration of all information available, the Service has determined that Saint Francis' satyr should be classified as an endangered species. Procedures found at section 4(a)(1) of the Act and regulations (50 CFR part 424) promulgated to implement the listing provisions of the Act were followed. A species may be determined to be an endangered or threatened species due to one or more of the five factors described in section 4(a)(1). These factors and their application to Saint Francis' satyr (*Neonympha mitchellii francisci*) are as follows:

A. *The present or threatened destruction, modification, or curtailment of its habitat or range.* Because of its relatively recent discovery, it is impossible to determine what the original range of Saint Francis' satyr might have been. However, based upon its demonstrated dependency on periodic fires and the general trend of fire suppression on private lands, it seems reasonable to assume that it once occupied a more extensive area. This assumption is further supported by extensive recent searches of suitable habitat where the species could not be found. As stated by Hall (1993):

> In order for *francisci* to have survived over the past 10,000 years, there must surely have been more populations and greater numbers of individuals than apparently now exist * * * . As is true for many species that were once widespread in the sandhills, massive habitat alteration must also be a major factor in the diminution of the range of *francisci* * * * reductions in *francisci*'s range would have accompanied the extensive loss of wetland habitats in the coastal plain. Again, the draining of swamps, pocosins, Carolina bays, savannas, flatwoods, and bogs for conversion to agriculture and silviculture is well known. In the case of *francisci*, however, the extirpation of beavers from the Carolinas may have been the greatest factor.

Beavers had been virtually eliminated from North Carolina by the turn of the century. Reintroductions began in 1939, but it was several decades before they again became an agent for creation of the sedge meadow habitats favored by Saint Francis' satyr (Hall 1993, Woodward and Hazel 1991). Hall further states:

> As the landscape mosaic of open woodlands and wetlands of the coastal plain declined throughout the past two centuries, the range of *francisci* must have become increasingly fragmented. Although isolated populations may have persisted as long as suitable habitat remained, the structure of their metapopulation would have been destroyed. Opportunistic colonization of newly available habitats as well as the repopulation of sites wiped clean by fire or other catastrophe would have become eventually impossible; one by one, the isolated remnants would have blinked out of existence. Although again speculative, the fracturing of metapopulations has been used to explain the decline of the arogos skipper and a number of butterflies associated with the tall-grass prairies (Panzer, 1988, D. Schweitzer, pers. comm.). That *francisci* was a relict to begin with only exacerbated this problem; the overall effect was to bring it as close to extinction as any butterfly in the country.

The sole surviving population of this species is now fragmented into less than half a dozen small colonies that occupy a total area no larger than a few square miles.

B. Overutilization for commercial, recreational, scientific, or educational purposes. Both subspecies of *Neonympha mitchellii* are highly prized by collectors, including commercial collectors who often systematically collect every individual available. Several populations of the northern subspecies are known to have been obliterated by collectors, and others are believed extremely vulnerable to this threat (Refsnider 1991). As mentioned in the Background section, the single known population of Saint Francis' satyr was so hard-hit by collectors in the 3 years following its initial discovery that it was believed to have been collected to extinction. Subsequent to the emergency listing of the northern subspecies in 1991 (56 FR 28828) and prior to the publication of the emergency listing of Saint Francis' satyr, the North Carolina population was the last site where *Neonympha mitchellii* could legally be collected. Following the emergency listing of Mitchell's satyr, the North Carolina Natural Heritage Program received several inquiries from collectors about access to the last available population. Several expressed apprehension about any restriction on collecting of this rare and much-sought-after satyr. Collectors reportedly visited the known site every day throughout the flight periods, taking every adult they saw (Hall 1993). After this first wave of over-collection, many unsuccessful searches for the butterfly were made before it was eventually rediscovered. Numbers of individuals then seen were much lower than those reported by Parshall and Kral (1989), with the highest single count consisting of only 11 butterflies (Hall 1993). Even though part of this population is protected from collectors by virtue of being within dangerous artillery impact areas on Department of Defense (DOD) land, intensive collecting from the periphery of these areas could reduce total population numbers below the levels needed for long-term survival. Very little is known about this species' life history and ecological requirements, but it appears to be a more vagile species than its northern relative. It may well be dependent upon a large metapopulation structure in order to colonize new sites or recolonize those from which it has been extirpated.

C. Disease or predation. This butterfly, like others, is undoubtedly consumed by predators, but there is no evidence that predation is a threat to the species at this point. Disease is not known to be a factor in its decline.

D. The inadequacy of existing regulatory mechanisms. Insects are not protected from collection under North Carolina law. There are also no DOD regulations that would restrict the collecting of Saint Francis' satyr in North Carolina. Federal listing of this species will provide legal protection against indiscriminate taking and illegal trade.

E. Other natural or manmade factors affecting its continued existence. Although the habitat occupied by this species is dependent upon some form of disturbance to set back succession (e.g., periodic fire and/or beaver impoundments), intense fires at critical times during the life cycle of the species can eliminate small colonies. Historically, this would not have been a problem since there were undoubtedly other adjacent populations that could recolonize extirpated sites. However, the fact that only one population of this species now remains makes it more vulnerable to such threats as catastrophic climatic events, inbreeding depression, disease, and parasitism. Part of the occupied area is adjacent to regularly traveled roads, where there is the threat of toxic chemical spills into the species' wetland habitat. Current military use of the impact areas is

favorable to this species; the frequent fires associated with shelling are undoubtedly a principal reason why the species is surviving on military lands and not on surrounding private lands. DOD personnel are aware of the species' plight and have been cooperative in protection efforts. However, heavy siltation is a potential problem that could threaten the small drainages occupied by the species. Although troop movements directly through an area occupied by the satyr could have negative impacts, this has not occurred to date; these activities have now been directed away from areas where the satyr occurs. Other potential threats to the species include pest control programs (for mosquitoes or gypsy moths) and beaver control.

The Service has carefully assessed the best scientific and commercial information available regarding the past, present, and future threats faced by this species in determining to make this rule final. Based on this evaluation, the preferred action is to list Saint Francis' satyr as endangered. With only one population remaining (and this one having already been diminished by intensive collecting) and with the other subspecies having been completely eliminated from half the States where it historically occurred, the threat of over-collection cannot be denied. The additional threats to the habitat from fire exclusion and the lack of other processes that formerly created suitable habitat make this species even more vulnerable to extinction. Critical habitat is not being designated for the reasons discussed below.

Critical Habitat

Critical habitat is defined in section 3 of the Act as: (i) the specific areas within the geographical area occupied by a species, at the time it is listed in accordance with the Act, on which are found those physical or biological features (I) essential to the conservation of the species and (II) that may require special management considerations or protection and; (ii) specific areas outside the geographical area occupied by a species at the time it is listed, upon a determination that such areas are essential for the conservation of the species. ''Conservation'' means the use of all methods and procedures needed to bring the species to the point at which listing under the Act is no longer necessary.

Section 4(a)(3) of the Act requires that, to the maximum extent prudent and determinable, the Secretary designate critical habitat at the time a species is determined to be endangered or threatened. The Service finds that designation of critical habitat is not presently prudent for this species. Service regulations (50 CFR 424.12(a)(1)) state that designation of critical habitat is not prudent when or both of the following situations exist—(1) The species is threatened by taking or other human activity, and identification of critical habitat can be expected to increase the degree of threat to the species, or (2) such designation of critical habitat would not be beneficial to the species.

As discussed under Factor B in the Summary of Factors Affecting the Species section, Saint Francis' satyr has already been impacted by over-collecting and continues to be threatened by collecting pressure. Publication of critical habitat descriptions and maps would make the satyr more vulnerable to collection and would increase enforcement problems and the likelihood of extinction. Protection of this species' habitat will be addressed through the recovery process and through the section 7 jeopardy standard. The single remaining population is located on military lands, where the DOD is aware of its occurrence.

Available Conservation Measures

Conservation measures provided to species listed as endangered or threatened under the Act include recognition, recovery actions, requirements for Federal protection, and prohibitions against certain practices. Recognition through listing encourages and results in conservation actions by Federal, State, and private agencies, groups, and individuals. The Act provides for possible land acquisition and cooperation with the States and requires that recovery actions be carried out for all listed species. The protection required of Federal agencies and the prohibitions against certain activities involving listed animals are discussed, in part, below.

Section 7(a) of the Act requires Federal agencies to evaluate their actions with respect to any species that is proposed or listed as endangered or threatened and with respect to its critical habitat, if any is being designated. Regulations implementing this interagency cooperation provision of the Act are codified at 50 CFR part 402. Section 7(a)(2) requires Federal agencies to ensure that activities they authorize, fund, or carry out are not likely to jeopardize the continued existence of a listed species or to destroy or adversely modify its critical habitat. If a Federal action may affect a listed species or its critical habitat, the responsible Federal agency must enter into formal consultation with the Service.

Federal activities that could impact Saint Francis' satyr and its habitat in the future include, but are not limited to, the following: road and firebreak construction, pesticide application, beaver control, troop movements, prescribed burning and fire suppression, and facilities construction. The only known population is located on military lands, where the DOD is already working with the Service to secure the protection and proper management of Saint Francis' satyr while accommodating military activities to the extent possible. Conservation of this butterfly is consistent with most ongoing military operations at the occupied site, and the listing of the species is not expected to result in significant restrictions on military use of the land.

The Act and implementing regulations found at 50 CFR 17.21 set forth a series of general prohibitions and exceptions that apply to all endangered wildlife. These prohibitions, in part, make it illegal for any person subject to the jurisdiction of the United States to take (includes harass, harm, pursue, hunt, shoot, wound, kill, trap, or collect; or to attempt any of these), import or export, ship in interstate commerce in the course of a commercial activity, or sell or offer for sale in interstate or foreign commerce any listed species. It also is illegal to possess, sell, deliver, carry, transport, or ship any such wildlife that has been taken illegally. Certain exceptions apply to agents of the Service and State conservation agencies.

It is the policy of the Service, published in the **Federal Register** on July 1, 1994 (59 FR 34272), to identify to the maximum extent practicable at the time of listing those activities that would or would not constitute a violation of section 9 of the Act. The intent of this policy is to increase public awareness of the effect of the listing on proposed or ongoing activities within a species' range. Since Saint Francis' satyr is currently only found on DOD lands, and since the DOD is cooperating with the Service in protecting this species, there do not appear to be any current military activities that would likely be a violation of section 9.

Taking the species for butterfly collections or for sale, such as has been done in the past, is prohibited. Possession of specimens legally acquired would not be a violation. The Service is not aware of any otherwise lawful activities being conducted or proposed by the public that will be affected by this listing and result in a violation of section 9. Questions

regarding whether specific activities will constitute a violation of section 9 should be directed to the Field Supervisor of the Service's Asheville Office (see **ADDRESSES** section).

Permits may be issued to carry out otherwise prohibited activities involving endangered wildlife species under certain circumstances. Regulations governing permits are codified at 50 CFR 17.22 and 17.23. Such permits are available for scientific purposes, to enhance the propagation or survival of the species, and/or for incidental take in connection with otherwise lawful activities. Requests for copies of the regulations regarding listed wildlife and inquires about prohibitions and permits should be addressed to the U.S. Fish and Wildlife Service, Regional Permit Coordinator, 1875 Century Boulevard, Suite 200, Atlanta, Georgia 30345 (404/697–7110, facsimile 404/679–7081).

National Environmental Policy Act

The Fish and Wildlife Service has determined that Environmental Assessments and Environmental Impact Statements, as defined under the authority of the National Environmental Policy Act of 1969, need not be prepared in connection with regulations adopted pursuant to section 4(a) of the Endangered Species Act of 1973, as amended. A notice outlining the Service's reasons for this determination was published in the **Federal Register** on October 25, 1983 (48 FR 49244).

References Cited

Hall, S. 1993. A rangewide status survey of Saint Francis's satyr *Neonympha mitchellii francisci (Lepidoptera: Nymphalidae*). Report to U.S. Fish and Wildlife Service, Endangered Species Field Office, Asheville, NC. 44 pp.

McAlpine, W., S. Hubble, and T. Pliske. 1960. The distribution, habits, and life history of *Euptychia mitchellii* (*Satyrinae*). J. Lep. Soc. 14:209–225.

Opler, P., and V. Malikul. 1992. A field guide to eastern butterflies. Houghton Miflin Co., New York.

Parshall, D. K., and T. W. Kral. 1989. A new subspecies of *Neonympha mitchellii* (French) (*Satyrinae*) from North Carolina. J. Lep. Soc. 43:114–119.

Refsnider, R. 1991. Emergency rule to list the Mitchell's satyr as endangered. **Federal Register** 56(122):28825.

Schweitzer, D. 1989. A review of category 2 insects in the U.S. Fish and Wildlife Service's Regions 3, 4, and 5. Report to the U.S. Fish and Wildlife Service, Newton Corner, MA. Pp. 132–133.

Wilsman, L., and D. Schweitzer. 1991. A rangewide status survey of Mitchell's satyr, *Neonympha mitchellii mitchellii* (*Lepidoptera: Nymphalidae*). Report to the U.S. Fish and Wildlife Service, Region 3, Endangered Species Office, Twin Cities, MN.

Woodward, D., and R. Hazel. 1991. Beavers in North Carolina; ecology, utilization, and management. Cooperative Extension Service Publication No. AG–434, North Carolina State University, Raleigh, NC.

Author

The primary author of this final rule is Ms. Nora Murdock (see **ADDRESSES** section) (704/665–1195, Ext. 231).

List of Subjects in 50 CFR Part 17

Endangered and threatened species, Exports, Imports, Reporting and recordkeeping requirements, and Transportation.

Regulation Promulgation

Accordingly, part 17, subchapter B of chapter I, title 50 of the Code of Federal Regulations, is amended as set forth below:

PART 17—[AMENDED]

(1) The authority citation for part 17 continues to read as follows:

Authority: 16 U.S.C. 1361–1407; 16 U.S.C. 1531–1544; 16 U.S.C. 4201–4245; Pub. L. 99–625, 100 Stat. 3500; unless otherwise noted.

(2) Section 17.11(h) is amended by adding the following, in alphabetical order under ''Insects,'' to the List of Endangered and Threatened Wildlife to read as follows:

§ 17.11 Endangered and threatened wildlife.

* * * * *

(h) * * *

Species		Historic range	Vertebrate population where endangered or threatened	Status	When listed	Critical habitat	Special rules
Common name	Scientific name						
*	*	*	*	*	*	*	
INSECTS							
*	*	*	*	*	*	*	
Butterfly, Saint Francis' satyr.	*Neonympha mitchellii francisci.*	U.S.A. (NC)	NA	E	539E, 574	NA	NA
*	*	*	*	*	*	*	

Dated: December 21, 1994.

Mollie H. Beattie,

Director, Fish and Wildlife Service.

[FR Doc. 95–1982 Filed 1–25–95; 8:45 am]

BILLING CODE 4310–55–P

50 CFR Part 17

RIN 1018–AC09

Endangered and Threatened Wildlife and Plants; Determination of Endangered Status for the Hine's Emerald Dragonfly (Somatochlora hineana)

AGENCY: Fish and Wildlife Service, Interior Department.

ACTION: Final rule.

SUMMARY: The U.S. Fish and Wildlife Service (Service) determines the Hine's emerald dragonfly (*Somatochlora hineana*) to be an endangered species pursuant to the Endangered Species Act (Act) of 1973, as amended. Historically, this dragonfly was reported from sites in Indiana and Ohio. Recent reports indicate that it is currently present at only seven small sites within Cook, DuPage, and Will Counties in Illinois, and at six sites in Door County, Wisconsin. This species is threatened primarily by habitat loss and modification. This rule implements the Federal protection provisions afforded by the Act to the Hine's emerald dragonfly.

EFFECTIVE DATE: January 26, 1995.

ADDRESSES: The complete file for this rule is available for inspection, by appointment, during normal business hours at the U.S. Fish and Wildlife Service, Regional Office, Division of Endangered Species, Bishop Henry Whipple Federal Building, One Federal Drive, Fort Snelling, Minnesota 55111–4056.

FOR FURTHER INFORMATION CONTACT: Ms. Carlita Shumate (see **ADDRESSES** section) or by telephone (612/725–3276).

SUPPLEMENTARY INFORMATION:

Background

The Hine's emerald dragonfly, also known as the Ohio emerald dragonfly, was described in 1931 from seven adults collected June 7 and 14, 1929, and July 4, 1930, near Indian Lake, Logan County, Ohio (Williamson 1931). It is a dragonfly (class Insecta, order Odonata) with bright, emerald-green eyes, body size ranging 60–65 mm (ca. 2.5 inches) in length, and wing span of 80–85 mm (ca. 3.3 inches). The adult is distinguished from other adults in the genus *Somatochlora* by its metallic green color with two distinct creamy-yellow lateral stripes, the clasper-like appendages at the end of the abdomen in the male, and the shape of the vulvar lamina in the female.

Cashatt and Vogt (1990) indicated that the Illinois habitat of the Hine's emerald dragonfly consists of complex wetlands with small, calcareous or underlying limestone bedrock, and shallow, spring-fed streams that drain into wet meadows and cattail marshes. These marshes are found primarily along the Des Plaines River drainage in Illinois. Wisconsin habitat consists of small, calcareous, marshy streams and associated cattail marshes on dolomite bedrock.

Price (1958) reported collecting a total of 21 specimens in Williams County, Ohio from Mud Lake in 1949 (now Mud Lake State Nature Preserve) and Bridgewater Township in 1956; and from the Toledo Oak Openings Metropark in 1952, 1953, and 1956 (referred to as Oak Openings State Park by Price) Lucas County, Ohio. Until recently, the species was reported only from Ohio and Indiana (Montgomery 1953, Bick 1983). Recent investigations indicate that the species has apparently been extirpated from Ohio. The species' status in Indiana is currently uncertain. An adult male was documented to be the last collected specimen from Gary, Indiana, on June 22, 1945 (Montgomery 1953, Bick 1983, Cashatt and Sims 1993).

No additional information on the distribution of this species was available until 1990, when the Service supported investigations in Wisconsin by Vogt and Cashatt (1990), in Illinois by Cashatt and Vogt (1990), and in Michigan by Vogt (1991). These investigations confirmed the presence of remnant populations in Wisconsin and Illinois. In Wisconsin, Vogt and Cashatt (1990) surveyed 27 potential sites in nine eastern counties. They found the species at six sites in Door County, and the sites are roughly on about one-third of private, State, and private (non-profit) conservation lands. Twenty-one sites were surveyed in Michigan with no new occurrences found. In Illinois, Cashatt and Vogt (1990) surveyed 28 potential sites in five counties and reported the dragonfly present at five sites in Cook, DuPage, and Will Counties. Within these three counties, two sites are on private lands and the remaining sites are on public lands. The Service also supported additional investigations in Illinois by Cashatt and Vogt (1991), Cashatt, Sims, and Wiker (1992), and in Wisconsin by Vogt and Cashatt (1991), and Smith (1993). Cashatt and Sims (1993) conducted further surveys and located two relatively small sites in Cook County, Illinois with one site each on private and public land, bringing the total number of Illinois sites to seven.

Hine's emerald dragonfly is listed as endangered by the International Union for the Conservation of Nature, is on the Illinois State endangered species list, will be proposed for listing as endangered in Wisconsin, and has been assigned Global Element Rank of G1G2 (critically imperiled globally) by The Nature Conservancy.

Previous Federal Action

On May 22, 1984, the Service published in the **Federal Register** Notice of Review (49 FR 21664) its first list of invertebrate animal species being considered for listing under the Act. Hine's emerald dragonfly (under the common name of Ohio emerald dragonfly) was designated a category 2* species with its range consisting of Ohio and Indiana. Category 2 includes those taxa for which proposing to list as endangered or threatened is possibly appropriate, but for which substantial data on biological vulnerability and threats are not currently available to support proposed rules. The asterisk indicated that authentic records had not been obtained since 1963 and that some of the taxa in this category were possibly extinct. The January 6, 1989, Notice of Review (54 FR 554) assigned Hine's emerald dragonfly to category 2, and on November 21, 1991, (56 FR 58804) the dragonfly was reassigned to category 1. Category 1 includes species for which the Service now possesses sufficient information to support a listing as threatened or endangered.

On October 4, 1993, the Service published (58 FR 51604) a proposal to list Hine's emerald dragonfly as an endangered species. A notice (58 FR 64927) extending the public comment period and public hearing request deadline was published on December 10, 1993, to provide sufficient time for submission of comments and requests for public hearings. A notice of a public hearing and reopening of the comment period was published May 12, 1994 (59 FR 24678), and the public hearing was held May 25, 1994. Based on status surveys, documentation addressing the fragmented habitat, the small size and disjunct distribution of the remnant populations, and the immediacy of threats to the remnant populations, the Service determines that the species warrants protection under the Act.

Summary of Comments and Recommendations

In the October 4, 1993, proposed rule (58 FR 51604) and associated notifications, all interested parties were invited to submit factual reports or information that may contribute to the development of a final rule. The comment period was reopened and extended until January 3, 1994, (58 FR 64927) to accommodate submission of comments and requests for public hearings. Appropriate State agencies, county governments, Federal agencies, scientific organizations, and other interested parties were contacted and invited to comment. Newspaper notices inviting general public comment were published in the Chicago Tribune (Chicago, Illinois) on November 10, 1993, and the Green Bay Press Gazette (Green Bay, Wisconsin) on November 10 and December 9, 1993.

A total of 50 comments, including four State agencies, one county representative, ten industrial and pest control companies, six scientific organizations and environmental group representatives, and 29 individuals, were received; 33 of those comments supported, none opposed, and 17 were neutral on the proposed action. One of the supporting comments had seven signatures, and three of the supporting comments had two signatures each.

A public hearing was requested on December 20, 1993, by Mr. Jerome M. Viste, representing the Door County Environmental Council, Incorporated, and Mr. George M. Reynolds, representing Reynolds & Company. Notices announcing the hearing were published in the Green Bay Press Gazette (Wisconsin) on May 12, 1994, the Chicago Tribune (Illinois) and the

Door County Advocate (Sturgeon Bay, Wisconsin) on May 13, 1994. The hearing was held in the General Meeting Room (A150) of the Door County Courthouse, 421 Nebraska Street, Sturgeon Bay, Wisconsin on May 25, 1994, with 27 attendees. Fifteen comments were received during the hearing. Two comments were in opposition to the listing, ten were supportive, and three were neutral. The hearing consisted of brief overviews of the Act as it pertained to the listing process, prohibited activities, permit requirements, and the status, distribution and biology of Hine's emerald dragonfly; a statement session by 13 attendees; and a question and answer session that raised 12 issues regarding the proposed listing.

Thirteen written comments were received following the **Federal Register** notice that reopened the comment period to accommodate the public hearing. Ten comments supporting, three neutral, and none opposing the listing proposal were received.

Comments updating the data presented in **SUMMARY**, **BACKGROUND** and **SUMMARY OF FACTORS AFFECTING THE SPECIES** are incorporated in those sections of this final rule. Written comments presented at the public hearing and those received during the comment periods with the Service's response to each are discussed in the following summary. Comments of a similar nature or point are grouped into a number of general issues.

Issue 1—How is the range of the species determined? Since recent surveys extended the range, the listing may be premature until additional habitats and additional localities are surveyed to make certain there are no additional populations.

Service Response—The range of the Hine's emerald dragonfly was determined based on the best scientific and commercial data available. The Service, in cooperation with the States of Illinois, Indiana, Michigan, Ohio, and Wisconsin, conducted several studies to determine the status of the dragonfly. The scientists who conducted these studies first examined historical records on the distribution of the dragonfly to identify sites that were known to support the dragonfly. These sites were re-visited to determine if they still supported Hine's emerald dragonflies. Status surveys were also conducted in other midwestern States, like Michigan, that were outside of the historic range of the dragonfly, but supported potentially suitable habitat. To date, status surveys have been conducted throughout the historical range of the Hine's emerald dragonfly and elsewhere in the midwest that had similar habitat. The Service will continue searching for the dragonfly in new locations; however, based on the best scientific and commercial data available, any new populations are likely to be small and located in highly fragmented or degraded habitats and would not change the current recommendation to list this species as endangered.

Issue 2—If listed, collection is prohibited. Listing any insect is counterproductive for those trained in dragonfly identification; a specimen is needed when gathering information on the species.

Service Response—The Act prohibits ''take'' of an endangered species, which includes a prohibition against collecting endangered species. However, the Act allows the Service to issue permits that allow collection for scientific purposes or to enhance the propagation or survival of listed species. The Service will work with the scientific community to develop survey techniques that do not require voucher specimens, but can issue permits to authorize voucher specimens as part of studies that contribute to improving the status of the Hine's emerald dragonfly. Procedures for obtaining such permits are found in 50 CFR 17.22 (see ''Available Conservation Measures'').

Issue 3—How does the Service justify spending dollars to list and enforce the endangered species activity for the Hine's emerald dragonfly which has already survived many other adverse elements? Tax dollars should be used in creating more apartments, jobs and helping the homeless.

Service Response—Although the Hine's emerald dragonfly may have survived a lot of environmental change during its history, its continued existence is now threatened by human actions that are altering the environment much faster than the environmental change the dragonfly would have experienced in the past. The Hine's emerald dragonfly depends on wetlands and spring-fed streams that feed larger bodies of water in its range; it is endangered by the destruction of those habitats and water quality degradation. Efforts to recover this species will focus on protecting its habitat and improving the quality of the water that flows into its habitat. By following Congress' direction to conserve the ecosystems on which this species depends, the Service will try to protect and improve the quality of waters in habitats that support the dragonfly. The Service believes that any such improvements in water quality will benefit not only the dragonfly, but any human populations that live near or depend on those waters as a source of drinking water, recreational opportunity, or esthetic pleasure.

Issue 4—Designate critical habitat throughout its range and especially in the Three Springs watershed.

Service Response—Designated critical habitat are areas of habitat, land, water and air space essential to listed species for survival and recovery. On the basis of the best scientific and commercial data available, the Service must prepare an analysis that considers the economic and other impacts of any proposed designated areas. Through review of this information, the Service will conclude whether critical habitat designation is prudent and determinable. The available data has not allowed the Service to identify proposed critical habitat at this time.

Issue 5—Immediately draft a recovery plan.

Service Response—Recovery plans, in accordance with section 4(f) of the Act, are developed subsequent to a species being listed.

Issue 6—Listing would impact a State mandated mission to control mosquitoes in Illinois.

Service Response—The Service will work with State and other Federal agencies to establish guidelines and measures to avoid and minimize adverse affects to allow mosquito control programs to proceed.

Issue 7—The Service should implement an emergency rule to list the Hine's emerald dragonfly as endangered since the one metapopulation in Illinois will be compromised if listing would take a year to complete.

Service Response—Emergency listing is considered only if significant take or habitat destruction will occur prior to completing the normal listing process. A review of the existing threats to the dragonfly does not indicate that significant take or habitat destruction will occur before the effective date of this listing.

Issue 8—Will qualified, expert taxonomists be used to confirm the presence and extent of the dragonfly, so that decisions regarding the listing and protection of the dragonfly will be based on good data?

Service Response—Yes. The Service has supported investigations in Wisconsin and Illinois conducted by Dr. Everett Cashatt (Illinois State Museum) and Mr. Tim Vogt (The Nature Conservancy), who are both recognized as qualified entomologists with expertise in Odonata. They have conducted several extensive surveys and provided the Service with data that support this final rule. Additional information has also been obtained from Mr. Bill Smith of the Wisconsin

Department of Natural Resources' Bureau of Endangered Resources, as well as other qualified biologists.

Issue 9—What determines the extent of the area that will be covered by the listing? It would seem that the area should be defined as narrowly as reasonable to protect the dragonfly but not overly broad so that mosquito and other insect control work could continue as usual. This would be especially important in a large urban area like Chicago and its suburbs with its wide diversity.

Service Response—This listing will protect the Hine's emerald dragonfly in those areas it currently occurs. Within that distribution, the specific areas that need to be protected will be determined on a case-by-case basis. The Service will work with State and local insect control agencies to determine how the listing will affect their activities.

Issue 10—It is unclear what mosquito control strategies could be used within the protected habitat areas. It would be important that restrictions on the use of various pesticides and other control methods be specific and narrow, enough to protect the dragonfly but not so broad as to prevent control of mosquitoes. In particular, *Bacillus thuringiensis* ssp. *israelensis* (Bti) and methoprene have been shown to control mosquitoes with little effect on non-target organisms. It is our hope that materials like Bti, methoprene, and others with little non-target effects could continue to be used in protected habitats, and that materials be restricted only if they have a proven detrimental effect on the dragonfly nymph.

Service Response—Mosquito control measures that are known to affect only target organisms are not likely to be affected by this listing. Control measures that are not known to affect dragonflies in the Order Odonata are also not likely to be affected by this listing. Other measures will have to be evaluated on a case-by-case basis. The Service will work with State and local insect control agencies to determine how the listing will affect their activities.

Issue 11—In the event of a public health emergency, like a St. Louis encephalitis (SLE) outbreak, it would be important for escalated mosquito control measures to be instituted. These would likely include restricted measures such as mosquito adulticiding. Could some restrictions be temporarily lifted to maintain the public's health? If so, who would make those decisions and how would they be made?

Service Response—The Act includes provisions for handling emergencies. The Service will work with the Environmental Protection Agency and appropriate States and local government agencies to outline those provisions and to establish procedures for handling emergencies that might arise.

Issue 12—What effect will the regulations have on agricultural practices?

Service Response—One practice that may be affected is pesticide use in apple and cherry orchards near the Hine's emerald dragonfly habitat. The Service, in consultation with the Environmental Protection Agency, will need to evaluate the effects of pesticide use on the Hine's emerald dragonfly.

Issue 13—This is the largest land grab in Door County, Wisconsin. Not opposed with preservation measures for the dragonfly, but it amounts to extraterritorial zoning, i.e., control of the use of another person's land without compensation.

Service Response—The Hine's emerald dragonfly is known to occur on six sites in Door County, Wisconsin. Two of those sites are currently managed by the State of Wisconsin, two of those sites are private lands managed for conservation purposes by non-profit agencies, and the remaining two sites are under private ownership. All of the sites represent aquatic habitats that are currently under the jurisdiction of the Federal Clean Water Act and State water quality law, which are intended to protect these aquatic habitats from water quality degradation and activities like dredging or filling. This listing does not change current land ownership patterns and is not likely to create additional constraints on the activities of private land owners. Instead the listing focuses attention on improvements that might be made to existing regulations. The listing will allow the Service to work with other Federal agencies to ensure that their activities do not further jeopardize the continued existence of the Hine's emerald dragonfly.

Summary of Factors Affecting the Species

Section 4(a)(1) of the Act and regulations (50 CFR part 424) promulgated to implement the listing provisions of the Act set forth the procedures for adding species to the Federal lists. A species determined to be an endangered or threatened species may be endangered or threatened due to one or more of the five factors described in Section 4(a)(1). These factors and their application to Hine's emerald dragonfly are as follows:

A. The present or threatened destruction, modification, or curtailment of its habitat or range. Populations of Hine's emerald dragonfly are apparently extirpated from its historic range in Ohio and Indiana (see ''Background''). No new populations were found during a 1991 status survey in Michigan. Although populations have been found in Illinois and Wisconsin, the habitats are restricted and very fragmented.

The greatest threat to the species in Illinois and Wisconsin is habitat destruction and degradation. In Wisconsin's Door County, land development by agricultural, tourist, and recreational interests pose various threats to Hine's emerald dragonfly sites. Pesticide drift and run-off from Door County's apple and cherry orchards is a potential threat. Contaminated groundwater-to-surface recharge and contaminated surface runoff may carry pesticides and other contaminants to the species' sites. Gypsy moth control has been instituted in Door County and the control measures include mass trapping and spraying of *Bacillus thuringensis.* Although detrimental effects of these measures are not presently known, they could affect Hine's emerald dragonfly populations. There is an open highway salt storage area within 100 feet that could affect one Hine's emerald dragonfly stream site in Door County. A solid waste transfer station is being considered for development near another site. Beaver are common in both Door County and Illinois, and their impoundments may possibly alter the microhabitat of the aquatic dragonfly nymphs. Studies will need to be conducted to determine the impacts.

In Illinois, the remaining sites for the Hine's emerald dragonfly are located in Cook, DuPage, and Will Counties. These three counties are in the Chicago metropolitan area and represent the fastest-growing counties in that area. The sites in these counties are already highly fragmented and are further threatened by urban and industrial development. Industrial development in the immediate vicinity of the sites includes a petroleum refinery, a sewage treatment plant, rock quarries, an electrical power plant, and an asphalt plant. These types of facilities have the potential to degrade surface water, ground water, and air quality in the vicinity of Hine's emerald dragonfly sites. Degraded ground water quality is a particular concern because the sites that support the dragonfly receive water from seeps and springs. A proposed quarrying operation that would eliminate an entire population, the proposed highway FAP–340 (an extension of Interstate 355), and other roadway expansion activities in the Hine's emerald dragonfly foraging sites

in Illinois also threaten the species' habitat. A variety of other developments in this rapidly-growing area are in various stages of planning and execution that threaten the dragonfly's habitat.

B. Overutilization for commercial, recreational, scientific, or educational purposes. Overutilization is not believed to be a factor in the species' continued existence, but the Federal protection under the Act will prohibit unauthorized collection of individuals of the species. Protection from collection may become important because collectors may seek the species.

C. Disease or predation. The importance of these factors is presently unknown.

D. The inadequacy of existing regulatory mechanisms. The stream and aquatic habitat of the Hine's emerald dragonfly is within the jurisdiction of the Clean Water Act that established various regulatory mechanisms to protect surface and ground water from the effects of point and non-point discharges. Section 404 of the Clean Water Act, which is administered by the U.S. Army Corps of Engineers in conjunction with the U.S. Environmental Protection Agency, established a regulatory program to protect waters of the United States from the adverse effects of filling. The States of Illinois, Indiana, Ohio, and Wisconsin administer similar programs to protect surface and ground water quality. Despite these Federal and State regulatory mechanisms, the aquatic habitat of the Hine's emerald dragonfly was apparently extirpated in Ohio and Indiana, although the dragonfly may have been extirpated prior to the creation of these programs. Nevertheless, Federal and State regulations appear to be only partially effective in preventing the loss and degradation of the aquatic habitats of the Hine's emerald dragonfly. This listing will enhance the level of protection those aquatic habitats and the dragonfly receive through those programs.

E. Other natural or manmade factors affecting its continued existence. Automobile impact is a threat where sites occur near roadways due to adult dragonflies hovering, and in some areas the dragonflies are known to fly across roadways to reach foraging habitat.

The Service has carefully assessed the best scientific and commercial information available regarding the past, present, and future threats faced by this species in determining this final rule. Based on this evaluation, the preferred action is to list Hine's emerald dragonfly as endangered.

Critical Habitat

Critical habitat is defined in section 3 of the Act as: (i) The specific areas within the geographical area occupied by a species, at the time it is listed in accordance with the Act, on which are found those physical or biological features (I) essential to the conservation of the species and (II) that may require special management considerations or protection and; (ii) specific areas outside the geographical area occupied by a species at the time it is listed, upon a determination that such areas essential for the conservation of the species. ''Conservation'' means the use of all methods and procedures needed to bring the species to the point at which listing under the Act is no longer necessary.

Section 4(a)(3) of the Act, as amended, and implementing regulations (50 CFR 424.12) require that, to the maximum extent prudent and determinable, the Secretary designate critical habitat at the time the species is endangered or threatened. Service regulations (50 CFR 424.12 (a)) state that critical habitat is not determinable if information sufficient to perform required analysis of the impacts of the designation is lacking or if the biological needs of the species are not sufficiently well known to permit identification of an area as critical habitat. Section 4(b)(2) of the Act requires the Service to consider economic and other relevant impacts of designating a particular area as critical habitat on the basis of the best scientific data available. The Secretary may exclude any area from critical habitat if he determines that the benefits of such exclusion outweigh the conservation benefits, unless to do such would result in the extinction of the species.

The Service finds that designation of critical habitat for the Hine's emerald dragonfly is not determinable at this time. When a ''not determinable'' finding is made, the Service must, within two years of the publication date of the original proposed rule, designate critical habitat, unless the designation is found to be not prudent (50 CFR 424.17(b)(2)).

The Service will initiate a concerted effort to obtain the information needed to determine critical habitat for the Hine's emerald dragonfly. Wisconsin Department of Natural Resources is willing to work closely with the Service to conduct studies to evaluate if designation of critical habitat is determinable. A proposed rule for critical habitat designation must be published in the **Federal Register**, and the notification process and public comment provisions parallel those for a species listing. In addition, the Service will evaluate the economic and other relevant impacts of the critical habitat designation, as required under Section 4(b)(2) of the Act.

The presently known populations of this species are located on fragmented and degraded wetland habitats. The size, location, area, spatial configuration, and composition of specific areas essential to the conservation of the Hine's emerald dragonfly or which may require special management considerations or protection cannot be determined without further study.

Available Conservation Measures

Conservation measures provided to species listed as endangered or threatened under the Act include recognition, recovery actions, requirements for Federal protection, and prohibitions against certain practices. Recognition through listing results in public awareness and conservation actions by Federal, State, and local agencies, private organizations, and individuals. The Act provides for possible land acquisition and cooperation with the States and requires that recovery actions be carried out for all listed species. The protection required of Federal agencies and the prohibitions against taking and harm are discussed, in part, below.

Section 7(a) of the Act, as amended, requires Federal agencies to evaluate their actions with respect to any species that is proposed or listed as endangered or threatened and with respect to its critical habitat, if any is being designated. Regulations implementing this interagency cooperation provision of the Act are codified at 50 CFR part 402. Section 7(a)(4) of the Act requires Federal agencies to confer informally with the Service on any action that is likely to jeopardize the continued existence of a proposed species or result in destruction or adverse modification of proposed critical habitat. If a species is listed subsequently, section 7(a)(2) requires Federal agencies to ensure that activities they authorize, fund, or carry out are not likely to jeopardize the continued existence of such a species or to destroy or adversely modify its critical habitat. If a Federal action may affect a listed species or its critical habitat, the responsible Federal agency must enter into formal consultation with the Service.

The Act and implementing regulations found at 50 CFR 17.21 set forth a series of general prohibitions and exceptions that apply to all endangered wildlife. These prohibitions, in part,

make it illegal for any person subject to the jurisdiction of the United States to take (including capture, harass, harm, pursue, hunt, shoot, wound, kill, trap, or collect; or to attempt any of these), import or export, ship in interstate commerce in the course of commercial activity, or sell or offer for sale in interstate or foreign commerce any listed species. It also is illegal to possess, sell, deliver, carry, transport, or ship any such wildlife that has been taken illegally. Certain exceptions apply to agents of the Service and State conservation agencies.

The July 1, 1994, policy of the Service (59 FR 34272) requires identification of those activities that would or would not constitute a violation of section 9 of the Act, to the maximum extent practicable at the time a species is listed. The intent of this policy is to increase public awareness of the effect of the listing on proposed and ongoing activities within a species' range.

The Service believes that, based on the best available information, the following are actions that will not result in a violation of section 9:

(1) Possession of legally acquired Hine's emerald dragonflies; and

(2) Federally approved projects that include, but are not limited to, activities, such as discharge of fill material, draining, ditching, tiling, pond construction, stream channelization or diversion, or diversion or alteration of surface or ground water flow into or out of wetlands (i.e., due to roads, impoundments, discharge pipes, stormwater detention basins, etc.)—when such activity is conducted in accordance with section 7 of the Act.

Activities that the Service believes could potentially harm the Hine's emerald dragonfly and result in ''take'', include, but are not limited to:

(1) Unauthorized collecting or handling of the species;

(2) Unauthorized destruction/alteration of the species' habitat (i.e., discharge of fill material, draining, ditching, tiling, pond construction, stream channelization or diversion, or diversion or alteration or contamination of surface or ground water flow into or out of wetlands (i.e., due to roads, impoundments, discharge pipes, stormwater retention basins, etc.);

(3) Burning, cutting or mowing of wetland vegetation, if conducted in an untimely or inappropriate manner (e.g., when dragonflies would be killed or injured or their occupied habitat would be degraded or rendered unsuitable);

(4) Pesticide application in or near occupied wetland that results in the destruction, alteration or contamination of the species' aquatic habitat;

(5) Herbicide or fertilizer application in or near occupied wetlands that results in the destruction or alteration of existing wetland vegetation—that is, which kills vegetation upon which the Hine's emerald dragonfly depends, or causes nutrient enrichment which encourages the growth of invasive exotic plants;

(6) Discharges or dumping of toxic chemicals, silt, or other pollutants (i.e., sewage, oil and gasoline) into waters used by the species; and

(7) Interstate and foreign commerce (commerce across State and international boundaries) and import/export (as discussed earlier in this section) without prior obtainment of an endangered species permit.

Permits may be issued to carry out otherwise prohibited activities involving endangered wildlife species under certain circumstances. Regulations governing permits are at 50 CFR 17.22 and 17.23. Such permits are available for scientific purposes, to enhance the propagation or survival of the species, and/or for incidental take in connection with otherwise lawful activities.

Questions regarding whether specific activities, such as collecting, burning, mowing or pesticide application, will constitute a violation of section 9 should be directed to the Field supervisor of the appropriate Service, Ecological Services Field office as follows: in Illinois, the Chicago Field Office, 1000 Hart Road, Suite 180, Barrington, Il 60010 (708/381–2253); and, in Wisconsin, the Green Bay Field Office, 1015 Challenger Court, Green Bay, WI 54311 (414/433–3803). Requests for copies of the regulations regarding listed wildlife, and inquiries about prohibitions and permits may be addressed to Chief, Division of Endangered Species (see Addresses section).

The known Hine's emerald dragonfly populations are threatened by a highway project and a proposed quarrying operation in Illinois, and potentially threatened by commercial development and orchard pesticide spraying in Wisconsin. Due to the need to make Federal funding, protection, and other measures immediately available to protect this species and its habitat, the Service finds good cause in accordance with 5 U.S.C. 553 (d)(3), to make this final rule effective upon publication.

National Environmental Policy Act

The Fish and Wildlife Service has determined that Environmental Assessments and Environmental Impact Statements, as defined under the authority of the National Environmental Policy Act of 1969, need not be prepared in connection with regulations adopted pursuant to Section 4(a) of the Act, as amended. A notice outlining the Service's reasons for this determination was published in the **Federal Register** on October 25, 1983 (48 FR 49244).

References Cited

Bick, G.H. 1983. Odonata at Risk in the Conterminous United States and Canada. Odonatologica 12: 209–226.

Cashatt, E.D., and B.G. Sims. 1993. Illinois 1993 Critical Habitat and Recovery Investigations for the Hine's Emerald Dragonfly (*Somatochlora hineana* Williamson). Report prepared for the U.S. Fish and Wildlife Service by the Illinois State Museum, Springfield, IL. 11pp.

Cashatt, E.D., et. al. 1992. Illinois 1992 Critical Habitat and Recovery Investigations for the Hine's Emerald Dragonfly. Report prepared for the U.S. Fish and Wildlife Service by the Illinois State Museum, Springfield, IL. 20pp. + Appendix.

Cashatt, E.D. 1991. A Vulnerable species: The Ohio Emerald Dragonfly. The Living Museum 53(2):29–30.

Cashatt, E.D., and T.E. Vogt. 1990. The Illinois 1990 Status Survey for the Ohio Emerald Dragonfly (*Somatochlora hineana* Williamson). Report prepared for the U.S. Fish and Wildlife Service by the Illinois State Museum, Springfield, IL. 20pp.

Cashatt, E.D., and T.E. Vogt. 1991. The Illinois 1991 Survey for the Hine's Emerald Dragonfly (*Somatochlora hineana* Williamson). Prepared for the U.S. Fish and Wildlife Service by the Illinois State Museum, Springfield, IL, and Wisconsin Department of Natural Resources, Bureau of Endangered Resources, Madison, WI. 13pp.

Montgomery, B.E. 1953. Notes and Records of Indiana Odonata, 1951–1952. Proceeding of the Indiana Academy of Science. 62: 200–202.

Price, H.F. 1958. Additional Notes on the Dragonflies of Northwestern Ohio. Ohio Journal of Science. 58: 50–62.

Smith, W. 1993. Wisconsin Endangered and Threatened Species Investigation. Report prepared for the U.S. Fish and Wildlife Service by the Wisconsin Department of Natural Resources, Bureau of Endangered Species, Madison, WI. 13pp.

Vogt, T.E. 1991. Results of 1991 Status Survey for *Somatochlora hineana* Williamson in Michigan. Report prepared for Michigan Natural Features Inventory, Mason Building, Lansing, Michigan, and the U.S. Fish and Wildlife Service by the Wisconsin Department of Natural Resources, Bureau of Endangered Species, Madison, WI. 24pp.

Vogt, T.E., and E.D. Cashatt. 1990. The 1990 Wisconsin Status Survey for the Ohio Emerald Dragonfly (*Somatochlora hineana* Williamson). Report prepared for the U.S. Fish and Wildlife Service by Wisconsin Department of Natural Resources, Bureau of Endangered Species, Madison, WI. 14pp.

Vogt, T.E., and E.D. Cashatt. 1991. The Wisconsin 1991 Status Survey for the Hine's Emerald Dragonfly (*Somatochlora hineana* Williamson). Report prepared for the U.S. Fish and Wildlife Service by the Wisconsin Department of Natural Resources, Bureau of Endangered Resources, Madison, WI and the Illinois State Museum, Springfield, IL. 11pp.

Williamson, E.B. 1931. A new North American *Somatochlora* (Odonata: Corduliidae). Occasional Papers of the Museum of Zoology. University of Michigan. 225: 1–8.

Author

The primary author of this final rule is Carlita Shumate (see **ADDRESSES** section). This final rule was edited by Amelia Orton-Palmer, U.S. Fish and Wildlife Service, Ecological Services Field Office, 1000 Hart Road, Suite 180, Barrington, Illinois 60010, (708) 381–2253 and Catherine Carnes, U.S. Fish and Wildlife Service, Ecological Services Field Office, 1015 Challenger Court, Green Bay, Wisconsin 54311, (414) 433–3803. Everett D. Cashatt, Zoology Section, Illinois State Museum, Springfield, Illinois 62706, (217) 782–6689 and Timothy E. Vogt, The Nature Conservancy, Rte.1, Box 53E, Ullin, Illinois 62992 (618) 634–9445, provided substantial information.

List of Subjects in 50 CFR Part 17

Endangered and threatened species, Exports, Imports, Reporting and recordkeeping requirements, and Transportation.

Regulation Promulgation

Accordingly, part 17, subchapter B of chapter I, title 50 of the Code of Federal Regulations, is amended as set forth below:

PART 17—[AMENDED]

1. The authority citation for part 17 continues to read as follows:

Authority: 16 U.S.C. 1361–1407; 16 U.S.C. 1531–1544; 16 U.S.C. 4201–4245; Pub L. 99–625, 100 Stat. 3500; unless otherwise noted.

2. Section 17.11(h) is amended by adding the following, in alphabetical order under Insects to the List of Endangered and Threatened Wildlife:

§ 17.11 Endangered and threatened wildlife.

* * * * *

(h) * * *

Species		Historic range	Vertebrate population where endangered or threatened	Status	When listed	Critical habitat	Special rules
Common name	Scientific name						
*	*	*	*	*	*		
INSECTS							
*	*	*	*	*	*		
Hine's emerald (Ohio emerald dragonfly).	*Somatochlora hineana.*	U.S.A. (IL, IN, OH, & WI).	NA	E	573	NA	NA
*	*	*	*	*	*		

Dated: January 6, 1995.

Mollie H. Beattie,

Director, U.S. Fish and Wildlife Service.

[FR Doc. 95–1983 Filed 1–25–95; 8:45 am]

BILLING CODE 4310–55–P

federal register

Thursday
January 26, 1995

Part IV

Department of the Interior

Fish and Wildlife Service

50 CFR Part 32

Open Hunting Areas; Bayou Cocodrie National Wildlife Refuge, Louisiana; Final Rule

DEPARTMENT OF THE INTERIOR

Fish and Wildlide Service

50 CFR Part 32

RIN 1018–AD00

Addition of Bayou Cocodrie National Wildlife Refuge to the List of Open Areas for Hunting in Louisiana

AGENCY: Fish and Wildlife Service, Interior Department.

ACTION: Final rule.

SUMMARY: The U.S. Fish and Wildlife Service (Service) adds Bayou Cocodrie National Wildlife Refuge to the list of areas open for upland game and big game hunting in Louisiana along with pertinent refuge-specific regulations for such activities. The Service has determined that such use will be compatible with the purposes for which the refuge was established. The Service has further determined that this action is in accordance with the provisions of all applicable laws, is consistent with principles of sound wildlife management, and is otherwise in the public interest by providing additional recreational opportunities of a renewable natural resource.

EFFECTIVE DATE: The effective date of this rule is February 27, 1995.

ADDRESSES: Assistant Director—Refuges and Wildlife, U.S. Fish and Wildlife Service, 1849 C Street NW., MS 670 ARLSQ, Washington, DC 20240.

FOR FURTHER INFORMATION CONTACT: Duncan L. Brown, Esq., at the address above; Telephone: 703–358–1744.

SUPPLEMENTARY INFORMATION: National wildlife refuges are generally closed to hunting and sport fishing until opened by rulemaking. The Secretary of the Interior (Secretary) may open refuge areas to hunting and/or fishing upon a determination that such uses are compatible with the purpose(s) for which the refuge was established, and that funds are available for development, operation, and maintenance of a hunting or fishing program. The action must also be in accordance with provisions of all laws applicable to the areas, must be consistent with the principles of sound wildlife management, and must otherwise be in the public interest. This rulemaking opens Bayou Cocodrie National Wildlife Refuge to upland game (squirrel, rabbit, raccoon, opossum and coyote) and big game (white-tailed deer) hunting.

Request for Comments

A proposed rule was published on October 21, 1994 (59 FR 5338) and comments were solicited from the public. No comments were received regarding this opening.

Statutory Authority

The National Wildlife Refuge System Administration Act of 1966, as amended (NWRSAA) (16 U.S.C. 668dd), and the Refuge Recreation Act of 1962 (RRA) (16 U.S.C. 460k) govern the administration and public use of national wildlife refuges. Specifically, Section 4(d)(1)(A) of the NWRSAA authorizes the Secretary to permit the use of any areas within the National Wildlife Refuge System (Refuge System) for any purpose, including but not limited to hunting, fishing, public recreation and accommodations, and access, when he determines that such uses are compatible with the purposes for which each refuge was established. The Service administers the Refuge System on behalf of the Secretary. The RRA gives the Secretary additional authority to administer refuge areas within the Refuge System for public recreation as an appropriate incidental or secondary use only to the extent that it is practicable and not inconsistent with the primary purposes for which the refuges were established. In addition, prior to opening refuges to hunting or fishing under this Act, the Secretary is required to determine that funds are available for the development, operation, and maintenance of the permitted forms of recreation.

Opening Package

In preparation for this opening, the refuge unit has included in its ''openings package'' for Regional review and approval from the Washington Office the following documents: A hunting/fishing plan; an environmental assessment; a Finding of No Significant Impact (FONSI); a Section 7 evaluation or statement, pursuant to the Endangered Species Act, that these openings are not likely to adversely affect a listed species or critical habitat; a letter of concurrence from the affected States; and refuge-specific regulations to administer the hunts. From a review of the totality of these documents, the Secretary has determined that the opening of the Bayou Cocodrie National Wildlife Refuge to upland game and big game hunting is compatible with the principles of sound wildlife management and will otherwise be in the public interest.

In accordance with the NWRSAA and the RRA, the Secretary has also determined that this opening for upland game and big game hunting is compatible and consistent with the primary purposes for which the refuge was established, and that funds are available to administer the programs. A brief description of the hunting program is as follows:

Bayou Cocodrie National Wildlife Refuge

Public Law 101–593, enacted by Congress on November 16, 1990, authorized the establishment of Bayou Cocodrie National Wildlife Refuge (NWR). The refuge is located in Concordia Parish in east central Louisiana. It was established to protect some of the last remaining, least disturbed bottomland hardwoods in the Mississippi River Delta. These forested wetlands represent one of the most valuable and productive wildlife habitat in the southeastern United States. The stated purposes found at 104 Stat. 2957 provide that the refuge purposes are (1) The conservation and enhancement of wetlands; (2) the general wildlife management as a unit of the National Wildlife Refuge System, including management for migratory birds; and (3) for fish and wildlife-oriented recreational activities.

Total refuge acreage is proposed at 17,269 acres, including an 11,230-acre core tract formerly owned by The Nature Conservancy. The remaining 6,039 acres are adjacent, privately-owned tracts. Acquisition to date totals 9,805 acres of the core tract. The area offers attractive shallow-water feeding habitat for pintails and other dabbling ducks such as mallards and blue-winged teal, and provides excellent habitat for resident game, including white-tailed deer, turkeys, woodcock, and grey and fox squirrels. The bottomland hardwoods also serve as both permanent homes and migration habitat for many species of passerine birds, including songbirds and neotropical migrants.

The area has historically been noted for its excellent hunting opportunities for white-tailed deer and small game such as rabbits and squirrels. Nearly all of the refuge area was leased by hunting clubs or commercial hunting enterprises prior to the government obtaining the property. Based on preliminary assessment of the refuge and the experience of the local Louisiana Department of Wildlife and Fisheries biologist and enforcement personnel, all indications support the fact that relevant wildlife populations are sufficient for hunting and for other refuge objectives.

Because of the unpredictable refuge development timeframe, the location of future land purchases, and the limited amount of developed waterfowl habitat, the initial hunting program will involve only resident game including white-

tailed deer, squirrels, and rabbits. A waterfowl hunting program is totally dependent on the capability of being able to have dependable water sources to maintain optimum water levels for waterfowl hunting. Seasons and bag limits for resident game seasons hunting will be within the guidelines established by the Louisiana Department of Wildlife and Fisheries, but will likely be more conservative. The hunting program will be reviewed on an annual basis and revisions will be made accordingly.

The sport hunting program will be monitored by refuge personnel. Currently, the refuge is operating at the ''custodial level'' with only one staff member—the refuge manager. Resources from other refuges (Tensas River, Catahoula, and Lake Ophelia) will be utilized to help administer the hunt programs.

To facilitate the distribution of news releases, the refuge will maintain a mailing list for newspapers, local radio and television stations. News releases will be developed announcing the hunting season dates, where regulations can be obtained, and other pertinent information.

Opening the refuge to upland game and big game hunting has been found to be compatible in a separate compatibility determination. This determination noted that time and zone restrictions would be implemented as land acquisition progressed to ensure continued compatibility. A Section 7 evaluation pursuant to the Endangered Species Act was conducted and it was determined that the hunt opening is not likely to adversely affect any Federally listed or proposed for listing threatened or endangered species or their critical habitats. Pursuant to the National Environmental Policy Act (NEPA), an environmental assessment was made and a Finding of No Significant Impact (FONSI) was made regarding the hunt. Numerous contacts were made throughout the area of the refuge soliciting comments on the hunting plan. The Louisiana Department of Wildlife and Fisheries concurs and fully supports the regulated recreational hunting program at the refuge.

The Service has determined that there would be sufficient funds to administer the hunt pursuant to the requirements of the Refuge Recreation Act. The cost of the hunt program is estimated to be approximately $25,000 for the initial year and $10,000 per year thereafter. Sufficient funds would be available within the refuge unit budget to operate such a hunt. It is estimated, further, that 10,000 hunter visits per year would take place.

Paperwork Reduction Act

The information collection requirements for part 32 are found in 50 CFR part 25 and have been approved by the Office of Management and Budget under 44 U.S.C. 3501 *et seq.* and assigned clearance number 1018–0014. The information is being collected to assist the Service in administering these programs in accordance with statutory authorities which require that recreational uses be compatible with the primary purposes for which the areas were established. The information requested in the application form is required to obtain a benefit.

The public reporting burden for the application form is estimated to average six (6) minutes per response, including time for reviewing instructions, gathering and maintaining data, and completing the form. Direct comments on the burden estimate or any other aspect of this form to the Service Information Collection Officer, U.S. Fish and Wildlife Service, 1849 C Street, NW, MS 224 ARLSQ, Washington, DC 20240; and the Office of Management and Budget, Paperwork Reduction Project (1018–0014), Washington, DC 20503.

Economic Effect

This rulemaking was not subject to Office of Management and Budget review under Executive Order 12866. In addition, a review under the Regulatory Flexibility Act of 1980 (5 U.S.C. 601 *et seq.*) has revealed that the rulemaking would not have a significant effect on a substantial number of small entities, which include businesses, organizations or governmental jurisdictions. This rule would have minimal effect on such entities.

Federalism

This rule will not have substantial direct effects on the States, on the relationship between the national government and the States, or on the distribution of power and responsibilities among the various levels of government. Therefore, in accordance with Executive Order 12612, it is determined that this rule does not have sufficient Federalism implications to warrant the preparation of a Federalism Assessment.

Environmental Considerations

Pursuant to the requirements of section 102(2)(C) of the National Environmental Policy Act of 1969 (42 U.S.C. 4332(2)(C)), an environmental assessment has been prepared for this opening. Based upon the Environmental Assessments, the Service issued a Finding of No Significant Impact with respect to the opening. A Section 7 evaluation was prepared pursuant to the Endangered Species Act with a finding that no adverse impact would occur to any identified threatened or endangered species.

Primary Author

Duncan L. Brown, Esq., Division of Refuges, U.S. Fish and Wildlife Service, Washington, DC, is the primary author of this rulemaking document.

List of Subjects in 50 CFR Part 32

Hunting, Fishing, Reporting and recordkeeping requirements, Wildlife, Wildlife refuges.

Accordingly, part 32 of chapter I of Title 50 of the Code of Federal Regulations is amended as set forth below:

PART 32—[AMENDED]

1. The authority citation for part 32 continues to read as follows:

Authority: 5 U.S.C. 301; 16 U.S.C. 460k, 664, 668dd, and 715i.

2. Section 32.7 List of refuge units open to hunting and/or fishing is amended by adding alphabetically ''Bayou Cocodrie National Wildlife Refuge'' to the listing under the state of Louisiana.

3. Section 32.37 *Louisiana* is amended by adding alphabetically Bayou Cocodrie National Wildlife Refuge to the listing to read as follows:

§ 32.37 Louisiana.

* * * * *

Bayou Cocodrie National Wildlife Refuge

A. Hunting of Migratory Game Birds. [Reserved.]

B. Upland Game Hunting. Hunting of squirrel, rabbit, raccoon, opossum and coyote is permitted on designated areas of the refuge subject to the following condition: Permits are required.

C. Big Game Hunting. Hunting of white-tailed deer is permitted on designated areas of the refuge subject to the following condition: Permits are required.

D. Sport Fishing. [Reserved.]

* * * * *

Dated: December 16, 1994.

George T. Frampton, Jr.,

Assistant Secretary for Fish and Wildlife and Parks.

[FR Doc. 95–1794 Filed 1–25–95; 8:45 am]

BILLING CODE 4310–55–P

federal register

Thursday
January 26, 1995

Part V

Department of Housing and Urban Development

Office of the Assistant Secretary for Housing-Federal Housing Commissioner

24 CFR Part 261

Federally Assisted Low Income Housing Drug Elimination Program; Final Rule

DEPARTMENT OF HOUSING AND URBAN DEVELOPMENT

Office of the Assistant Secretary for Housing-Federal Housing Commissioner

24 CFR Part 261

[Docket No. R–95–1741; FR–3467–F–02]

RIN 2502–AG07

Federally Assisted Low Income Housing Drug Elimination Program

AGENCY: Office of the Assistant Secretary for Housing-Federal Housing Commissioner, HUD.

ACTION: Final rule.

SUMMARY: This final rule implements the Assisted Housing Drug Elimination Program, as authorized by the National Affordable Housing Act and the Housing and Community Development Act of 1992. This program authorizes HUD to make drug elimination grants to owners of federally assisted low-income housing, while previously these grants were only available for public housing agencies and Indian housing authorities. HUD will award these grants for use in eliminating drug-related crime and the problems associated with it.

EFFECTIVE DATE: February 27, 1995.

FOR FURTHER INFORMATION CONTACT: Lessley Wiles, Office of Multifamily Housing Management, Operations Division, Room 6176, Department of Housing and Urban Development, 451 Seventh Street, SW, Washington, DC 20410; telephone (202) 708–2654, or (202) 708–3938 (TDD for speech- or hearing-impaired). (These are not toll free numbers).

SUPPLEMENTARY INFORMATION:

Paperwork Reduction Act Statement

The information collection requirements contained in this rule have been approved by the Office of Management and Budget, under section 3504(h) of the Paperwork Reduction Act of 1980 (44 U.S.C. 3501–3520), and assigned OMB control number 2502–0476.

I. Background

On August 9, 1994 (59 FR 40764), HUD published a proposed rule that would implement the Assisted Housing Drug Elimination Program, as authorized by section 581 of the National Affordable Housing Act (42 U.S.C. 11901–11909) (NAHA), and as amended by section 161 of the Housing and Community Development Act of 1992 (Pub. L. 102–550, approved October 18, 1992) (HCDA 1992). The preamble to the proposed rule contains a detailed explanation of the ways in which NAHA amended the Public Housing Drug Elimination Program, including the addition of authorization to make grants to private, for-profit and nonprofit owners of federally assisted low-income housing for use in eliminating drug-related crime. Section 581 of NAHA also permits HUD to establish other criteria, in addition to those applicable to the Public Housing Drug Elimination Program, for the evaluation of funding applications submitted by owners of federally assisted low-income housing.

HUD solicited public comments on the proposed rule. By the expiration of the public comment period on October 11, 1994, HUD received six comments. HUD carefully considered all the public comments received, and has decided to make no changes from the proposed rule. The following section of the preamble presents a summary of the comments received and HUD's responses to those comments.

II. Public Comment on Proposed Rule

1. Two commenters suggested changes in the selection criteria (§ 261.15(a)). One commenter suggested that HUD should specifically target the elderly and disabled as priority populations due to their special vulnerability. This commenter would change § 261.15(a)(1) of the rule to include the vulnerability of the populations at risk due to the drug-related crimes, as well as the extent of the substance abuse in the applicant's development.

Another commenter suggested that the order of the criteria should be changed to reflect different priorities. This commenter suggested that the first criterion should be the capability of the applicant to carry out the plan, rather than the extent of the drug-related crime problem in the applicant's development. The commenter explained that this would be more effective; while ''there (are) no shortage of serious (drug-related crime) problems, * * * there are too few able organizations with effective plans to make the best use of the meager resources available to combat drugs.'' According to this commenter, the second criterion should be the quality of the plan, the third criterion should be the extent of local participation and involvement, and the fourth criterion should be the extent of the drug-related crime problem.

HUD Response: In the preamble to the proposed rule, HUD specifically invited comments on additional criteria for selecting grant recipients. Section 581 of NAHA requires, however, that additional criteria shall be designed only to reflect—(1) relevant differences between the financial resources and other characteristics of public housing authorities and owners of federally assisted low-income housing, or (2) relevant differences between the problem of drug-related crime in public housing and the problem of drug-related crime in federally assisted low-income housing. The suggestions by the commenters, while having merit, do not reflect these differences as outlined in the statute.

With regard to the priority of the criteria, section 5125(b) of the Anti-Drug Abuse Act of 1988 (42 U.S.C. 11904(b)), which is the authorizing statute for this drug elimination program, specifies the primary selection criteria for grants under this drug elimination program. This rule reflects the criteria in the statute in the order stated.

2. One commenter objected to the fact that alcohol abuse programs will not be eligible for funding under this drug elimination program, due to the specific exclusion of alcohol from the definition of controlled substance in § 261.5. This commenter asserted that ''alcohol is increasingly the prime reason for abuse and other domestic problems encountered in housing developments,'' and that a drug elimination program cannot be effective unless it addresses the problem of alcohol abuse.

HUD Response: HUD cannot include alcohol in the definition of controlled substance in § 261.5 because this definition is statutorily prescribed. Section 5126(1) of the Anti-Drug Abuse Act of 1988 (42 U.S.C. 11905(1)) incorporates the definition of controlled substance as provided in section 102 of the Controlled Substances Act (21 U.S.C. 802). This definition specifically excludes alcohol. Therefore, alcohol abuse programs are not eligible for funding under this drug elimination program.

3. One commenter stated that HUD should not encourage voluntary tenant patrols as an eligible activity (§ 261.10(b)(5)), because they pose an unacceptable risk of harm to residents where drug-related crime is at very serious levels. This commenter explained that while tenant patrols may be appropriate in areas with mild crime problems, these areas are less likely to receive grant awards under this program.

HUD Response: HUD does not encourage the use of tenant patrols. The inclusion of tenant patrols as an eligible activity, however, is statutorily prescribed in section 5124(5) of the Anti-Drug Abuse Act of 1988 (42 U.S.C. 11903(5)).

4. One commenter proposed that, in keeping with HUD's comprehensive approach to solving drug-related crime problems, HUD should include the provision of new community space as an eligible activity in § 261.10(b) of the rule. This commenter suggested that to be eligible for funding, the applicant would have to meet the following conditions: (1) Absence of space on-site; (2) Absence of alternative space off-site; (3) HUD concurs to either the creation of new space or taking a unit off-line for this purpose; (4) The space must be provided in turn-key condition within three months of the first drawdown of funds; and (5) The applicant must specify a social program, whether existing or fundable through the grant, to accompany the request for new space. This commenter noted that previous grants have been used to refurbish existing community space.

HUD Response: Given the costs of construction and the limited amount of funds available under this drug elimination program, HUD is not encouraging the construction of new buildings. Rental or leasing of space near the property, where activities such as classes and counseling sessions can take place, would be a preferred option. However, HUD has permitted the retrofitting of existing available space as an eligible physical improvement, provided no units are taken off-line. HUD also permitted the siting of a surplussed mobile classroom to provide the needed space, since this involved minimal cost.

5. One commenter raised two concerns about the selection process for the drug elimination grant proposals. First, the commenter asserted that proposals are not judged on the basis of need, but on the quantity of information provided by the applicant. Specifically, this commenter asserted that applications from areas of high drug-related crime have lost points for ''lack of crime statistics.'' The commenter stated that the lack of such data should not be a hindrance in determining eligibility for a grant, and that other support documentation should be considered if such data is not available.

Second, this commenter expressed concern about unintentional geographic bias in awarding grants under drug elimination programs. The commenter suggested that the panel reviewing the grant applications should consist of individuals from geographically diverse areas in order to avoid this bias.

HUD Response: In response to the first concern, there have been allegations in the past that HUD awarded drug grants to public housing projects with no evidence of drug-related criminal activity. Therefore, obtaining specific statistics on the extent of this activity is necessary to assure that the problems to be addressed by this program do, in fact, exist.

In response to the second concern about geographical bias, local HUD offices will review and score applications for the Federal fiscal year (FY) 1995 drug elimination grants. The funding, based on scores received, will take place at geographically disbursed sites. This should reduce the possibility of bias in project funding selections.

6. Two commenters expressed concern with the way the rule would apply to an applicant seeking funding for a multi-year project. One commenter encouraged HUD to streamline the application process for applicants seeking funds for a continuing program activity. The rule provides that applicants for grants to continue current program activities may apply on the same basis as other applicants (§ 261.10(b)(7)). This commenter remarked that this process is burdensome, and that ''HUD offices will effectively be discouraged from awarding continuation funds.'' In the alternative, this commenter suggested that HUD make funding for subsequent years conditional upon: (1) the property's first year score being sufficient to earn an award in the following year; and (2) confirmation from the HUD drug grant coordinator that the property is in compliance with the requirements of previously received grant funds.

The other commenter suggested changing the grant term provisions in § 261.26(b) to allow for initial one-year terms, with second- and third-year extensions. This would allow the grantee to undertake ''ambitious plans without the additional concern of searching for additional funding'' early in the program. This commenter further argued that a longer term would encourage outside funding, since the potential funder would have more of a performance record on which to base its determination.

HUD Response: HUD's Office of Housing has no assurance that it will receive funds for more than one year. Consequently, the program can only permit funding for one year. In addition, due to the limitation on the amount of funds available in any given year, HUD's goal is to spread the funds as far as possible and give all eligible applicants a fair chance of receiving funding. Therefore, each grant application must stand alone, without any assumption of additional funding, as both commenters suggested.

7. One commenter argued that the maximum grant amount would have to be increased. This commenter remarked that while security personnel are eligible for funding under this drug elimination program, the only effective approach would be to hire off-duty police. According to the commenter, an off-duty police patrol would cost approximately $200,000 per year (two patrol officers at $15 per hour; two 8-hour shifts per weekday, three 8-hour shifts on weekends), which may exceed the maximum grant amount.

HUD Response: HUD does not encourage hiring off-duty police; rather, it hopes to find other solutions to drug-related criminal problems that are more cost-effective. As mentioned above, the limited amount of money available forces HUD and the applicants to seek maximum benefit from limited funds.

III. Other Matters

Environmental Impact

At the time of the development of the proposed rule, a Finding of No Significant Impact with respect to the environment was made in accordance with HUD's regulations at 24 CFR part 50, which implement section 102(2)(C) of the National Environmental Policy Act of 1969 (42 U.S.C. 4332). The Finding of No Significant Impact remains applicable to this final rule and is available for public inspection between 7:30 a.m. and 5:30 p.m. weekdays in the Office of the Rules Docket Clerk, Room 10276, Department of Housing and Urban Development, 451 Seventh Street, SW, Washington, DC 20410.

Regulatory Flexibility Act

The Secretary, in accordance with the Regulatory Flexibility Act (5 U.S.C. 605(b)), has reviewed this rule before publication and by approving it certifies that this rule does not have a significant economic impact on a substantial number of small entities. The rule provides grants to eliminate drug-related crime in federally assisted low-income housing. Although small entities in the form of owners of federally assisted low-income housing could participate in the program, the rule is not intended to and would not have a significant economic impact on them.

Family

The General Counsel, as the Designated Official under Executive Order 12606, *The Family*, has determined that this rule has the potential for a positive, although indirect, impact on family formation, maintenance, and general well-being.

The rule implements a program that encourages owners of federally assisted low-income housing to develop a plan for addressing the problem of drug-related crime, and makes available grants to carry out this plan. As such, the program is intended to improve the quality of life of federally assisted low-income housing residents, including families, by reducing the incidence of drug-related crime. Accordingly, since any impact on the family from the rule will be positive, no further review is considered necessary.

Federalism

The General Counsel, as the Designated Official under section 6(a) of Executive Order 12612, *Federalism*, has determined that the policies contained in this rule will not have substantial direct effects on States or their political subdivisions, or the relationship between the Federal government and the States, or on the distribution of power and responsibilities among the various levels of government. As a result, the rule is not subject to review under the Order. The program helps combat serious drug-related crime problems in federally assisted low-income housing. The rule generally tracks the statute and involves little implementing discretion.

Regulatory Agenda

The rule was listed as Item No. 1765 in HUD's Semiannual Agenda of Regulations published on November 14, 1994 (59 FR 57632, 57634) in accordance with Executive Order 12866 and the Regulatory Flexibility Act.

Catalog of Federal Domestic Assistance

The program number for this Assisted Housing Drug Elimination Program is 14.854.

List of Subjects in 24 CFR Part 261

Drug abuse, Drug traffic control, Grant programs—housing and community development, Grant programs—low and moderate income housing, Reporting and recordkeeping requirements.

Accordingly, part 261, consisting of §§ 261.1 through 261.29, is added to 24 CFR chapter II, as follows:

PART 261—ASSISTED HOUSING DRUG ELIMINATION PROGRAM

Subpart A—General

Sec.
261.1 Purpose and scope.
261.5 Definitions.

Subpart B—Use of Grant Funds

261.10 Applicants and activities.

Subpart C—Application and Selection

261.15 Application selection and requirements.
261.18 Resident comments on grant application.

Subpart D—Grant Administration

261.26 Grant administration.
261.28 Grantee reports.
261.29 Other federal requirements.

Authority: 42 U.S.C. 3535(d) and 11901 *et seq.*

Subpart A—General

§ 261.1 Purpose and scope.

The purposes of the Assisted Housing Drug Elimination Program are to:

(a) Eliminate drug-related crime and the problems associated with it in and around the premises of federally assisted low-income housing;

(b) Encourage owners of federally assisted low-income housing to develop a plan that includes initiatives that can be sustained over a period of several years for addressing drug-related crime and the problems associated with it in and around the premises of assisted housing proposed for funding under this part; and

(c) Make available federal grants to help owners of federally assisted low-income housing carry out their plans.

§ 261.5 Definitions.

Act means The United States Housing Act of 1937 (42 U.S.C. 1437 *et seq.).*

Chief executive officer of a State or a unit of general local government means the elected official, or the legally designated official, who has the primary responsibility for the conduct of that entity's governmental affairs. Examples of the ''chief executive officer'' of a unit of general local government are: The elected mayor of a municipality; the elected county executive of a county; the chairperson of a county commission or board in a county that has no elected county executive; or the official designated pursuant to law by the governing body of the unit of general local government. The chief executive officer of an Indian tribe is the tribal governing official.

Controlled substance means a drug or other substance or immediate precursor included in schedule I, II, III, IV, or V of section 102 of the Controlled Substances Act (21 U.S.C. 802). The term does not include distilled spirits, wine, malt beverages, or tobacco as those terms are defined in Subtitle E of the Internal Revenue Code of 1954.

Drug intervention means a process to identify assisted housing resident drug users and assist them in modifying their behavior and/or refer them to drug treatment to eliminate drug abuse.

Drug prevention means a process to provide goods and services designed to alter factors, including activities, environmental influences, risks, and expectations, that lead to drug abuse.

Drug-related crime means the illegal manufacture, sale, distribution, use, or possession with intent to manufacture, sell, distribute, or use, a controlled substance.

Drug treatment means a program for the residents of an applicant's development that strives to end drug abuse and to eliminate its negative effects through rehabilitation and relapse prevention.

Federally assisted low-income housing (includes the term ''assisted housing'' as used in this rule) means housing assisted under:

(1) Section 221(d)(3), section 221(d)(4) or 236 of the National Housing Act (12 U.S.C. 1701 *et seq.)* (Note: However, section 221(d)(4) and section 221(d)(3) market rate projects without project-based assistance contracts are not considered federally assisted low-income housing. Therefore, section 221(d)(4) and section 221(d)(3) market rate projects with tenant-based assistance contracts are not considered federally assisted low-income housing and are not eligible for funding.);

(2) Section 101 of the Housing and Urban Development Act of 1965 (12 U.S.C. 1701s); or

(3) Section 8 of the United States Housing Act of 1937 (42 U.S.C. 1437f note) (not including tenant-based assistance).

Governmental jurisdiction means the unit of general local government, State, or area of operation of an Indian tribe in which the housing development administered by the applicant is located.

HUD or *Department* means the United States Department of Housing and Urban Development.

In and around means within, or adjacent to, the physical boundaries of a housing development.

Local law enforcement agency means a police department, sheriff's office, or other entity of the governmental jurisdiction that has law enforcement responsibilities for the community at large, including the housing developments owned by the applicant.

Problems associated with drug-related crime means the negative physical, social, educational and economic impact of drug-related crime on assisted housing residents, and the deterioration of the assisted housing environment because of drug-related crime.

Resident Organization (RO) means an incorporated or unincorporated nonprofit organization or association that meets each of the following requirements:

(1) It must be representative of the residents it purports to represent;

(2) It may represent residents in more than one housing development, but it must fairly represent residents from each development that it represents;

(3) It must adopt written procedures providing for the election of specific officers on a regular basis (but at least once every three years); and

(4) It must have a democratically elected governing board. The voting membership of the board must consist of residents of the development or developments that the resident organization represents.

Single State Agency means an agency responsible for licensing and monitoring State or tribal drug abuse programs.

State means any of the several States of the United States, the District of Columbia, the Commonwealth of Puerto Rico, any territory or possession of the United States, or any agency or instrumentality of a State exclusive of local governments. The term does not include any public or Indian housing agency under the United States Housing Act of 1937.

Unit of general local government means any city, county, town, municipality, township, parish, village, local public authority or other general purpose political subdivision of a State.

Subpart B—Use of Grant Funds

§ 261.10 Applicants and activities.

Applicants and activities eligible for funding under the Assisted Housing Drug Elimination Program are listed in this section. The applicants and activities eligible under any particular funding round may be limited in a Notice of Funding Availability (NOFA) published in the **Federal Register**. Additional details concerning eligible and ineligible applicants and activities will also be published in the NOFAs for this program.

(a) *Eligible applicants.* The applicant must be the owner of a federally assisted low-income housing project under:

(1) Section 221(d)(3), section 221(d)(4) or 236 of the National Housing Act (Note: However, section 221(d)(4) and section 221(d)(3) market rate projects without project-based assistance contracts are not considered federally assisted low-income housing. Therefore, section 221(d)(4) and section 221(d)(3) market rate projects with tenant-based assistance contracts are not considered federally assisted low-income housing and are not eligible for funding.);

(2) Section 101 of the Housing and Urban Development Act of 1965; or

(3) Section 8 of the United States Housing Act of 1937 (not including tenant-based assistance).

(b) *Eligible activities.* An application for funding under this program may be for one or more of the following eligible activities, as further specified in program NOFAs:

(1) Employment of security personnel.

(2) Reimbursement of local law enforcement agencies for additional security and protective services.

(3) Physical improvements to enhance security.

(4) Employment of one or more individuals:

(i) To investigate drug-related crime, and the problems associated with it, on or about the real property comprising any federally assisted low-income housing project; and

(ii) To provide evidence relating to such crime in any administrative or judicial proceeding.

(5) The provision of training, communications equipment, and other related equipment for use by voluntary tenant patrols acting in cooperation with local law enforcement officials.

(6) Drug-abuse prevention, intervention and treatment programs to reduce the use of drugs.

(7) *Continuation of current program activities.* Current or previous Assisted Housing Drug Elimination Program grant recipients who are eligible under § 261.10(a) of this subpart may apply, on the same basis as other applicants, for grants to continue their grant activities or implement other program activities. The Department will evaluate an applicant's performance under any previous Drug Elimination Program grants within the past five years. Subject to evaluation and review are the applicant's financial and program performance; reporting and special condition compliance; accomplishment of stated goals and objectives under the previous grant; and program adjustments made in response to previous ineffective performance. If the evaluation discloses a pattern under past grants of ineffective performances with no corrective measures attempted, it will result in a deduction of points from the current application. Since this is a competitive program, HUD does not guarantee continued funding of any previously funded Drug Elimination Program grant.

Subpart C—Application and Selection

§ 261.15 Application selection and requirements.

(a) *Selection criteria.* HUD will review each application that it determines meets the requirements of this part and assign points in accordance with the selection criteria. The number of points that an application receives will depend on the extent to which the application is responsive to the information requested in Notices of Funding Availability (NOFAs) published for this program. Each application submitted for a grant under this part will be evaluated on the basis of the following selection criteria:

(1) First criterion: The extent of the drug-related crime problem in the applicant's development or developments proposed for assistance.

(2) Second criterion: The quality of the plan to address the crime problem in the developments proposed for assistance, including the extent to which the plan includes initiatives that can be sustained over a period of several years.

(3) Third criterion: The capability of the applicant to carry out the plan.

(4) Fourth criterion: The extent to which tenants, the local government and the local community support and participate in the design and implementation of the activities proposed to be funded under the application.

(b) *Plan requirement.* Each application must include a plan for addressing the problem of drug-related crime and the problems associated with drug-related crime on the premises of the housing for which the application is being submitted. For applications that cover more than one housing development, the plan does not have to address each development separately if the same activities will apply to each development. Only where program activities will differ from one development to another must the plan address each development separately.

(c) *Notice of Funding Availability.* HUD will publish Notices of Funding Availability (NOFAs) in the **Federal Register**, as appropriate, to inform the public of the availability of grant amounts under this part. NOFAs will provide specific guidance with respect to the grant process, including the deadlines for the submission of grant applications; the limits (if any) on maximum grant amounts; the eligible applicants and activities; the information that must be submitted to permit HUD to score each of the selection criteria; the maximum number of points to be awarded for each

selection criterion; the contents of the plan for addressing the problem of drug-related crime that must be included with the application; the listing of any certifications and assurances that must be submitted with the application; and the process for ranking and selecting applicants. NOFAs will also include any additional information, factors, and requirements that the Department has determined to be necessary and appropriate to provide for the implementation and administration of the program under this part.

(Approved by the Office of Management and Budget under control number 2502–0476.)

(d) *Environmental review.* Grants under this part are categorically excluded from review under the National Environmental Policy Act of 1969 (NEPA)(42 U.S.C. 4321), in accordance with 24 CFR 50.20(p). However, prior to an award of grant funds under this part, HUD will perform an environmental review to the extent required by HUD's environmental regulations at 24 CFR part 50, including the applicable related authorities at 24 CFR 50.4.

§ 261.18 Resident comments on grant application.

The applicant must provide the residents of developments proposed for funding under this part, as well as any resident organizations that represent those residents, with a reasonable opportunity to comment on its application for funding under this program. The applicant must give these comments careful consideration in developing its plan and application as well as in the implementation of funded programs. Copies of all written comments submitted must be maintained by the grantee for three years.

Subpart D—Grant Administration

§ 261.26 Grant administration.

(a) *General.* Each grantee is responsible for ensuring that grant funds are administered in accordance with the requirements of this part, any Notice of Funding Availability (NOFA) issued for this program, 24 CFR part 85, applicable laws and regulations, applicable OMB circulars, HUD fiscal and audit controls, grant agreements, grant special conditions, the grantee's approved budget (SF–424A), budget narrative, plan, and activity timetable.

(b) *Grant term extensions.*—(1) *Grant term.* Terms of the grant agreement may not exceed 12 months, unless an extension is approved by the local HUD Office. The maximum extension allowable for any grant is 6 months. Any funds not expended at the end of the grant term shall be remitted to HUD.

(2) *Extension.* Grantees may be granted an extension of the grant term in response to a written request for an extension stating the need for the extension and indicating the additional time required.

(3) *Receipt.* The request must be received by the local HUD Office before the termination of the grant, and requires approval by the local HUD Office with jurisdiction over the grantee.

(4) *Term.* The maximum extension allowable for any program period is 6 months. Requests for retroactive extension of program periods will not be considered. Only one extension will be permitted. Extensions will only be considered if the extension criteria of paragraph (b)(5) of this section are met by the grantee at the time the request for the extension of the deadline is submitted for approval.

(5) *Extension criteria.* The following criteria must be met by the grantee when submitting a request to extend the expenditure deadline for a program or set of programs.

(i) *Financial status reports.* There must be on file with the local HUD Office current and acceptable Financial Status Reports, SF–269As.

(ii) *Grant agreement special conditions.* All grant agreement special conditions must be satisfied except those conditions that must be fulfilled in the remaining period of the grant. This also includes the performance and resolution of audit findings in a timely manner.

(iii) *Justification.* A narrative justification must be submitted with the program extension request. Complete details must be provided, including the circumstances which require the proposed extension, and explanation of the impact of denying the request.

(6) *HUD action.* The local HUD Office will attempt to take action on an extension request within 15 working days after receipt of the request.

(c) *Duplication of funds.* To prevent duplicate funding of any activity, the grantee must establish controls to assure that an activity or program that is funded by other HUD programs, or programs of other Federal agencies, shall not also be funded by the Drug Elimination Program. The grantee must establish an auditable system to provide adequate accountability for funds that it has been awarded. The grantee is responsible for ensuring that there is no duplication of funds.

(d) *Insurance.* Each grantee is required to obtain adequate insurance coverage to protect itself against any potential liability arising out of the eligible activities under this part. In particular, applicants are required to assess their potential liability arising out of the employment or contracting of security personnel, law enforcement personnel, investigators, and drug treatment providers, and the establishment of voluntary tenant patrols; to evaluate the qualifications and training of the individuals or firms undertaking these functions; and to consider any limitations on liability under State or local law. Grantees are required to obtain liability insurance to protect the members of the voluntary tenant patrol against potential liability as a result of the patrol's activities under § 261.10(b)(5). Voluntary tenant patrol liability insurance costs are eligible program expenses. Subgrantees are required to obtain their own liability insurance.

(e) *Failure to implement program.* If the grant plan, approved budget and timetable, as described in the approved application, are not operational within 60 days of the grant agreement date, the grantee must report by letter to the local HUD Office the steps being taken to initiate the plan and timetable, the reason for the delay, and the expected starting date. Any timetable revisions which resulted from the delay must be included. The local HUD Office will determine if the delay is acceptable, approve/disapprove the revised plan and timetable, and take any additional appropriate action.

(f) *Sanctions.* (1) HUD may impose sanctions if the grantee:

(i) Is not complying with the requirements of this part or of other applicable Federal law;

(ii) Fails to make satisfactory progress toward its drug elimination goals, as specified in its plan and as reflected in its performance and financial status reports under § 261.28;

(iii) Does not establish procedures that will minimize the time elapsing between drawdowns and disbursements;

(iv) Does not adhere to grant agreement requirements or special conditions;

(v) Proposes substantial plan changes to the extent that, if originally submitted, would have resulted in the application not being selected for funding;

(vi) Engages in the improper award or administration of grant subcontracts;

(vii) Does not submit reports; or

(viii) Files a false certification.

(2) HUD may impose the following sanctions:

(i) Temporarily withhold cash payments pending correction of the deficiency by the grantee or subgrantee;

(ii) Disallow all or part of the cost of the activity or action not in compliance;

(iii) Wholly or partly suspend or terminate the current award for the grantee's or subgrantee's program;

(iv) Require that some or all of the grant amounts be remitted to HUD;

(v) Condition a future grant and elect not to provide future grant funds to the grantee until appropriate actions are taken to ensure compliance;

(vi) Withhold further awards for the program; or

(vii) Take other remedies that may be legally available.

(Approved by the Office of Management and Budget under control number 2502–0476).

§ 261.28 Grantee reports.

Grantees are responsible for managing the day-to-day operations of grant and subgrant supported activities. Grantees must monitor grant and subgrant supported activities to assure compliance with applicable Federal requirements and that performance goals are being achieved. Grantee monitoring must cover each program, function, or activity of the grant.

(a) *Final performance report*—(1) *Evaluation*. Grantees are required to provide the local HUD Office with a final cumulative performance report that evaluates the grantee's overall performance against its plan. This report shall include in summary form (but is not limited to) the following: Any change or lack of change in crime statistics or other indicators drawn from the applicant's plan assessment (such as vandalism, etc.) and an explanation of any difference; successful completion of any of the strategy components identified in the applicant's plan; a discussion of any problems encountered in implementing the plan and how they were addressed; an evaluation of whether the rate of progress meets expectations; a discussion of the grantee's efforts in encouraging resident participation; and a description of any other programs that may have been initiated, expanded or deleted as a result of the plan, with an identification of the resources and the number of people involved in the programs and their relation to the plan.

(2) *Reporting period*. The final performance report shall cover the period from the date of the grant agreement to the termination date of the grant agreement. The report is due to the local HUD Office within 90 days after termination of the grant agreement.

(b) *Semi-annual financial status reporting requirements*—(1) *Form*. The grantee shall provide a semi-annual financial status report. The grantee shall use the SF–269A, Financial Status Report—Long Form, to report the status of funds for nonconstruction programs. The grantee shall use SF–269A, Block 12, ''Remarks,'' to report on the status of programs, functions, or activities within the program.

(2) *Reporting period*. Semi-annual financial status reports (SF–269A) covering the first 180 days of funded activities must be submitted to the local HUD Office between 190 and 210 days after the date of the grant agreement. If the SF–269A is not received on or before the due date (210 days after the date of the grant agreement) by the local HUD Office, grant funds will not be advanced until the reports are received.

(c) *Final financial status report (SF–269A)*—(1) *Cumulative summary*. The final report will be a cumulative summary of expenditures to date and must indicate the exact balance of unexpended funds. The grantee must remit all Drug Elimination Program funds (including any unexpended funds) owed to HUD within 90 days after the termination of the grant agreement.

(2) *Reporting period*. The final financial status report shall cover the period from the date of the grant agreement to the termination date of the grant agreement. The report is due to the local HUD Office within 90 days after the termination of the grant agreement.

(d) *Report submission*. The grantee shall submit all required reports to the local HUD Office.

(Approved by the Office of Management and Budget under control number 2502–0476).

§ 261.29 Other federal requirements.

Use of grant funds requires compliance with the following additional Federal requirements:

(a) *Labor standards*. (1) Where grant funds are used to undertake physical improvements to increase security under § 261.10(b)(3), the following labor standards apply:

(i) The grantee and its contractors and subcontractors must pay the following prevailing wage rates, and must comply with all related rules, regulations and requirements:

(A) For laborers and mechanics employed in the program, the wage rate determined by the Secretary of Labor pursuant to the Davis-Bacon Act (40 U.S.C. 276a et seq.) to be prevailing in the locality with respect to such trades;

(B) For laborers and mechanics employed in carrying out non-routine maintenance in the program, the HUD-determined prevailing wage rate. As used in this paragraph (a), non-routine maintenance means work items that ordinarily would be performed on a regular basis in the course of upkeep of a property, but have become substantial in scope because they have been put off, and that involve expenditures that would otherwise materially distort the level trend of maintenance expenses. Non-routine maintenance may include replacement of equipment and materials rendered unsatisfactory because of normal wear and tear by items of substantially the same kind. Work that constitutes reconstruction, a substantial improvement in the quality or kind of original equipment and materials, or remodeling that alters the nature or type of housing units is not non-routine maintenance.

(ii) The employment of laborers and mechanics is subject to the provisions of the Contract Work Hours and Safety Standards Act (40 U.S.C. 327–333).

(2) The provisions of paragraph (a)(1) of this section shall not apply to labor contributed under the following circumstances:

(i) Upon the request of any resident organization, HUD may, subject to applicable collective bargaining agreements, permit residents to volunteer a portion of their labor;

(ii) An individual may volunteer to perform services if:

(A) The individual does not receive compensation for the voluntary services, or is paid expenses, reasonable benefits, or a nominal fee for voluntary services; and

(B) Is not otherwise employed at any time in the work subject to paragraph (a)(1)(i) (A) or (B) of this section.

(b) *Nondiscrimination and equal opportunity*. The following nondiscrimination and equal opportunity requirements apply to this program:

(1) The requirements of The Fair Housing Act (42 U.S.C. 3601–19) and implementing regulations issued at 24 CFR part 100; Executive Order 11063 (Equal Opportunity in Housing) and implementing regulations at 24 CFR part 107; and Title VI of the Civil Rights Act of 1964 (42 U.S.C. 2000d–2000d–4) (Nondiscrimination in Federally Assisted Programs) and implementing regulations issued at 24 CFR part 1;

(2) The prohibitions against discrimination on the basis of age under the Age Discrimination Act of 1975 (42 U.S.C. 6101–07) and implementing regulations at 24 CFR part 146, and the prohibitions against discrimination against handicapped individuals under section 504 of the Rehabilitation Act of 1973 (29 U.S.C. 794) and implementing regulations at 24 CFR part 8;

(3) The requirements of Executive Order 11246 (Equal Employment Opportunity) and the regulations issued under the Order at 41 CFR chapter 60;

(4) The requirements of section 3 of the Housing and Urban Development Act of 1968 (12 U.S.C. 1701u) (Employment Opportunities for Lower Income Persons in Connection with Assisted Projects); and implementing regulations at 24 CFR part 135; and

(5) The requirements of Executive Orders 11625, 12432, and 12138. Consistent with HUD's responsibilities under these Orders, recipients must make efforts to encourage the use of minority and women's business enterprises in connection with funded activities.

(c) *Use of debarred, suspended, or ineligible contractors.* Use of grant funds under this program requires compliance with the provisions of 24 CFR part 24 relating to the employment, engagement of services, awarding of contracts, or funding of any contractors or subcontractors during any period of debarment, suspension, or placement in ineligibility status.

(d) *Flood insurance.* Grants will not be awarded for proposed activities that involve acquisition, construction, reconstruction, repair, or improvement of a building or mobile home located in an area that has been identified by the Federal Emergency Management Agency (FEMA) as having special flood hazards unless:

(1) The community in which the area is situated is participating in the National Flood Insurance Program in accordance with 44 CFR parts 59–79; or

(2) Less than a year has passed since FEMA notification to the community regarding such hazards; and

(3) Flood insurance on the structure is obtained in accordance with section 102(a) of the Flood Disaster Protection Act of 1973 (42 U.S.C. 4001).

(e) *Lead-based paint.* The provisions of section 302 of the Lead-Based Paint Poisoning Prevention Act (42 U.S.C. 4821–4846) and implementing regulations at 24 CFR part 965, subpart H (51 FR 27789–27791, August 1, 1986) apply to activities under this program as set out below. This section is promulgated pursuant to the authority granted in 24 CFR 35.24(b)(4) and supersedes, with respect to all housing to which it applies, the requirements (not including definitions) prescribed by subpart C of 24 CFR part 35.

(1) *Applicability.* The provisions of this section shall apply to all housing constructed or substantially rehabilitated before January 1, 1978, and for which assistance under this part is being used for physical improvements to enhance security under § 261.10(b)(3).

(2) *Definitions.* The term *applicable surfaces* means all intact and nonintact interior and exterior painted surfaces of a residential structure.

(3) *Exceptions.* The following activities are not covered by this section:

(i) Installation of security devices;

(ii) Other similar types of single-purpose programs that do not involve physical repairs or remodeling of applicable surfaces of residential structures; or

(iii) Any non-single purpose rehabilitation that does not involve applicable surfaces and that does not exceed $3,000 per unit.

(f) *Conflicts of interest.* No person, as described in paragraphs (f)(1) and (2) of this section, may obtain a personal or financial interest or benefit from an activity funded under this program, or have an interest in any contract, subcontract, or agreement with respect thereto, or the proceeds thereunder, either for him or herself or for those with whom he or she has family or business ties, during his or her tenure, or for one year thereafter:

(1) Who is an employee, agent, consultant, officer, or elected or appointed official of the grantee that receives assistance under the program and who exercises or has exercised any functions or responsibilities with respect to assisted activities; or

(2) Who is in a position to participate in a decision making process or gain inside information with regard to such activities.

(g) *Drug Free Workplace Act of 1988.* The requirements of the Drug-Free Workplace Act of 1988 at 24 CFR part 24, subpart F apply to this program.

(h) *Anti-lobbying provisions under section 319.* The use of funds under this part is subject to the disclosure requirements and prohibitions of section 319 of the Department of the Interior and Related Agencies Appropriations Act for Fiscal Year 1990 (31 U.S.C. 1352), and implementing regulations at 24 CFR part 87. These authorities prohibit recipients and subrecipients of Federal contracts, grants, cooperative agreements, and loans from using appropriated funds for lobbying the Executive or Legislative Branches of the Federal Government in connection with a specific contract, grant, or loan. The prohibition also covers the awarding of contracts, grants, cooperative agreements, or loans unless the recipient has made an acceptable certification regarding lobbying. Under 24 CFR part 87, applicants, recipients, and subrecipients of assistance exceeding $100,000 must certify that no Federal funds have been or will be spent on lobbying activities in connection with the assistance. However, since grantees sometimes may expect to receive additional grant funds through reallocations, all potential grantees are required to submit the certification, and to make the required disclosure if the grant amount exceeds $100,000. The law provides substantial monetary penalties for failure to file the required certification or disclosure.

(i) *Intergovernmental review.* The requirements of Executive Order 12372 and the regulations issued under the order at 24 CFR part 52, to the extent provided by **Federal Register** notice in accordance with 24 CFR 52.3 apply to this program.

Dated: January 19, 1995.

Nicolas P. Retsinas,

Assistant Secretary for Housing—Federal Housing Commissioner.

[FR Doc. 95–1932 Filed 1–25–95; 8:45 am]

BILLING CODE 4210–27–P

federal register

Thursday
January 26, 1995

Part VI

Department of Agriculture

Animal and Plant Health Inspection Service

7 CFR Part 335

Plant Pests: Introduction of Nonindigenous Organisms: Proposed Rule

DEPARTMENT OF AGRICULTURE

Animal and Plant Health Inspection Service

7 CFR Part 335

[Docket No. 93–026–1]

RIN 0579–AA61

Introduction of Nonindigenous Organisms

AGENCY: Animal and Plant Health Inspection Service, USDA.

ACTION: Proposed rule and notice of public hearings.

SUMMARY: We are proposing to establish comprehensive regulations governing the introduction (importation, interstate movement, and release into the environment) of certain nonindigenous organisms. This action appears to be necessary because the plant pest regulations under which the movement of certain nonindigenous organisms are currently regulated do not adequately address the introduction of nonindigenous organisms that may potentially be plant pests. The proposed regulations would provide a means of screening certain nonindigenous organisms prior to their introduction to determine the potential plant pest risk associated with a particular introduction.

DATES: Consideration will be given only to comments received on or before March 27, 1995. We will also consider comments made at public hearings to be held on March 6, 1995, in Kansas City, MO; March 7, 1995, in Sacramento, CA; and March 10, 1995, in Washington, DC. Each public hearing will begin at 10 a.m. and is scheduled to end at 5:00 p.m.

ADDRESSES: Please send an original and three copies of your comments to Chief, Regulatory Analysis and Development, PPD, APHIS, USDA, P.O. Drawer 810, Riverdale, MD 20738. Please state that your comments refer to Docket No. 93–026–1. Comments received may be inspected at USDA, room 1141, South Building, 14th Street and Independence Avenue SW., Washington, DC, between 8 a.m. and 4:30 p.m., Monday through Friday, except holidays. Persons wishing to inspect comments are requested to call ahead on (202) 690–2817 to facilitate entry into the comment reading room. The public hearings will be held at the following locations:

1. Kansas City: Kansas City Airport Marriott, 775 Brasilia Avenue, Kansas City, MO;
2. Sacramento: Holiday Inn Holidome, 5321 Date Avenue, Sacramento, CA;
3. Washington, DC: Jefferson Auditorium, U.S. Department of Agriculture, South Building, 14th Street and Independence Avenue SW., Washington, DC.

FOR FURTHER INFORMATION CONTACT: Dr. Matthew H. Royer, Chief Operations Officer, Biological Assessment and Taxonomic Support, Operational Support, Plant Protection and Quarantine, APHIS, USDA, P.O. Drawer 810, Riverdale, MD 20738. The telephone number for the agency contact will change when agency offices in Hyattsville, MD, move to Riverdale, MD, during February. Telephone: (301) 436–8896 (Hyattsville); (301) 734–8896 (Riverdale).

SUPPLEMENTARY INFORMATION:

Public Hearings

Public hearings are scheduled to be held in Kansas City, MO, on March 6, 1995; in Sacramento, CA, on March 7, 1995; and in Washington, DC, on March 10, 1995.

A representative of the Animal and Plant Health Inspection Service (APHIS), U.S. Department of Agriculture (USDA), will preside at each public hearing. Any interested person may appear and may be heard in person, by attorney, or by other representative. Written statements may be submitted and will be made part of the meeting record. Persons who wish to speak at a public hearing will be asked to provide their name and organization. We ask that anyone who reads a statement provide two copies to the presiding officer at the hearing.

Each public hearing will begin at 10 a.m. and is scheduled to end at 5 p.m., local time. However, the hearing may be terminated at any time after it begins if all persons desiring to speak have been heard. If the number of speakers at the hearing warrants it, the presiding officer may limit the time for each presentation so that everyone wishing to speak has the opportunity.

The purpose of the hearings is to give interested persons an opportunity for the oral presentation of data, views, and arguments. Questions about the content of the proposed rule may be part of the commenters' oral presentations. However, neither the presiding officer nor any other representative of APHIS will respond to the comments at the hearing, except to clarify or explain provisions of the proposed rule.

Background

The Secretary of Agriculture has authority under the Federal Plant Pest Act, as amended (7 U.S.C. 150aa through 150jj) and the Plant Quarantine Act, as amended (7 U.S.C. 151 through 164a, 167) to regulate the movement of articles to prevent the introduction and dissemination into and within the United States of plant diseases, injurious insects, and other plant pests, hereinafter referred to as plant pests. APHIS has been delegated the authority to administer these and other related statutes and has promulgated regulations implementing these statutes in 7 CFR chapter III.

Many of the regulations in 7 CFR chapter III are designed to protect against the inadvertent dissemination of plant pests that may be associated with certain plants, plant parts, or other articles. For example, the foreign quarantine notices in 7 CFR part 319 contain regulations that restrict the importation and entry of, among other things, foreign cotton, sugarcane, fruits and vegetables, and coffee in order to prevent the entry of plant pests.

The regulations in 7 CFR chapter III also provide for the issuance of permits for the movement of plant pests into (importation) or through (transit shipment) the United States, or interstate. A person may apply to APHIS for a permit using the application process set forth in the plant pest regulations in 7 CFR 330.200. Under those regulations, APHIS will review an application and make a determination as to whether the movement of the plant pest can be accomplished in a manner that will prevent its dissemination. If adequate safeguards can be put into place to prevent the dissemination of the plant pest, APHIS may issue a permit for the movement into or through the United States, or interstate, of the plant pest.

The scope of the plant pest regulations in 7 CFR 330.200 is limited to the movement of known plant pests; the movement of nonindigenous organisms not known to present a plant pest risk, as well as the release of such organisms into the environment, are not addressed. A report on nonindigenous species prepared by the U.S. Congress' Office of Technology Assessment (OTA), ''Harmful Non-Indigenous Species in the United States,'' (OTA–F–565, Washington, DC; U.S. Government Printing Office, September 1993) (referred to below as the OTA report) recommends that APHIS more closely examine any proposed introduction (importation, interstate movement, or release into the environment) into the United States of a nonindigenous organism. The OTA report cited losses in the billions of dollars that can be attributed to the negative effects of

certain nonindigenous organisms. As U.S. agriculture's ''first line of defense,'' we believe that APHIS must supplement its current regulations to prevent or minimize the potential problems presented by the introduction of nonindigenous organisms whose plant pest status is unknown. Therefore, we are proposing to establish comprehensive regulations governing the introduction of those nonindigenous organisms that we have reason to believe may be plant pests or may result in the introduction or dissemination of plant pests.

In our proposed regulations, a nonindigenous organism is defined as any organism proposed for introduction into any area of the United States beyond its established range. Therefore, an organism does not have to be from another country to be considered nonindigenous; an organism that has an established range only in one part of the United States would be considered nonindigenous in another part of the United States.

The proposed regulations would not eliminate the plant pest regulations in 7 CFR 330.200. Those regulations would remain in place to govern the importation and interstate movement of known plant pests, both indigenous and nonindigenous. The proposed regulations would allow APHIS to examine certain nonindigenous organisms proposed for introduction to determine whether those nonindigenous organisms are plant pests or constitute a risk of the introduction or dissemination of plant pests. The proposed regulations would impose conditions on the introduction of those nonindigenous organisms in order to prevent plant pest dissemination. Under the proposed regulations, persons wishing to import or move interstate a regulated nonindigenous organism would first have to apply for a permit from APHIS. The proposed regulations would also contain specific provisions regarding permits for the release of certain nonindigenous organisms, such as pollinators or biological control agents, into the environment.

It is the USDA's position that the provisions of the proposed rule that would require a permit for the release of a nonindigenous organism into the environment are consistent with the Federal Plant Pest Act and the Plant Quarantine Act and are a reasonable construction of the Secretary of Agriculture's statutory authority under those acts. The Federal Plant Pest Act and the Plant Quarantine Act authorize the Secretary of Agriculture to take certain actions to prevent the introduction into and dissemination within the United States of plant pests.

Scope

Our authority to regulate nonindigenous organisms is based on there being reason to believe that such organisms may be plant pests or may result in the introduction or dissemination of plant pests. Therefore, any nonindigenous organisms that we propose to regulate would necessarily have to fall within one of the categories of organisms included in the definition of a plant pest or would have to present a risk of introducing or disseminating a plant pest. The Federal Plant Pest Act defines a *plant pest* as ''any living stage of: Any insects, mites, nematodes, slugs, snails, protozoa, or other invertebrate animals, bacteria, fungi, other parasitic plants or reproductive parts thereof, viruses, or any organisms similar to or allied with any of the foregoing, or any infectious substances, which can directly or indirectly injure or cause disease or damage in any plants or parts thereof, or any processed, manufactured, or other products of plants.''

Within the categories of organisms addressed above, there are several nonindigenous organisms that are already regulated by APHIS elsewhere in its regulations and would not, therefore, be included in the scope of the proposed regulations. Those organisms are addressed below in the discussion of proposed § 335.2.

Proposed Regulations

The proposed regulations contain nine sections:

§ 335.1 Definitions.
§ 335.2 Regulated organisms.
§ 335.3 General restrictions on the introduction of regulated organisms.
§ 335.4 Permits for the introduction of regulated organisms.
§ 335.5 Nonindigenous organisms exempted from regulation under this part.
§ 335.6 Conditions for the introduction of regulated organisms.
§ 335.7 Facilities for the containment of regulated organisms.
§ 335.8 Container requirements for the movement of regulated organisms.
§ 335.9 Costs and charges.

Each of these sections is discussed in detail below.

Definitions (§ 335.1)

In proposed § 335.1, we define terms used in the regulations. Several of these terms—*Administrator, Animal and Plant Health Inspection Service (APHIS), APHIS inspector, import, interstate, introduce (introduction), move (moving, movement), permit, person, port of first arrival, State,* and *United States*—are terms used by APHIS elsewhere in its regulations in 7 CFR chapter III and 9 CFR chapter I. The remaining terms, as they apply to our proposed regulations, are explained below.

We would define *nonindigenous organism* as ''any organism proposed for introduction into any area of the United States beyond its established range.'' This definition would place the primary focus on whether the area into which an organism would be introduced is within or outside of the organism's *established range* (which we would define as ''the area in which a species maintains a self-sustaining, free-living population'').

To identify the organisms covered by the proposed regulations, the term *regulated organism* would be defined as ''any living stage of any nonindigenous organism belonging to the taxa listed in § 335.2(a) that is not listed in § 335.2(b) or exempt in accordance with § 335.5.'' The list in § 335.2(a) is set forth later in this proposed rule.

We would define *environment* as ''all land, air, and water; and all living organisms in association with land, air, and water.'' As part of our review of permit applications, we must consider a regulated organism's effects on the environment within its established range and its potential to affect the environment in the area into which its introduction is proposed. The proposed definition, therefore, takes into account those elements of what is commonly considered to be ''the environment'' that could be affected by the introduction of a regulated organism.

Established would be defined as ''the condition of a species that has formed a self-sustaining, free-living population at a given location.'' We are proposing to require that a person seeking a permit furnish, as part of a permit application, information pertaining to a regulated organism in its established range. This definition would help to clarify the information to be included in an application.

Plant would be defined as ''any stage of any member of the plant kingdom including, but not limited to, trees, plant tissue cultures, plantlet cultures, pollen, shrubs, vines, cuttings, grafts, scions, buds, roots, seeds, cells, tubers, and stems.'' *Plant product* would be defined as ''any processed or manufactured plant or plant part.'' These definitions are based on our statutory authority under the Federal Plant Pest Act, as amended, and the Plant Quarantine Act, as amended.

We would use the definition provided for *plant pest* in the Federal Plant Pest

Act: ''Any living stage of any insects, mites, nematodes, slugs, snails, protozoa, or other invertebrate animals, bacteria, fungi, other parasitic plants or reproductive parts of parasitic plants, viruses, or any organisms similar to or allied with any of the organisms previously identified in this definition, or any infectious substances, which can directly or indirectly injure or cause disease or damage in any plants or plant parts, or any processed, manufactured, or other products of plants.''

We would define *release into the environment* as ''the use of a regulated organism outside the constraints of physical confinement.'' Given the nature of many regulated organisms, we believe that it is necessary to treat any use of a regulated organism outside of the constraints of physical confinement, such as those found in a laboratory or greenhouse, as a release into the environment.

Regulated Organisms (§ 335.2)

Paragraph (a)(1) of proposed § 335.2 contains a list of taxonomic groups that include known plant pest species. We have reason to believe that other species within those taxonomic groups may also be plant pests; therefore, we believe that nonindigenous organisms within those taxonomic groups should be evaluated prior to their introduction into the United States. The list was drawn from a similar list contained in 7 CFR part 340 and was developed based on APHIS' experience with issuing plant pest permits. (The list in proposed § 335.2(a)(1) differs from the list in 7 CFR part 340 in two respects. First, parasitic weeds of the species *Alectra* are included on the list in 7 CFR part 340 but have been omitted from the list in proposed § 335.2(a)(1) because *Alectra* spp. are listed noxious weeds in 7 CFR 360.200. The second respect in which the two lists differ is that the list in proposed § 335.2(a)(1) contains additional taxonomic groups under the class Insecta. These additional groups, which are listed below, were included on the list in proposed § 335.5(a)(1) based on APHIS' experience with issuing plant pest permits:

Family Aphelinidae
Family Braconidae
  Genus Perilitus
Family Diapriidae
  Genus Ismarus
Family Encyrtidae
Family Eulophidae
Family Ichneumonidae
  Subfamily Cryptinae
  Subfamily Diplazontinae
  Subfamily Gelinae
  Subfamily Mesochorinae
  Subfamily Ephialtinae
Family Pteromalidae
Family Scelionidae
  Genus Gryon
  Genus Scelio
Family Signiphoridae
Family Trichogrammatidae

If the list in proposed § 335.2(a)(1) is adopted and a person believes that an organism should be added to the list, that person could petition APHIS for a change in the regulations under the Administrative Procedure Act (5 U.S.C. 553(e)) and the USDA's regulations in 7 CFR part 1.

The taxonomic scheme used in proposed § 335.2(a)(1) is a five-kingdom system, found in S.P. Parker's ''Synopsis and Classification of Living Organisms'' (McGraw Hill, 1984). Within each taxon, all nonindigenous species are regulated organisms, unless there are taxa of lower rank specifically listed, in which case only those specifically listed, lower-ranked taxa are regulated organisms. Other classified organisms not listed are not regulated organisms.

We believe that organisms that are currently unclassified or whose classification is unknown should be evaluated prior to their introduction into the United States because of the possibility that the organisms contain plant pests or are themselves plant pests; therefore, such organisms would also be regulated organisms under § 335.2(a)(2).

As mentioned above, the proposed regulations would not supplant our existing plant pest regulations in 7 CFR 330.200. Additionally, there are other organisms covered elsewhere in existing regulations that would also remain regulated under the existing regulations. To make that clear, paragraph (b) of proposed § 335.2 would specify that the following categories of organisms would continue to be regulated under their existing regulations: Live bees other than honeybees of the genus *Apis* regulated under 7 CFR 319.76; plant pests regulated under 7 CFR 330.200; live honeybees of the genus *Apis* regulated under 7 CFR part 322; organisms genetically engineered through recombinant DNA techniques regulated under 7 CFR part 340; noxious weeds regulated under 7 CFR part 360; organisms and vectors that may introduce or disseminate contagious animal diseases regulated under 9 CFR part 122; and etiologic microorganisms that cause disease in humans (including bacteria, bacterial toxins, viruses, fungi, rickettsia, protozoans, arthropods, parasites, and the hosts and vectors that may carry these etiological microorganisms) that are regulated by the Centers for Disease Control and Prevention under 42 CFR part 71, unless the microorganism, host, or vector could also be a plant pest.

General Restrictions on the Introduction of Regulated Organisms (§ 335.3)

This section of the proposed regulations prohibits the introduction of any regulated organism unless the regulated organism is introduced in accordance with the proposed regulations. This means that a regulated organism may not be imported, moved interstate, or released into the environment unless APHIS has given its authorization to do so. Under the proposed regulations, that authorization would entail the issuance of a permit for the introduction in accordance with proposed § 335.4. The permit application process is discussed in detail below.

Section 335.3 of the proposed regulations also provides that any introduction of a regulated organism that is not in compliance with the provisions of the proposed regulations makes that regulated organism subject to destruction, disposal, or the remedial measures that the Administrator determines to be necessary to prevent a plant pest from being introduced into, or disseminated within, the United States.

We believe that these restrictions on the introduction of regulated organisms are necessary to prevent the introduction and dissemination within the United States of plant pests.

Permits for the Introduction of Regulated Organisms (§ 335.4)

Section 335.4 of the proposed regulations sets forth the proposed process by which a person may obtain a permit from APHIS for the introduction of a regulated organism. The section also sets forth the procedure that would be followed by APHIS in response to the receipt of a permit application and the appeal procedure that would be available in the event of APHIS' denial of a permit application or revocation of a permit.

Proposed paragraph (a) provides that an application for a permit must be submitted to the Administrator in care of Biological Assessment and Taxonomic Support (BATS), which is the staff within APHIS that would be responsible for the processing of permit applications submitted under the proposed regulations. The application would have to state the type of permit being requested by the applicant (import, interstate movement, or release into the environment). Although the mailing address of BATS is provided in

proposed paragraph (a), the proposed regulations would not necessarily require that an application be submitted through the mail. By not specifically requiring that an application be made in written form through the mail, we are intentionally leaving open the possibility that a person could submit an application using other means, such as via facsimile machine or in an electronic medium compatible with APHIS equipment.

Proposed paragraph (a)(1) provides that a person may apply for a permit for the importation or interstate movement of regulated organisms within a taxon of a higher level than species (genus, family, order, class, phylum). Because research is not always confined to a single organism, or even to an identified group of organisms, the issuance of such a permit would give researchers the ability to import or move interstate a wide range of regulated organisms without having to submit a permit application for each species or strain of regulated organism. We believe that we could assure the prevention of plant pest dissemination during the importation or interstate movement of even a wide range of regulated organisms by assigning specific conditions that would apply to the importation or interstate movement of all regulated organisms covered by the permit. The conditions that would be assigned to the permit would be designed to ensure that there is an appropriate level of biosecurity, which would be determined by the biological characteristics of the entire taxon. Because the range of organisms that might be included in a permit could be quite broad, the assigned safeguards may be more stringent than those that might be assigned to a single organism within the same taxon.

Proposed paragraph (a)(2) contains provisions for the identification of trade secret or confidential business information (CBI). As set forth in the USDA's regulations regarding the handling of information from private businesses (see 7 CFR 1.11), the USDA is responsible for making the final determination with regard to the disclosure of information designated CBI, but the policy of the USDA is to obtain and consider the views of the submitter and to provide the submitter the opportunity to object to the disclosure of CBI.

Under proposed paragraph (a)(2), if an application contained any information deemed to be CBI, we would require that two copies of the application be prepared. Each page of one copy would have to be marked ''CBI Copy'' and have all CBI designated as such. The second copy would be required to have all designated CBI deleted and would be marked ''CBI Deleted'' on each page of the copy.

Proposed paragraph (a)(3) provides that an application for a permit for the importation or interstate movement of a regulated organism must be received by the Administrator at least 30 days prior to the date of the proposed importation or interstate movement and that an application for the release into the environment of a regulated organism must be received by the Administrator at least 120 days prior to the date of the proposed release. The 30- and 120-day time periods referred to in proposed paragraph (a)(3) are necessary to ensure that APHIS has adequate time to review applications for permits.

Proposed paragraph (a)(4) provides that, after receiving an application, APHIS would conduct a review to determine whether the application contains all of the information required by proposed § 335.4. This review would be completed within 15 days of our receipt of an application for importation or interstate movement, and within 30 days of receiving an application for release into the environment. Upon completion of the review to determine whether the application contains all of the information required by proposed § 335.4, we would inform the applicant of the date that the application was received, which would be the date that the review period had commenced, or, if the application is incomplete, what additional information is needed. Once an application is complete, APHIS would commence its review of the application. A copy of the application marked ''CBI Deleted'' or ''No CBI'' would be forwarded to the State department of agriculture in the State where the introduction is planned so that the State would have an opportunity to review the application and convey any comments to APHIS.

In addition to that State review, which, unless waived by an individual State, would be conducted on all applications for the importation, interstate movement, or release into the environment of a regulated organism, there are several Federal agencies other than APHIS that have authority over the release into the environment of certain regulated organisms. (Within the USDA, there are the Agricultural Marketing Service, the Agricultural Research Service, the Cooperative State Research Service, the Forest Service, and the Extension Service; outside the USDA are the Fish and Wildlife Service, the National Oceanic and Atmospheric Administration, the Department of Defense, the Environmental Protection Agency, the Centers for Disease Control and Prevention, the Customs Service, the U.S. Coast Guard, the U.S. Army Corps of Engineers, and the Drug Enforcement Agency.) These agencies may be consulted as part of our 30-day review to determine whether the application contains all of the information required by proposed § 335.4. There also may be instances when consultation with another Federal agency would be required. For example, APHIS would have to consult with the Fish and Wildlife Service if APHIS determined that a regulated organism proposed for release into the environment may have an effect on a threatened or endangered species. Because another agency would be involved, APHIS would no longer have full control over the review of an application and could not, therefore, be certain that the review would be completed in the specified 120-day review period. In such cases, the applicant would be notified, in writing, of the need for consultation and informed that the review period may extend beyond the specified 120 days.

When an application contains all the information required by proposed § 335.4 and outside consultation is not required, we believe that the applicable 30- or 120-day review period is sufficient for APHIS to thoroughly examine all aspects of a particular proposed introduction of a regulated organism. Based on our past experience in processing applications, we anticipate that, in many cases, action on a permit application would be completed in less time. When sufficient applicable data are available from previously issued permits, APHIS may be able to complete its review of a permit application in appreciably less time than the applicable 30- or 120-day review period.

Paragraphs (b) through (e) of proposed § 335.4 contain the data requirements that would have to be met for an application to be deemed complete. Paragraph (b) contains data elements that would apply to all permit applications; paragraphs (c), (d), and (e) contain specific additional data elements that would be required for applications for importation, interstate movement, and release into the environment, respectively.

Except for those elements that are administrative in nature, the proposed data elements would be a means by which we could assess the plant pest and environmental risks involved in a proposed introduction. A regulated organism of concern would fall into one of the following categories: (1) An organism of foreign origin that is not

present in the United States; (2) an organism of foreign origin that is present in the United States but is capable of further expansion beyond its present established range; and (3) an organism of foreign origin that has reached its full range of potential establishment in the United States but is sufficiently biologically different from the organism that is present in the United States to warrant concern. In each of these three categories, the regulated organism may be also of concern if it can vector a foreign plant pest that also falls into one of the three categories. The criteria we may use to further determine whether a regulated organism in one of the above categories warrants concern may be whether the organism causes an increase in the population of a plant pest or whether the organism causes injury or disease to plants.

We believe the information that would be required in a permit application is necessary for APHIS to be able to gain a clear understanding of the potential plant pest risk and environmental effects of the introduction for which a person is seeking a permit. The specific data requirements are discussed in detail below.

The first item that would be required under proposed paragraph (b) for all permit applications would be the name, address, telephone number, and facsimile number of the person seeking a permit. This information is necessary because the permit will be issued to that person, and we will likely need to contact that person during the application review process.

We would then require several items that would serve to identify the regulated organism and describe its biology. To that end, we would require:

1. *The scientific name, common name, and any other information that serves to identify the regulated organism as specifically as possible (including the subspecies, race, and strain of the regulated organism) and a description of the methods used to establish the identity of the regulated organism.* The accurate identification of a regulated organism is a necessary first step in APHIS' review of an application, and knowing what methods were used, including consultation with experts, to identify the regulated organism would enable APHIS to evaluate the accuracy of the identification. If new techniques or information become available that allow the regulated organism to be more accurately identified, APHIS may need this information from the applicant in order to fairly review the application and assess the plant pest and environmental risks associated with the proposed introduction of the regulated organism. This type of information would also help APHIS to verify whether the application is complete by comparing information provided in the application to that available in the literature and other sources.

2. *A description of the measures that have been taken to establish that the regulated organism and any material associated with the introduction of the regulated organism do not contain any organisms not identified in the permit application.* This information would be used by APHIS to address the issue of purity as it applies not only to the regulated organism itself, which may have hyperparasites or other organisms, for example, but also as it applies to any material, such as packaging or host material, associated with the introduction of the regulated organism. By knowing what organisms will be associated with the regulated organism, APHIS can more comprehensively determine the plant pest risk associated with the regulated organisms and assign appropriate conditions on the permit.

3. *The intended use of the regulated organism.* This information would apprise APHIS of the materials, methods, or procedures to be used in the intended experimental, commercial, or other uses of the regulated organism. That knowledge would be used by APHIS to assess plant pest risk, determine conditions necessary to mitigate the risk, and come to a decision regarding the issuance or denial of a permit. Additionally, pursuant to the provisions of the National Environmental Policy Act of 1969 (42 U.S.C. 4321 *et seq.*) (NEPA), we will consider, during our analysis, the potential beneficial or harmful effects that a regulated organism could have on the environment, such as the effects that a regulated organism used as a biological control agent could have on its target and nontargets.

4. *A description of the life cycle, biology, and ecology of the regulated organism.* Understanding a regulated organism's potential for survival, establishment, and dispersal would enable APHIS to determine the plant pest risk associated with the regulated organism. A description of the biological characteristics of the organism would be of use to APHIS during its review of the permit application, especially if relatively little is known about the organism.

5. *Whether the regulated organism has been genetically modified (if so, include a description of the genetic modification).* If the regulated organism has been genetically modified through sexual recombination and selection for traits not typical of the organism in nature, through induced mutation and selection for special traits, or through other classical techniques, APHIS would need a description of the modification in order to assess the biology of the modified regulated organism insofar as it differs from that of an unmodified organism of the same species. If, on the other hand, recombinant DNA techniques had been used to effect a modification, BATS would refer the applicant to the Biotechnology Permits staff of Biotechnology, Biologics, and Environmental Protection, which handles permits for genetically engineered organisms.

6. *The country and locality where the regulated organism was originally collected from nature, and the countries and localities where the regulated organism has been propagated and maintained since its collection.* When assessing plant pest risk, APHIS would consider the conditions in the country or countries in which a regulated organism was collected, propagated, and maintained. This information would be used by APHIS to determine whether sufficient safeguards are in place to prevent contamination of the regulated organism by other organisms. In addition, an organism may genetically vary from area to area, so this information may have bearing on APHIS' determination of plant pest risk.

7. *The established range of the regulated organism in the United States.* If the regulated organism is already established in one or more areas of the United States, this information would be used to determine the plant pest and environmental risks to areas of the United States in which the organism does not already occur, and to identify circumstances under which consultation with specific States and other parties may be necessary before assigning conditions for the movement or release of a regulated organism that is established within the United States.

We would also require information relating to details of the proposed introduction:

8. *The number of specimens or units of the regulated organism to be introduced.* The scale of the introduction would be one factor considered when assessing the possible plant pest risk associated with a regulated organism. APHIS would consider whether the destination facility listed on the application is equipped to handle any large quantities of a regulated organism. The safeguards assigned as conditions of a permit would have to be adequate to mitigate that risk.

9. *A description of any host material, substrate, medium, or organism that will accompany the regulated organism.* There may be times when the material accompanying a regulated organism is itself regulated or restricted, such as a nonindigenous rust fungus on plants of the genus *Berberis.* (The interstate movement of certain *Berberis* species is restricted under 7 CFR 301.38.) An accurate description of the material accompanying a regulated organism would enable APHIS to ascertain the purity of the regulated organism and to decide whether the requirements of other regulations needed to be met before a permit could be issued.

The final three data requirements of paragraph (b) direct the person applying for a permit to answer the additional questions in paragraph (c) if applying for a permit to import a regulated organism, paragraph (d) if applying for a permit to move a regulated organism interstate, and paragraph (e) if applying for a permit to release a regulated organism into the environment.

A person applying for a permit to import a regulated organism would have to provide the following seven data elements in proposed paragraph (c) in addition to the data elements required by paragraph (b):

10. *The country and locality from which the regulated organism will be exported to the United States.* When assessing plant pest risk, APHIS would consider the conditions in the country and locality in which a regulated organism was maintained. This information would be used by APHIS to determine whether sufficient safeguards are in place to prevent contamination of the regulated organism by other organisms.

11. *The address, telephone number, and facsimile number of the person in the exporting country from whom the regulated organism will be received.* This information would be used by APHIS to assess whether sufficient safeguards are in place in the exporting country to prevent contamination of the regulated organism by other organisms. APHIS would need to know whether a regulated organism is coming from, for example, some type of commercial or scientific establishment or directly from nature in order to accurately assess all factors affecting the purity of an organism.

12. *The port of first arrival in the United States through which the regulated organism is intended to be imported.* Section 335.6 of the proposed regulations would require that all regulated organisms imported into the United States be imported through a port of first arrival that has a plant inspection station. The answer to this question would allow APHIS to ensure that the person importing a regulated organism planned to use a plant inspection station and would give APHIS the opportunity to give advance notice to personnel at the port of first arrival as a means of facilitating handling of the regulated organism.

13. *The address (including the county), telephone number, and facsimile number of the facility to which the regulated organism will be delivered.* Under § 335.6 of the proposed regulations, all regulated organisms imported into the United States could be moved only to the destination listed on its permit. APHIS would need to know the destination of the organism so that the facility could be inspected to verify whether the conditions at the facility meet the requirements of proposed § 335.7.

14. *A detailed description of the procedures, processes, and safeguards that will be used in the destination facility to prevent the escape and dissemination of the regulated organism and any material accompanying the regulated organism.* This information is necessary for APHIS to assess whether the conditions at the facility in which the regulated organism would be held meet the requirements of proposed § 335.7.

15. *The means by which the regulated organism will be imported into the United States (air mail, air freight, baggage, or motor vehicle).* This information would be provided to an APHIS inspector at the port of first arrival to facilitate the entry of a regulated organism.

16. *The planned date(s) of the importation of the regulated organism.* The planned dates of importation would be needed so APHIS could verify that a regulated organism was received at its destination. Also, there may be circumstances when APHIS would recommend or assign dates of importation to help minimize the risk of spread in the event of an escape of the regulated organism.

A person applying for a permit to move a regulated organism interstate would have to provide the six data elements in paragraph (d) in addition to the data elements required by paragraph (b). These six data elements are:

17. *The State and locality from which the regulated organism will be moved interstate.* When addressing plant pest risk, APHIS would consider the conditions in the State and locality in which a regulated organism was located. This information would be used by APHIS to determine the plant pest risk posed by the regulated organism.

18. *The address, telephone number, and facsimile number of the person in the originating State from whom the regulated organism will be received.* For interstate movement, the proposed regulations in § 335.6 would require that a regulated organism be moved interstate only to the destination listed on the permit. Knowledge of the location from which the regulated organism is to be moved would help APHIS to determine whether conditions at the facility in which the regulated organism would be held after interstate movement meet the requirements of proposed § 335.7.

The remaining four data requirements for paragraph (d) are the same as the final four data requirements in paragraph (c), and would serve the same purpose in APHIS' review of the application.

A person applying for a permit to release a regulated organism into the environment would have to address the data elements in proposed paragraph (e) in addition to the data elements already required by proposed paragraph (b). The effects of releasing a regulated organism into the environment generally have the potential to be much more far-reaching than those associated with importation and interstate movement. When considering an application for an environmental release, APHIS must consider the plant pest risk associated with the release and the effects the release could have on the environment as a whole. This means that the provisions of statutes such as the Endangered Species Act and NEPA would have to be considered.

As discussed previously, there are several agencies other than APHIS that may have an interest in the release into the environment of regulated organisms and that may be consulted as part of our 30-day review to determine whether the application for a permit to release a regulated organism into the environment contains all the data required by proposed § 335.4. The additional requirements of paragraph (e) would, therefore, be used to help determine what statutes might apply to the proposed release into the environment and what agencies APHIS might have to contact during its review of the application. We envision that State regulatory officials will play a significant role in providing environmental and ecological data regarding the location where the regulated organism is to be released, and otherwise assist in the enforcement of the Federal regulations on a cooperative basis.

The additional data requirements for applications to release a regulated organism into the environment are:

19. *The purpose of the release into the environment of the regulated organism.* This information would be used by APHIS during its preparation of an environmental assessment.

20. *The anticipated date(s) of the release into the environment of the regulated organism.* This information would be used to determine the possible effects on nontarget species that may be particularly susceptible or exposed to the regulated organism at the time of its release into the environment.

21. *A description, including methods of release and release site(s), of the intended release into the environment of the regulated organism.* The method of release may impact the risk presented by the regulated organism to the environment or plants, and APHIS may specify conditions on a permit to mitigate that risk. The locations of planned release sites would be needed to facilitate the evaluation of future applications for releases of regulated organisms into the environment at the same sites in the future.

22. *A description of all testing and review that has been conducted to assess the effects of the regulated organism on the environment.* This data element would be used to help APHIS evaluate whether sufficient testing and review to determine the potential environmental effects of a regulated organism had been conducted prior to issuing a permit for release into the environment. If the regulated organism is to be used as a biological control agent, any testing and review that has been conducted to assess the effects of the biological control agent on nontarget organisms must be described.

23. *The effect of the regulated organism on the environment in its established range.* This information would be used to help APHIS evaluate the anticipated effects, including potential effects on threatened and endangered species, of releasing the regulated organism into the environment. These effects may include destruction or lessening of the aesthetic, recreational, or commercial value of the environment, including threatened and endangered species. If APHIS determined that there would be negative effects on the environment or on threatened or endangered species, APHIS would report that information to the proper Federal authorities.

24. *The host specificity of the regulated organism under both artificial and natural conditions.* This information would help focus APHIS' investigation of the nontarget effects of the regulated organism. Of particular interest to APHIS would be the regulated organism's potential effects on any biological control agents that already might be in use in the area of the proposed release. This data element, as well as those data elements dealing with the regulated organism's effects on nontargets and the environment, would help APHIS address that concern.

25. *References to any published and unpublished documents that support the information required by paragraphs (e)(4), (e)(5), and (e)(6) of this section. If available to the applicant, copies of any unpublished referenced documents must be attached to the application.* If the application contains information that is supported by available literature, it would be useful for APHIS to review that literature to assess plant pest risk and potential environmental effects. APHIS could reasonably expect to have access to any published material cited in the application, but the unpublished documents available to the applicant must be attached to the application.

Facility and Release Site Inspection

Paragraph (f) of proposed § 335.4 would provide that the Administrator may inspect the facility into which a regulated organism proposed for importation or interstate movement would be moved to determine whether the procedures, processes, and safeguards at the facility meet the requirements of proposed § 335.7. Similarly, the Administrator would be allowed to inspect the site where a regulated organism would be released into the environment so that a determination could be made as to the effects on the environment of the proposed release of the regulated organism.

Administrative Action on Applications

Paragraph (g) of proposed § 335.4 would provide that a permit would be either issued or denied upon completion of APHIS' review of the application.

If a permit is issued, it would be numbered and would specify the conditions that would apply to the introduction of the regulated organism. There may be considerations based on the particular characteristics of a regulated organism that APHIS would take into account when determining the length of time for which a permit would be valid. Thus, to allow both APHIS and the permittee the greatest degree of flexibility, all permits would not be valid for the same predetermined length of time; rather, the length of a permit's validity would be based on the circumstances of that particular introduction. Therefore, we are proposing that a permit could be valid for as long as 10 years following the date of issuance, unless the permit was revoked in accordance with proposed § 335.4(h). The expiration date would be specified on the permit.

Proposed paragraph (g)(2) states that if a permit is denied, the applicant would be promptly informed, in writing, of the reasons the permit was denied and given the opportunity to appeal the denial in accordance with proposed § 335.4(h).

A permit application would be denied to an applicant from whom a permit had been revoked within the past 12 months due to the failure of the applicant or the applicant's agents or employees to comply with the proposed regulations or any condition specified on the permit, unless the permit has been reinstated upon appeal. We believe that this provision is necessary to ensure that applicants who have had a permit revoked for cause are not able to immediately reapply for a new permit. We believe this would discourage violations of the regulations and would help advance the effectiveness of the permit system as a means of excluding plant pests from the United States.

Proposed paragraph (g) would further provide that a permit would be denied if an APHIS inspector is not allowed to inspect the facility into which a regulated organism proposed for importation or interstate movement would be moved or the site where a regulated organism is proposed to be released into the environment. In order to prevent or mitigate the potential plant pest risks that may be associated with an introduction, we believe that it is essential that APHIS have the opportunity to assess the conditions under which a regulated organism would be held after movement or released into the environment.

A permit would also be denied if the Administrator determines, based on a review of the available information, that the introduction of the regulated organism would present a significant risk of plant pest dissemination and that no adequate safeguards could be arranged to mitigate the risk presented by the proposed introduction.

Denial or Revocation of Permit; Appeals

Proposed paragraph (h) would provide that APHIS may revoke a permit that has already been issued if the conditions of the permit or any part of the proposed regulations were violated by the person to whom the permit was issued, or his or her agents or employees. We believe that the proposed regulations are necessary to

ensure that the introduction of regulated organisms would be conducted under conditions that prevent the introduction and dissemination of plant pests; that desired level of safety could not be reached if a regulated organism was introduced contrary to the conditions of the permit or the proposed regulations. If a person believed that a permit was wrongfully revoked or a permit application was wrongfully denied, that person could appeal to the Administrator, in writing. The appeal process is set forth in paragraph (h) of proposed § 335.4.

Paragraph (i) of proposed § 335.4 would require the person to whom a permit for the introduction of a regulated organism has been issued to maintain records for 10 years that identify the regulated organism as specifically as it can be determined, identify the characteristics of the regulated organism, and state the disposition of the regulated organism. Proposed paragraph (i) provides that an APHIS inspector shall be allowed access to records required to be maintained under the proposed paragraph for inspection and copying during normal business hours. The proposed requirement that the records be kept for 10 years following the issuance of a permit is based on APHIS' belief that most projects involving the introduction of a regulated organism would have been completed by that time, or that substantial information regarding the biology and potential effects on the environment of the regulated organism would have been obtained within 10 years. This information would provide APHIS with data regarding the nature of the organism that may have a bearing on APHIS' review of subsequent applications to introduce the same or similar organisms.

Nonindigenous Organisms Exempted From Regulation Under This Part (§ 335.5)

The taxa listed in § 335.2(a) include species that are known plant pests, which gives us reason to believe that other species within those taxa may be plant pests. However, some taxa may also include species that present no significant plant pest risk and could safely be introduced into the United States without restriction. Therefore, § 335.5 of the proposed regulations provides a process by which a person could request that a taxon of nonindigenous organism be exempted from regulation under proposed part 335.

Under proposed § 335.5(a), exemptions could be obtained for the introduction of a regulated organism into the entire United States, the continental United States (the conterminous 48 States and Alaska), Hawaii, Puerto Rico, the Northern Mariana Islands, or an individual U.S. territory or possession, or a combination thereof.

Paragraph (b) of proposed § 335.5 sets forth the information that would have to be submitted to the Administrator with a person's request to have a regulated organism exempted from regulation:

(1) The name, address, telephone number, and facsimile number of the person submitting the request;

(2) The scientific name, common name, and any other information that serves to identify the regulated organism as specifically as possible (including the subspecies, race, and strain of the regulated organism) that the person believes should be exempted from regulation under this part and a description of the methods used to establish the identity of the regulated organism;

(3) A description of the life cycle, biology, and ecology of the regulated organism;

(4) Whether the regulated organism has been genetically modified (if so, include a description of the genetic modification);

(5) The established range of the regulated organism in the United States;

(6) Whether the regulated organism has been released into the environment in the area or areas of the United States for which the exemption is being requested and, if so, the location and date of the release;

(7) A description of all testing and review that has been conducted to assess the effects of the regulated organism on the environment;

(8) The effect of the regulated organism on the environment in its established range;

(9) The host specificity of the regulated organism under both artificial and natural conditions;

(10) References to any published and unpublished documents that support the information required by paragraphs (b)(1)(ii) through (b)(1)(ix) of this section. If available to the applicant, copies of any unpublished referenced documents must be attached to the application; and

(11) A list of at least three universities, museums, scientific societies, or other organizations that maintain collections of organisms to which specimens of the regulated organism have been submitted, and the identification numbers assigned to the specimens.

Ten of these 11 data elements are similar to those found in paragraphs (b) and (e) of proposed § 335.4, which contain the data elements that must be addressed in an application for a permit to release a regulated organism into the environment. The eleventh proposed element (a list of at least three universities, museums, scientific societies, or other organizations that maintain collections of organisms to which specimens of the regulated organism have been submitted, and the identification numbers assigned to the specimens) would provide a reference for APHIS and is also proposed as a permit condition for the release of a regulated organism into the environment in proposed § 335.6(c). These 11 data elements are intended to provide APHIS with information necessary to assess the environmental and plant pest risks associated with exempting a nonindigenous organism from regulation under proposed part 335.

Proposed § 335.5(b)(2) provides that after receiving a request for exemption, APHIS would conduct a review to determine whether the request for an exemption contained all the information required by proposed § 335.5(b)(1). This review would be completed within 30 days of APHIS' receipt of the request for an exemption. Upon completion of that review, we would inform the person requesting the exemption of the date the request was received, which would be the date that the review period had commenced (or, if the request was incomplete, what additional information was needed). Once the request for exemption is complete, APHIS would commence its review of the request. When the request contains all the information required by proposed § 335.5(b)(1), we believe that a 120-day review period—which is proposed in § 335.5(b)(2)—would be sufficient for APHIS to thoroughly examine all aspects of the request for an exemption.

If, based upon its review of the request, APHIS finds that exempting the regulated organism from regulation would not present a significant plant pest risk, APHIS would publish a notice of proposed rulemaking in the **Federal Register**, proposing to add the organism to the list of regulated organisms exempted from the regulations in proposed part 335. If the public comments do not contain any supportable information that indicate the organism should not be exempt from regulation under proposed part 335, a final rule adding the organism to the list of exempted nonindigenous organisms would be published in the **Federal Register**.

Conversely, if APHIS determines that the available information could not support a finding that exempting the regulated organism from regulation would not present a significant plant pest risk, the request would be denied. The person requesting the exemption would be informed of the denial in writing and given the opportunity to appeal. The appeal process would be set forth in proposed § 335.5(b). The denial of an exemption request would not preclude the person who had requested the exemption from applying for a permit for the introduction of the same regulated organism.

There may be occasions where APHIS determines, without having received a request from a member of the public, that a regulated organism could be exempted from regulation under this proposed part without presenting a significant plant pest risk. Therefore, proposed § 335.5(c) provides that in such cases, APHIS would publish a notice of proposed rulemaking in the **Federal Register**, proposing to add the organism to the list of exempted nonindigenous organisms in proposed § 335.5(d). If the public comment period did not produce any supportable information that indicated the organism should not be exempted from regulation, a final rule adding the organism to the list of exempted nonindigenous organisms would be published in the **Federal Register**.

In this proposed rule, the list of exempted nonindigenous organisms in proposed § 335.5(d) consists of 13 types of organisms that APHIS believes should be exempted from regulation under proposed part 335. The exemption would apply to the introduction of these organisms into the entire United States. These organisms are:

Class	Order	Family	Scientific or common name
Arachnida	Scorpiones		Scorpions.
Arachnida	Pseudoscorpiones		Pseudoscorpions.
Arachnida	Solfugae		Windscorpions.
Arachnida	Amblypygi		Tailless whipscorpions.
Arachnida	Opiliones		Daddy-longlegs/harvestmen.
Arachnida	Aranae	Theraphosidae	Tarantulas.
Insecta	Blattodea		Cockroaches.
Insecta	Diptera	Culicidae	Mosquitoes.
Insecta	Diptera	Muscidae	*Musca domestica.*
Insecta	Diptera	Drosophilidae	*Drosophila melanogaster.*
Chilopoda			Centipedes.
Diploda			Millipedes.

A permit would not be required under proposed part 335 to introduce these organisms into the United States because, based on APHIS' experience issuing plant pest permits, we do not believe that the above types of organisms would need to be regulated under proposed part 335 in order to prevent the introduction of plant pests into the United States.

Conditions for the Introduction of Regulated Organisms (§ 335.6)

This section of the proposed regulations contains conditions that would apply to the introduction of regulated organisms. As mentioned above in the discussion of proposed § 335.4(g), any additional conditions that would apply specifically to the introduction of a particular regulated organism would be listed on the permit issued for that introduction. These proposed conditions are designed to prevent the introduction and dissemination of plant pests.

Paragraph (a) of proposed § 335.6 contains the conditions that would apply to the importation of regulated organisms. We would require regulated organisms imported into the United States to be accompanied by a permit and imported through a port of first arrival that has a plant inspection station. Given the nature of some regulated organisms, we believe it is necessary to route them through one of APHIS' plant inspection stations, which have special inspection and treatment facilities. In order to reduce the risk of the spread of plant pests, and to help prevent a regulated organism's accidental release into the environment, we would further require that imported regulated organisms be moved from the port of first arrival only to the destination specified on the permit. We would also require the regulated organism to be enclosed in a container that meets the requirements of proposed § 335.8, and that the container remains unopened until the regulated organism arrives at the destination specified on the permit. The regulated organism could not be accompanied by an organism or article not specified on the permit.

To facilitate the handling of the regulated organism at the port of first arrival, we would require that the outside of the container bear a label issued by APHIS; the label would identify the container so that it would be handled by the APHIS inspector as quickly as possible. The outside of the container in which the regulated organism is moved would also have to accurately identify the regulated organism, the person to whom the permit was issued, the destination of the regulated organism, the return address of the sender of the regulated organism, and the number of the permit authorizing the importation. By having this information accompanying the regulated organism at the time of its arrival at the port of first arrival, we could avoid unnecessary delays that might result from inadequate identification of the container's contents.

We would require the permittee to agree to notify the Administrator immediately if there is an accidental or unauthorized release of the regulated organism into the environment, or within 5 days if there are any characteristics of the regulated organism that are substantially different from those listed in the application for a permit.

In certain cases, APHIS may determine that a regulated organism must be destroyed, disposed of, or subjected to other remedial measures to prevent the spread of plant pests. Therefore, in situations where the regulated organism presents a risk of disseminating plant pests, the permittee would be required to present the regulated organism to the Administrator for disposition.

Paragraph (b) of proposed § 335.6 contains the proposed conditions that would apply to the interstate movement of regulated organisms. Regulated organisms moved interstate would have to meet, with two exceptions, the same conditions as imported regulated organisms under this section of the proposed regulations. Regulated

organisms moved interstate would have to be accompanied by a permit, moved only to the destination specified on the permit, moved in a container that meets the requirements of proposed § 335.8, and moved without any other organism or article, except as specified on the permit. Further, the container in which the regulated organisms are moved would have to remain unopened until its arrival at the destination specified on the permit. The outside of the container would have to accurately identify the regulated organism, the person to whom the permit was issued, the destination of the regulated organism, the return address of the sender of the regulated organism, and the number of the permit authorizing the interstate movement. The permittee would also have to agree to notify the Administrator immediately if there is an accidental or unauthorized release of the regulated organism into the environment, or within 5 days if there are any characteristics of the regulated organism that are substantially different from those listed in the application for a permit. In situations where the regulated organism presented a risk of disseminating plant pests, the permittee would be required to present the regulated organism to the Administrator for disposition.

For regulated organisms released into the environment, any specific conditions would be determined by the nature of the individual release. Therefore, the only conditions that would apply to the release of all regulated organism into the environment would be: (1) That the release be authorized by a permit and conducted in accordance with the conditions of the permit; (2) that the permittee notify APHIS immediately if there were an accidental or unauthorized release of the regulated organism into the environment, or within 5 days if there were any characteristics of the regulated organism that were substantially different from those listed in the application for a permit; (3) that, in situations where the regulated organism presented a risk of disseminating plant pests, the permittee would present the regulated organism to the Administrator for disposition; and (4) that specimens of the regulated organism be submitted to the collections of at least three universities, museums, scientific societies, or other organizations that maintain collections of organisms. The identification numbers assigned to the specimens would have to have been provided to APHIS prior to the release to provide a reference for APHIS.

Facilities for the Containment of Regulated Organisms (§ 335.7)

This section of the proposed regulations contains the requirements that would apply to a facility into which a regulated organism would be imported or moved interstate. Under the proposed regulations, the Administrator would approve the use of a facility for the containment of a regulated organism only if the facility met the requirements of proposed § 335.7.

We would require that the facility be constructed and operated in a manner that would prevent the escape and dissemination of the regulated organism. To that end, we would require that the facility's physical structure possess adequate water, air, and waste handling systems, as well as adequate entryways, windows, and facility structure to contain the regulated organism and prevent the unauthorized entry of organisms and people. In terms of its operation, we would require that the facility have procedural safeguards and be operated in a manner that would prevent the escape of a regulated organism and would prevent the unauthorized entry of organisms and people.

We would require that the facility have a means of inactivating or sterilizing the regulated organism and any host material, containers, or other material used for the regulated organism. We believe this requirement is necessary to ensure that, for example, unauthorized material accompanying a regulated organism could be destroyed if it constituted a plant pest risk. Additionally, there may be circumstances under which the Administrator determines that the destruction or disposal of a regulated organism is necessary to prevent the spread of a plant pest.

Because there may be cases in which the circumstances of a particular introduction dictate the need for additional safeguards, we would further require that the facility and its operation meet any other conditions the Administrator deemed necessary to prevent the escape of a regulated organism and prevent the unauthorized entry of organisms and people.

Finally, we would require that the operator of the facility maintain certain records regarding the regulated organism during the time the organism is held in the facility. The records would have to identify the regulated organism, the person from whom the regulated organism was received, the date the regulated organism was received at the facility, and the disposition of the regulated organism. Those records would be necessary for APHIS to determine whether a regulated organism has been moved and held in accordance with the conditions of the permit authorizing its introduction. Therefore, we propose to require that an APHIS inspector be allowed to inspect and copy those records during normal business hours.

Container Requirements for the Movement of Regulated Organism (§ 335.8)

Proposed § 335.8 specifies the container requirements for the importation and interstate movement of a regulated organism and any material moved with the regulated organism. A regulated organism must be properly packaged to maximize its chances of survival and minimize the possibility of an accidental release into the environment during movement. For those reasons, we would prohibit the importation and interstate movement of any regulated organism unless the regulated organism is enclosed in a container that meets the requirements of this section.

For the purposes of this section, a regulated organism and any material moved with a regulated organism would be divided into five categories: plants and plant parts, seeds, microorganisms, arthropods, and other organisms. Each category is designed to provide safeguards commensurate with the level of risk that would be presented by the importation or interstate movement of an organism in that category.

Under proposed § 335.8(b)(1), all plants or plant parts, except seeds and cells, would have to be enclosed in a sealed plastic bag of at least 0.1270 mm (5 mil) thickness or in an equivalent leakproof container, and then enclosed in a sturdy, sealed, outer container constructed of corrugated fiberboard, corrugated cardboard, wood, or other material of equivalent strength. Under proposed § 335.8(b)(2), all seeds would have to be enclosed in a sealed plastic bag of at least 0.1270 mm (5 mil) thickness or in an equivalent leakproof container. The sealed plastic bag or equivalent leakproof container would the have to be enclosed within a second sealed plastic bag of at least 0.1270 mm (5 mil) thickness or in an equivalent leakproof container. Each plastic bag or equivalent leakproof container would have to be independently capable of preventing the seeds from escaping the container. Each set of containers would have to be enclosed in a sturdy outer container constructed of corrugated fiberboard, corrugated cardboard, wood, or other material of equivalent strength.

All microorganisms, such as fungi, bacteria, nematodes, or cells, would have to be enclosed in a container as specified in paragraph (b)(3)(i) or (b)(3)(ii) of proposed § 335.8. Microorganisms not exceeding 50 mL in volume would have to be enclosed in a durable, watertight primary container, which would have to be enclosed in a second durable, watertight container (secondary container). Several primary containers could be enclosed in a single secondary container if the total volume of all the primary containers enclosed in a single secondary container did not exceed 50 mL. The space at the top, bottom, and sides between the primary and secondary containers would have to contain sufficient nonparticulate absorbent material (e.g., paper towel) to absorb the entire contents of the primary container(s). The secondary container would then have to be enclosed in an outer container constructed of corrugated fiberboard, corrugated cardboard, wood, or other material of equivalent strength.

Microorganisms that exceeded a volume of 50 mL would have to comply with the requirements described in the above paragraph. In addition, a shock-absorbing material, in volume at least equal to that of the absorbent material between the primary and secondary containers, would have to be placed at the top, bottom, and sides between the secondary container and the outer container. Single primary containers could not contain more than 1,000 mL of material. However, two or more primary containers whose combined volumes do not exceed 1,000 mL could be enclosed in a single secondary container. The maximum amount of microorganisms that could be enclosed within a single outer container could not exceed 4,000 mL.

If dry ice was used as a refrigerant, it would have to be placed between the secondary container and the outer container. The shock-absorbing material would have to be placed so that the secondary container would not become loose inside the outer container as the dry ice sublimates.

Insects, mites, or other arthropods would have to be enclosed in a container as specified for arthropods in paragraph (b)(4) of proposed § 335.8 or in a container specified for microorganisms described in paragraph (b)(3) of proposed § 335.8. Under proposed § 335.8(b)(4), arthropods (any life stage) would have to be enclosed in a primary container (insulated vacuum container, metal, or plastic) and the container would have to be sealed to prevent escape of the arthropods. The primary container would have to be enclosed in a secondary container of crushproof styrofoam or other material of equivalent strength; one or more rigid ice packs could also be enclosed in the secondary container; and sufficient packing material would have to be added around the primary container to prevent movement of the primary container within the secondary container. The secondary container would have to be enclosed in an outer container constructed of corrugated fiberboard, corrugated cardboard, wood, or other material of equivalent strength.

Any organism not covered in paragraph (b)(1), (b)(2), or (b)(4) of proposed § 335.8 that did not require continuous access to atmospheric oxygen would have to be enclosed in a container as specified in paragraph (b)(3) or (b)(4) of this section. Any organism that was not a plant and that required continuous access to atmospheric oxygen would have to be enclosed in a primary container constructed with a sturdy, crush-proof frame of wood, metal, or other material of equivalent strength, surrounded by mesh or netting of a strength and mesh size sufficient to prevent the escape of the smallest organism in the container, with the edges and seams of the mesh or netting sealed to prevent the escape of organisms. Each primary container would have to be enclosed in a larger secondary container constructed of wood, metal, or other material of equivalent strength. The primary and secondary containers would have to be enclosed in an outer container constructed of corrugated fiberboard, corrugated cardboard, wood, or other material of equivalent strength, which outer container could have air holes or spaces in the sides and/or ends of the container, provided that the outer container would have to retain sufficient strength to prevent crushing of the primary and secondary containers.

We believe that these proposed requirements would be sufficient to prevent the accidental release of the regulated organism and any material moved with the organism.

We understand that there may be unique circumstances, such as the nature, volume, or life stage of a regulated organism, that could make these proposed container requirements inappropriate for the importation of interstate movement of a particular regulated organism. For that reason, we would allow a person to request a variance from the container requirements by submitting a written statement to APHIS describing why the applicable container requirements are inappropriate for the regulated organism that the person proposes to move, and what container requirements the person would use in lieu of the applicable container requirements. APHIS would make a decision regarding the variance request and would inform the applicant of the decision prior to the issuance of a permit. If APHIS granted the variance request, a permit would be issued if APHIS had determined from its review of the permit application that the regulated organism could be introduced without risk of plant pest dissemination. If APHIS denied the variance request, the applicant could submit an appeal to the Administrator by following the procedure detailed in the proposed regulations; however, no permit would be issued until such time as the appeal was resolved and the applicant agreed to abide by APHIS' decision.

Costs and Charges (§ 335.9)

Proposed § 335.9 relates to costs and charges that would apply in connection with the services of an APHIS inspector. It is the policy of APHIS that the services of an APHIS inspector during regularly assigned hours of duty and at the usual places of duty be furnished without cost to persons requiring inspection, unless a user fee is payable under 7 CFR part 354. There are, however, no user fees currently in place that would affect the permitting or inspection activities that would be carried out under the proposed regulations.

Proposed § 335.9 further provides that any costs or charges incidental to inspection or to compliance with the provisions of this part, other than an APHIS inspector's services, are not the responsibility of the USDA.

Executive Order 12866 and Regulatory Flexibility Act

This proposed rule has been determined to be significant and was reviewed by the Office of Management and Budget under Executive Order 12866.

We are proposing to establish comprehensive regulations governing the introduction (importation, interstate movement, and release into the environment) of certain regulated organisms. The proposed regulations would clarify the permit application process and provide a means of screening regulated organisms prior to their introduction to determine the potential plant pest risk associated with a particular introduction. According to the OTA report cited above, harmful nonindigenous species have caused an economic loss of approximately $97 billion between 1906 and 1991. When weighed against that figure, the costs of

implementing or complying with these proposed regulations are insignificant.

The proposed regulations clearly set out the information that APHIS would require to be able to make a decision concerning the plant pest risk associated with a regulated organism, so prospective applicants would not find themselves wasting scarce resources seeking clarification or interpretation of the existing plant pest regulations. These improvements are expected to encourage and facilitate research in the area of nonindigenous organisms.

In 1992, APHIS issued 3,375 permits under 7 CFR part 330 for the importation, interstate movement, or release into the environment of organisms, nearly 3 times the 1982 total of 1,167 permits issued. The average total cost (using the 1992 data) to APHIS to process an application was approximately $139. No user fees have been charged to the applicants.

Under the current system, the processing of an application can be a lengthy process. It takes, on average, approximately 5 to 30 days to issue a permit for importation or interstate movement of an organism, while it may take as long as a year to process an application for the release of an organism into the environment. This time variability is partly a function of the level of risk assessment required, but the adequacy of the initial information provided by the applicant plays an important role. We anticipate that the permit application process set forth in the proposed regulations would speed up the permit application review process by ensuring that sufficient data are provided by applicants from the start of APHIS' review of the application.

The applicants for permits to introduce nonindigenous organisms have been researchers, scientists, private businesses, and agricultural producers. Approximately two-thirds of all applicants have been nonprofit entities. Most of the applicants are considered to be small entities. Of the three types of permits that would be issued under these proposed regulations—importation, interstate movement, and release into the environment—we believe that an application for a permit to release a regulated organism into the environment would take the longest to prepare. We estimate that a Ph.D. researcher working with clerical support for approximately 2 weeks to prepare an application for a permit to release a regulated organism into the environment would cost, based on their estimated salaries, less than $5,000. We anticipate that the costs of preparing a permit application for the majority of the regulated organisms covered by the proposed regulations would not be significant because most, if not all, of the data that would be required would already be known to the applicant, thus minimizing the amount of time spent preparing a permit application.

Under these circumstances, the Administrator of the Animal and Plant Health Inspection Service has determined that this action would not have a significant economic impact on a substantial number of small entities.

Executive Order 12372

This program/activity is listed in the Catalog of Federal Domestic Assistance under No. 10.025 and is subject to Executive Order 12372, which requires intergovernmental consultation with State and local officials. (See 7 CFR part 3015, subpart V.)

Executive Order 12778

This proposed rule has been reviewed under Executive Order 12778, Civil Justice Reform. If this proposed rule is adopted: (1) All State and local laws and regulations that are inconsistent with this rule will be preempted; (2) no retroactive effect will be given to this rule; and (3) administrative proceedings will not be required before parties may file suit in court challenging this rule.

National Environmental Policy Act

APHIS has determined that the preparation of an environmental assessment was not necessary for the proposed regulations. The proposed regulations are procedural in nature and would not irrevocably commit APHIS to any decision concerning the issuance of any permit for the release into the environment of a regulated organism. As a procedural regulation, the proposed rule would advise persons of what data to submit in a permit application so that APHIS would be able to decide whether a permit could be granted. For an application for a permit to release a regulated organism into the environment, the required data would be used to prepare an environmental assessment as part of APHIS' decision-making process. APHIS would retain the authority to grant, deny, or revoke a permit on a case-by-case basis.

Paperwork Reduction Act

In accordance with the Paperwork Reduction Act of 1980 (44 U.S.C. 3501 *et seq.*), the information collection or recordkeeping requirements included in this proposed rule will be submitted for approval to the Office of Management and Budget. Please send written comments to the Office of Information and Regulatory Affairs, OMB, Attention: Desk Officer for APHIS, Washington, DC 20503. Please send a copy of your comments to: (1) Chief, Regulatory Analysis and Development, PPD, APHIS, USDA, P.O. Drawer 810, Riverdale, MD 20738, and (2) Clearance Officer, OIRM, USDA, room 404–W, 14th Street and Independence Avenue SW., Washington, DC 20250.

List of Subjects in 7 CFR Part 335

Imports, Packaging and containers, Plant diseases and pests, Reporting and recordkeeping requirements, Transportation.

Accordingly, 7 CFR part 335 would be added to read as follows:

PART 335—INTRODUCTION OF NONINDIGENOUS ORGANISMS

Sec.
335.1 Definitions.
335.2 Regulated organisms.
335.3 General restrictions on the introduction of regulated organisms.
335.4 Permits for the introduction of regulated organisms.
335.5 Nonindigenous organisms exempted from regulation under this part.
335.6 Conditions for the introduction of regulated organisms.
335.7 Facilities for the containment of regulated organisms.
335.8 Container requirements for the movement of regulated organisms.
335.9 Costs and charges.

Authority: 7 U.S.C. 150aa-150jj, 151–164a, 167, and 1622(n); 31 U.S.C. 9701; 42 U.S.C. 4331 and 4332; 7 CFR 2.17, 2.51, and 371.2(c).

§ 335.1 Definitions.

Terms used in the singular form in this part shall be construed as the plural, and vice versa, as the case may demand. The following terms, when used in this part, shall be construed, respectively, to mean:

Administrator. The Administrator of the Animal and Plant Health Inspection Service, U.S. Department of Agriculture, or any other individual to whom the Administrator delegates authority to act in his or her stead.

Animal and Plant Health Inspection Service (APHIS). The Animal and Plant Health Inspection Service of the U.S. Department of Agriculture.

APHIS inspector. Any employee of the Animal and Plant Health Inspection Service or any other individual authorized by the Administrator to enforce this part.

Environment. All land, air, and water; and all living organisms in association with land, air, and water.

Established. The condition of a species that has formed a self-sustaining, free-living population at a given location.

Established range. The area in which a species maintains a self-sustaining, free-living population.

Import. To bring into the territorial limits of the United States.

Interstate. From any State into or through any other State, or within the District of Columbia, American Samoa, Guam, the Virgin Islands of the United States, or any other territory or possession of the United States.

Introduce (introduction). To move or to attempt to move into or through the United States, to release or attempt to release into the environment, or to move or attempt to move interstate.

Move (moving, movement). To ship, offer for shipment, enter, offer for entry, import, offer for importation, receive for transportation, carry, mail, or otherwise transport or allow to be transported into, through, or within the United States.

Nonindigenous organism. Any organism proposed for introduction into any area of the United States beyond its established range.

Permit. An authorization issued by the Administrator for the introduction of a regulated organism.

Person. Any individual, partnership, corporation, company, society, association, or other legal entity or organized group.

Plant. Any stage of any member of the plant kingdom including, but not limited to, trees, plant tissue cultures, plantlet cultures, pollen, shrubs, vines, cuttings, grafts, scions, buds, roots, seeds, cells, tubers, and stems.

Plant pest. Any living stage of any insects, mites, nematodes, slugs, snails, protozoa, or other invertebrate animals, bacteria, fungi, other parasitic plants or reproductive parts of parasitic plants, viruses, or any organisms similar to or allied with any of the organisms previously identified in this definition, or any infectious substances, which can directly or indirectly injure or cause disease or damage in any plants or plant parts, or any processed, manufactured, or other products of plants.

Plant product. Any processed or manufactured plant or plant part.

Port of first arrival. The land area (such as a seaport, airport, or land border station) where a person, or a land, water, or air vehicle, first arrives after entering the United States, and where inspection of articles is carried out by APHIS inspectors.

Regulated organism. Any living stage of any nonindigenous organism belonging to the taxa listed in § 335.2(a) that is not listed in § 335.2(b) or exempt in accordance with § 335.5.

Release into the environment. The use of a regulated organism outside the constraints of physical confinement.

State. Any State, the District of Columbia, American Samoa, Guam, the Northern Mariana Islands, Puerto Rico, the Virgin Islands of the United States, and any other territory or possession of the United States.

United States. All of the States.

§ 335.2 Regulated organisms.

(a) The taxonomic groups listed in paragraph (a)(1) of this section include organisms that are known plant pests. Therefore, there is reason to believe that other organisms within the taxonomic groups listed in paragraph (a)(1) of this section may be or may contain plant pests and, except for those organisms listed in paragraph (b) of this section or exempt in accordance with § 335.5, are regulated organisms. Within any taxonomic group included on the list in this paragraph, the lowest unit of classification listed is the taxonomic group that may contain regulated organisms. Organisms belonging to all lower taxa contained within the groups listed in this paragraph are included as organisms that may be or may contain plant pests.

(1) Group:

Viroids
Superkingdom Prokaryotae
Kingdom Virus

All members of groups containing plant viruses, and all other plant and insect viruses.

Kingdom Monera

Division Bacteria

Family Pseudomonadaceae
Genus Pseudomonas
Genus Xanthomonas
Family Rhizobiaceae
Genus Rhizobium
Genus Bradyrhizobium
Genus Agrobacterium
Genus Phyllobacterium
Family Enterobacteriaceae
Genus Erwinia
Family Streptomycetaceae
Genus Streptomyces
Family Actinomycetacease
Genus Actinomyces

Coryneform group

Genus Clavibacter
Genus Arthrobacter
Genus Curtobacterium
Genus Corynebacteria
Gram-negative phloem-limited bacteria associated with plant diseases.
Gram-negative xylem-limited bacteria associated with plant diseases.
And all other bacteria associated with plant or insect diseases.
Rickettsiaceae
Rickettsial-like organisms associated with insect diseases.

Class Mollicutes

Order Mycoplasmatales
Family Spiroplasmataceae
Genus Spiroplasma
Mycoplasma-like organisms associated with plant diseases.
Mycoplasma-like organisms associated with insect diseases.

Superkingdom Eukaryotae

Kingdom Plantae

Subkingdom Thallobionta

Division Chlorophyta

Genus Cephaleuros
Genus Rhodochytrium
Genus Phyllosiphon

Division Myxomycota

Class Plasmodiophoromycetes

Division Eumycota

Class Chytridiomycetes

Order Chytridiales

Class Oomycetes

Order Lagenidiales
Family Lagenidiaceae
Family Olpidiopsidaceae
Order Peronosporales
Family Albuginaceae
Family Peronosporaceae
Family Pythiaceae
Order Saprolegniales
Family Saprolegniaceae
Family Leptolegniellaceae

Class Zygomycetes

Order Mucorales
Family Choanephoraceae
Family Mucoraceae
Family Entomophthoraceae

Class Hemiascomycetes

Family Protomycetaceae
Family Taphrinaceae

Class Loculoascomycetes

Order Myriangiales
Family Elsinoeaceae
Family Myriangiaceae
Order Asterinales
Order Dothideales
Order Chaetothyriales
Order Hysteriales
Family Parmulariaceae
Family Phillipsiellaceae
Family Hysteriaceae
Order Pleosporales
Order Melanommatales

Class Plectomycetes

Order Eurotiales
Family Ophiostomataceae
Order Ascophaerales

Class Pyrenomycetes

Order Erysiphales
Order Meliolales

Order Xylariales
Order Diaporthales
Order Hypocreales
Order Clavicipitales

Class Discomycetes

Order Phacidiales
Order Helotiales
Family Ascocorticiceae
Family Hemiphacidiaceae
Family Dermataceae
Family Sclerotiniaceae
Order Cytarriales
Order Medeolariales
Order Pezziales
Family Sarcosomataceae
Family Sarcoscyphaceae

Class Teliomycetes

Class Phragmobasidiomycetes

Family Auriculariaceae
Family Ceratobasidiaceae

Class Hymenomycetes

Order Exobasidiales
Order Agaricales
Family Corticiaceae
Family Hymenochaetaceae
Family Echinodontiaceae
Family Fistulinaceae
Family Clavariaceae
Family Polyporaceae
Family Tricholomataceae

Class Hyphomycetes

Class Coelomycetes

And all other fungi associated with plant or insect diseases.

Subkingdom Embryobionta

Division Magnoliophyta

Family Balanophoraceae—parasitic species
Family Cuscutaceae—parasitic species
Family Hydnoraceae—parasitic species
Family Krameriaceae—parasitic species
Family Lauraceae—parasitic species
Genus Cassytha
Family Lennoaceae—parasitic species
Family Loranthaceae—parasitic species
Family Myzodendraceae—parasitic species
Family Olacaceae—parasitic species
Family Orobanchaceae—parasitic species
Family Rafflesiaceae—parasitic species
Family Santalaceae—parasitic species
Family Scrophulariaceae—parasitic species
Genus Bartsia
Genus Buchnera
Genus Buttonia
Genus Castilleja
Genus Centranthera
Genus Cordylanthus
Genus Dasistoma
Genus Euphrasia
Genus Gerardia
Genus Harveya
Genus Hyobanche
Genus Lathraea
Genus Melampyrum
Genus Melasma
Genus Orthantha
Genus Orthocarpus
Genus Pedicularis
Genus Rhamphicarpa
Genus Rhinanthus
Genus Schwalbea
Genus Seymeria
Genus Siphonostegia
Genus Sopubia
Genus Tozzia
Family Viscaceae—parasitic species

Kingdom Animalia

Subkingdom Protozoa

Genus Phytomonas
And all Protozoa associated with insect diseases.

Subkingdom Eumetazoa

Phylum Nemata

Class Secernentea

Order Tylenchida
Family Anguinidae
Family Belonolaimidae
Family Caloosiidae
Family Criconematidae
Family Dolichodoridae
Family Fergusobiidae
Family Hemicycliophoridae
Family Heteroderidae
Family Hoplolaimidae
Family Meloidogynidae
Family Nacobbidae
Family Neotylenchidae
Family Nothotylenchidae
Family Paratylenchidae
Family Pratylenchidae
Family Tylenchidae
Family Tylenchulidae
Order Aphelenchida
Family Aphelenchoididae

Class Adenophorea

Order Dorylaimida
Family Longidoridae
Family Trichodoridae

Phylum Mollusca

Class Gastropoda

Subclass Pulmonata
Order Basommatophora
Superfamily Planorbacea
Order Stylommatophora
Subfamily Strophocheilacea
Family Succineidae
Superfamily Achatinacae
Superfamily Arionacae
Superfamily Limacacea
Superfamily Helicacea
Order Systellommatophora
Superfamily Veronicellacea

Phylum Arthropoda

Class Arachnida

Order Parasitiformes
Suborder Mesostigmata
Superfamily Ascoidea
Superfamily Dermanyssoidea
Order Acariformes
Suborder Prostigmata
Superfamily Eriophyoidea
Superfamily Tetranychoidea
Superfamily Eupodoidea
Superfamily Tydeoidea
Superfamily Erythraenoidea
Superfamily Trombidioidea
Superfamily Hydryphantoidea
Superfamily Tarsonemoidea
Superfamily Pyemotoidea
Suborder Astigmata
Superfamily Hemisarcoptoidea
Superfamily Acaroidea

Class Diplopoda

Order Polydesmida

Class Insecta

Order Collembola
Family Sminthoridae
Order Isoptera
Order Thysanoptera
Order Orthoptera
Family Acrididae
Family Gryllidae
Family Gryllacrididae
Family Gryllotalpidae
Family Phasmatidae
Family Ronaleidae
Family Tettigoniidae
Family Tetrigidae
Order Hemiptera
Family Thaumastocoridae
Family Aradidae
Superfamily Piesmatoidea
Superfamily Lygaeoidea
Superfamily Idiostoloidea
Superfamily Coreoidea
Superfamily Pentatomoidea
Superfamily Pyrrhocoroidea
Superfamily Tingoidea
Superfamily Miroidea
Order Homoptera
Order Coleoptera
Family Anobiidae
Family Apionidae
Family Anthribidae
Family Bostrichidae
Family Brentidae
Family Bruchidae
Family Buprestidae
Family Byturidae
Family Cantharidae
Family Carabidae
Family Cerambycidae
Family Chrysomelidae
Family Coccinellidae
Subfamily Epilachninae
Family Curculionidae
Family Dermestidae
Family Elateridae
Family Hydrophilidae
Genus Helophorus
Family Lyctidae
Family Meloidae

Family Mordellidae
Family Platypodidae
Family Scarabaeidae
Subfamily Melolonthinae
Subfamily Rutelinae
Subfamily Cetoniinae
Subfamily Dynastinae
Family Scolytidae
Family Selbytidae
Family Tenebrionidae
Order Lepidoptera
Order Diptera
Family Agromyzidae
Family Anthomyiidae
Family Cecidomyiidae
Family Chloropidae
Family Ephydridae
Family Lonchaeidae
Family Muscidae
Genus Atherigona
Family Otitidae
Genus Euxeta
Family Syrphidae
Family Tephritidae
Family Tipulidae
Order Hymenoptera
Family Apidae
Family Aphelinidae
Family Braconidae
Genus Perilitus
Family Caphidae
Family Chalcidae
Family Cynipidae
Family Diapriidae
Genus Ismarus
Family Encyrtidae
Family Eulophidae
Family Eurytomidae
Family Formicidae
Family Ichneumonidae
Subfamily Cryptinae
Subfamily Diplazontinae
Subfamily Gelinae
Subfamily Mesochorinae
Subfamily Ephialtinae
Family Psilidae
Family Pteromalidae
Family Scelionidae
Genus Gryon
Genus Scelio
Family Signiphoridae
Family Siricidae
Family Tenthredinidae
Family Torymidae
Family Trichogrammatidae
Family Xylocopidae

(2) Unclassified organisms and organisms whose classification is unknown.

(b) An organism from a taxonomic group listed in paragraph (a) of this section is not a regulated organism under this part if the introduction of that organism is regulated under any of the following regulations:

(1) Live bees other than honeybees of the genus *Apis* regulated under § 319.76 of this chapter;

(2) Plant pests regulated under § 330.200 of this chapter;

(3) Live honeybees of the genus *Apis* regulated under part 322 of this chapter;

(4) Organisms genetically engineered through recombinant DNA techniques regulated under part 340 of this chapter;

(5) Noxious weeds regulated under part 360 of this chapter;

(6) Organisms and vectors that may introduce or disseminate contagious animal diseases regulated under 9 CFR part 122; and

(7) Etiologic microorganisms that cause disease in humans (including bacteria, bacterial toxins, viruses, fungi, rickettsia, protozoans, arthropods, parasites, and the hosts and vectors that may carry these etiological microorganisms) that are regulated under 42 CFR part 71, unless the microorganism, host, or vector could also be a plant pest.

§ 335.3 General restrictions on the introduction of regulated organisms.

(a) No person shall introduce any regulated organism unless the introduction is authorized by a permit issued in accordance with § 335.4 and is in conformity with this part.

(b) Any regulated organism that is introduced not in compliance with this part shall be subject to destruction, disposal, or the remedial measures that the Administrator determines are necessary to prevent the dissemination into the United States, or dissemination within the United States, of plant pests.

§ 335.4 Permits for the introduction of regulated organisms.

(a) *Permit applications.* An application for a permit to introduce a regulated organism shall be submitted to the Animal and Plant Health Inspection Service, Plant Protection and Quarantine, Biological Assessment and Taxonomic Support, 4700 River Road Unit 133, Riverdale, MD 20737–1236. The application shall state the type of permit being sought by the applicant (import permit, interstate movement permit, or permit for release into the environment).

(1) A person may apply for a permit for the importation or interstate movement of regulated organisms within a taxon of a higher level than species (genus, family, order, class, phylum) in lieu of submitting an application for the importation or interstate movement of each species of regulated organism. A permit issued for the importation or interstate movement of regulated organisms within a taxon of a higher level than species will be valid only for the importation or interstate movement of those regulated organisms imported or moved interstate between those locations specified on the permit. If a person seeks to import or move interstate a regulated organism not specified on the permit, or to import or move interstate a regulated organism from or to a location not listed on the permit, a new application must be submitted to the Administrator.

(2) If an application contains any information deemed to be trade secret or confidential business information (CBI), each page of the application must be marked ''CBI Copy'' and those portions of the application that are deemed CBI must be so designated. In addition, a second copy of the application shall be submitted that has all such CBI deleted and is marked ''CBI Deleted'' on each page of the application where CBI was deleted.

(3) An application for a permit for the importation or interstate movement of a regulated organism must be received by the Administrator at least 30 days prior to each importation or interstate movement. An application for a permit for the release into the environment of a regulated organism must be received by the Administrator at least 120 days prior to the release into the environment.

(4) The Animal and Plant Health Inspection Service (APHIS), within 15 days of the receipt of an application for a permit for the importation or interstate movement of a regulated organism and within 30 days of the receipt of an application for a permit for the release into the environment of a regulated organism, will review the application for a permit to determine whether the application contains all of the information required by this section. If the application contains all of the information required by this section, APHIS will notify the person applying for a permit of the date that the application was received, which will be the commencement date of a 30-day review period for applications for importation or interstate movement or a 120-day review period for applications for release into the environment. If the application does not contain all of the information required by this section, APHIS will advise the person applying for a permit of the additional information that must be received by the Administrator to complete the application for a permit. APHIS will commence the applicable review period upon receipt of the additional information, if, with the addition of that information, the application contains all of the information required by the section. When APHIS determines that an application contains all the information required by this section,

APHIS will submit a copy of the application marked ''CBI Deleted'' or ''No CBI'' to the State department of agriculture of the State where the introduction of the regulated organism is planned for the State's review and comment.

(5) Statutory or regulatory mandates may require that APHIS consult with other Federal agencies during its review of an application to release a regulated organism into the environment. In such cases, APHIS will notify the applicant, in writing, that APHIS is required to consult with other Federal agencies and that the consultation may result in the review period extending beyond the 120 days provided for in paragraph (a)(4) of this section.

(b) *Data requirements for all permit applications.* All applications for permits to introduce a regulated organism shall contain the following information:

(1) The name, address, telephone number, and facsimile number of the person applying for the permit;

(2) The scientific name, common name, and any other information that serves to identify the regulated organism as specifically as possible (including the subspecies, race, and strain of the regulated organism) and a description of the methods used to establish the identity of the regulated organism;

(3) A description of the measures that have been taken to establish that the regulated organism and any material associated with the introduction of the regulated organism do not contain any organisms not identified in the permit application;

(4) The intended use of the regulated organism;

(5) A description of the life cycle, biology, and ecology of the regulated organism;

(6) Whether the regulated organism has been genetically modified (if so, include a description of the genetic modification);

(7) The country and locality where the regulated organism was originally collected from nature, and the countries and localities where the regulated organism has been propagated and maintained since its collection;

(8) The established range of the regulated organism in the United States;

(9) The number of specimens or units of the regulated organism to be introduced;

(10) A description of any host material, substrate, medium, or organism that will accompany the regulated organism;

(11) If the application is for a permit to import a regulated organism, the additional information required by paragraph (c) of this section;

(12) If the application is for a permit to move a regulated organism interstate, the additional information required by paragraph (d) of this section; and

(13) If the application is for a permit to release a regulated organism into the environment, the additional information required by paragraph (e) of this section.

(c) *Import permits.* In addition to the information required by paragraph (b) of this section, an application for a permit to import a regulated organism shall contain the following information:

(1) The country and locality from which the regulated organism will be exported to the United States;

(2) The address, telephone number, and facsimile number of the person in the exporting country from whom the regulated organism will be received;

(3) The port of first arrival in the United States through which the regulated organism is intended to be imported;

(4) The address (including the county), telephone number, and facsimile number of the facility to which the regulated organism will be delivered;

(5) A detailed description of the procedures, processes, and safeguards that will be used in the destination facility to prevent the escape and dissemination of the regulated organism and any material accompanying the regulated organism;

(6) The means by which the regulated organism will be imported into the United States (air mail, air freight, baggage, or motor vehicle); and

(7) The planned date(s) of the importation of the regulated organism.

(d) *Interstate movement permits.* In addition to the information required by paragraph (b) of this section, an application for a permit for the interstate movement of a regulated organism shall contain the following information:

(1) The State and locality from which the regulated organism will be moved interstate;

(2) The address, telephone number, and facsimile number of the person in the originating State from whom the regulated organism will be received;

(3) The address (including the county), telephone number, and facsimile number of the facility to which the regulated organism will be moved;

(4) A detailed description of the procedures, processes, and safeguards that will be used at the destination facility to prevent the escape and dissemination of the regulated organism and any material accompanying the regulated organism;

(5) The means by which the regulated organism will be moved interstate (air mail, air freight, baggage, or motor vehicle); and

(6) The planned date(s) of the interstate movement of the regulated organism.

(e) *Release permits.* In addition to the information required by paragraph (b) of this section, an application for a permit to release a regulated organism into the environment shall contain the following information:

(1) The purpose of the release into the environment of the regulated organism;

(2) The anticipated date(s) of the release into the environment of the regulated organism;

(3) A description, including methods of release and release site(s), of the intended release into the environment of the regulated organism;

(4) A description of all testing and review that has been conducted to assess the effects of the regulated organism on the environment;

(5) The effect of the regulated organism on the environment in its established range;

(6) The host specificity of the regulated organism under both artificial and natural conditions; and

(7) References to any published and unpublished documents that support the information required by paragraphs (e)(4), (e)(5), and (e)(6) of this section. If available to the applicant, copies of any unpublished referenced documents must be attached to the application.

(f) *Facility and release site inspection.* The Administrator may inspect the facility into which a regulated organism proposed for importation or interstate movement is intended to be moved to determine whether the facility will meet the requirements of § 335.7. The Administrator may also inspect the site where a regulated organism is proposed to be released into the environment to assess the conditions described in the permit application.

(g) *Administrative action on applications.* After APHIS has reviewed an application which contains all the information required by this section, a permit for the introduction of the regulated organism will be issued or denied.

(1) If a permit is issued, the permit will specify the applicable conditions under this part for the introduction of the regulated organism. Each permit issued will be numbered and, unless revoked pursuant to paragraph (h) of this section, will be valid from the date of issuance until the expiration date specified on the permit. The expiration

date specified on the permit will be no more than 10 years from the date of issuance of the permit.

(2) If a permit is denied, the applicant will be promptly informed, in writing, of the reasons the permit was denied and given the opportunity to appeal the denial in accordance with paragraph (h) of this section. A permit application will be denied if:

(i) The applicant has had a permit revoked under paragraph (h) of this section during the 12 months prior to APHIS' receipt of the completed permit application, unless the revoked permit has been reinstated upon appeal.

(ii) An APHIS inspector is not allowed to inspect the facility into which a regulated organism proposed for importation or interstate movement is to be moved, or the site where a regulated organism is proposed to be released into the environment.

(iii) The Administrator determines, based on a review of the available information, that the introduction of the regulated organism would present a significant risk of plant pest dissemination and no adequate safeguards could be arranged to mitigate that risk.

(h) *Denial or revocation of permit; appeals.* Any permit that has been issued may be revoked, in writing, by an APHIS inspector or the Administrator if the APHIS inspector or the Administrator determines that the person to whom the permit was issued, or his or her agents or employees, has not complied with any condition specified on the permit or has violated any requirement of this part. Any person whose permit has been revoked or any person who has been denied a permit may appeal the decision in writing to the Administrator within 10 days after receiving the written notification of the revocation or denial. The appeal must state all of the facts and reasons upon which the person relies to show that the permit was wrongfully revoked or denied. The Administrator will grant or deny the appeal as promptly as circumstances allow and will state, in writing, the reasons for the decision. If there is a conflict as to any material fact and the person whose permit application was denied or permit was revoked requests a hearing, a hearing will be held to resolve the conflict. Rules of practice concerning the hearing will be adopted by the Administrator.

(i) *Recordkeeping.* If a permit is issued for the introduction of a regulated organism, the person to whom the permit is issued must maintain records for 10 years that identify the regulated organism (as specifically as can be determined), identify the characteristics of the regulated organism, and state the disposition of the regulated organism. An APHIS inspector shall, during normal business hours, be allowed to inspect and copy the records required to be maintained in accordance with this paragraph.

§ 335.5 Nonindigenous organisms exempted from regulation under this part.

(a) In accordance with the procedures set forth in paragraphs (b) and (c) of this section, a regulated organism may be exempted from regulation under this part. A nonindigenous organism exempted from regulation under this part may be introduced without restriction under this part into one or more of the areas listed in this paragraph:

(1) The entire United States;

(2) The continental United States (the conterminous 48 States and Alaska);

(3) Hawaii;

(4) Puerto Rico;

(5) The Northern Mariana Islands; or

(6) Any other U.S. territory or possession.

(b) *Requests for exemption.* (1) Any person who believes that a regulated organism should be exempted from regulation under this part shall submit a written request to the Animal and Plant Health Inspection Service, Plant Protection and Quarantine, Biological Assessment and Taxonomic Support, 4700 River Road Unit 133, Riverdale, MD 20737–1236. The request for an exemption from regulation under this part must include:

(i) The name, address, telephone number, and facsimile number of the person submitting the request for the exemption;

(ii) The scientific name, common name, and any other information that serves to identify the regulated organism as specifically as possible (including the subspecies, race, and strain of the regulated organism) that the person believes should be exempted from regulation under this part and a description of the methods used to establish the identity of the regulated organism;

(iii) A description of the life cycle, biology, and ecology of the regulated organism;

(iv) Whether the regulated organism has been genetically modified (if so, include a description of the genetic modification);

(v) The established range of the regulated organism in the United States;

(vi) Whether the regulated organism has been released into the environment in the area or areas of the United States for which the exemption is being requested and, if so, the location and date of the release;

(vii) A description of all testing and review that has been conducted to assess the effects of the regulated organism on the environment;

(viii) The effect of the regulated organism on the environment in its established range;

(ix) The host specificity of the regulated organism under both artificial and natural conditions;

(x) References to any published and unpublished documents that support the information required by paragraphs (b)(1)(ii) through (b)(1)(ix) of this section. If available to the applicant, copies of any unpublished referenced documents must be attached to the application; and

(xi) A list of at least three universities, museums, scientific societies, or other organizations that maintain collections of organisms to which specimens of the regulated organism have been submitted, and the identification numbers assigned to the specimens.

(2) Within 30 days of receiving the request for exemption from regulation under this part, APHIS will review the request to determine whether the request contains all the information required by this section. If the request contains all of the information required by this section, APHIS will notify the person requesting the exemption of the date that the request was received, which will be the commencement date of a 120-day review period for requests for exemption. If the request does not contain all of the information required by this section, APHIS will advise the person submitting the request for an exemption of the additional information that must be received by the Administrator to complete the request for an exemption. APHIS will commence the review period upon receipt of the additional information, if, with the addition of that information, the request contains all of the information required by the section.

(3) If, based upon its review of the request, APHIS concludes that exempting the regulated organism from regulation under this part would not present a significant plant pest risk, APHIS will prepare a notice of proposed rulemaking for publication in the **Federal Register** proposing to add the organism to the list in paragraph (d) of this section of nonindigenous organisms exempt from regulation under this part.

(4) If, based upon its review of the request, APHIS is unable to conclude that exempting the regulated organism from regulation would not present a significant plant pest risk, the request for an exemption from regulation under

this part will be denied. The person requesting the exemption will be informed, in writing, of the denial and the reasons for APHIS' inability to find that exempting the regulated organism from regulation under this part would not present a significant plant pest risk. Any person whose request has been denied may appeal the decision, in writing, to the Administrator within 10 days of receiving the written notification of the denial. The appeal must state all of the facts and reasons upon which the person relies to show that the request was wrongfully denied. The Administrator will grant or deny the appeal, in writing, stating the reasons for the denial as promptly as circumstances allow. If there is a conflict as to any material fact and the person whose request was denied requests a hearing, a hearing will be held to resolve the conflict. Rules of practice concerning the hearing will be adopted by the Administrator.

(c) If, absent any request from the public, APHIS concludes that exempting any nonindigenous organism from regulation would not present a significant plant pest risk, APHIS will prepare a notice of proposed rulemaking for publication in the **Federal Register** proposing to add the organism to the list in paragraph (d) of this section of nonindigenous organisms exempted from regulation under this part.

(d) *Exempted nonindigenous organisms.* The following nonindigenous organisms may be introduced without restriction under this part into the area or areas of the United States specified:

Class	Order	Family	Scientific or common name	Where exempt [1]
Arachnida	Scorpiones		scorpions	(1)
Arachnida	Pseudoscor-piones		pseudoscorpions	(1)
Arachnida	Solfugae		windscorpions	(1)
Arachnida	Amblypygi		tailless whipscorpions	(1)
Arachnida	Opiliones		daddy-longlegs, harvestmen	(1)
Arachnida	Aranae	Theraphosidae	tarantulas	(1)
Insecta	Blattodea		cockroaches	(1)
Insecta	Diptera	Culicidae	mosquitoes	(1)
Insecta	Diptera	Muscidae	*Musca domestica*	(1)
Insecta	Diptera	Drosophilidae	*Drosophila melanogaster*	(1)
Chilopoda			centipedes	(1)
Diploda			millipedes	(1)

[1] Areas of exemption are as follows: (1) The entire United States; (2) The continental United States (the conterminous 48 States and Alaska); (3) Hawaii; (4) Puerto Rico; (5) The Northern Mariana Islands; (6) Any other U.S. territory or possession.

§ 335.6 Conditions for the introduction of regulated organisms.

(a) *Importation.* A regulated organism may be imported into the United States only if:

(1) The regulated organism is accompanied by a permit issued in accordance with § 335.4.

(2) The regulated organism is imported through a port of first arrival designated by an asterisk in § 319.37–14(b) of this chapter or is mailed to APHIS at a port of first arrival designated by an asterisk in § 319.37–14(b) of this chapter;

(3) Following its arrival at the port of first arrival, the regulated organism is not moved to any destination other than the destination listed on the permit;

(4) The regulated organism is moved in a container that meets the requirements of § 335.8;

(5) The container in which the regulated organism is being moved remains unopened until its arrival at the destination specified on the permit;

(6) The regulated organism is not accompanied by any other organism or article, except as specified on the permit;

(7) The outside of the container in which the regulated organism is being imported bears a label issued by APHIS;

(8) The outside of the container in which the regulated organism is being moved accurately identifies the regulated organism, the person to whom the permit was issued, the destination of the regulated organism, the return address of the sender of the regulated organism, and the number of the permit authorizing the importation;

(9) The person to whom the permit has been issued agrees to notify the Administrator of:

(i) The accidental or unauthorized release into the environment of the regulated organism, immediately after the accidental or unauthorized release into the environment occurs; and

(ii) Any characteristics of the regulated organism that are substantially different from those listed in the application for a permit, no later than 5 days after identifying the characteristics;

(10) The person to whom the permit has been issued agrees to present the regulated organism or any material accompanying the regulated organism to the Administrator for destruction, disposal, or the remedial measures the Administrator determines necessary to prevent the spread of plant pests, and to allow the Administrator to destroy, dispose of, or apply remedial measures to the regulated organism or any material accompanying the regulated organism if the Administrator determines that such action is necessary to prevent the spread of plant pests; and

(11) The regulated organism is imported in accordance with any other conditions specified on the permit.

(b) *Interstate movement.* A regulated organism may be moved interstate only if:

(1) The regulated organism is accompanied by a permit issued in accordance with § 335.4.

(2) The regulated organism is not moved to any destination other than the destination specified on the permit;

(3) The regulated organism is moved in a container that meets the requirements of § 335.8;

(4) The container in which the regulated organism is being moved remains unopened until its arrival at the destination specified on the permit;

(5) The regulated organism is not accompanied by any other organism or article, except as specified on the permit;

(6) The outside of the container in which the regulated organism is being moved identifies the regulated organism, the person to whom the permit was issued, the destination of the regulated organism, the return address of the sender of the regulated organism, and the number of the permit authorizing the interstate movement; and

(7) The person to whom the permit has been issued agrees to notify the Administrator of:

(i) The accidental or unauthorized release into the environment of the regulated organism, immediately after the accidental or unauthorized release into the environment occurs; and

(ii) Any characteristics of the regulated organism that are substantially different from those listed in the application for a permit, no later than 5 days after identifying the characteristics;

(8) The person to whom the permit has been issued agrees to present the regulated organism or any material accompanying the regulated organism to the Administrator for destruction, disposal, or the remedial measures the Administrator determines necessary to prevent the spread of plant pests, and to allow the Administrator to destroy, dispose of, or apply remedial measures to the regulated organism or any material accompanying the regulated organism if the Administrator determines that such action is necessary to prevent the spread of plant pests; and

(9) The regulated organism is moved interstate in accordance with any other conditions specified on the permit.

(c) *Release into the environment.* A regulated organism may be released into the environment only if:

(1) The release of the regulated organism into the environment is authorized by a permit issued in accordance with § 335.4;

(2) The person to whom the permit has been issued agrees to notify the Administrator of:

(i) The accidental or unauthorized release into the environment of the regulated organism, immediately after the accidental or unauthorized release into the environment occurs; and

(ii) Any characteristics of the regulated organism that are substantially different from those listed in the application for a permit, no later than 5 days after identifying the characteristics;

(3) The person to whom the permit has been issued agrees to present the regulated organism or any material accompanying the regulated organism to the Administrator for destruction, disposal, or the remedial measures the Administrator determines necessary to prevent the spread of plant pests, and to allow the Administrator to destroy, dispose of, or apply remedial measures to the regulated organism or any material accompanying the regulated organism if the Administrator determines that such action is necessary to prevent the spread of plant pests;

(4) Specimens of the regulated organism have been submitted to, and accepted into, the collections of at least three universities, museums, scientific societies, or other organizations that maintain collections of organisms, and the identification numbers assigned to the specimens have been provided to APHIS; and

(5) The regulated organism is released into the environment in accordance with the conditions specified on the permit.

§ 335.7 Facilities for the containment of regulated organisms.

(a) The Administrator will approve the use of a facility for the containment of a regulated organism only if:

(1) The facility's physical structure possesses adequate water, air, and waste handling systems, as well as adequate entryways, windows, and facility structure to contain the regulated organism and prevent the unauthorized entry of organisms and people;

(2) The facility has procedural safeguards and is operated in a manner that will prevent the escape of a regulated organism and will prevent the unauthorized entry of organisms and people;

(3) The facility has a means of inactivating or sterilizing the regulated organism and any host material, containers, or other material used for the regulated organism;

(4) The facility and its operation meet any other conditions the Administrator deems necessary to prevent the escape of a regulated organism and will prevent the unauthorized entry of organisms and people;

(5) During the time that a regulated organism is held in the facility, the operator of the facility maintains records that identify the regulated organism, the person from whom the regulated organism was received, the date the regulated organism was received at the facility, and the disposition of the regulated organism; and

(6) During normal business hours, an APHIS inspector is allowed to inspect and copy the records required by paragraph (a)(5) of this section.

(b) [Reserved]

§ 335.8 Container requirements for the movement of regulated organisms.

(a) *General requirements.* A regulated organism shall not be imported or moved interstate unless the regulated organism and any material accompanying the regulated organism are enclosed in a container that complies with paragraph (b) of this section, unless a variance has been granted in accordance with paragraph (c) of this section.

(b) *Container requirements.* (1) *Plants and plant parts.* All plants or plant parts, except seeds and cells, must be enclosed in a sealed plastic bag of at least 0.1270 mm (5 mil) thickness or in an equivalent leakproof container, and then enclosed in a sturdy, sealed, outer container constructed of corrugated fiberboard, corrugated cardboard, wood, or other material of equivalent strength.

(2) *Seeds.* All seeds must be enclosed in a sealed plastic bag of at least 0.1270 mm (5 mil) thickness or in an equivalent leakproof container. The sealed plastic bag or equivalent leakproof container must then be enclosed within a second sealed plastic bag of at least 0.1270 mm (5 mil) thickness or in an equivalent leakproof container. Each plastic bag or equivalent leakproof container must be independently capable of preventing the seeds from escaping the container. Each set of containers must be enclosed in a sturdy outer container constructed of corrugated fiberboard, corrugated cardboard, wood, or other material of equivalent strength.

(3) *Microorganisms.* All microorganisms, such as fungi, bacteria, nematodes, or cells, must be enclosed in a container as specified in paragraph (b)(3)(i) or (b)(3)(ii) of this section:

(i) *Volume not exceeding 50 mL.* Microorganisms not exceeding 50 mL in volume must be enclosed in a durable, watertight primary container, which must be enclosed in a second durable, watertight container (secondary container). Several primary containers may be enclosed in a single secondary container if the total volume of all the primary containers enclosed in a single secondary container does not exceed 50 mL. The space at the top, bottom, and sides between the primary and secondary containers must contain sufficient nonparticulate absorbent material (e.g., paper towel) to absorb the entire contents of the primary container(s). The secondary container must then be enclosed in an outer container constructed of corrugated fiberboard, corrugated cardboard, wood, or other material of equivalent strength.

(ii) *Volume greater than 50 mL.* Microorganisms that exceed a volume of 50 mL must comply with requirements in paragraph (b)(3)(i) of this section. In addition, a shock-absorbing material, in volume at least equal to that of the absorbent material between the primary and secondary containers, must be placed at the top, bottom, and sides between the secondary container and the outer container. Single primary containers may not contain more than 1,000 mL of material. However, two or more primary containers whose combined volumes do not exceed 1,000 mL may be enclosed in a single secondary container. The maximum

amount of microorganisms that may be enclosed within a single outer container shall not exceed 4,000 mL.

(iii) *Dry ice.* If dry ice is used as a refrigerant, it must be placed between the secondary container and the outer container. The shock-absorbing material must be placed so that the secondary container does not become loose inside the outer container as the dry ice sublimates.

(4) *Arthropods.* Insects, mites, or other arthropods must be enclosed in a container as specified in this paragraph or in paragraph (b)(3) of this section. Arthropods (any life stage) must be enclosed in a primary container (insulated vacuum container, metal, or plastic) and the container must be sealed to prevent escape of the arthropods. The primary container must be enclosed in a secondary container of crushproof styrofoam or other material of equivalent strength; one or more rigid ice packs may also be enclosed in the secondary container; and sufficient packing material must be added around the primary container to prevent movement of the primary container within the secondary container. The secondary container must be enclosed in an outer container constructed of corrugated fiberboard, corrugated cardboard, wood, or other material of equivalent strength.

(5) *Other organisms.* Any organism not covered in paragraph (b)(1), (b)(2), or (b)(4) of this section that does not require continuous access to atmospheric oxygen must be enclosed in a container as specified in paragraph (b)(3) or (b)(4) of this section. Any organism that is not a plant and that requires continuous access to atmospheric oxygen must be enclosed in a primary container constructed with a sturdy, crush-proof frame of wood, metal, or other material of equivalent strength, surrounded by mesh or netting of a strength and mesh size sufficient to prevent the escape of the smallest organism in the container, with the edges and seams of the mesh or netting sealed to prevent the escape of organisms. Each primary container must be enclosed in a larger secondary container constructed of wood, metal, or other material of equivalent strength. The primary and secondary containers must be enclosed in an outer container constructed of corrugated fiberboard, corrugated cardboard, wood, or other material of equivalent strength, which outer container may have air holes or spaces in the sides and/or ends of the container, provided that the outer container must retain sufficient strength to prevent crushing of the primary and secondary containers.

(c) *Request for a variance from container requirements.* If the person applying for a permit for the introduction of a regulated organism believes that the container requirements in paragraph (b) of this section are inappropriate for the importation or interstate movement of a regulated organism due to unique circumstances (such as the nature, volume, or life stage of the regulated organism), that person may request a variance from the container requirements in paragraph (b) of this section when applying for a permit. The request for a variance under this section must consist of a written statement describing why the applicable container requirements in paragraph (b) of this section are inappropriate for the regulated organism that the person proposes to move, and what container requirements the person would use in lieu of the applicable container requirements of paragraph (b) of this section. Prior to the issuance of a permit, APHIS will advise the person as to the disposition of his or her request for a variance from the container requirements in paragraph (b) of this section. If APHIS has granted the variance request, a permit will be issued if APHIS had determined from its review of the permit application that the regulated organism can be introduced without risk of plant pest dissemination. Any person who has been denied a variance from the container requirements in paragraph (b) of this section may appeal the decision in writing to the Administrator within 10 days after receiving the written notification of the denial. The appeal must state all of the facts and reasons upon which the person relies to show that the variance was wrongfully denied. The Administrator will grant or deny the appeal, in writing, stating the reasons for the decision as promptly as circumstances allow. If there is a conflict as to any material fact and the person denied a variance requests a hearing, a hearing will be held to resolve the conflict. Rules of practice concerning the hearing will be adopted by the Administrator. No permit will be issued until such time as the appeal is resolved and the applicant has agreed to abide by APHIS' decision.

§ 335.9 Costs and charges.

Unless a user fee is payable under § 354.3 of this chapter, the services of an APHIS inspector during regularly assigned hours of duty and at the usual places of duty will be furnished without cost. The U.S. Department of Agriculture's provisions relating to overtime charges for an APHIS inspector's services are set forth in part 354 of this chapter. The U.S. Department of Agriculture will not be responsible for any costs or charges incident to inspections or compliance with this part, other than for the services of the APHIS inspector.

Done in Washington, DC, this 23rd day of January 1995.

Lonnie J. King,

Acting Administrator, Animal and Plant Health Inspection Service.

[FR Doc. 95–1984 Filed 1–25–95; 8:45 am]

BILLING CODE 3410–34–P

Reader Aids

Federal Register

Vol. 60, No. 17

Thursday, January 26, 1995

INFORMATION AND ASSISTANCE

Federal Register

Index, finding aids & general information	**202–523–5227**
Public inspection announcement line	**523–5215**
Corrections to published documents	**523–5237**
Document drafting information	**523–3187**
Machine readable documents	**523–3447**

Code of Federal Regulations

Index, finding aids & general information	**523–5227**
Printing schedules	**523–3419**

Laws

Public Laws Update Service (numbers, dates, etc.)	**523–6641**
Additional Information	**523–5230**

Presidential Documents

Executive orders and proclamations	**523–5230**
Public Papers of the Presidents	**523–5230**
Weekly Compliation of Presidential Documents	**523–5230**

The United States Government Manual

General Information	**523–5230**

Other Services

Data base and machine readable specifications	**523–3447**
Guide to Record Retention Requirements	**523–3187**
Legal staff	**523–4534**
Privacy Act Compilation	**523–3187**
Public Laws Update Service (PLUS)	**523–6641**
TDD for the hearing impaired	**523–5229**

ELECTRONIC BULLETIN BOARD

Free **Electronic Bulletin Board** service for Public Law numbers, Federal Register finding aids, and list of documents on public inspection. **202–275–0920**

FAX-ON-DEMAND

You may access our Fax-On-Demand service. You only need a fax machine and there is no charge for the service except for long distance telephone charges the user may incur. The list of documents on public inspection and the daily Federal Register's table of contents are available using this service. The document numbers are 7050-Public Inspection list and 7051-Table of Contents list. The public inspection list will be updated immediately for documents filed on an emergency basis.

NOTE: YOU WILL ONLY GET A LISTING OF DOCUMENTS ON FILE AND NOT THE ACTUAL DOCUMENT. Documents on public inspection may be viewed and copied in our office located at 800 North Capitol Street, N.W., Suite 700. The Fax-On-Demand telephone number is: **301–713–6905**

FEDERAL REGISTER PAGES AND DATES, JANUARY

1–318 3
319–1706 4
1707–1988 5
1989–2320 6
2321–2492 9
2493–2670 10
2671–2872 11
2873–3054 12
3055–3334 13
3335–3532 17
3533–3724 18
3725–4068 19
4069–4370 20
4371–4526 23
4527–4830 24
4831–5086 25
5087–5308 26

CFR PARTS AFFECTED DURING JANUARY

At the end of each month, the Office of the Federal Register publishes separately a List of CFR Sections Affected (LSA), which lists parts and sections affected by documents published since the revision date of each title.

3 CFR

Proclamations:
5759 (See Proc. 6763) 1007
6455 (See Proc. 6763) 1007
6641 (See Proc. 6763) 1007
6726 (See Proc. 6763) 1007
6763 1007
6764 3053
6765 3333
6766 4067

Executive Orders:
12640 (Amended by EO 12945) 4527
12826 (Superseded by 12944) 309
12886 (Superseded by 12944) 309
12944 309
12945 4527
12946 4829
12947 5079

Administrative Orders:
Memorandums:
January 4, 1995 3335
Presidential Determinations:
No. 95–11 of December 30, 1994 2671
No. 95–12 of December 31, 1994 2673
No. 95–13 of December 31, 1994 2675

5 CFR

211 3055
230 3055
300 3055
301 3055
307 3055
315 3948
316 3055
330 3055
333 3055
339 3055
340 3055
351 ..... 2677, 3055
353 3055
532 319
550 3303
581 5044
630 ..... 3032, 5252
831 3337
842 3337
930 3055

Proposed Rules:
300 2546
551 2549

7 CFR

7 1989
52 3533
58 4824
201 2493
272 1707
273 1707
301 ..... 2321, 5087
319 ..... 3067, 4529
400 1996
402 2000
782 5087
925 3725
929 1
932 4531
966 2
967 2873
989 4532
1005 319
1032 320
1434 321
1421 1709
1425 2680
1427 1709
1710 3726
1712 3726
1714 3726
1717 3726
1719 3726
1755 ..... 1710, 1711, 5096
1773 2874
1785 3726
1944 4069

Proposed Rules:
53 3982
54 3982
75 379
273 2703
274 2703
335 5289
400 3106
723 4871
1007 65
1032 65
1040 4571
1050 379
1093 65
1094 65
1096 65
1099 65
1108 65
1280 380
1405 4571
1413 4571
1421 381
1494 3564
1755 ..... 1758, 1759
1948 3566
1951 3566

8 CFR

Proposed Rules:
286 3107

9 CFR

78 ....2875, 4371
91 ....4534, 4831
92 ....4372, 5127
97 2875
112 2876
317 174
381 174

Proposed Rules:
1 4383
3 4383
381 3454

10 CFR

Ch. I 4071
32 ....322, 3735

Proposed Rules:
20 4872
35 4872
50 3579
52 4877
430 4348
440 4480

11 CFR

1 4072

Proposed Rules:
110 4114
9003 ....3700, 4114
9004 ....3700, 4114
9006 ....3700, 4114
9007 ....3700, 4114
9033 ....3700, 4114
9034 ....3700, 4114
9037 ....3700, 4114
9038 ....3700, 4114

12 CFR

219 231
230 5128
261a 3340
607 325
612 325
614 ....325, 2683
615 325
618 2683
620 325
630 2493

Proposed Rules:
230 5142
614 2552
615 2552
618 2552

13 CFR

108 4073
122 4373

Proposed Rules:
121 4389
122 4574

14 CFR

1 5074
11 5074
25 325
39 ....3, 327, 329, 330, 332, 336, 1712, 2323, 2493, 2495, 2877, 3737, 3739, 4074, 4076
71 ....338, 2496, 3534, 3535, 3536, 3537, 3741, 4078, 4079, 4946
73 ....3742, 3743
95 4373
97 ....2009, 4080
121 ....2497, 2687, 3303, 5074
129 2497
135 2497

Proposed Rules:
35 ....4114, 4116
39 ....66, 382, 384, 386, 388, 389, 393, 2033, 2036, 2041, 2555, 2909, 3358, 3579, 3581, 3583, 3585, 3587, 3588, 3590, 3592, 4117, 4119
61 395
67 395
71 ....396, 2043, 2044, 2045, 2047, 3108, 3109, 3593, 3595, 3596, 3777, 4131
73 2048
91 2557
257 3359
258 ....3596, 3778

15 CFR

291 4081

16 CFR

Proposed Rules:
1700 ....2716, 4536

17 CFR

200 5
249 3078

Proposed Rules:
249 4040
404 4576
405 4576

18 CFR

2 ....339, 4831
34 4831
35 4831
41 4831
131 4831
141 1716
154 ....2011, 3111
157 2011
158 3141
201 3141
250 3141
260 3141
270 2011
271 2011
272 2011
273 2011
274 2011
275 2011
284 ....1716, 3141
292 4831
294 4831
347 356
348 358
375 1716
382 4831
385 ....1716, 4831
1312 5256

Proposed Rules:
284 3783

19 CFR

206 6
207 18

Proposed Rules:
210 3785

20 CFR

416 360
655 ....3950, 4028

Proposed Rules:
404 3787
422 3787
617 3472

21 CFR

5 2014
74 5131
201 5131
211 4087
520 ....362, 3079
522 ....362, 4375
558 3079
900 3451

Proposed Rules:
Ch. I 5152
310 4132
600 2351
601 2351
606 2351
607 2351
610 2351
640 2351
660 2351
892 3168

22 CFR

226 3743

Proposed Rules:
213 2911

23 CFR

655 363

24 CFR

91 ....1878, 4861
92 1878
261 5280
570 ....1878, 1922
574 1878
576 1878
597 ....2880, 3034
791 3344
813 2658
885 2658
907 4344
968 1878
970 3706
3500 2642

Proposed Rules:
Ch. IX 303
203 4391

25 CFR

Proposed Rules:
151 1956

26 CFR

1 ....23, 2049, 2497, 3345
301 33
602 2497

Proposed Rules:
1 ....397, 406, 2049, 2352, 2557, 2717
53 82
301 83

27 CFR

Proposed Rules:
4 ....411, 3171
5 ....411, 3171
7 ....411, 3171
24 3598

28 CFR

16 38
36 3080
540 240
545 240

Proposed Rules:
90 ....3303, 4393
93 5152

29 CFR

506 3950
507 4028
825 ....2180, 2282
1425 2509
1926 5131
2610 3080
2619 3082
2622 3080
2644 3084
2676 3082

Proposed Rules:
1910 4132
1915 4132
1926 ....4132, 4134

30 CFR

218 3085
773 4662
918 4542
936 2512
944 2520

Proposed Rules:
56 1866
57 1866
254 3177
773 4393
934 3790
935 3184
944 4581

31 CFR

103 ....220, 234
209 416
306 4376
344 4502
357 4376

32 CFR

23 4544
43a 1720
229 5256
323 3087
112 1720
113 1720
536 1735
537 1735
706 3345
989 4545

Proposed Rules:
169a 417

33 CFR

117 ....4377, 4560
161 4377
165 4380
241 5133

Proposed Rules:
110 2364
117 ....2562, 2687, 3791, 3793
156 ....1958, 3185
334 ....4134, 4582

34 CFR

74 365

80 365
99 3464
645 4748
Proposed Rules:
200 85
201 ....85, 2816
203 85
212 85

36 CFR

296 5256
Proposed Rules:
7 4394
68 3599
800 86

37 CFR

Proposed Rules:
1 3700
3 3700
10 4395
201 ....2365, 3948

38 CFR

21 4561
3 2522

40 CFR

9 4948
35 ....366, 2880
51 ....1735, 4712
52 ....38, 40, 41, 372, 375, 1738, 2014, 2016, 2018, 2022, 2025, 2026, 2066, 2067, 2367, 2523, 2524, 2688, 2690, 2881, 2885, 3346, 3352, 3538, 3544, 3760, 4562, 4712, 5134, 5136
60 2369
63 4948
70 ....1741, 2527, 3766, 4563
80 ....2693, 2696
81 ....41, 2026, 2885, 3349, 3352, 3771
82 ....3303, 3318, 4010
85 4712
131 4664
180 ....378, 3546, 4091, 4093, 4095, 4097, 4861, 4862
186 4097
192 2854
228 2699
260 3089
261 1744
268 242
271 ....2534, 2699, 3095, 4380
300 4568
799 ....4514, 4516, 5138
Proposed Rules:
Ch. I 418
2 4877
52 ....86, 87, 88, 418, 2066, 2067, 2563, 2565, 2568, 2717, 2718, 2912, 3361, 3602, 3794, 5155
55 3603
57 4877
70 ....2569, 2570, 2917, 4583
81 ....88, 2719, 3366
82 3992
85 4877
86 4877
91 4878
122 4877
123 4877
145 4877
152 3796
156 2848
170 ....2820, 2826, 2830, 2842
174 3796
180 ....89, 2921, 3611, 3796, 3797, 5155
185 3607
228 3186
230 419
233 4877
260 4877
270 4877
271 4877
281 ....419, 4586, 4877
300 ....422, 3189
350 4877
403 4877
704 4877
707 4877
710 4877
712 4877
716 4877
717 4877
720 4877
723 4877
750 4877
790 4877

41 CFR

60–250 1986
101–37 3547
114 3554
201–3 2029
201–9 2029
201–18 2029
201–20 2029
201–21 2029
201–23 2029
201–39 2029
Ch. 301 4477
302–11 2536

42 CFR

400 2325
405 2325
410 ....46, 2325
414 46
484 2325
485 2325
486 2325
498 2325
Proposed Rules:
51 4946
63a 4742

43 CFR

7 5256
Public Land Orders:
7108 2030
7109 2539
7110 3098
7111 3356
7112 3555
Proposed Rules:
39 4135

44 CFR

65 4099
67 4105
Proposed Rules:
67 4135

45 CFR

1607 2330
Proposed Rules:
1604 3367
1611 3798

46 CFR

10 4522
12 4522
16 4522
25 2482
160 2482
Proposed Rules:
515 2923
550 2923
580 2923
581 2923

47 CFR

15 3303
22 3555
61 ....4107, 4569
69 4107
73 3557
76 ....3099, 4863
90 3773
Proposed Rules:
Ch. I 3807
1 2722
2 2722
21 ....2722, 2924
61 2068
69 2068
73 ....90, 91, 2726, 3191, 3613, 5157, 5158, 5159
74 2924
80 2726
94 2722
101 2722

48 CFR

206 2888
210 4878
215 4878
231 ....1747, 2330
235 4569
237 2888
242 1747
252 4878
Proposed Rules:
Ch. 1 ....2302, 2472, 3492
31 3314
32 3988
33 2630
39 2630
42 2630
45 2370
50 2630
52 ....2370, 2630
219 4144
231 2924
252 4144
912 4397
923 2727
952 4397
970 ....2727, 4397
5452 4144
6101 3948

49 CFR

1 2889
382 2030
391 54
555 1749
571 ....1750, 2539, 2892, 3774
572 2896
1002 ....2543, 4477
1011 2543
1130 2543
Proposed Rules:
40 3371
171 4879
172 4879
173 4879
174 4879
175 4879
176 4879
177 4879
178 4879
179 4879
180 4879
214 1761
229 3375
231 3375
232 3375
390 91
391 91
392 91
396 91
544 3830
571 3303
Ch. X 2069
1023 4397

50 CFR

17 ....56, 2899, 3557, 5264
20 ....61, 2177
32 ....5066, 5276
222 ....3775, 3948
227 3948
611 2331
625 ....1757, 2905
630 2032
642 4866
646 3562
651 3102
663 2331
672 2905
675 ....2905, 4110, 4866
677 ....2344, 4866
Proposed Rules:
17 ....69, 425, 2070, 2638, 3613, 5159
18 70
23 73
222 3032
227 2070
301 2925
Ch. VI 3832
611 ....4477, 4662
655 5162
672 4477
675 4662
676 ....2935, 4477, 4662
678 2071