1–6–95
Vol. 60 No. 4
Pages 1989–2320

federal register

Friday
January 6, 1995

Briefings on How To Use the Federal Register
For information on briefings in Washington, DC, see announcement on the inside cover of this issue.

FEDERAL REGISTER Published daily, Monday through Friday, (not published on Saturdays, Sundays, or on official holidays), by the Office of the Federal Register, National Archives and Records Administration, Washington, DC 20408, under the Federal Register Act (49 Stat. 500, as amended; 44 U.S.C. Ch. 15) and the regulations of the Administrative Committee of the Federal Register (1 CFR Ch. I). Distribution is made only by the Superintendent of Documents, U.S. Government Printing Office, Washington, DC 20402.

The **Federal Register** provides a uniform system for making available to the public regulations and legal notices issued by Federal agencies. These include Presidential proclamations and Executive Orders and Federal agency documents having general applicability and legal effect, documents required to be published by act of Congress and other Federal agency documents of public interest. Documents are on file for public inspection in the Office of the Federal Register the day before they are published, unless earlier filing is requested by the issuing agency.

The seal of the National Archives and Records Administration authenticates this issue of the **Federal Register** as the official serial publication established under the Federal Register Act. 44 U.S.C. 1507 provides that the contents of the **Federal Register** shall be judicially noticed.

The **Federal Register** is published in paper, 24x microfiche and as an online database through *GPO Access*, a service of the U.S. Government Printing Office. The online database is updated by 6 a.m. each day the **Federal Register** is published. The database includes both text and graphics from Volume 59, Number 1 (January 2, 1994) forward. It is available on a Wide Area Information Server (WAIS) through the Internet and via asynchronous dial-in. The annual subscription fee for a single workstation is $375. Six-month subscriptions are available for $200 and one month of access can be purchased for $35. Discounts are available for multiple-workstation subscriptions. To subscribe, Internet users should telnet to swais.access.gpo.gov and login as newuser (all lower case); no password is required. Dial-in users should use communications software and modem to call (202) 512–1661 and login as swais (all lower case); no password is required; at the second login prompt, login as newuser (all lower case); no password is required. Follow the instructions on the screen to register for a subscription for the **Federal Register** Online via *GPO Access.* For assistance, contact the *GPO Access* User Support Team by sending Internet e-mail to help@eids05.eids.gpo.gov, or a fax to (202) 512–1262, or by calling (202) 512–1530 between 7 a.m. and 5 p.m. Eastern time, Monday through Friday, except Federal holidays.

The annual subscription price for the **Federal Register** paper edition is $494, or $544 for a combined **Federal Register**, Federal Register Index and List of CFR Sections Affected (LSA) subscription; the microfiche edition of the **Federal Register** including the Federal Register Index and LSA is $433. Six month subscriptions are available for one-half the annual rate. The charge for individual copies in paper form is $8.00 for each issue, or $8.00 for each group of pages as actually bound; or $1.50 for each issue in microfiche form. All prices include regular domestic postage and handling. International customers please add 25% for foreign handling. Remit check or money order, made payable to the Superintendent of Documents, or charge to your GPO Deposit Account, VISA or MasterCard. Mail to: New Orders, Superintendent of Documents, P.O. Box 371954, Pittsburgh, PA 15250–7954.

There are no restrictions on the republication of material appearing in the **Federal Register.**

How To Cite This Publication: Use the volume number and the page number. Example: 60 FR 12345.

SUBSCRIPTIONS AND COPIES

PUBLIC

Subscriptions:

Paper or fiche	**202–512–1800**
Assistance with public subscriptions	**512–1806**

Online:

Telnet swais.access.gpo.gov, login as newuser <enter>, no password <enter>; or use a modem to call (202) 512–1661, login as swais, no password <enter>, at the second login as newuser <enter>, no password <enter>.

Assistance with online subscriptions	**202–512–1530**

Single copies/back copies:

Paper or fiche	**512–1800**
Assistance with public single copies	**512–1803**

FEDERAL AGENCIES

Subscriptions:

Paper or fiche	**523–5243**
Assistance with Federal agency subscriptions	**523–5243**

For other telephone numbers, see the Reader Aids section at the end of this issue.

THE FEDERAL REGISTER

WHAT IT IS AND HOW TO USE IT

FOR: Any person who uses the Federal Register and Code of Federal Regulations.

WHO: The Office of the Federal Register.

WHAT: Free public briefings (approximately 3 hours) to present:

1. The regulatory process, with a focus on the Federal Register system and the public's role in the development of regulations.
2. The relationship between the Federal Register and Code of Federal Regulations.
3. The important elements of typical Federal Register documents.
4. An introduction to the finding aids of the FR/CFR system.

WHY: To provide the public with access to information necessary to research Federal agency regulations which directly affect them. There will be no discussion of specific agency regulations.

WASHINGTON, DC

(TWO BRIEFINGS)

WHEN:	January 25 at 9:00 am and 1:30 pm
WHERE:	Office of the Federal Register Conference Room, 800 North Capitol Street NW, Washington, DC (3 blocks north of Union Station Metro)
RESERVATIONS:	202–523–4538

Printed on recycled paper containing 100% post consumer waste

Contents

Federal Register

Vol. 60, No. 4

Friday, January 6, 1995

Agriculture Department
See Consolidated Farm Service Agency
See Federal Crop Insurance Corporation
See Forest Service
RULES
Import quotas and fees:
Dairy tariff-rate import quota licensing, 1989–1996
NOTICES
Import quotas and fees:
Meat import limitations; quarterly estimates, 2074

Blind or Severely Disabled, Committee for Purchase From People Who Are
See Committee for Purchase From People Who Are Blind or Severely Disabled

Children and Families Administration
NOTICES
Grants and cooperative agreements; availability, etc.:
Discretionary programs, 2103–2140

Commerce Department
See International Trade Administration
See National Oceanic and Atmospheric Administration

Committee for Purchase From People Who Are Blind or Severely Disabled
NOTICES
Procurement list; additions and deletions, 2082–2083

Committee for the Implementation of Textile Agreements
NOTICES
Textile consultation; review of trade:
Thailand, 2081–2082

Commodity Futures Trading Commission
NOTICES
Meetings; Sunshine Act, 2175

Consolidated Farm Service Agency
NOTICES
Meetings:
National Conservation Review Group, 2074

Defense Department
PROPOSED RULES
Federal Acquisition Regulation (FAR):
Agency information collection activities under OMB review, 2089
Truth in negotiations, 2302
NOTICES
Agency information collection activities under OMB review, 2083
Meetings:
Armed Forces Roles and Missions Commission, 2083
Travel per diem rates, civilian personnel; changes, 2084–2089

Defense Nuclear Facilities Safety Board
NOTICES
Recommendations:
DOE safety rules, orders, and other requirements; integration, 2089–2091

Employment Standards Administration
See Wage and Hour Division
NOTICES
Minimum wages for Federal and federally-assisted construction; general wage determination decisions, 2157–2158

Energy Department
See Federal Energy Regulatory Commission
NOTICES
Environmental statements; availability, etc.:
Fernald, OH—
Operable Unit 4 Environmental Management Project, 2092–2094
Grants and cooperative agreements; availability, etc.:
Historically black colleges and universities, 2091–2092
Meetings:
Human Radiation Experiments Advisory Committee, 2095

Environmental Protection Agency
RULES
Air quality implementation plans; approval and promulgation; various States; air quality planning purposes; designation of areas:
Alabama, 2026–2029
Air quality implementation plans; approval and promulgation; various States:
California, 2025–2026
Louisiana, 2014–2016
Maryland, 2018–2022
Massachusetts, 2016–2018
New York, 2022–2025
PROPOSED RULES
Air quality implementation plans; approval and promulgation; various States:
Alabama, 2067
Maryland, 2067–2068
Massachusetts, 2067
New York, 2066
NOTICES
Environmental statements; availability, etc.:
Agency statements—
Weekly receipts, 2102–2103

Federal Aviation Administration
RULES
Airworthiness directives:
Boeing, 2005–2007
Class E airspace, 2007–2009
Standard instrument approach procedures, 2009–2011
PROPOSED RULES
Airworthiness directives:
Boeing, 2033–2041
McDonnell Douglas, 2041–2043
Class C and Class E airspace, 2047–2748
Class D airspace, 2043–2044
Class E airspace, 2044–2048
Restricted areas, 2048–2049
NOTICES
Passenger facility charges; applications, etc.:
Yakima Air Terminal, WA, 2172–2173

Federal Communications Commission
PROPOSED RULES
Common carrier services:
Transport rate structure and pricing; split billing, 2068–2069
NOTICES
Meetings:
Network Reliability Council, 2103

Federal Crop Insurance Corporation
RULES
Crop insurance regulations:
1994 Federal Crop Insurance Reform Act; implementation; 1995 and subsequent crop years, 1996–2000
Catastrophic risk protection endorsement, 2000–2005

Federal Energy Regulatory Commission
RULES
Natural gas companies (Natural Gas Act) and Natural Gas Policy Act:
Natural gas production sales; outdated regulations removed, 2011–2014
NOTICES
Electric rate and corporate regulation filings:
PECO Energy Co. et al., 2095–2097
Hydroelectric applications, 2098–2101
Natural gas certificate filings:
Columbia Gas Transmission Corp. et al., 2101–2102
Applications, hearings, determinations, etc.:
Appalachian Power Co., 2097
Florida Gas Transmission Co., 2095
Illinois Power Co., 2097
Northeast Utilities Service Co., 2097–2098
Pennsylvania Power & Light Co., 2098

Federal Highway Administration
RULES
Motor carrier safety standards:
Omnibus Transportation Employee Testing Act of 1991—
Controlled substances and alcohol use and testing, 2030–2032

Federal Maritime Commission
NOTICES
Casualty and nonperformance certificates:
Crystal Cruises, Inc., et al., 2103

Federal Reserve System
NOTICES
Meetings; Sunshine, 2174

Financial Management Service
See Fiscal Service

Fiscal Service
NOTICES
Surety companies acceptable on Federal bonds:
Chatham Reinsurance Corp., 2173

Fish and Wildlife Service
RULES
Migratory bird hunting:
Bismuth-tin shot as nontoxic for waterfowl and coot hunting during 1994-95 hunting season; conditional approval
Correction, 2177
PROPOSED RULES
Endangered and threatened species:
Arkansas River shiner, 2070
NOTICES
Endangered and threatened species:
Recovery plans—
Sacramento-San Joaquin Delta native fishes, 2155–2156
Environmental statements; availability, etc.:
Incidental take permits—
Cloisters, Brevard County, FL; Florida scrub jay and Eastern indigo snake, 2156

Food and Drug Administration
RULES
Organization, functions, and authority delegations:
Center for Devices and Radiological Health, 2014
NOTICES
Harmonization International Conference; guidelines availability:
Regulatory requirements and guidelines; development and standards use policy; correction, 2177

Forest Service
NOTICES
Environmental statements; availability, etc.:
Tongass National Forest, AK, 2074–2076

General Services Administration
RULES
Federal Information Resources Management Regulation:
Miscellaneous amendments; correction, 2029–2030
PROPOSED RULES
Federal Acquisition Regulation (FAR):
Agency information collection activities under OMB review, 2282
Truth in negotiations, 2302

Geological Survey
NOTICES
Grants and cooperative agreements; availability, etc.:
National Mapping Division; data program for land processes research, 2157

Health and Human Services Department
See Children and Families Administration
See Food and Drug Administration
See Indian Health Service
See Public Health Service
See Social Security Administration
See Substance Abuse and Mental Health Services Administration

Health Resources and Services Administration
See Public Health Service

Housing and Urban Development Department
NOTICES
Grants and cooperative agreements; availability, etc.:
Facilities to assist the homeless—
Excess and surplus Federal property, 2153–2155

Indian Health Service
NOTICES
Grant and cooperative agreement awards:
Indian health scholarship program; recipients list, 2133–2140

Interior Department
See Fish and Wildlife Service

See Geological Survey
See Land Management Bureau

Internal Revenue Service
PROPOSED RULES
Income taxes:
Foreign taxes deemed paid; computation, 2049–2066

International Trade Administration
NOTICES
Antidumping:
Brass sheet and strip from—
Germany, 2076–2078
Carbon steel butt-weld pipe fittings from—
Thailand; correction, 2078
Compact ductile iron waterworks fittings and glands from—
China, 2078–2080
Glycine from—
China, 2080–2081

Interstate Commerce Commission
PROPOSED RULES
Rulemaking petitions:
Interlining restrictions between common and contract motor carriers, 2069–2070
NOTICES
Motor carriers:
Compensated intercorporate hauling operations, 2157

Labor Department
See Employment Standards Administration
See Wage and Hour Division

Land Management Bureau
RULES
Public land orders:
California, 2030

National Aeronautics and Space Administration
PROPOSED RULES
Federal Acquisition Regulation (FAR):
Agency information collection activities under OMB review, 2302
Truth in negotiations, 2282

National Oceanic and Atmospheric Administration
RULES
Fishery conservation and management:
Atlantic swordfish, 2032
PROPOSED RULES
Endangered and threatened species:
Shortnose sturgeon in Kennebec River System, ME, 2070–2071
Fishery conservation and management:
Atlantic shark, 94-32343

National Science Foundation
NOTICES
Meetings:
Bioengineering and Environmental Systems Special Emphasis Panel, 2158–2159
Civil and Mechanical Systems Special Emphasis Panel, 2159
Electrical and Communications Systems Special Emphasis Panel, 2159
International Programs Special Emphasis Panel, 2159
Networking and Communications Research and Infrastructure Special Emphasis Panel, 2159
Physics Special Emphasis Panel, 2159–2160
Research, Evaluation, and Dissemination Special Emphasis Panel, 2160
Undergraduate Education Special Emphasis Panel, 2160

Nuclear Regulatory Commission
NOTICES
Environmental statements; availability, etc.:
Cleveland Electric Illuminating Co. et al., 2162–2164
Applications, hearings, determinations, etc.:
Arizona Public Service Co., 2160–2162

Public Health Service
See Food and Drug Administration
See Indian Health Service
See Substance Abuse and Mental Health Services Administration
NOTICES
Agency information collection activities under OMB review, 2143–2144
Privacy Act:
Systems of records, 2140–2143

Securities and Exchange Commission
NOTICES
Meetings; Sunshine Act, 2175
Self-regulatory organizations; proposed rule changes:
National Association of Securities Dealers, Inc., 2169–2170
New York Stock Exchange, Inc., 2167–2169
Applications, hearings, determinations, etc.:
A.T. Ohio Municipal Money Fund et al., 2166–2167
Ohio National Life Insurance Co. et al., 2164–
Pilgrim Corporate Utilities Fund, 2170–2171

Social Security Administration
NOTICES
Privacy Act:
Systems of records, 2144–2153

State Department
NOTICES
Meetings:
Shipping Coordinating Committee, 2171

Substance Abuse and Mental Health Services Administration
NOTICES
Meetings:
Substance Abuse and Mental Health Services Administration National Advisory Council, 2153

Textile Agreements Implementation Committee
See Committee for the Implementation of Textile Agreements

Thrift Supervision Office
NOTICES
Receiver appointments:
Cornerstone Bank, F.S.B., 2173
Standard Federal Savings, FSA, 2174
Applications, hearings, determinations, etc.:
Marshall Savings Bank, F.S.B., 2173
SJS Federal Savings Bank, 2173–2174

Transportation Department
See Federal Aviation Administration
See Federal Highway Administration

NOTICES
Aviation proceedings:
Agreements filed; weekly receipts, 2172
Certificates of public convenience and necessity and foreign air carrier permits; weekly applications, 2172
International airline code sharing study; comment request, 2171–2173

Treasury Department
See Fiscal Service
See Internal Revenue Service
See Thrift Supervision Office

United States Enrichment Corporation
NOTICES
Meetings; Sunshine Act, 2175–2176

Wage and Hour Division
RULES
Family and Medical Leave Act; implementation, 2180–2279

Separate Parts In This Issue

Part II
Department of Labor, Wage and Hour Division, 2180

Part III
Department of Defense, General Services Administration, and National Aeronautics and Space Administration, 2282

Part IV
Department of Defense, General Services Administration, and National Aeronautics and Space Administration, 2302

Reader Aids
Additional information, including a list of public laws, telephone numbers, and finding aids, appears in the Reader Aids section at the end of this issue.

Electronic Bulletin Board
Free **Electronic Bulletin Board** service for Public Law numbers, **Federal Register** finding aids, and a list of documents on public inspection is available on 202–275–1538 or 275–0920.

CFR PARTS AFFECTED IN THIS ISSUE

A cumulative list of the parts affected this month can be found in the Reader Aids section at the end of this issue.

7 CFR
6.....1989
400.....1996
402.....2000

14 CFR
39.....2005
71 (3 documents) ...2007, 2008, 2009
97.....2009

Proposed Rules:
39 (3 documents) ...2043, 2036, 2041
71 (4 documents) ...2043, 2044, 2045, 2047
73.....2048

18 CFR
154.....2011
157.....2011
270.....2011
271.....2011
272.....2011
273.....2011
274.....2011
275.....2011

21 CFR
5.....2014

26 CFR

Proposed Rules:
1.....2049

29 CFR
825.....2180

40 CFR
52 (6 documents) ...2014, 2016, 2018, 2022, 2025, 2026
81.....2026

Proposed Rules:
52 (4 documents) 2066, 2067

41 CFR
201–3.....2029
201–9.....2029
201–18.....2029
201–20.....2029
201–21.....2029
201–23.....2029
201–39.....2029

43 CFR

Public Land Order
7108.....2030

47 CFR

Proposed Rules:
61.....2068
69.....2068

48 CFR

Proposed Rules:
Ch. I (2 documents).....2282, 2302

49 CFR
382.....2030

Proposed Rules
Ch. X.....2069

50 CFR
20.....2177
630.....2032

Proposed Rules:
17.....2070
227.....2070
678.....2071

Rules and Regulations

Federal Register
Vol. 60, No. 4
Friday, January 6, 1995

This section of the FEDERAL REGISTER contains regulatory documents having general applicability and legal effect, most of which are keyed to and codified in the Code of Federal Regulations, which is published under 50 titles pursuant to 44 U.S.C. 1510.

The Code of Federal Regulations is sold by the Superintendent of Documents. Prices of new books are listed in the first FEDERAL REGISTER issue of each week.

DEPARTMENT OF AGRICULTURE

Office of the Secretary

7 CFR Part 6

Dairy Tariff-Rate Import Quota Licensing

AGENCY: Office of the Secretary, USDA.

ACTION: Interim rule.

SUMMARY: This rule amends Import Regulation 1, Revision 7 which governs the administration of the import licensing system for certain dairy products which will be subject to in-quota tariff rates proclaimed in the Harmonized Tariff Schedule of the United States (HTS), resulting from entry into force of the Uruguay Round Agreement on January 1, 1995. Most of these products were subject to quotas proclaimed under section 22 of the Agricultural Adjustment Act of 1933, as amended (Section 22).

DATES: This interim rule will be effective on January 1, 1995. Comments should be submitted on or before February 21, 1995 to be assured of consideration.

ADDRESSES: Comments should be sent to Richard Warsack, Dairy Import Quota Manager, Import Policies and Programs Division, Room 5531–S, Foreign Agricultural Service, U.S. Department of Agriculture, 14th and Independence Avenue, SW., Washington, DC 20250–1000. All comments received will be available for public inspection in room 5541–S at the above address.

FOR FURTHER INFORMATION CONTACT: Diana Wanamaker, Group Leader, Import Programs Group, Import Policies and Programs Division, Room 5531–S, Foreign Agricultural Service, U.S. Department of Agriculture, 14th and Independence Avenue, SW., Washington, DC 20250, or telephone (202) 720–2916.

SUPPLEMENTARY INFORMATION:

Executive Order 12866

This interim rule is issued in conformance with Executive Order 12866. It has been determined to be significant for the purposes of E.O. 12866 and, therefore, has been reviewed by the Office of Management and Budget (OMB).

Regulatory Flexibility Act

It has been determined that the Regulatory Flexibility Act is not applicable to this interim rule since the Office of the Secretary is not required by 5 U.S.C. 553 or any other provision of law to publish a notice of proposed rulemaking with respect to the subject matter of this rule.

Executive Order 12372

This program is not subject to the provisions of Executive Order 12372, which requires intergovernmental consultation with State and local officials. See notice related to 7 CFR part 3015, subpart V, published at 48 FR 29115 (June 24, 1983).

Environmental Evaluation

It has been determined by an environmental evaluation that this action will not have a significant impact on the quality of the human environment. Therefore, neither an Environmental Assessment nor an Environmental Impact Statement is needed.

Paperwork Reduction Act

This Interim Final Rule amends the existing information collection as approved by the Office of Management and Budget (OMB) pursuant to the Paperwork Reduction Act of 1980 (44 U.S.C. 3501 et. seq.), under OMB control number 0551–0001, expiring June 30, 1997.

Due to the time constraints of implementing the rule immediately, the agency has requested emergency clearance of this addendum from OMB. Comments on the information collection may be sent to the Office of Information and Regulatory Affairs, Office of Management and Budget, Room 10202, NEOB, Washington, DC 20503. Attention: Desk Officer for USDA.

Executive Order 12778

This interim rule has been reviewed under Executive Order 12778. The provisions of this interim rule would have preemptive effect with respect to any state or local laws, regulations, or policies which conflict with such provisions or which otherwise impede their full implementation. The rule would not have retroactive effect.

Background

An Advance Notice of Proposed Rulemaking (the ANPR) was published in the **Federal Register** on June 2, 1994, seeking suggestions and comments on methods for allocating imported dairy products subject to the in-quota tariff rates to be proclaimed in the HTS as a result of the entry into force of the Uruguay Round Agreement. The ANPR also sought suggestions on various other changes intended to update and make more enforceable the provisions of Import Regulation 1, Revision 7, codified at 7 CFR §§ 6.20–6.24 (the Import Regulation). Because of time constraints this rule will deal only with modifications of the existing rule necessary to implement the U.S. Uruguay Round commitments and will become effective January 1, 1995. A proposed rule making further changes as envisaged in the ANPR will be published in the future.

This interim rule issues the Import Regulation under the authority of section 111 of the Uruguay Round Agreements Act and Chapter 4 and General Note 15 of the Harmonized Tariff Schedule of the United States (HTS), and amends that regulation to establish the import licensing system for the quantities of cheese and certain other dairy products subject to in-quota tariff rates in the HTS. These quantities include both the quantities which have been subject to an absolute quota under Section 22 as well as the additional quantities of cheese articles and certain non-cheese articles negotiated under the Uruguay Round of multilateral trade negotiations. Certain Uruguay Round country tariff-rate quotas or increments do not appear in Appendix 3 of this regulation as they will only take effect when those countries implement their respective schedules of concessions. The interim rule also establishes new eligibility requirements and allocation methods for the new quantities of non-cheese items. In addition, it deletes obsolete provisions and updates all the references in the regulation to the HTS

to conform to the tariff schedule which becomes effective on January 1, 1995.

Throughout the regulation, the term ''annual quota'' is replaced by ''annual tariff-rate quota,'' and references to the TSUS are now to the Harmonized Tariff Schedule of the United States, the Harmonized Tariff Schedule, or the HTS.

The definitions in section 6.21 are amended to: (1) replace the term ''annual quota'' with ''annual tariff-rate quota,'' (2) add a definition of ''Appendix 3'' which sets forth the increments in the tariff-rate quota quantities for 1995 for certain cheese and non-cheese articles and the total 1995 tariff-rate quota for butter substitutes to be administered under this regulation, (3) define the term ''Harmonized Tariff Schedule of the United States,'' (4) change the reference to the Licensing Authority, which has moved within the Foreign Agricultural Service agency structure, (5) add the term ''any country'' which will apply to in-quota amounts for which there is no country allocation and to country of origin adjustments provided for in section 6.30, and (6) change all references to the TSUS to read the HTS.

Section 6.23, which establishes exceptions to the requirement for a license to enter certain products, is amended to conform with the exceptions in General Note 15 of the Harmonized Tariff Schedule of the United States.

The eligibility provisions in section 6.25 are changed to: (1) eliminate all one-time provisions establishing eligibility for new historical and non-historical licenses which resulted from the Tokyo Round Agreement, (2) provide that the eligibility requirements for supplementary licenses be applied to Appendix 3 cheese articles and provide eligibility criteria for non-cheese dairy article Appendix 3 supplementary import licenses, and (3) provide for an application period for licenses to import all 1995 Uruguay Round increments in cheese and certain non-cheese dairy articles. The eligibility requirements for the non-cheese articles are significantly more stringent than the existing cheese requirements. This is to ensure that licenses are awarded to import/distribution or manufacturing operations. There is, however, an alternative eligibility requirement for non-cheese items which requires a greater number of shipments spread throughout the year than the standard criteria. The alternative is intended to allow small companies or those seeking less than a container-load to qualify for license.

Section 6.26 is amended to: (1) eliminate all one-time provisions establishing the allocation of new historical licenses which resulted from the Tokyo Round Agreement, (2) update the table of minimum non-historical license sizes to show the HTS number and quantity in kilograms, and (3) apply the allocation methods for supplementary licenses to Appendix 3 cheese articles and establish allocation methods for Appendix 3 non-cheese articles. The minimum and maximum supplementary license sizes for non-cheese articles are being set at higher levels than those which currently apply to cheese articles to reflect current shipping practices. The allocation method for the new amounts of non-cheese articles will be a rank-order lottery, in which applicants are requested to number each license request in a rank order. Once a license is awarded from among the non-cheese articles to an applicant, no other non-cheese license will be awarded to that applicant until all the other applicants have received at least one non-cheese license for which they applied, provided that the licenses for which they applied are not already fully allocated.

Section 6.27 is amended to delete the references to Customs Form 7505 which is no longer in use. Sections 6.28, 6.29, and 6.30 are amended solely to bring them up-to-date and into conformance with the HTS effective as of January 1, 1995, and to provide coverage for Appendix 3 articles where appropriate. Section 6.34 is deleted as it is unnecessary in the body of the rule.

List of Subjects in 7 CFR Part 6

Agricultural commodities, Cheese, Dairy products, Imports, and Reporting and record keeping requirements.

Interim Rule

Accordingly, 7 CFR Part 6, Subpart—Section 22 Import Quotas, §§ 6.20–6.34, and Appendix 1 and Appendix 2 thereto, are amended as follows:

1. The heading for §§ 6.20–6.34 is revised to read as follows: ''Subpart—Tariff-Rate Quotas''.

2. The authority citation for sections 6.20–6.34 and the appendices thereto is revised to read as follows:

Authority: Additional U.S. Notes 6, 7, 12, 14, and 16–25 to Chapter 4 and General Note 15 of the Harmonized Tariff Schedule of the United States (19 U.S.C. 1202), Pub. L. 97–258, 96 Stat. 1051 (31 U.S.C. 9701), and sec. 111, Pub. L. 103–465, 108 Stat. 4819.

3. Section 6.20 is revised to read as follows:

§ 6.20 Determination.

Additional U.S. Notes 6, 7, 12, 14, and 16 through 25 to Chapter 4 of the Harmonized Tariff Schedule of the United States provide that imports of the articles enumerated in those notes require import licenses issued by the U.S. Department of Agriculture. Additional U.S. Notes 16 through 25 also provide that unfilled allocations may be reallocated in accordance with regulations issued by the U.S. Department of Agriculture. General Note 15 provides for certain exceptions that require the approval of the Secretary of Agriculture. These regulations shall apply to all articles subject to tariff-rate quotas, and the exceptions thereto, in accordance with these notes.

4. Section 6.21 is revised to read as follows:

§ 6.21 Definitions.

Affiliate means any person or legal entity which owns or is owned by, in total or in part, directly or indirectly, or controls or is controlled by another person, persons or legal entity. For a corporation, ownership interest will be the controlling criterion. If 5 percent or more equity interest in the aggregate is owned or controlled in a corporation, partnership, estate, or trust by or for a person, a corporation, a partnership, or a beneficiary of an estate or a trust, the interest will be considered as owned or controlled by the person, partnership, corporation, estate or trust. Ownership interest in any person or legal entity may be attributed to another person or entity in accordance with § 6.25(b)(3), thereby causing the person or entity to whom the ownership interest has been attributed to be defined as an ''affiliate'' even though such persons or legal entities have no direct relation with each other.

Annual tariff-rate quota means the quantity of an article which may be entered in a quota year as provided for in Appendix 1, Appendix 2 and Appendix 3 at the in-quota tariff rate.

Any country means those countries or territories listed in Annex A, Schedule C of the Harmonized Tariff Schedule.

Appendix 1 means Appendix 1 to this subpart. Definitions of articles in this appendix are the same as those provided for in the Additional U.S. Notes to Chapter 4 of the Harmonized Tariff Schedule.

Appendix 2 means Appendix 2 to this subpart. Definitions of articles in this appendix are the same as those provided for in the Additional U.S. Notes to Chapter 4 of the Harmonized Tariff Schedule.

Appendix 3 means Appendix 3 to this subpart. Definitions of articles in this

appendix are the same as those provided for in the Additional U.S. Notes to Chapter 4 of the Harmonized Tariff Schedule.

Article means any Harmonized Tariff Schedule article referred to in Appendix 1, Appendix 2, or Appendix 3 of this supart.

Associate means a party connected with one or more parties, formally or informally, directly or indirectly, with the common purpose of obtaining eligibility for additional licenses, one party intending to use, (and benefit economically from such use) directly or indirectly the licenses that the other may acquire. Two or more associates of a third party shall not be deemed to be associates of one another due to such third-party association only.

Authorized agent means an agent as used in 19 CFR 141.31(a) for whom the licensee has filed with the District Director of Customs a limited power of attorney using Customs Form 5291 authorizing such agent to act for, but only in, the licensee's name.

Basic annual allocation refers to historical quota shares only and means the quota share of a licensee for an article before any reduction as authorized under § 6.26(d) has been effected. It will be calculated on the basis of the annual average amount entered by a licensee during a predetermined representative base period.

Cheese or cheese products means those cheeses and cheese products for which standards of identity have been promulgated by the Food and Drug Administration and/or which are encompassed within 21 CFR part 133.

Country of origin and/or *Supplying country* mean the country in which the article subject to the regulation was produced or manufactured as defined under 19 CFR 134.1(b).

Date of entry is the date when the specified Customs entry form is properly executed and deposited, together with estimated duties and any related documents required by law or regulation to be filed with such form at the time of entry, with the appropriate Customs Officer.

Department means the United States Department of Agriculture.

EC means the twelve European Community countries, viz., Belgium, Denmark, the Federal Republic of Germany, France, Greece, Ireland, Italy, Luxembourg, the Netherlands, Portugal, Spain and the United Kingdom, which for the purposes of this regulation shall be deemed as one country of origin.

Eligible applicant means a person applying for a license to enter an article who has established, to the satisfaction of the Licensing Authority, eligibility to enter such article, in accordance with § 6.25.

Enter means to make entry, or withdrawal from warehouse, for consumption by deposit with, and acceptance by, the appropriate Customs officer of the properly executed entry documents, including invoices, bills of lading and payment of estimated duties.

Entire dairy products business means the total assets and operations of the foreign and domestic aspects of a business pertaining to articles subject to the provisions of this regulation.

Entrepreneurial use means the processing or sale of the article entered pursuant to the license as a part of the ordinary conduct of business by a licensee who is managing and assuming the risk of such business. Such term does not include one who is functioning as a mere supplier of license.

Harmonized Tariff Schedule means the Harmonized Tariff Schedule of the United States.

Licensee means any person to whom a license has been issued under the regulation.

Licensing Authority means the Dairy Import Quota Manager, Import Policies and Programs Division, Foreign Agricultural Service, U.S. Department of Agriculture, or any other officer or employee of the Department acting in his or her behalf.

Other countries refers to countries sharing a common tariff-rate quota which are not listed as having separate tariff-rate quota allocations in the Additional U.S. Notes to Chapter 4 of the Harmonized Tariff Schedule and for the purposes of the regulation are deemed as one country of origin.

Person includes any individual, firm, corporation, partnership, association, or other legal entity. It also includes any national government (other than the Government of the United States and any agency thereof).

Postmark means the postage cancellation mark applied by the U.S. Post Office showing the post office and date of mailing. This does not include metered postage affixed by the applicant or any other private entity.

Quota means the articles and quantities of such articles subject to an in-quota rate of duty provided for in the Additional U.S. Notes to Chapter 4 of the Harmonized Tariff Schedule and covered by this regulation.

Quota share means that part of the annual tariff-rate quota of an article listed in Appendix 1, Appendix 2, or Appendix 3 of this subpart for which a person is eligible.

Quota year means the 12–month period beginning on January 1 of any given year.

Regulation means the provisions contained in the Licensing Regulation of this subpart.

United States means the Customs Territory of the United States, which is limited to the United States, the District of Columbia and Puerto Rico.

5. Section 6.22 is amended by revising paragraph (a) to read as follows:

§ 6.22 Prohibitions and restrictions on importers.

(a) No person may enter or cause to be entered any article listed in Appendix 1, Appendix 2, or Appendix 3, except as provided in § 6.23 or as authorized by a license issued pursuant to this regulation.

* * * * *

6. Section 6.23 is revised to read as follows:

§ 6.23 Exceptions.

Licenses are not required for the entry of:

(a) Products imported by or for the account of any agency of the U.S. Government.

(b) Products imported for the personal use of the importer, provided that the net quantity of such product in any one shipment does not exceed five kilograms.

(c) Products, which will not enter the commerce of the United States, imported as samples for taking orders, for exhibition, display or sampling at a trade fair, for research, for use by embassies of foreign governments or for testing of equipment, provided that written approval of the Licensing Authority is obtained.

7. Section 6.24 is revised to read as follows:

§ 6.24 Application for license.

Applications of the Licensing Authority for the issuance of licenses to enter articles must be made in writing, addressed to the Import Licensing Group, Room 5531–S, Import Policies and Programs Division, Foreign Agricultural Service, U.S. Department of Agriculture, Washington, D.C. 20250–1000. Each application must indicate the Additional U.S. Note number of the Harmonized Tariff Schedule and the country of origin of the article. Unpostmarked applications will not be approved by the Licensing Authority.

8. Section 6.25 is amended by revising paragraph (a), the introductory text of paragraph (c)(1), paragraphs (c)(1)(ii), (c)(1)(iii), (c)(2) and (c)(3) to read as follow:

§ 6.25 Eligibility.

(a) Historical eligibility. Historical eligibility for licenses to enter in-quota shares of articles subject to tariff-rate quotas which are shown in Appendix 1 and Appendix 2 of this subpart, has already been established.

* * * * *

(c)(1) Supplementary license eligibility for specific articles of cheese listed in Appendix 2 and Appendix 3 of this subpart will be established:

(i) * * *

(ii) By application by a person having historical eligibility for a particular article shown in Appendix 2 of this subpart from the country of origin for which such person is seeking supplementary license; or

(iii) By being endorsed in writing by the government of the supplying country as a preferred importer, with such endorsement being sent directly from the government of the supplying country through appropriate channels to the Licensing Authority, and for articles in Appendix 2 of this subpart by meeting one or both of qualifications in paragraphs (c)(1)(i) and (ii) of this section. For articles in Appendix 3 of this subpart such qualifications must be met beginning with the 1996 quota year. Endorsement by the government of a supplying country of a person who is known to the Licensing Authority to have at any time violated any provision of this or any other regulation or law of the United States applicable to international commerce will not be recognized by the Licensing Authority.

(2) Notwithstanding paragraph (b)(4) of this section, certification required to establish supplementary eligibility for license for articles under Appendix 3 of this subpart, must be postmarked no earlier than January 30, 1995 and no later than February 20, 1995. Importers who may have already submitted supplementary license certification for cheese during the application period which ended November 1, 1994 may request license for cheese articles under Appendix 3 of this subpart by submitting an application, provided by the Licensing Authority upon request, without further documentation, postmarked as required in this paragraph.

(3) Supplementary eligibility for specific non-cheese articles listed in Appendix 3 of this subpart will be established by:

(i) Submission of documentary evidence acceptable to the Licensing Authority as required under paragraphs (b)(2)(i) and (ii) of this section, and

(ii) Providing documentary evidence that the applicant has made at least two separate commercial entries or exports of any dairy product totaling not less than 38,000 kilograms during the 1994 calendar year; or at least eight separate commercial entries or exports totaling not less than 18,000 kilograms, each entry or export being a minimum of 2,200 kilograms, with a minimum of two transactions taking place in each of at least three quarters of the 1994 calendar year. U.S. Customs Service Consumption entry documents (Entry Summary Form 7501) and proof of payment in the applicant's name for the entered product and the duty must be provided showing that such person has made the above commercial entries or in the case of a person seeking eligibility on the basis of exports, U.S. Department of Commerce, Bureau of the Census Form 7525–V and the invoice or other proof that the applicant has made the exports of dairy products must be provided; or

(iii)(A) Being listed in the Dairy Plants Surveyed and Approved for USDA Grading Service, and

(B) certifying that the product will be used directly in the plant's own manufacturing or sales/distribution program.

* * * * *

9. Section 6.26 is amended by removing paragraphs (a)(3) through (a)(6) and revising the table in paragraph (b)(1) to read as follows:

§ 6.26 Allocation of annual quota and issuance of licenses.

* * * * *

(b) * * *

(1) * * *

Article	HTS note No.	Minimum quantity (kilograms)
Dried buttermilk and whey	12	1,133
Dried skimmed milk	7	2,267
Dried whole milk	8	453
Butter	6	453
Blue-mold cheese	17	2,267
Cheddar cheese	18	4,535
American-type cheese	19	4,535
Edam and Gouda cheese	20	3,175
Italian-type cow's milk cheese	21	2,267
Swiss or Emmenthaler cheese with eye formation	25	4,535
Swiss or Emmenthaler cheese other than eye-formation Gruyere Process	22	4,535
Other cheese NSPF	16	18,143
Other cheese low fat	23	4,535

* * * * *

§ 6.26 [Amended]

10. Section 6.26 is further amended by removing paragraph (b)(5) and revising the introductory text of paragraph (c) and the introductory text of paragraph (c)(3) to read as follows:

(c) Supplementary licenses (pertaining to articles in Appendix 2 and Appendix 3 of this subpart) for cheese articles:

* * * * *

(c)(3) A supplementary quota share for a cheese article in Appendix 2 or Appendix 3 of this subpart from a particular country of origin other than those provided for in paragraph (c)(2) of this section will be determined on the following basis:

* * * * *

11. Section 6.26 is further amended by removing paragraph (f) and by redesignating paragraphs (d) and (e) as paragraphs (e) and (f). A new paragraph (d) is added to read as follows:

§ 6.26 Allocation of annual quota and issuance of licenses.

* * * * *

(d) Supplementary licenses (pertaining to articles in Appendix 3 of this subpart) for non-cheese articles:

(1) A person with its affiliate(s) or associate(s) will be considered only as one person for the purpose of allocation of such supplementary quota shares. However, a person with an Appendix 1 historical license for such article initially issued for a quota year prior to 1995 is not precluded from applying for such supplementary quota shares.

(2) The size of a supplementary quota share issued to an eligible applicant shall not exceed 57,000 kilograms.

(3) If, after applications for supplementary licenses have been evaluated and tabulated, the Licensing Authority determines that eligible applicants for shares of a particular non-cheese tariff-rate quota in Appendix 3 of this subpart have appropriately requested amounts which together exceed the amount available for allocation, the Licensing Authority shall first assign quota shares of not less than the minimum share as indicated below to each applicant and then prorate the remaining portion available for allocation among them. The minimum share shall be as follows:

(i) 19,000 kilograms where the total amount available for allocation is less than 550,000 kilograms;

(ii) 38,000 kilograms where the total amount available for allocation is greater than 550,001 kilograms.

(4) If applying for more than one supplementary license for non-cheese articles covered by this regulation, the

applicant must rank order these requests by the applicable U.S. Additional Note number for the article being requested. If, after applications for supplementary licenses have been evaluated and tabulated according to the rank order submitted, the Licensing Authority determines that the number of eligible applicants for a minimum tariff-rate quota share for a particular article from a particular country in Appendix 3 of this subpart exceeds the number of available minimum tariff-rate quota shares for that article, the Licensing Authority will then allocate the licenses by random selection. However, once a license is awarded from among the non-cheese articles to an applicant, no other non-cheese license will be awarded to that applicant until all the other applicants have at least received one such license for which they applied, provided that the licenses for which they applied are not already fully allocated. A single tariff-rate quota share for a particular article of less than the minimum may be issued, if appropriate, to facilitate full allocation of a particular tariff-rate quota.

§ 6.27 [Amended]

12. Section 6.27 is amended in paragraph (f) by removing ''7505'' and adding ''7501''; and in paragraph (h) by removing the words ''entry Form 7501 or Customs warehouse withdrawal Form 7505'' and adding in their place ''Form 7501'' and removing the words ''or 7505''.

13. Section 6.28 is amended by revising the first sentence to read as follows:

§ 6.28 Records and inspection.

Any person making an entry, except as provided in § 6.23, of an article listed in Appendix 1, Appendix 2, or Appendix 3 of this subpart is required to retain all records, including invoices of all purchases, entries, withdrawals, sales and deliveries of such articles for a period of not less than two years subsequent to the end of the quota year during which entry was made.

§ 6.29 [Amended]

14. Section 6.29 is amended by removing all references in paragraph (b)(3) to the ''Dairy, Livestock and Poultry Division'' and adding ''Import Policies and Programs Division'' in its place.

§ 6.30 [Amended]

15. Section 6.30 is amended in paragraph (a) by removing paragraphs (a) (1) and (2) and the colon at the end of the introductory text and by adding the following text:

§ 6.30 Adjustment of countries of origin.

(a) * * * any country of origin (global) except where Uruguay Round commitments require the consent of the supplying country. In such case, consent will be sought and action taken only if it is granted for portions of the tariff-rate quota subject to this requirement.

§ 6.34 [Removed]

16. Section 6.34 is removed.

17. Appendix 1 and Appendix 2 of the subpart following § 6.34 are revised and a new Appendix 3 is added as follows:

APPENDIX 1—ARTICLES SUBJECT TO THE HISTORICAL AND NONHISTORICAL LICENSING PROVISIONS OF THE IMPORT REGULATION 1, REVISION 7, AND RESPECTIVE ANNUAL TARIFF-RATE QUOTAS FOR EACH QUOTA YEAR

Article by HTS Note No.	Annual historical/ nonhistorical quota (kilograms)
Group I:	
(a) Butter (Note 6)	320,689
EC	96,161
New Zealand	150,593
Other Countries	73,935
(b) Dried whole milk (Note 8)	3,175
(c) Dried skimmed milk (Note 7)	819,641
(d) Dried buttermilk and whey (Note 12)	224,981
Group II:	
(a) Edam and Gouda cheese (Note 20)	5,606,401
EC	5,248,000
Norway	167,000
Argentina	125,000
Sweden	41,000
Other countries	25,401
(b) Blue-mold cheese (except Stilton made in England) and cheese and substitutes for cheese containing or processed from blue-mold cheese (Note 17)	2,257,001
EC	2,255,000
Argentina	2,000
Other countries	1
Group III:	
(a) Cheddar cheese and cheese and substitutes for cheese containing or processed from Cheddar cheese (Note 18)	3,667,889
EC	263,000
Australia	769,000
New Zealand	2,496,000
Other countries	139,889
(b) American-type cheese, including Colby, washed curd, and granular cheese (but not including cheddar) and cheese and substitutes for cheese containing or processed from such American-type cheese (Note 19)	2,708,556
EC	254,000
Australia	762,000
New Zealand	1,524,000
Other countries	168,556
Group IV:	
(a) Italian-type cheese made from cow's milk (Romano made from cow's milk, Reggiano, Parmesano, Provolone, Provolette, Sbrinz, and Goya not in original loaves) (Note 21)	5,625,064
EC	1,810,000

APPENDIX 1—ARTICLES SUBJECT TO THE HISTORICAL AND NONHISTORICAL LICENSING PROVISIONS OF THE IMPORT REGULATION 1, REVISION 7, AND RESPECTIVE ANNUAL TARIFF-RATE QUOTAS FOR EACH QUOTA YEAR—Continued

Article by HTS Note No.	Annual historical/ nonhistorical quota (kilograms)
Argentina	3,802,000
Other countries	13,064
Group V:	
(a) Swiss or Emmenthaler cheese with eye formation (Note 25)	9,260,276
EC	1,767,000
Austria	3,729,000
Finland	2,772,000
Israel	27,000
Norway	758,000
Switzerland	122,000
Other countries	85,276
(b) Swiss or Emmenthaler cheese other than with eye formation. Gruyere-process cheese, and cheese and substitutes for cheese containing, or processed from such cheese (Note 22)	5,061,833
EC	2,603,000
Austria	638,000
Finland	728,000
Switzerland	1,013,000
Other countries	79,833
(c) Cheese and substitutes for cheese (except cheese not containing cow's milk; soft ripened cow's milk cheese; cheese (except cottage cheese) containing 0.5 percent or less by weight of butterfat), and articles within the scope of other tariff-rate quotas provided for in additional U.S. Notes 17 through 25, inclusive, to this chapter (Note 16)	18,448,859
EC	10,724,000
Austria	90,000
Australia	56,000
Canada	1,141,000
Finland	562,000
Iceland	294,000
Israel	66,000
New Zealand	3,427,000
Norway	150,000
Poland	936,224
Sweden	774,000
Switzerland	98,000
Other countries	130,635
(d) Cheese and substitutes for cheese, containing 0.5 percent or less by weight of butterfat (except articles within the scope of other tariff-rate quotas provided for in additional U.S. Notes 16 through 22, inclusive, or additional U.S. Notes 24 and 25 to this chapter) and margarine cheese (Note 23)	3,951,908
EC	3,777,000
Poland	174,907
Other countries	1

APPENDIX 2—ARTICLES SUBJECT TO THE HISTORICAL AND SUPPLEMENTARY LICENSING PROVISIONS OF IMPORT REGULATION 1, REVISION 7, AND RESPECTIVE ANNUAL TARIFF-RATE QUOTAS FOR EACH QUOTA YEAR

Article by HTS Note No.	Annual historical/ supplementary quota (kilograms)
Group II:	
(c) Blue-mold cheese (except stilton made in England), and cheese and substitutes for cheese containing, or processed from Blue-mold cheese (Note 17)	224,000
EC	224,000
Group III:	
(a) Cheddar cheese, and cheese and substitutes for cheese containing, or processed from Cheddar cheese (Note 18)	1,035,000
New Zealand	604,000
Australia	431,000
(b) American-type cheese, including Colby, washed curd, and granular cheese (but not including Cheddar) and cheese and substitutes for cheese containing, or processed from such American-type cheese (Note 19)	714,000
New Zealand	476,000
Australia	238,000
Group IV:	
(a) Italian-type cheese made from cow's milk, (Romano made from cow's milk, Reggiano, Parmesano, Provolone, Provolette, Sbrinz and Goya not in original loaves) (Note 21)	2,691,000
Argentina	691,000
EC	1,572,000
Uruguay	428,000
Group V:	
(a) Swiss or Emmenthaler cheese with eye formation (Note 25)	22,595,000

APPENDIX 2—ARTICLES SUBJECT TO THE HISTORICAL AND SUPPLEMENTARY LICENSING PROVISIONS OF IMPORT REGULATION 1, REVISION 7, AND RESPECTIVE ANNUAL TARIFF-RATE QUOTAS FOR EACH QUOTA YEAR—Continued

Article by HTS Note No.	Annual historical/ supplementary quota (kilograms)
EC	4,233,000
Argentina	80,000
Austria	2,551,000
Australia	500,000
Canada	70,000
Finland	5,428,000
Iceland	300,000
Norway	6,125,000
Switzerland	3,308,000
(b) Swiss or Emmenthaler cheese other than with eye formation. Gruyere-process cheese; and cheese and substitutes for cheese containing, or processed from such cheese (Note 22)	2,413,000
EC	1,022,000
Austria	282,000
Finland	272,000
Switzerland	837,000
(c) Cheese and substitutes for cheese (except cheese not containing cow's milk; soft ripened cow's milk cheese; cheese (except cottage cheese) containing 0.5 percent or less by weight of butterfat), and articles within the scope of other import quotas provided for in additional U.S. Notes 17 through 25, inclusive, to this chapter) (Note 16)	22,383,000
EC	9,732,000
(of which 353,000 are reserved for Portugal)	
Argentina	100,000
Australia	1,244,000
Austria	560,000
Finland	738,000
Iceland	29,000
Israel	607,000
New Zealand	7,895,000
Sweden	285,000
Switzerland	1,122,000
Other Countries	71,000
(d) Cheese and substitutes for cheese, containing 0.5 percent or less by weight of butterfat (except articles within the scope of other import quotas provided for in additional U.S. Notes 16 through 22, inclusive, or additional U.S. Notes 24 and 25 to this chapter) and margarine cheese (Note 23)	1,523,000
EC	223,000
Israel	50,000
New Zealand	1,000,000
Sweden	250,000

APPENDIX 3—CERTAIN ARTICLES SUBJECT TO THE SUPPLEMENTARY LICENSING PROVISIONS OF IMPORT REGULATION 1, REVISION 7, AND RESPECTIVE ANNUAL TARIFF-RATE IMPORT QUOTAS FOR 1995

Article by HTS Annual Note No.	Annual Supplementary quota (kilograms)
Butter (Note 6)	3,656,311
Dried Skim Milk (Note 7)	441,359
Dried Whole Milk (Note 8)	368,125
Butter Substitutes Containing over 45% by weight of butterfat and butteroil (Note 14)	3,480,500
Cheese and substitutes for cheese (except cheese not containing cow's milk; soft ripened cow's milk cheese; cheese (except cottage cheese) containing 0.5 percent or less by weight of butterfat), and articles within the scope of other tariff-rate quotas provided for in additional U.S. Notes 17 through 25, inclusive, to this chapter) (Note 16)	2,441,666
Australia	291,666
Costa Rica	1,000,000
Czech Republic	200,000
Slovak Republic	600,000
Uruguay	250,000
Any Country	100,000
Blue-mold cheese (except Stilton made in England) and cheese and substitutes for cheese containing or processed from blue-mold cheese (Note 17)	63,333
Chile	13,333
Czech Republic	50,000
Cheddar cheese and cheese and substitutes for cheese containing or processed from Cheddar cheese (Note 18)	1,245,000
Australia	208,333
Chile	36,667
Czech Republic	50,000
New Zealand	850,000
Any Country	100,000

APPENDIX 3—CERTAIN ARTICLES SUBJECT TO THE SUPPLEMENTARY LICENSING PROVISIONS OF IMPORT REGULATION 1, REVISION 7, AND RESPECTIVE ANNUAL TARIFF-RATE IMPORT QUOTAS FOR 1995—Continued

Article by HTS Annual Note No.	Annual Supplementary quota (kilograms)
Edam and Gouda cheese, and cheese and substitutes for cheese, containing, or processed from, Edam and Gouda Cheese (Note 20)	210,000
Argentina	110,000
Czech Republic	100,000
Italian-Type cheese made from cow's milk (Romano made from cow's milk, Reggiano, Parmesano, Provolone, Provolette, Sbrinz, and Goya not in original loaves) and cheese and substitutes for cheese containing, or processed from, such Italian-type cheese, whether or not in original loaves (Note 21)	3,123,333
Argentina	1,890,000
Uruguay	750,000
Hungary	400,000
Romania	83,333
Swiss-Emmenthaler cheese with eye formation (Note 25)	800,000
Czech Republic	400,000
Hungary	400,000

Signed at Washington, D.C., on December 27, 1994.

Mike Espy,

Secretary of Agriculture.

[FR Doc. 95–298 Filed 1–3–95; 3:51 pm]

BILLING CODE 3410–10–P

Federal Crop Insurance Corporation

7 CFR Part 400

Subpart T—Federal Crop Insurance Reform Act of 1994; Regulations for Implementation

RIN 0563–AB11

AGENCY: Federal Crop Insurance Corporation.

ACTION: Interim rule.

SUMMARY: The Federal Crop Insurance Corporation (''FCIC'') hereby amends its General Administrative Regulations located at 7 CFR part 400 by adding subpart T. The intended effect of this interim rule is to provide noninsured producers, policyholders and insurance companies the policies and regulations applicable to the Catastrophic Risk Protection Program and provide other changes in FCIC insurance programs to comply with the statutory mandates of the Federal Crop Insurance Act as amended by the Federal Crop Insurance Reform Act of 1994.

DATES: This rule is effective January 6, 1995. Written comments, data, and opinions on this rule will be accepted until close of business March 7, 1995 and will be considered when the rule is to be made final.

ADDRESSES: Written comments, data, and opinion on this interim rule should be sent to Diana Moslak, Regulatory and Procedural Development Staff, Federal Crop Insurance Corporation, USDA, Washington, D.C. 20250. Hand or messenger delivery may be made to Suite 500, 2101 L Street, N.W., Washington D.C. Written comments will be available for public inspection and copying in the Office of the Manager, 2101 L Street, N.W., 5th Floor, Washington, D.C., during regular business hours, Monday through Friday.

FOR FURTHER INFORMATION CONTACT: For further information and a copy of the Regulatory Impact Analysis to the regulations for implementation of the Federal Crop Insurance Reform Act of 1994, contact Diana Moslak, Federal Crop Insurance Corporation, U.S. Department of Agriculture, Washington, D.C. 20250. Telephone (202) 254–8314.

SUPPLEMENTARY INFORMATION: This action has been reviewed under United States Department of Agriculture (''USDA'') procedures established by Executive Order 12866 and Departmental Regulation 1512–1. This action constitutes a review as to the need, currency, clarity, and effectiveness of these regulations under those procedures. The sunset review date established for these regulations is December 1, 1999.

This rule has been determined to be ''economically significant'' for the purposes of Executive Order 12866, and therefore, has been reviewed by the Office of Management and Budget (''OMB'').

A Regulatory Impact Analysis has been completed and is available to interested persons at the address listed above. In summary, the analysis finds that crop insurance reform generally is expected to result in net positive benefits to producers, taxpayers, and society. The effects on individual producers compared to payments under ad hoc disaster programs depends primarily on the farm program payment yield compared to the farm's actual yield and market prices. In general, however, the reform is expected to result in less volatility of producer's incomes and lesser risk of no income due to adverse weather events. Rural communities and farmers will benefit from the certainty of payments in times of catastrophic yield losses. The Government and taxpayers will benefit from a single disaster protection program and consequent reduced Federal outlays. Although some producers (previous non-participants in crop insurance) will have an added burden to make application and report yields and acreage, the benefits in terms of greater risk protection outweigh the costs.

The information collection and record-keeping requirements set forth in this interim rule have been submitted to OMB for emergency clearance under 7 CFR part 402.

It has been determined under section 6(a) of Executive Order 12612, Federalism, that this rule does not have sufficient federalism implication to warrant the preparation of a Federalism Assessment. The provisions and procedures contained in this rule will not have a substantial direct effect on states or their political subdivisions, or on the distribution of power and responsibilities among the various levels of government.

Under the Regulatory Flexibility Act (5 U.S.C. § 605), this regulation will not have a significant impact on a substantial number of small entities. Producers will be able to certify to their historical production levels at the time of application based on existing records, or they may elect to base their insurance on assigned yields, which will not require maintenance of production records by the insurance agent. The

amount of data collected by the agent for new insureds is not greater than the amount of data collected for existing insureds. Insureds may elect to keep production records to increase the amount of production covered by insurance but such production is not required to participate in the program. The benefits in terms of risk reduction and protection from severe losses will out-weigh any record-keeping costs. Therefore, this action is determined to be exempt from the provisions of the Regulatory Flexibility Act and no Regulatory Flexibility Analysis was prepared.

This program is listed in the Catalog of Federal Domestic Assistance under No. 10.450.

This program is not subject to the provisions of Executive Order 12372 which require intergovernmental consultation with State and local officials. See the Notice related to 7 CFR part 3015, subpart V, published at 48 FR 29115, June 24, 1983.

The Office of the General Counsel has determined that these regulations meet the applicable standards provided in subsections 2(a) and 2(b)(2) of Executive Order 12778. The provisions of this rule will preempt state and local laws to the extent such state and local laws are inconsistent herewith. The administrative appeal provisions located at 7 CFR part 400, subpart J, and for catastrophic risk protection contracts of insurance delivered through local USDA offices, the National Appeal Division administrative appeal provisions under the Department of Agriculture Reorganization Act of 1994 must be exhausted before judicial action may be brought.

This action is not expected to have any significant impact on the quality of the human environment, health, and safety. Therefore, neither an Environmental Assessment nor an Environmental Impact Statement is needed.

This interim rule implements programs mandated by the amendments to the Federal Crop Insurance Act by the Federal Crop Insurance Reform Act of 1994. Those amendments required that the statutory changes be implemented for the 1995 crop year. All of the contract change dates and many of the sales closing dates for 1995 insured crops have passed or will soon pass. Many of the changes contained in these regulations are mandated by statute. Planting decisions for 1995 crops have been or will shortly be made and it is necessary that producers, lenders, and suppliers know the parameters and requirements of the program. Therefore, it is impractical and contrary to the public interest to publish this rule for notice and comment prior to making the rule effective. However, comments are solicited for 60 days after the date of publication in the **Federal Register** and will be considered by FCIC before this rule is made final.

On October 13, 1994, the amendments to the Federal Crop Insurance Act made by the Federal Crop Insurance Reform Act of 1994, were effective. This regulation will provide the policy and procedures to carry out the insurance requirements of the Reform Act. A separate part will be issued to address noninsured assistance.

List of Subjects in 7 CFR Part 400, Subpart T

General administrative regulations, Federal Crop Insurance Reform Act of 1994, Insurance.

Interim Rule

For the reasons set out in the preamble, a new subpart T is added to 7 CFR part 400, effective for the 1995 and succeeding crop years, to read as follows:

PART 400—GENERAL ADMINISTRATIVE REGULATIONS

Subpart T—Federal Crop Insurance Reform Act of 1994, Insurance Implementation; Regulations for the 1995 and Subsequent Crop Years

Sec.

400.650 Purpose.
400.651 Definitions.
400.652 Insurance availability.
400.653 Application and acreage report.
400.654 Coverage provided.
400.655 Administrative fees and waivers.
400.656 Eligibility for other program benefits.
400.657 Coverage for acreage that is prevented from being planted.
400.658 Transitional yield for forage or feed crops, 1995–1997 crop years.

Authority: 7 U.S.C. 1506(l).

§ 400.650 Purpose.

The Federal Crop Insurance Act as amended by the Federal Crop Insurance Reform Act of 1994 (the ''Act'') requires the Federal Crop Insurance Corporation (''FCIC'') to implement a crop insurance program which offers several levels of insurance coverage for producers. These levels of protection include catastrophic risk protection, limited coverage and additional coverage insurance. This subpart provides notice of the availability of these new crop insurance options and establishes provisions and requirements for implementation of the insurance provisions of the Act. The regulations for the noninsured assistance provisions of the Act will be published elsewhere in chapter IV.

§ 400.651 Definitions.

(a) *Additional coverage*—A plan of crop insurance providing a level of coverage equal to or greater than sixty-five percent (65%) of the approved yield indemnified at one-hundred percent (100%) of the expected market price or comparable coverage as established by FCIC.

(b) *Approved insurance provider*—A private insurance company, including their agents, that has been approved and reinsured by FCIC to provide insurance coverage to producers participating in the Federal crop insurance program.

(c) *Approved yield*—The average amount of production per acre obtained under FCIC's Actual Production History Program (7 CFR part 400, subpart G) using production records of the insured or yields assigned by FCIC. At least four crop years of yields must be averaged to obtain the approved yield.

(d) *Catastrophic risk protection endorsement*—The part of the crop insurance policy that contains provisions of insurance that are specific to catastrophic risk protection.

(e) *Catastrophic risk protection*—The minimal level of coverage offered by FCIC, which is required before a person may qualify for certain other United States Department of Agriculture (''USDA'') program benefits. For the 1995 through 1998 crop years, such coverage will be equal to fifty percent (50%) of the approved yield indemnified at sixty percent (60%) of the expected market price, or a comparable coverage as established by FCIC. For the 1999 and subsequent crop years, such coverage will be equal to fifty percent (50%) of the approved yield indemnified at fifty-five percent (55%) of the expected market price, or a comparable coverage as established by FCIC.

(f) *Crop of economic significance*—A crop that has either contributed in the previous crop year, or is expected to contribute in the current crop year, ten percent (10%) or more of the total expected value of your share of all crops grown by the producer in the county. However, notwithstanding the preceding sentence, if the total expected liability under the catastrophic risk protection endorsement is equal to or less than the administrative fee required for the crop, such crop will not be considered a crop of economic significance.

(g) *FCIC*—The Federal Crop Insurance Corporation, a wholly owned Government Corporation within the

Consolidated Farm Services Agency, USDA.

(h) *Limited coverage*—A plan of insurance offering coverage that is equal to or greater than fifty percent (50%) of the approved yield indemnified at one hundred percent (100%) of the expected market price, or a comparable coverage as established by FCIC, but less than sixty-five percent (65%) of the approved yield indemnified at one hundred percent (100%) of the expected market price, or a comparable coverage as established by FCIC.

(i) *Limited resource farmer*—A producer or operator of a small or family farm, including a new producer or operator, with an annual gross income of less than $20,000 derived from all sources of revenue for each of the prior two years and who demonstrates a need to maximize farm income. Notwithstanding the preceding sentence, a producer on a farm of less than 25 acres aggregated for all crops, where the producer derives a majority of the producer's gross income from the farm, but the producer's gross income from farming operations does not exceed $20,000, will be considered a limited resource farmer.

(j) *Person*—An individual, partnership, association, corporation, estate, trust, or other legal entity, and wherever applicable, a state or a political subdivision or agency of a state.

(k) *Secretary*—The Secretary of the United States Department of Agriculture.

§ 400.652 Insurance availability.

(a) If sufficient actuarial data are available FCIC will offer catastrophic risk protection, limited, and additional coverage plans of insurance to indemnify persons for FCIC insured or reinsured crop loss due to loss of yield or prevented planting, if the crop loss or prevented planting is due to an insured cause of loss specified in the applicable crop insurance policy.

(b) Catastrophic risk protection coverage will be offered through approved insurance providers and through local offices of the Consolidated Farm Service Agency, USDA. Limited and additional coverage will only be offered through approved insurance providers unless approved insurance providers are not available.

(c) To obtain catastrophic risk protection coverage on a crop, a person must obtain catastrophic risk protection coverage for the crop on all insurable acreage in the county. Catastrophic risk protection coverage must be obtained on or before the sales closing date designated by FCIC for the crop in the county.

(d) Effective for the 1995 crop year only, and only for catastrophic risk protection, notwithstanding any provision in any crop insurance policy, reinsured by FCIC, the sales closing dates will be as follows:

(1) For those crops for which insurance attached before January 1, 1995, the sales closing date will be the latest sales closing date for spring planted crops in the county as long as such sales closing date is not later than April 12, 1995;

(2) For those crops for which insurance attached after January 1, 1995, and have a sales closing date prior to February 15, 1995, the sales closing date will be February 15, 1995; and

(3) For all other spring planted crops, the sales closing date will remain as specified in the policy.

(e) For limited and additional coverage, in areas where insurance is not available for a particular agricultural commodity, FCIC may offer to enter into a written agreement with a person to insure the commodity, if the person has actuarially sound data relating to the production of the commodity that is acceptable to FCIC and if such written agreement is specifically allowed by the crop insurance regulations applicable to the crop.

(f) A person who made timely purchase of a crop insurance policy on a 1995 or subsequent crop before October 13, 1994, the date of enactment of the Federal Crop Insurance Reform Act of 1994, may continue with the purchased policy under the terms and conditions of that policy but will receive whatever benefits would be available under that policy if it had been purchased subsequent to the date of enactment. However, if the level of coverage is less than the coverage under the catastrophic risk protection coverage, the insured must either upgrade that coverage to at least catastrophic risk protection coverage or lose eligibility for certain farm program benefits as set out in § 400.656.

§ 400.653 Application and acreage report.

(a) To participate in catastrophic risk protection, limited, or additional coverage plans of insurance, a person must submit an application for insurance on or before the applicable sales closing date.

(b) In order to remain eligible for certain farm programs, as set out in § 400.656, a producer must obtain at least catastrophic risk protection coverage on all crops of economic significance if catastrophic risk protection is available. Notwithstanding the requirement contained in § 400.653 (a), if the insured is not able to plant a crop for which coverage has been obtained, FCIC may, at its discretion, determine that conditions exist that would permit the person to insure alternative crops to those specified on the application. If FCIC determines that such conditions exist, the insured may insure the alternative crops by making application for catastrophic risk protection coverage on the alternative crops after the sales closing date but before the acreage reporting date for the alternative crops and paying the appropriate administrative fee. Limited or additional coverage is not available after the sales closing date.

(c) For catastrophic risk protection, limited, and additional coverage, FCIC may allow the insured to certify the insured's actual production history (''APH'') yield. If FCIC permits certification of the APH yield by the insured, the insured must, at the request of FCIC or the approved insurance provider, provide verifiable records of acreage and production acceptable to FCIC for the years for which production and acreage were certified. If FCIC or the approved insurance provider determine that inadequate records exist to substantiate the certified yield, FCIC will, in addition to any civil fraud or criminal penalties which may exist for false certification, recalculate the APH yield using assigned yields for the crop years represented by the inadequate records.

(d) For all coverages including catastrophic risk protection, limited, and additional coverages, the insured must file a signed acreage report on or before the acreage reporting date.

§ 400.654 Coverage provided.

(a) The specific causes of loss insured against are designated in the crop insurance policy for the applicable crop.

(b) An indemnity paid to a producer may be reduced to reflect out-of-pocket expenses that were not incurred by the producer as a result of not planting, caring for, or harvesting the crop.

(c) Catastrophic risk protection.

(1) A person who is eligible to receive an indemnity under a catastrophic risk protection plan of insurance and is also eligible to receive benefits for the same loss under other USDA programs must elect the program from which they wish to receive benefits. Only one payment or program benefit will be allowed.

(2) Catastrophic risk protection must be elected on a crop basis unless the Catastrophic Risk Protection Endorsement allows individual crop types or varieties to be considered separate crops. However, any acreage of

an insured crop that is designated by FCIC as ''high risk land'' may be insured under catastrophic risk protection if limited or additional coverage is obtained for all insurable acreage of the insured crop in the county that is not designated as ''high risk land''; *Provided that*, the insured executes the High Risk Land Exclusion Option under the limited or additional coverage policy. The catastrophic risk protection policy must be obtained from the same insurance provider from which the limited or additional coverage is obtained.

(3) Catastrophic risk protection may, on a commodity-by-commodity basis, be elected on an individual yield and loss basis, or, where offered, may be elected on an area yield and loss basis.

(4) Any person who has a bona fide insurable interest in a crop as an owner-operator, landlord, tenant, or share-cropper, will be eligible for catastrophic risk protection coverage.

(5) The Catastrophic Risk Protection Endorsement contains coverage limitations and exclusions, including but not limited to:

(i) Coverage is available by basic units only. A basic unit is all the acreage of the crop in the county in which the insured has a one-hundred percent (100%) crop share or all the acreage of the crop in the county owned by one person and operated by another person on a share basis (unless otherwise provided by the Catastrophic Risk Protection Endorsement);

(ii) No replant payments will be paid whether or not replanting of the crop is required under the policy;

(iii) No policy options or endorsements providing increased coverage over that provided under the catastrophic risk plan for that crop will be available unless such option or endorsement is specifically made applicable to catastrophic coverage by its terms;

(iv) The insured may not exclude coverage for hail and fire or High Risk Land; and

(v) Written Agreements are not available unless specifically allowed by the Catastrophic Risk Protection Endorsement.

(d) Limited and additional coverage.

(1) An insured who is eligible to receive an indemnity under a limited or an additional coverage plan of insurance and who is also eligible to receive benefits for the same loss under any other USDA program may receive benefits under both programs unless specifically limited by the crop insurance policy. However, the total amount received for the loss will not exceed the amount of the actual loss sustained by the insured. The amount of the actual loss will be the difference between the fair market value of the production before and after the loss, as determined by the approved insurance provider based upon the insureds production records.

(2) Limited and additional coverage must be elected on a crop basis and cover all insurable acreage of the crop in the county in which the insured has a share unless:

(i) The applicable crop insurance policy allows the insured to purchase separate policies of insurance covering individual crop types or varieties. In such instances, protection may be elected on a crop type (as designated in the crop insurance policy) or variety basis. These individual crop types or varieties will be considered separate crops for insurance purposes, including the payment of administrative fees. (For example, if two grape varieties grown in California are insured under a catastrophic risk protection policy and two varieties are insured under an additional coverage policy, an administrative fee will be charged for each of the two (2) varieties under the catastrophic risk protection policy and an administrative fee will be charged for each of the two (2) varieties under the additional coverage policy. The same rationale would allow the insured the option to not insure a crop type or variety. However, failure of the insured to insure a crop type or variety which is determined to be a crop of economic significance would make the insured ineligible for certain other USDA programs.)

(ii) The insured executes the High Risk Land Exclusion Option for a limited or additional coverage policy. In such cases the insured may elect to insure the ''high risk land'' under a catastrophic risk protection policy. If both policies are in force, that acreage of the crop covered under the limited or additional coverage policy and the acreage of the crop covered under the catastrophic risk protection policy will be considered as separate crops for insurance purposes, including the payment of administrative fees.

(3) Limited or additional coverage may, on a commodity-by-commodity basis, be elected on an individual yield and loss basis, or, where offered, on an area yield and loss basis.

(4) Hail and fire coverage may be excluded from the covered causes of loss in a crop policy if additional coverage is elected.

(5) If a person purchases limited or additional coverage for a crop, the insured must purchase limited or additional coverage for all insurable acreage of that crop in the county unless otherwise provided in this part or in the crop insurance contract.

§ 400.655 Administrative fees and waivers.

(a) Catastrophic risk protection and limited coverage.

(1) If the insured elects to obtain catastrophic risk protection or limited coverage, the insured must pay an administrative fee each year of fifty dollars ($50.00) per crop, per county, not to exceed two hundred dollars ($200.00) per county, and six hundred dollars ($600) for all counties in which the insured has coverage. The insured must pay this administrative fee at the time of application for the first year, and by the acreage reporting date for all subsequent years that crop insurance coverage is in effect. Payment of an administrative fee will not be required if the insured files a bona fide zero acreage report on or prior to the acreage reporting date for any year except the year of application. If the administrative fee is not paid at the time of application, or by the acreage reporting date, whichever is applicable, the crop insurance contract will not be in effect for the crop year for which the fee is due and will terminate, and the person will not be eligible for certain USDA programs as set out in § 400.656.

(2) The administrative fee may not be waived unless the insured qualifies as a limited resource farmer.

(3) The administrative fee will be refunded if the insured has previously obtained catastrophic risk protection, or limited coverage, paid the administrative fee, and subsequently purchases additional coverage for that same crop in the same county on or before the sales closing date. Administrative fees will be refunded only if the insured has not purchased catastrophic risk protection and limited coverage in excess of the maximum administrative fee to be paid in the applicable situation.

(4) The administrative fee will not be refunded for the year of application even if the insured files a zero acreage report for that year.

(5) For limited coverage, the administrative fee is in addition to the premium amount.

(b) Additional Coverage.

(1) If additional coverage is elected, the insured must pay, in addition to the premium, an administrative fee of ten dollars ($10) per crop, per county, each year in which crop insurance coverage remains in effect. The administrative fee is payable at the time insurance attaches. If the administrative fee is not paid by the termination date set out in the crop insurance contract, the crop

insurance contract will be voided and not have been in effect for the crop year for which the fee is due and will terminate, and the person failing to pay the fee will not be or have been eligible for certain other USDA program benefits as set out in § 400.656 and any of those benefits received for the crop year must be refunded.

(2) The administrative fee for additional coverage is not refundable and may not be waived.

(c) When obtaining catastrophic risk protection, limited, or additional coverage, an insured must provide information regarding crop insurance coverage on any crop previously obtained at any other local USDA office or from an approved insurance provider, including the date such insurance was obtained, and the amount paid in administrative fees. If the insured has paid in excess of the maximum allowable amount in administrative fees, the insured will receive a refund of the excess fees paid from the local USDA office or from the approved insurance provider that collected the excess amount.

§ 400.656 Eligibility for other program benefits.

The insured must obtain at least the catastrophic risk protection level of coverage for each crop of economic significance in the county in which the insured has an interest, if insurance is available in the county for the crop, to be eligible for:

(a) Price support and production adjustment programs, including tobacco, rice, extra long staple cotton, upland cotton, feed grains, wheat, peanuts, oilseeds, and sugar;

(b) Loans or any other USDA-provided farm credit including guaranteed and direct farm ownership loans, operating loans, and emergency loans under the Consolidated Farm and Rural Development Act; and

(c) The Conservation Reserve Program.

§ 400.657 Coverage for acreage that is prevented from being planted.

(a) 1994 crop year prevented planting for all crops of wheat, feed grain, cotton, and rice:

(1) For the 1994 crop year only, an insured may receive compensation for acreage that was prevented from being planted due to major, widespread flooding in the Midwest, or excessive ground moisture, that occurred prior to the spring sales closing date for the 1994 crop year.

(2) To be eligible for compensation the insured must have:

(i) Purchased a crop insurance policy containing prevented planting provisions prior to the spring sales closing date for the 1994 crop year;

(ii) Had a reasonable expectation of planting the insured crop on acreage that was eligible for prevented planting coverage under the terms of the crop insurance contract, (if it is determined that the acreage eligible for the prevented planting coverage under the terms of the crop insurance policy would have drained sufficiently to plant the crop except for additional moisture that occurred in the spring, the insured will be assumed to have had a reasonable expectation of planting the crop absent some other intervening cause); and

(iii) Participated in a conserving use program established for the 1994 crop of wheat, feed grains, upland cotton, or rice established under the Agricultural Act of 1949, whichever is applicable.

(3) FCIC will pay as compensation under the prevented planting provisions of the crop insurance policy, the difference between:

(i) The amount of any prevented planting payment that would have been due under the prevented planting provision of the 1994 crop year crop insurance policy (prevented planting indemnity less premium); and

(ii) The amount paid under the conserving use program for the same crop and acreage.

(b) 1994 crop year prevented planting for oilseeds:

(1) If the insured satisfies the requirements of section (a)(2) (i) and (ii), the insured will be eligible for a prevented planting payment on the oil seed crop.

(2) FCIC will pay as compensation under this prevented planting provision the amount payable under the prevented planting provision of the applicable 1994 crop year crop insurance policy (prevented planting indemnity less premium).

(c) 1995 and succeeding crop year prevented planting coverage:

Effective for the 1995 and subsequent crop years, the insurance period for prevented planting for those crop insurance policies containing prevented planting coverage shall be extended so that prevented planting coverage begins:

(1) On the sales closing date for the insured crop in the county for the crop year the application for insurance is accepted; or

(2) For any crop year following the crop year the application for insurance is accepted, or for any crop year the insurance policy is transferred to a different insurance provider, on the sales closing for the insured crop in the county for the previous crop year, provided continuous coverage has been in effect since that date. *For example:* If the insured makes application and purchases a corn crop insurance policy for the 1995 crop year, prevented planting coverage will begin on the 1995 sales closing date for corn in the county. If the corn policy remains in effect for the 1996 crop year (is not terminated or cancelled during or after the 1995 crop year), or is transferred to a different insurance provider, prevented planting coverage for the 1996 crop began on the 1995 sales closing date.

§ 400.658 Transitional yields for forage or feed crops for the 1995 through 1997 crop years

(a) For the 1995 through the 1997 crop year, insureds who produce feed or forage may be eligible for an adjustment in the assigned yield available under § 400.55(b)(1) if:

(1) The feed or forage is primarily for on-farm use in a livestock, dairy, or poultry operation; and

(2) The insured derives at least fifty percent (50%) of the insured's net farm income from the livestock, dairy, or poultry operation.

(b) Insureds that qualify under (a) of this section will receive an assigned yield, if required, under § 400.55(b)(1) of 80 percent of the T or D-Yield.

Done in Washington, D.C., on December 21, 1994.

Suzette Dittrich,

Acting Manager, Federal Crop Insurance Corporation.

[FR Doc. 95–358 Filed 1–3–95; 3:38 pm]

BILLING CODE 3410–08–U

---

7 CFR Part 402

RIN 0563–AB09

Catastrophic Risk Protection Endorsement

AGENCY: Federal Crop Insurance Corporation.

ACTION: Interim rule.

SUMMARY: The Federal Crop Insurance Corporation (''FCIC'') hereby adds a new part 402 to chapter IV of title 7 of the Code of Federal Regulations (''CFR''). The intended effect of this interim rule is to provide a catastrophic risk protection plan of insurance, the lowest level of coverage required to be purchased by a producer to be eligible for certain other agricultural farm program benefits, to comply with statutory mandates of the Federal Crop Insurance Act as amended by the Federal Crop Insurance Reform Act of 1994.

DATES: This rule is effective January 6, 1995. Written comments, data, and

opinions on this rule will be accepted until close of business March 7, 1995, and will be considered when the rule is to be made final.

ADDRESSES: Written comments, data, and opinion on this interim rule should be sent to Diana Moslak, Regulatory and Procedural Development Staff, Federal Crop Insurance Corporation, USDA, Washington, D.C. 20250. Hand or messenger delivery may be made to Suite 500, 2101 L Street, N.W., Washington D.C. Written comments will be available for public inspection and copying in the Office of the Manager, 2101 L Street, N.W., 5th Floor, Washington, D.C., during regular business hours, Monday through Friday.

FOR FURTHER INFORMATION CONTACT: For further information and a copy of the Regulatory Impact Analysis to the Catastrophic Risk Protection Endorsement, contact Diana Moslak, Federal Crop Insurance Corporation, U.S. Department of Agriculture, Washington, D.C. 20250. Telephone (202) 254–8314.

SUPPLEMENTARY INFORMATION: This action has been reviewed under United States Department of Agriculture (''USDA'') procedures established by Executive Order 12866 and Departmental Regulation 1512–1. This action constitutes a review as to the need, currency, clarity, and effectiveness of these regulations under those procedures. The sunset review date established for these regulations is December 1, 1999.

This rule has been determined to be ''economically significant'' for the purposes of Executive Order 12866, and therefore, has been reviewed by the Office of Management and Budget (''OMB'').

A Regulatory Impact Analysis has been completed and is available to interested persons at the address listed above. In summary, the analysis finds that crop insurance reform generally is expected to result in net positive benefits to producers, taxpayers, and society. The effects on individual producers compared to payments under ad hoc disaster programs depends primarily on the farm program payment yield compared to the farm's actual yield and market prices. In general, however, the reform is expected to result in less volatility of producer's incomes and lesser risk of no income due to adverse weather events. Rural communities and farmers will benefit from the certainty of payments in times of catastrophic yield losses. The Government and taxpayers will benefit from a single disaster protection program and consequent reduced Federal outlays. Although some producers (previous non-participants in crop insurance) will have an added burden to make application and report yields and acreage, the benefits in terms of greater risk protection outweigh the costs.

This interim rule amends the existing information collection as approved by the Office of Management and Budget (OMB) pursuant to the Paperwork Reduction Act of 1980 (44 U.S.C. 3501 *et seq.*), under OMB control numbers 0563–0001, 0563–0003, and 0563–0029. Due to the time constraints of implementing the rule immediately, the agency has requested emergency clearance of this addendum from OMB. Comments on the information collection may be sent to the Office of Information and Regulatory Affairs, Office of Management and Budget, Room 10202, NEOB, Washington, D.C. 20503. Attention: Desk Officer for USDA.

It has been determined under section 6(a) of Executive Order 12612, Federalism, that this rule does not have sufficient federalism implication to warrant the preparation of a Federalism Assessment. The provisions and procedures contained in this rule will not have a substantial direct effect on states or their political subdivisions, or on the distribution of power and responsibilities among the various levels of government.

Under the Regulatory Flexibility Act (5 U.S.C. 605), this regulation will not have a significant impact on a substantial number of small entities. Producers will be able to certify to their historical production levels at the time of application based on existing records, or they may elect to base their insurance on assigned yields, which will not require maintenance of production records by the insurance agent. The amount of data collected by the agent for new insureds is not greater than the amount of data collected for existing insureds. Insureds may elect to keep production records to increase the amount of production covered by insurance but such production is not required to participate in the program. The benefits in terms of risk reduction and protection from severe losses will out-weigh any record-keeping costs. Therefore, this action is determined to be exempt from the provisions of the Regulatory Flexibility Act and no Regulatory Flexibility Analysis was prepared.

This program is listed in the Catalog of Federal Domestic Assistance under No. 10.450.

This program is not subject to the provisions of Executive Order 12372 which require intergovernmental consultation with State and local officials. See the Notice related to 7 CFR part 3015, subpart V, published at 48 FR 29115, June 24, 1983.

The Office of the General Counsel has determined that these regulations meet the applicable standards provided in subsections 2(a) and 2(b)(2) of Executive Order 12778. The provisions of this rule will preempt state and local laws to the extent such state and local laws are inconsistent herewith. The administrative appeal provisions located at 7 CFR part 400, subpart J, and for catastrophic risk protection contracts of insurance delivered through local USDA offices, the National Appeal Division administrative appeal provisions under the Department of Agriculture Reorganization Act of 1994 must be exhausted before judicial action may be brought.

This action is not expected to have any significant impact on the quality of the human environment, health, and safety. Therefore, neither an Environmental Assessment nor an Environmental Impact Statement is needed.

This interim rule implements programs mandated by the amendments to the Federal Crop Insurance Act by the Federal Crop Insurance Reform Act of 1994. Those amendments required that the statutory changes be implemented for the 1995 crop year. All of the contract change dates and many of the sales closing dates for 1995 insured crops have passed or will soon pass. Many of the changes contained in these regulations are mandated by statute. Planting decisions for 1995 crops have been or will shortly be made and it is necessary that producers, lenders, and suppliers know the parameters and requirements of the program. Therefore, it is impractical and contrary to the public interest to publish this rule for notice and comment prior to making the rule effective. However, comments are solicited for 60 days after the date of publication in the **Federal Register** and will be considered by FCIC before this rule is made final.

On October 13, 1994, the amendments to the Federal Crop Insurance Act, made by the Federal Crop Insurance Reform Act of 1994, were effective. This regulation will provide the policy and procedures to carry out catastrophic risk protection insurance requirements of the Reform Act.

Background

Upon publication of 7 CFR part 402, this regulation will provide catastrophic risk protection crop insurance through an endorsement that amends new and existing crop insurance policies,

endorsements, and provisions when purchased by the insured. The amendments are as follows:

1. Section 402.4, subsection 2.(b) specifies that to be eligible for catastrophic coverage a producer must be a person as defined in the crop policy.

2. Section 402.4, subsection 2.(c) provides for the termination of this endorsement if the insured fails to pay the administrative fee, elects to purchase limited or additional coverage, or if the applicable crop policy is terminated or cancelled.

3. Section 402.4, section 3 specifies that a unit is all of the insurable acreage of the insured crop in the county on the date coverage begins for the crop year, in which the insured has a 100 percent (100%) share. Land which is owned by one person and operated by another person on a share basis is considered a separate unit.

4. Section 402.4, subsection 4.(a) specifies that for the 1995 through 1998 crop years, coverage will be equal to fifty percent (50%) of the producer's approved yield indemnified at sixty percent (60%) of the expected market price, or a comparable coverage as established by FCIC.

5. Section 402.4, subsection 4.(b) specifies that for the 1999 and subsequent crop years, coverage will be equal to fifty percent (50%) of the producer's approved yield indemnified at fifty-five percent (55%) of the expected market price, or a comparable coverage as established by FCIC.

6. Section 402.4, subsection 4.(d) allows the insured the option of selecting catastrophic risk coverage, on a commodity-by-commodity basis, on either an individual yield and loss basis or an area yield and loss basis, if both options are offered in the Actuarial Table or Special Provisions.

7. Section 402.4, subsection 5.(a) specifies that the insured will not be responsible to pay a premium for catastrophic coverage.

8. Section 402.4, subsection 5.(b) requires the insured to pay an administrative fee of $50 per crop per county. Each type or variety specified in subsections 6.(a) and (b) and crop acreage specified in subsection 6.(c) will be considered a separate crop to which separate administrative fees apply. Total administrative fees for all crops insured under any combination of catastrophic coverage and limited coverage will not exceed $200 per producer per county, up to a maximum of $600 for all counties in which the producer has crops insured.

9. Section 402.4, subsection 5.(c) specifies that the administrative fee for catastrophic coverage must be paid to the insurance provider at the time of application and will not be refunded if the insured files a zero acreage report the first crop year for which the application is accepted. For subsequent years, the administrative fee must be paid annually by the acreage reporting date, however, in subsequent years no administrative fee is required if the producer files a bona fide zero acreage report on or before the acreage reporting date. The administrative fee will be waived for a limited resource farmer.

10. Section 402.4, subsection 5.(d) specifies that the administrative fee will be refunded if, after applying for catastrophic coverage and paying the administrative fee, the producer elects to purchase additional coverage for such crop. Administrative fees will be refunded only if the producer has not purchased catastrophic risk protection and limited coverage in excess of the maximum administrative fee to be paid in the applicable situation.

11. Section 402.4, subsections 6.(a) and (b) specify the insured crop is provided in the applicable crop policy documents, except that each specified type of Stonefruit, Texas Citrus, Florida Citrus, Arizona-California Citrus, Texas Citrus Trees, and Guaranteed Tobacco, and each grape variety grown in California specified in the Special Provisions, that the producer elects to insure, will be insured as a separate crop.

12. Section 402.4, subsection 6.(c) specifies that if the producer purchased limited or additional coverage for a crop, the producer may separately insure acreage that has been designated as high risk by FCIC provided that the producer has executed a high risk exclusion option under that policy and obtained a catastrophic risk protection policy with the same approved insurance provider and pays separate administrative fees for each policy in effect.

13. Section 402.4, section 7 specifies that a replant payment will not be paid whether or not replanting is required under the policy.

14. Section 402.4, subsection 8.(a) specifies that if a unit contains acreage to which more than one expected market price applies for a type, variety, class, etc., that the dollar amount of insurance and the dollar amount of production to be counted will be computed separately for each type, variety, class, etc., that have separate expected market prices, and then added together to determine the total liability for the unit.

15. Section 402.4, subsection 8.(b) specifies that if the producer is eligible to receive an indemnity under the Catastrophic Risk Protection Endorsement and is also eligible to receive benefits for the same loss under other USDA programs, the producer must elect the program from which to receive benefits. Only one payment or program benefit will be allowed.

16. Section 402.4, section 9 specifies that if a producer conceals or misrepresents any material fact or commits fraud, the policy will be voided effective with the beginning of the crop year for which such act or omission occurred.

17. Section 402.4, subsection 10.(a) specifies that any option or endorsement which provides additional coverage is not available, except for the Late Planting Agreement Option. Written agreements are not available under the Catastrophic Risk Protection Endorsement.

18. Section 402.4, subsection 10.(b) specifies that hail and fire coverage and land designated by FCIC as high-risk may not be excluded under this Endorsement.

19. Section 402.4, section 11 specifies that a producer must obtain at least catastrophic coverage for each crop of economic significance to be eligible for any price support or production adjustment programs, loans or other USDA provided farm credit, or the Conservation Reserve Program. The requirement that the producer obtain at least catastrophic risk protection will apply to all program benefits obtained after October 13, 1994.

List of Subjects in 7 CFR Part 402

Catastrophic Risk Protection Endorsement, insurance provisions.

Interim Rule

For the reasons set out in the preamble, a part 402 is added to chapter IV of title 7 of CFR, effective for the 1995 and succeeding crop years, to read as follows:

PART 402—CATASTROPHIC RISK PROTECTION ENDORSEMENT

Sec.
402.1 General Statement.
402.2 Applicability
402.3 OMB control numbers
402.4 Catastrophic Risk protection endorsement

Authority: 7 U.S.C. 1506(1).

§ 402.1 General statement.

The Federal Crop Insurance Act as amended by the Federal Crop Insurance Reform Act of 1994 (the ''Act'') requires the Federal Crop Insurance Corporation (''FCIC'') to implement a catastrophic risk protection plan of insurance which

provides a basic level of insurance coverage to protect producers in the event of a FCIC insured or reinsured crop loss due to loss of yield or prevented planting, if the crop loss or prevented planting is due to an insured cause of loss specified in the crop insurance policy. This Catastrophic Risk Protection Endorsement (''Endorsement'') is a continuous endorsement that is effective in conjunction with an applicable crop insurance policy. Catastrophic risk protection coverage will be offered through approved insurance providers and through local offices of the Consolidated Farm Service Agency, USDA.

§ 402.2 Applicability.

This Endorsement is applicable to each crop for which catastrophic risk protection coverage is available and for which the producer elects such coverage. The terms and conditions of the applicable crop insurance policy remain in effect unless they have been modified by this Endorsement.

§ 402.3 OMB control numbers.

The provisions set forth in this interim rule contain new and revised information collections that require clearance by the Office of Management and Budget (OMB) under the Paperwork Reduction Act of 1980 (44 U.S.C. 3501 *et seq.*) and have been previously assigned OMB numbers 0563–0001, 0563–0003, and 0563–0029. These information collection requirements have been submitted to OMB and are not effective until approved by OMB.

§ 402.4 Catastrophic Risk Protection Endorsement Provisions

The Catastrophic Risk Protection Endorsement Provisions for the 1995 and succeeding crop years are as follows:

Department of Agriculture

Federal Crop Insurance Corporation

Catastrophic Risk Protection Endorsement

(This is a continuous endorsement).

You should be aware that additional coverage is available through an approved insurance provider or through local offices of the Consolidated Farm Service Agency, USDA, when such provider is not available.

If a conflict exists between this Endorsement and any of the policies specified in subsection 2.(a) or the Special Provisions for the insured crop, this endorsement will control.

Terms and Conditions

1. Definitions

(a) *Additional coverage*—A plan of crop insurance providing a level of coverage equal to or greater than sixty-five percent (65%) of your approved yield indemnified at one hundred percent (100%) of the expected market price or a comparable coverage as established by FCIC.

(b) *Administrative fee*—The $50 fee the policyholder must pay on a per crop and county basis, with a maximum of $200 per policyholder per county and $600 per policyholder for catastrophic and limited coverage on an annual basis.

(c) *Approved insurance provider*—A private insurance company, including their agents, that has been approved and reinsured by FCIC to provide insurance coverage to producers participating in the Federal crop insurance program.

(d) *Approved yield*—The average amount of production per acre obtained under FCIC's Actual Production History Program (7 CFR Part 400, Subpart G) using production records of the insured or yields assigned by FCIC. At least four crop years of yields must be averaged to obtain the approved yield.

(e) *Catastrophic risk protection*—The minimal level of coverage offered by FCIC, which is required before a person may qualify for certain other United States Department of Agriculture program benefits (see subsections 4. (a) and (b) and subsection 11.(a)).

(f) *CFSA*—The Consolidated Farm Service Agency of the United States Department of Agriculture.

(g) *County*—The county or other political subdivision shown on your accepted application including land in an adjoining county, provided such land is part of a field that extends into the adjoining county and the county boundary is not readily discernable. For peanuts and quota tobacco, the county will also include any land identified by a CFSA farm serial number for the county but physically located in another county.

(h) *Crop of economic significance*—A crop that has either contributed in the previous crop year, or is expected to contribute in the current crop year, ten percent (10%) or more of the total expected value of your share of all crops in which you have an insurable share that are grown in the county. However, notwithstanding the preceding sentence, if the total expected liability under the catastrophic risk protection endorsement is equal to or less than the administrative fee required for the crop, such crop will not be considered a crop of economic significance.

(i) *FCIC*—The Federal Crop Insurance Corporation, a wholly owned Government Corporation within the Consolidated Farm Service Agency, United States Department of Agriculture.

(j) *''Insurance is available''*—Means only those crops for which the crop information is contained in the county actuarial documents.

(k) *Limited coverage*—A plan of insurance offering coverage that is equal to or greater than fifty percent (50%) of your approved yield indemnified at one hundred percent (100%) of the expected market price, or a comparable coverage as established by FCIC but less than sixty-five percent (65%) of your approved yield indemnified at one hundred percent (100%) of the expected market price, or a comparable coverage as established by FCIC.

(l) *Limited resource farmer*—A producer or operator of a small or family farm, including a new producer or operator, with an annual gross income of less than $20,000 derived from all sources of revenue for each of the prior two years and who demonstrates a need to maximize farm income. Notwithstanding the preceding sentence, a producer on a farm of less than 25 acres aggregated for all crops, where the producer derives a majority of the producer's gross income from the farm but the producer's gross income from farming operations does not exceed $20,000, will be considered a limited resource farmer.

(m) *Price election*—In lieu of any provision contained in any other policy document, price election means sixty percent (60%) of the expected market price for the 1995 through 1998 crop years, and fifty-five percent (55%) of the expected market price for the 1999 and subsequent crop years.

(n) *Secretary*—The Secretary of the United States Department of Agriculture.

(o) *Share*—In lieu of any provision contained in any other policy document, your percentage of interest in the insured crop as owner, operator, or tenant at the time coverage begins. However, only for the purpose of determining the amount of indemnity, your share will not exceed your share at the earlier of the time of loss or the beginning of harvest. Unless the accepted application clearly indicates that insurance is requested for a partnership or joint venture, insurance will only cover the crop share of the person completing the application. The share will not extend to any other person having an interest in the crop except as may otherwise be specifically allowed in this endorsement. Any acreage or interest reported by or for your spouse, child or any member of your household may be considered your share. Leases containing provisions for both a cash or minimum payment and a crop share will be considered a crop share lease.

(p) *USDA*—The United States Department of Agriculture.

2. Eligibility, Life of Policy, Cancellation, and Termination

(a) You must have one of the following policies in force to elect this Endorsement and you must have made application for catastrophic risk protection on or before the sales closing date for the crop in the county:

(1) The General Crop Insurance Policy (§ 401.8) and crop endorsement;

(2) The Common Crop Insurance Policy (§ 457.8) and crop provisions;

(3) The Group Risk Plan Policy, if available for catastrophic risk protection; or

(4) A specific named crop insurance policy.

(b) You must be a person as defined in the crop policy to be eligible for catastrophic risk protection coverage.

(c) In addition to the provisions specified in the applicable crop endorsement, crop provision, and crop insurance policy, this Endorsement will terminate for the crop year for which:

(1) You fail to pay the applicable administrative fee as specified in subsections 5.(b) and (c);

(2) You elect to purchase limited or additional coverage for the insured crop; or

(3) The applicable crop policy, to which this endorsement attaches, automatically terminates (e.g. Macadamia Tree and Nut Crop Insurance Policies must be renewed each year).

3. Unit Division

(a) This section is in lieu of the unit provisions specified in the applicable crop endorsement, crop provisions, or crop insurance policy.

(b) For catastrophic risk protection coverage, a unit will be all insurable acreage of the insured crop in the county on the date coverage begins for the crop year:

(1) In which you have one hundred percent (100%) crop share; or

(2) Which is owned by one person and operated by another person on a share basis. (Example: If, in addition to the land you own, you rent land from five landlords, three on a crop share basis and two on a cash basis, you would be entitled to four units, one for each crop share lease and one for the two cash leases and the land you own.)

(c) Land rented for cash, a fixed commodity payment, or any consideration other than a share in the insured crop on such land will be considered as owned by the lessee.

(d) Any unit division other than stated in subsection (b) above is not allowed under this Endorsement.

4. Insurance Guarantees, Coverage Levels, and Prices for Determining Indemnities

(a) Notwithstanding any provision contained in any other policy document, for the 1995 through 1998 crop years, coverage will be equal to fifty percent (50%) of your approved yield indemnified at sixty percent (60%) of the expected market price, or a comparable coverage as established by FCIC.

(b) Notwithstanding any provision contained in any other policy document, for the 1999 and subsequent crop years, coverage will be equal to fifty percent (50%) of your approved yield indemnified at fifty-five percent (55%) of the expected market price, or a comparable coverage as established by FCIC.

(c) If the crop policy utilizes dollar coverage or other alternative methods of coverage, we will convert the dollar coverage or alternative coverage to the amount of coverage that would be available at fifty percent (50%) of your approved yield indemnified at sixty percent (60%) of the expected market price through 1998 and fifty percent (50%) of your approved yield indemnified at fifty-five percent (55%) of the expected market price for subsequent years.

(d) You may elect catastrophic coverage, on a commodity-by-commodity basis, on either an individual yield and loss basis, or an area yield and loss basis, if both options are offered in the Actuarial Table or Special Provisions.

5. Annual Premium and Administrative Fees

(a) Notwithstanding any provision contained in any other policy document, you will not be responsible to pay a premium, nor will the policy be terminated because the premium has not been paid. FCIC will pay a premium subsidy equal to the premium established for the coverage provided under this Endorsement.

(b) In return for catastrophic risk protection, you must pay an administrative fee of $50 per crop per county as follows:

(1) Each type or variety specified in subsections 6.(a) and (b), and crop acreage specified in subsection 6.(c) will be a separate insured crop to which separate administrative fees apply; and

(2) Total administrative fees for all crops insured under any combination of catastrophic coverage and limited coverage will not exceed two hundred dollars ($200) per county and six hundred dollars ($600) for all counties in which you have crops insured.

(c) Administrative fees for catastrophic coverage:

(1) Must be paid to the insurance provider at the time of application (the fee will not be refunded if you file a zero acreage report the crop year for which the application is accepted);

(2) Must be paid annually by the acreage reporting date for the applicable crop for any subsequent crop years that crop insurance is in effect (the fee will not be required if you file a bona fide zero acreage report on or before the acreage reporting date); and

(3) Will be waived for a limited resource farmer (see subsection 1.(l)).

(d) The administrative fee will be refunded if, after applying for catastrophic risk protection and paying the administrative fee, you elect to purchase additional coverage for such crop in the same county on or before the sales closing date. Administrative fees will be refunded only if you have not purchased catastrophic risk protection and limited coverage in excess of the maximum administrative fee to be paid in the applicable situation.

(e) If the administrative fee is not paid at the time of application, or by the acreage reporting date, whichever is applicable, the crop insurance contract will not be in effect for the crop year for which the fee is due and will terminate, and you will not be eligible for certain USDA programs as set out in section 11.

6. Insured Crop

The crop insured is specified in the applicable crop policy documents except as indicated in (a), (b), and (c) below:

(a) You may elect to insure the crop by type, as specified in the applicable policy documents for Stonefruit, Texas Citrus, Florida Citrus, Arizona-California Citrus, Texas Citrus Trees, and Guaranteed Tobacco. These individual crop types will be insured as separate crops.

(b) You may elect to insure your grapes grown in California by variety, as specified in the Special Provisions. These individual crop varieties will be insured as separate crops.

(c) Notwithstanding any other policy provision requiring insurance coverage on all insurable acreage of the crop in the county, if you purchase limited or additional coverage for a crop, you may separately insure acreage that has been designated as high risk land by FCIC, provided that you have executed a high risk land exclusion option under that policy and obtained a catastrophic risk protection policy with the same approved insurance provider. If both policies are in force, that acreage of the crop covered under the limited or additional coverage policy and the acreage covered under the Catastrophic Risk Protection Endorsement will be considered separate crops.

7. Replanting Payment

Notwithstanding any provision contained in any other crop insurance document, no replant payment will be paid whether or not replanting of the crop is required under the policy.

8. Claim for Indemnity

(a) If two or more insured crop types, varieties, or classes are insured within the same unit, and multiple expected market prices are applicable, the dollar amount of insurance and the dollar amount of production to be counted will be determined separately for each type, variety, class, etc., that have separate expected market prices and then added together to determine the total liability for the unit.

(b) If you are eligible to receive an indemnity under this Endorsement, and are also eligible to receive benefits for the same loss under any other USDA program, you must elect the program from which you wish to receive benefits. Only one payment or program benefit will be allowed.

9. Concealment or Fraud

Notwithstanding any provision contained in any other crop insurance document, your policy may be voided on all crops, without waiving any rights, including the right to collect any amounts due:

(a) If at any time you conceal or misrepresent any material fact or commit fraud relating to this or any other contract issued under the authority of the Federal Crop Insurance Act with any insurance provider; and

(b) The voidance will be effective as of the beginning of the crop year with respect to which such act or omission occurred. After the policy has been voided, you must make a new application to obtain catastrophic risk protection coverage for subsequent crop years.

10. Exclusion of Coverage

(a) Options or endorsements which provide additional coverage and which are available under any crop endorsement, crop provision or crop policy offered by FCIC will not be available under this Endorsement, except for the Late Planting Agreement Option. Written agreements are not available for any crop insured under this Endorsement.

(b) Notwithstanding any provision contained in any other crop insurance document, hail and fire coverage and high-risk land may not be excluded for any crop for which this Endorsement is in effect.

11. Eligibility for Other USDA Program Benefits

(a) You must obtain at least the catastrophic risk protection level of coverage for each crop of economic significance in the county in which you have an insurable share, if insurance is available in the county for the crop, to be eligible for:

(1) Price support and production adjustment programs including, but not limited to, those for tobacco, rice, extra long

staple cotton, upland cotton, feed grains, wheat, peanuts, oilseeds, and sugar;

(2) Loans or any other USDA provided farm credit including guaranteed and direct farm ownership loans, operating loans, and emergency loans under the Consolidated Farm and Rural Development Act; and

(3) The Conservation Reserve Program.

(b) The requirement that you obtain catastrophic risk protection will apply to all new and amended applications, contracts and loans obtained after October 13, 1994.

Done in Washington, D.C., on December 21, 1994

Suzette Dittrich,

Acting Manager, Federal Crop Insurance Corporation.

[FR Doc. 95–356 Filed 1–3–95; 3:38 pm]

BILLING CODE 3410–08–U

DEPARTMENT OF TRANSPORTATION

Federal Aviation Administration

14 CFR Part 39

[Docket No. 94–NM–225–AD Amendment 39–9115; AD 95–01–04]

Airworthiness Directives; Boeing Model 747–100 Series Airplanes Equipped With Freighter Conversion Modification Installed in Accordance With Supplemental Type Certificate (STC) SA2322SO

AGENCY: Federal Aviation Administration, DOT.

ACTION: Final rule; request for comments.

SUMMARY: This amendment adopts a new airworthiness directive (AD) that is applicable to certain Boeing Model 747–100 series airplanes. This action requires an inspection to detect discrepancies of the lap joint in certain fuselage stations, repair of any discrepancies, and modification of a certain lap joint. This amendment is prompted by reports of holes in the lap joints and longerons of these airplanes. The actions specified in this AD are intended to prevent reduced fatigue life of the fuselage in the areas in which holes are found.

DATES: Effective January 23, 1995.

The incorporation by reference of certain publications listed in the regulations is approved by the Director of the Federal Register as of January 23, 1995.

Comments for inclusion in the Rules Docket must be received on or before March 7, 1995.

ADDRESSES: Submit comments in triplicate to the Federal Aviation Administration (FAA), Transport Airplane Directorate, ANM–103, Attention: Rules Docket No. 94–NM–225–AD, 1601 Lind Avenue, SW., Renton, Washington 98055–4056.

The service information referenced in this AD may be obtained from GATX/Airlog Company, Tulsa International Airport, P.O. Box 582527, Tulsa, Oklahoma 74158. This information may be examined at the FAA, Transport Airplane Directorate, 1601 Lind Avenue, SW., Renton, Washington; or at the Office of the Federal Register, 800 North Capitol Street, NW., suite 700, Washington, DC.

FOR FURTHER INFORMATION CONTACT: Steven C. Fox, Aerospace Engineer, Airframe Branch, ANM–120S, FAA, Transport Airplane Directorate, Seattle Aircraft Certification Office, 1601 Lind Avenue, SW., Renton, Washington 98055–4056; telephone (206) 227–2777; fax (206) 227–1181.

SUPPLEMENTARY INFORMATION: On July 3, 1990, the FAA issued AD 90–15–06, amendment 39–6653 (55 FR 28600, July 12, 1990), applicable to certain Boeing Model 747 series airplanes, to require inspection to detect cracking and corrosion of the skin lap joints in the fuselage upper lobe, and repair, if necessary. Recently, operators of Model 747–100 series airplanes have reported finding ''hidden'' open fastener holes in the middle row of the lap joint, as well as misdrilled holes, elongated holes, ''figure eight'' holes, and short-edged margins in the fastener holes of the fuselage skin. Additionally, one operator reported finding multiple open, misdrilled, and ''figure eight'' fastener holes in the structural longeron beneath the lap joints. These holes were found during inspections being performed in accordance with AD 90–15–06. In each case, these holes were found on Boeing Model 747–100 series airplanes that had been modified by GATX/Airlog Company in accordance with Supplemental Type Certificate (STC) SA2322SO.

Fastener holes in the lap joint and longeron of the fuselage, if not corrected, could reduce the fatigue life of the fuselage in the affected area.

GATX installed a main deck cargo side door on these airplanes as part of a conversion that reconfigured these airplanes to freighters. The modification includes installation of an external doubler over portions of the lap joint of the fuselage skin at stringer 4L between fuselage stations 1660 and 2040. The installation of the doubler makes it impossible to perform the inspection required by AD 90–15–06 without first removing the doubler to perform the inspection. The modification also entails removal of the original lap joint hat section stringer and replacement with a ''T'' section longeron. This longeron was designed to carry body bending loads around the door structure.

The FAA has reviewed and approved GATX/Airlog Service Bulletin 94–MG–1000–009, dated May 4, 1994, which describes procedures for modification of the longitudinal lap joint in the upper body skin of stringer 4L, at fuselage station (FS) 1689.5 to FS 1741.1, and FS 1961.1 to FS 2010.5. This modification entails removal of two sections of the lap joints in stringer 4L. These lap joints currently are hidden by the modification that was accomplished in accordance with STC SA2322SO. Removal of these sections of the lap joint also constitutes terminating action for the inspections required by AD 90–15–06 for the lap joint section that was removed.

Since an unsafe condition has been identified that is likely to exist or develop on other airplanes of the same type design, this AD is being issued to prevent reduced fatigue life of the fuselage in the area in which holes are found. This AD requires a one-time detailed close visual inspection of the lap joint of stringer 4L from fuselage stations 1660 to 2040 to detect discrepancies (such as corrosion, cracking, open holes, misdrilled holes, and any freeze plugs in the fuselage skin and internal stringer or longerons). Any discrepancy detected must be repaired in accordance with a method approved by the FAA. Additionally, this AD requires that operators submit a report of their findings, positive or negative, to the FAA.

This AD also requires modification of the longitudinal lap joint in the upper body skin of stringer 4L at FS 1689.5 to FS 1741.1, and FS 1961.1 to FS 2010.5. The modification is required to be accomplished in accordance with the service bulletin described previously. Accomplishment of this modification terminates the inspections required by AD 90–15–06 at this location only.

As a result of recent communications with the Air Transport Association (ATA) of America, the FAA has learned that, in general, some operators may misunderstand the legal effect of AD's on airplanes that are identified in the applicability provision of the AD, but that have been altered or repaired in the area addressed by the AD. The FAA points out that all airplanes identified in the applicability provision of an AD are legally subject to the AD. If an airplane has been altered or repaired in the affected area in such a way as to affect compliance with the AD, the owner or operator is required to obtain FAA approval for an alternative method of

compliance with the AD, in accordance with the paragraph of each AD that provides for such approvals. A note has been included in this rule to clarify this requirement.

Since a situation exists that requires the immediate adoption of this regulation, it is found that notice and opportunity for prior public comment hereon are impracticable, and that good cause exists for making this amendment effective in less than 30 days.

Comments Invited

Although this action is in the form of a final rule that involves requirements affecting flight safety and, thus, was not preceded by notice and an opportunity for public comment, comments are invited on this rule. Interested persons are invited to comment on this rule by submitting such written data, views, or arguments as they may desire. Communications shall identify the Rules Docket number and be submitted in triplicate to the address specified under the caption **ADDRESSES**. All communications received on or before the closing date for comments will be considered, and this rule may be amended in light of the comments received. Factual information that supports the commenter's ideas and suggestions is extremely helpful in evaluating the effectiveness of the AD action and determining whether additional rulemaking action would be needed.

Comments are specifically invited on the overall regulatory, economic, environmental, and energy aspects of the rule that might suggest a need to modify the rule. All comments submitted will be available, both before and after the closing date for comments, in the Rules Docket for examination by interested persons. A report that summarizes each FAA-public contact concerned with the substance of this AD will be filed in the Rules Docket.

Commenters wishing the FAA to acknowledge receipt of their comments submitted in response to this rule must submit a self-addressed, stamped postcard on which the following statement is made: ''Comments to Docket Number 94–NM–225–AD.'' The postcard will be date stamped and returned to the commenter.

The regulations adopted herein will not have substantial direct effects on the States, on the relationship between the national government and the States, or on the distribution of power and responsibilities among the various levels of government. Therefore, in accordance with Executive Order 12612, it is determined that this final rule does not have sufficient federalism implications to warrant the preparation of a Federalism Assessment.

The FAA has determined that this regulation is an emergency regulation that must be issued immediately to correct an unsafe condition in aircraft, and that it is not a ''significant regulatory action'' under Executive Order 12866. It has been determined further that this action involves an emergency regulation under DOT Regulatory Policies and Procedures (44 FR 11034, February 26, 1979). If it is determined that this emergency regulation otherwise would be significant under DOT Regulatory Policies and Procedures, a final regulatory evaluation will be prepared and placed in the Rules Docket. A copy of it, if filed, may be obtained from the Rules Docket at the location provided under the caption **ADDRESSES**.

List of Subjects in 14 CFR Part 39

Air transportation, Aircraft, Aviation safety, Incorporation by reference, Safety.

Adoption of the Amendment

Accordingly, pursuant to the authority delegated to me by the Administrator, the Federal Aviation Administration amends part 39 of the Federal Aviation Regulations (14 CFR part 39) as follows:

PART 39—AIRWORTHINESS DIRECTIVES

1. The authority citation for part 39 continues to read as follows:

Authority: 49 U.S.C. App. 1354(a), 1421 and 1423; 49 U.S.C. 106(g); and 14 CFR 11.89.

§ 39.13 [Amended]

2. Section 39.13 is amended by adding the following new airworthiness directive:

95–01–04 Boeing: Amendment 39–9115. Docket 94–NM–225–AD.

Applicability: Model 747–100 series airplanes equipped with freighter conversion modification installed in accordance with Supplemental Type Certificate (STC) SA2322SO, certificated in any category.

Note 1: This AD applies to each airplane identified in the preceding applicability provision, regardless of whether it has been modified, altered, or repaired in the area subject to the requirements of this AD. For airplanes that have been modified, altered, or repaired so that the performance of the requirements of this AD is affected, the owner/operator must use the authority provided in paragraph (d) to request approval from the FAA. This approval may address either no action, if the current configuration eliminates the unsafe condition; or different actions necessary to address the unsafe condition described in this AD. Such a request should include an assessment of the effect of the changed configuration on the unsafe condition addressed by this AD. In no case does the presence of any modification, alteration, or repair remove any airplane from the applicability of this AD.

Compliance: Required as indicated, unless accomplished previously.

To prevent reduced fatigue life of the fuselage, accomplish the following:

(a) Within 90 days after the effective date of this AD, perform a detailed close visual inspection of the tee chord and lap joint of stringer 4L from fuselage station (FS) 1660 to FS 2040 to detect discrepancies (such as corrosion, cracking, open holes, misdrilled holes, and any freeze plugs in the fuselage skin and internal stringer or longerons). External structural doublers must be removed to perform this inspection.

(1) If no discrepancy is detected, prior to further flight, modify the longitudinal lap joints of the upper body skin at stringer 4L at FS 1689.5 to FS 1741.1, and FS 1961.1 to FS 2010.5, in accordance with GATX/Airlog Service Bulletin 94–MG–1000–009, dated May 4, 1994. Accomplishment of this modification constitutes terminating action for the inspections required by AD 90–15–06, amendment 39–6653.

(2) If any discrepancy is detected, prior to further flight, repair in accordance with a method approved by the Manager, Seattle Aircraft Certification Office (ACO), FAA, Transport Airplane Directorate.

(b) Within 30 days after the airplane is returned to service subsequent to the completion of the inspection required by paragraph (a) of this AD, submit a report of the findings of that inspection, positive or negative, to the FAA, Transport Airplane Directorate, Seattle Aircraft Certification Office, 1601 Lind Avenue, SW., Renton, Washington 98055–4056; or fax the report to (206) 227–1181. The report must include the information contained in paragraphs (b)(1), (b)(2), (b)(3), and (b)(4) of this AD. Information collection requirements contained in this regulation have been approved by the Office of Management and Budget (OMB) under the provisions of the Paperwork Reduction Act of 1980 (44 U.S.C. 3501 et seq.) and have been assigned OMB Control Number 2120–0056.

(1) Serial number of the airplane;

(2) Date of completion of the modification installed in accordance with STC SA2322S0;

(3) Date of the last inspection performed in accordance with the requirements of AD 90–15–06, amendment 39–6653; and

(4) Description and location of each discrepancy detected during the inspection required by paragraph (a) of this AD.

(c) As of the effective date of this AD, modification of the longitudinal lap joints of the upper body skin at stringer 4L, FS 1689.5 to FS 1741.1, and FS 1961.1 to FS 2010.5, must be accomplished in accordance with GATX/Airlog Service Bulletin 94–MG–1000–009, dated May 4, 1994, prior to installation of Supplemental Type Certificate (STC) SA2322SO on any airplane in accordance with the STC.

(d) An alternative method of compliance or adjustment of the compliance time that provides an acceptable level of safety may be

used if approved by the Manager, Seattle Aircraft Certification Office (ACO), FAA, Transport Airplane Directorate. Operators shall submit their requests through an appropriate FAA Principal Maintenance Inspector, who may add comments and then send it to the Manager, Seattle ACO.

Note 2: Information concerning the existence of approved alternative methods of compliance with this AD, if any, may be obtained from the Seattle ACO.

(e) Special flight permits may be issued in accordance with sections 21.197 and 21.199 of the Federal Aviation Regulations (14 CFR 21.197 and 21.199) to operate the airplane to a location where the requirements of this AD can be accomplished.

(f) The modification shall be done in accordance with GATX/Airlog Service Bulletin 94–MG–1000–009, dated May 4, 1994. This incorporation by reference was approved by the Director of the Federal Register in accordance with 5 U.S.C. 552(a) and 1 CFR part 51. Copies may be obtained from GATX/Airlog Company, Tulsa International Airport, P.O. Box 582527, Tulsa, Oklahoma 74158. Copies may be inspected at the FAA, Transport Airplane Directorate, 1601 Lind Avenue, SW., Renton, Washington; or at the Office of the Federal Register, 800 North Capitol Street, NW., suite 700, Washington, DC.

(g) This amendment becomes effective on January 23, 1995.

Issued in Renton, Washington, on December 27, 1994.

James V. Devany,

Acting Manager, Transport Airplane Directorate, Aircraft Certification Service.

[FR Doc. 95–283 Filed 1–5–95; 8:45 am]

BILLING CODE 4910–13–U

---

14 CFR Part 71

[Airspace Docket No. 94–AGL–33]

Establishment of Class E Airspace Areas; Moline, IL, Springfield, IL, Grand Rapids, MI, and South Bend, IN

AGENCY: Federal Aviation Administration (FAA), DOT.

ACTION: Final rule.

SUMMARY: This action establishes Class E airspace areas at Quad-City Airport, Moline, IL; Capital Airport, Springfield, IL; Kent County International Airport, Grand Rapids, MI; and Michiana Regional Transportation Center Airport, South Bend, IN. Presently, these areas are designated as Class C airspace when the associated control towers are in operation. However, controlled airspace to the surface is needed when the control towers located at these airports are closed. The intended effect of this action is to provide adequate Class E airspace for instrument flight rule (IFR) operations when these control towers are closed.

EFFECTIVE DATE: 0901 UTC, March 30, 1995.

FOR FURTHER INFORMATION CONTACT: Jeffrey L. Griffith, Air Traffic Division, System Management Branch, AGL–530, Federal Aviation Administration, 2300 East Devon Avenue, Des Plaines, Illinois 60018, telephone (708) 294–7568.

SUPPLEMENTARY INFORMATION:

History

On November 30, 1994, the FAA proposed to amend part 71 of the Federal Aviation Regulations (14 CFR part 71) to establish Class E airspace areas at Moline, IL, Springfield, IL, Grand Rapids, MI, South Bend, IN (59 FR 61299). Interested parties were invited to participate in this rulemaking proceeding by submitting written comments on the proposal to the FAA. No comments objecting to the proposal were received.

The coordinates for this airspace docket are based on North American Datum 83. Class E airspace designations are published in Paragraph 6002 of FAA Order 7400.9B dated July 18, 1994, and effective September 16, 1994, which is incorporated by reference in 14 CFR 71.1. The Class E airspace designations listed in this document will be published subsequently in the Order.

The Rule

This amendment to part 71 of the Federal Aviation Regulations establishes Class E airspace areas at Moline, IL, Springfield, IL, Grand Rapids, MI, and South Bend, IN. Currently these airspace areas are designated as Class C when the associated control towers are in operation. However, controlled airspace to the surface is needed for IFR operations at Quad-City Airport, Moline, IL; Capital Airport, Springfield, IL; Kent County International Airport, Grand Rapids, MI; and Michiana Regional Transportation Center Airport, South Bend, IN, when the control towers are closed. The intended effect of this action is to provide adequate Class E airspace for IFR operations at these airports when these control towers are closed.

The FAA has determined that this regulation only involves an established body of technical regulations for which frequent and routine amendments are necessary to keep them operationally current. It, therefore—(1) is not a ''significant regulatory action'' under Executive Order 12866; (2) is not a ''significant rule'' under DOT Regulatory Policies and Procedures (44 FR 11034; February 26, 1979); and (3) does not warrant preparation of a regulatory evaluation as the anticipated impact is so minimal. Since this is a routine matter that will only affect air traffic procedures and air navigation, it is certified that this rule will not have a significant economic impact on a substantial number of small entities under the criteria of the Regulatory Flexibility Act.

List of Subjects in 14 CFR Part 71

Airspace, Incorporation by reference, Navigation (air).

Adoption of the Amendment

In consideration of the foregoing, the Federal Aviation Administration amends 14 CFR part 71 as follows:

PART 71—[AMENDED]

1. The authority citation for 14 CFR part 71 continues to read as follows:

Authority: 49 U.S.C. app. 1348(a), 1354(a), 1510; E.O. 10854, 24 FR 9565, 3 CFR, 1959–1963 Comp., p. 389; 49 U.S.C. 106(g); 14 CFR 11.69.

§ 71.1 [Amended]

2. The incorporation by reference in 14 CFR 71.1 of the Federal Aviation Administration Order 7400.9B, Airspace Designations and Reporting Points, dated July 18, 1994, and effective September 16, 1994, is amended as follows:

Paragraph 6002 Class E airspace areas designated as a surface area for an airport.

* * * * *

AGL IL E2 Moline, IL [New]

Moline, Quad-City Airport, IL
(Lat. 41°26′56″ N., long. 90°30′24″ W.)

Within a 5-mile radius of the Quad-City Airport. This Class E airspace area is effective during the specific dates and times established in advance by a Notice to Airmen. The effective dates and times will thereafter be continuously published in the Airport/Facility Directory.

* * * * *

AGL IL E2 Springfield, IL [New]

Springfield, Capital Airport, IL
(Lat. 39°50′38″ N., long. 89°40′39″ W.)

Within a 5-mile radius of the Capital Airport. This Class E airspace area is effective during the specific dates and times established in advance by a Notice to Airmen. The effective dates and times will thereafter be continuously published in the Airport/Facility Directory.

* * * * *

AGL MI E2 Grand Rapids, MI [New]

Grand Rapids, Kent County International Airport, MI
(Lat. 42°52′58″ N., long. 85°31′26″ W.)

Within a 5-mile radius of the Kent County International Airport. This Class E airspace area is effective during the specific dates and times established in advance by a Notice to Airmen. The effective dates and times will

thereafter be continuously published in the Airport/Facility Directory.

* * * * *

AGL IN E2 South Bend, IN [New]

South Bend, Michiana Regional Transportation Center Airport, IN
(Lat. 41°42′32″ N., long. 86°19′07″ W.)

Within a 5-mile radius of the Michiana Regional Airport, excluding that airspace within a 1-mile radius of the Chain-O-Lakes Airport, and excluding that airspace 1 mile either side of the 214° bearing from the Chain-O-Lakes Airport to the 5-mile radius of the Michiana Regional Airport. This Class E airspace area is effective during the specific dates and times established in advance by a Notice to Airmen. The effective dates and times will thereafter be continuously published in the Airport/Facility Directory.

* * * * *

Issued in Des Plaines, Illinois on December 20, 1994.

Maureen Woods,

Acting Manager, Air Traffic Division.

[FR Doc. 95–353 Filed 1–5–95; 8:45 am]

BILLING CODE 4910–13–M

---

14 CFR Part 71

[Airspace Docket No. 94–AEA–01]

Modification of Class E Airspace; New York, NY

AGENCY: Federal Aviation Administration (FAA), DOT.

ACTION: Final rule.

SUMMARY: This action modifies Class E airspace to accommodate a standard instrument approach procedure (SIAP) for the Teterboro, NJ Airport, for aircraft operating under instrument flight rules (IFR).

EFFECTIVE DATE: 0901 U.T.C. March 30, 1995.

FOR FURTHER INFORMATION CONTACT: Frank Jordan, Designated Airspace Specialist, System Management Branch, AEA–530, F.A.A. Eastern Region, Fitzgerald Federal Building #111, John F. Kennedy International Airport, Jamaica, New York 11430; telephone: (718) 553–0857.

SUPPLEMENTARY INFORMATION:

History

On August 22, 1994, the FAA proposed to amend part 71 of the Federal Aviation Regulations (14 CFR part 71) to revise Class E Airspace in the vicinity of New York, NY (59 FR 46206). The proposal would establish additional controlled airspace extending upward from 700 feet above the surface of the earth for IFR procedures at the Teterboro, NJ, Airport.

Interested parties were invited to participate in this rulemaking proceeding by submitting written comments on the proposal to the FAA. One comment was submitted concurring with the proposal.

Airspace Reclassification, in effect as of September 16, 1993, has discontinued the use of the term ''Transition Area,'' and certain controlled airspace extending upward from 700 feet or more above the surface of the earth is now Class E airspace. Except for editorial changes, this amendment is the same as that proposed in the notice. The coordinates for this airspace docket are based on North American Datum 83. Class E airspace designations are published in Paragraph 6005 of FAA Order 7400.9B, Airspace Designations and Reporting Points, dated July 18, 1994, and effective September 16, 1994, which is incorporated by reference in 14 CFR 71.1. The Class E airspace designation listed in this document will be published subsequently in the Order.

The Rule

This amendment to part 71 of the Federal Aviation Regulations revises Class E airspace in the vicinity of New York, NY, for aircraft utilizing SIAPS at the Teterboro, NJ, Airport.

The FAA has determined that this regulation only involves an established body of technical regulations for which frequent and routine amendments are necessary to keep them operationally current. Therefore, this regulation: (1) is not a ''significant regulatory action'' under Executive Order 12866; (2) is not a ''significant rule'' under DOT Regulatory Policies and Procedures (44 FR 11034; February 26, 1979); and (3) does not warrant preparation of a regulatory evaluation as the anticipated impact is so minimal. Since this is a routine matter that will only affect air traffic procedures and air navigation, it is certified that this rule will not have a significant economic impact on a substantial number of small entities under the criteria of the Regulatory Flexibility Act.

List of Subjects in 14 CFR Part 71

Airspace, Incorporation by reference, Navigation (air).

Adoption of the Amendment

In consideration of the foregoing, the Federal Aviation Administration amends 14 CFR part 71 as follows:

PART 71—[AMENDED]

1. The authority citation for part 71 continues to read as follows:

Authority: 49 U.S.C. app. 1348(a), 1354(a), 1510; E.O. 10854, 24 FR 9565, 3 CFR, 1959–1963 Comp., p. 389; 49 U.S.C. 106(g); 14 CFR 11.69.

§ 71.1 [Amended]

2. The incorporation by reference in 14 CFR 71.1 of the Federal Aviation Administration Order 7400.9B, Airspace Designations and Reporting Points, dated July 18, 1994, and effective September 16, 1994, is amended as follows:

Paragraph 6005—Class E airspace areas extending upward from 700 feet or more above the surface of the earth

* * * * *

AEA NY E5 New York, NY [Revised]

John F. Kennedy International Airport, New York, NY
(Lat. 40°38′25″N., long. 73°46′40″W.)
Canarsie VOR/DME
(Lat. 40°36′45″N., long. 73°53′40″W.)
LaGuardia Airport, New York, NY
(Lat. 40°46′38″N., long. 73°52′21″W.)
LaGuardia VOR/DME
(Lat. 40°47′01″N., long. 73°52′06″W.)
Teterboro Airport, NJ
(Lat. 40°51′00″N., long. 74°03′40″W.)
Newark International Airport, NJ
(Lat. 40°41′34″N., long. 74°10′07″W.)
Morristown Municipal Airport, NJ
(Lat. 40°47′57″N., long. 74°24′54″W.)
Chatham NDB
(Lat. 40°44′27″N., long. 74°25′48″W.)
Essex County Airport, Caldwell, NJ
(Lat. 40°52′30″N., long. 74°16′53″W.)
MOREE LOM
(Lat. 40°52′47″N., long. 74°20′04″W.)
Paterson NDB
(Lat. 40°56′47″N., long. 74°09′04″W.)

That airspace extending upward from 700 feet above the surface within a 7.9-mile radius of John F. Kennedy International Airport and within 2.7 miles each side of the Canarsie VOR/DME 212° radial, extending from the Canarsie VOR/DME to 3.5 miles southwest of the VOR and within a 6.9-mile radius of LaGuardia Airport and within 3.1 miles each side of the LaGuardia VOR/DME 035° radial extending from the LaGuardia VOR/DME to 8.1 miles northeast of the LaGuardia VOR/DME and within a 6.7-mile radius of Teterboro Airport and within 3 miles either side of a 048° (T) 061° (M) bearing from the northeast end of a northeast to southwest runway at Teterboro Airport extending from the 6.7-mile radius area to 10 miles northeast of the northeast end of the runway and within a 7-mile radius of Newark International Airport and within a 6.6-mile radius of Morristown Municipal Airport and within 8 miles northwest and 4 miles southeast of a 204° bearing from the Chatham NDB extending from the Chatham NDB to 16 miles southwest of the NDB and within a 6.6-mile radius of Essex County Airport and within 4 miles north and 8 miles south of a 276° bearing from the MOREE LOM extending from the MOREE LOM to 16 miles west of the LOM and within 8 miles northwest and 4 miles southeast of a 057° bearing from the Paterson NDB extending from the Paterson NDB to 16 miles northeast of the NDB.

* * * * *

Issued in Jamaica, New York, on December 20, 1994.

John S. Walker,

Manager, Air Traffic Division.

[FR Doc. 95–354 Filed 1–5–95; 8:45 am]

BILLING CODE 4910–13–M

14 CFR Part 71

[Airspace Docket No. 94–AEA–04]

Establishment of Class E Airspace; Islip, NY

AGENCY: Federal Aviation Administration (FAA), DOT.

ACTION: Final rule.

SUMMARY: This action establishes additional controlled airspace extending upward from the surface at the Long Island MacArthur Airport, Islip, NY, during the hours that the Air Traffic Control Tower (ATCT) is not in operation in order to accommodate aircraft operating under instrument flight rules. Additionally, a minor technical correction is being made to the legal description from that proposed in the original notice, to reflect the operational hours associated with this airspace area.

EFFECTIVE DATE: 0901 U.T.C. March 30, 1995.

FOR FURTHER INFORMATION CONTACT: Frank Jordan, Designated Airspace Specialist, System Management Branch, AEA–530, F.A.A. Eastern Region, Fitzgerald Federal Building # 111, John F. Kennedy International Airport, Jamaica, New York 11430; telephone: (718) 553–0857.

SUPPLEMENTARY INFORMATION:

History

On August 22, 1994, the FAA proposed to amend part 71 of the Federal Aviation Regulations (14 CFR part 71) to establish Class E Airspace at Islip, New York, when the associated ATCT is not in operation (59 FR 46364). The proposal would establish additional-controlled airspace extending upward from the surface of the earth to accommodate aircraft operations conducted under instrument flight rules.

Interested parties were invited to participate in this rulemaking proceeding by submitting written comments on the proposal to the FAA. No comments were received on the proposal.

Airspace Reclassification, in effect as of September 16, 1993, has discontinued the use of the term ''Control Zone,'' and airspace designated as a surface area for an airport is now Class E airspace. Except for editorial changes, this amendment is the same as that proposed in the notice. The coordinates for this airspace docket are based on North American Datum 83. Class E airspace designations for areas designated as a surface area for an airport are published in Paragraph 6002 of FAA Order 7400.9B, Airspace Designations and Reporting Points, dated July 18, 1994, and effective September 16, 1994, which is Incorporated by reference in 14 CFR 71.1. The Class E airspace designation listed in this document will be published subsequently in the Order.

The Rule

This amendment to Part 71 of the Federal Aviation Regulations establishes Class E Airspace at Islip, New York, when the associated ATCT is not in operation to accommodate aircraft operations conducted under instrument flight rules.

The FAA has determined that this regulation only involves an established body of technical regulations for which frequent and routine amendments are necessary to keep them operationally current. Therefore, this regulation: (1) Is not a ''Significant Regulatory Action'' under Executive Order 12866; (2) is not a ''significant rule'' under DOT Regulatory Policies and Procedures (44 FR 11034; February 26, 1979); and (3) does not warrant preparation of a regulatory evaluation as the anticipated impact is so minimal. Since this is a routine matter that will only affect air traffic procedures and air navigation, it is certified that this rule will not have a significant economic impact on a substantial number of small entities under the criteria of the Regulatory Flexibility Act.

List of Subjects in 14 CFR Part 71

Airspace, Incorporation by reference, Navigation (air).

Adoption of the Amendment

In consideration of the foregoing, the Federal Aviation Administration amends 14 CFR part 71 as follows:

PART 71—[AMENDED]

1. The authority citation for part 71 continues to read as follows:

Authority: 49 U.S.C. app. 1348(a), 1354(a), 1510; E.O. 10854, 24 FR 9596, 3 CFR, 1959–1963 Comp., p. 389; 49 U.S.C. 106(g); 14 CFR 11.69.

§ 71.1 [Amended]

2. The incorporation by reference in 14 CFR 71.1 of the Federal Aviation Administration Order 7400.9B, Airspace Designations and Reporting Points, dated July 18, 1994, and effective September 16, 1994, is amended as follows:

Paragraph 6002—Class E airspace areas designated as a surface area an airport

* * * * *

AEA NY E2 Long Island MacArthur Airport, Islip, NY [NEW]

Long Island MacArthur Airport
(Lat. 40°47′44″N., long. 73°05′58″W.)

Bayport Aerodrome
(Lat. 40°45′30″N., long. 73°03′13″W.)

Within a 5-mile radius of the Long Island MacArthur Airport, excluding that airspace from the surface to but not including 700 feet MSL within 1 mile west of Bayport Aerodrome and parallel to Runway 18/36 from south of the Sunrise Highway southbound to the 5-mile radius of the Long Island MacArthur Airport, counterclockwise to south of Nichols Road thence northbound along Nichols Road to south of and parallel to the Sunrise Highway westbound to the beginning point. This Class E airspace area is effective during the specific dates and times established in advance by a Notice to Airmen. The effective date and time will thereafter be continuously published in the Airport/Facility Directory.

* * * * *

Issued in Jamaica, New York, on December 20, 1994.

John S. Walker,

Manager, Air Traffic Division.

[FR Doc. 95–352 Filed 1–5–95; 8:45 am]

BILLING CODE 4910–13–M

14 CFR Part 97

[Docket No. 28009; Amdt. No. 1641]

Standard Instrument Approach Procedures; Miscellaneous Amendments

AGENCY: Federal Aviation Administration (FAA), DOT.

ACTION: Final rule.

SUMMARY: This amendment establishes, amends, suspends, or revokes Standard Instrument Approach Procedures (SIAPs) for operations at certain airports. These regulatory actions are needed because of changes occurring in the National Airspace System, such as the commissioning of new navigational facilities, addition of new obstacles, or changes in air traffic requirements. These changes are designed to provide safe and efficient use of the navigable airspace and to promote safe flight operations under instrument flight rules at the affected airports.

DATES: An effective date for each SIAP is specified in the amendatory provisions.

Incorporation by reference-approved by the Director of the Federal Register on December 31, 1980, and reapproved as of January 1, 1982.

ADDRESSES: Availability of matter incorporated by reference in the amendment is as follows:

For Examination—

1. FAA Rules Docket, FAA Headquarters Building, 800 Independence Avenue, SW., Washington, DC 20591;
2. The FAA Regional Office of the region in which affected airport is located; or
3. The Flight Inspection Area Office which originated the SIAP.

For Purchase—Individual SIAP copies may be obtained from:

1. FAA Public Inquiry Center (APA–200), FAA Headquarters Building, 800 Independence Avenue, SW., Washington, DC 20591; or
2. The FAA Regional Office of the region in which the affected airport is located.

By Subscription—Copies of all SIAPs, mailed once every 2 weeks, are for sale by the Superintendent of Documents, U.S. Government Printing Office, Washington, DC 20402.

FOR FURTHER INFORMATION CONTACT: Paul J. Best, Flight Procedures Standards Branch (AFS–420), Technical Programs Division, Flight Standards Service, Federal Aviation Administration, 800 Independence Avenue, SW., Washington, DC 20591; telephone (202) 267–8277.

SUPPLEMENTARY INFORMATION: This amendment to part 97 of the Federal Aviation Regulations (14 CFR part 97) establishes, amends, suspends, or revokes Standard Instrument Approach Procedures (SIAPs). The complete regulatory description on each SIAP is contained in the appropriate FAA Form 8260 and the National Flight Data Center (FDC)/Permanent (P) Notices to Airmen (NOTAM) which are incorporated by reference in the amendment under 5 U.S.C. 552(a), 1 CFR part 51, and § 97.20 of the Federal Aviations Regulations (FAR). Materials incorporated by reference are available for examination or purchase as stated above.

The large number of SIAPs, their complex nature, and the need for a special format make their verbatim publication in the **Federal Register** expensive and impractical. Further, airmen do not use the regulatory text of the SIAPs, but refer to their graphic depiction of charts printed by publishers of aeronautical materials. Thus, the advantages of incorporation by reference are realized and publication of the complete description of each SIAP contained in FAA form documents is unnecessary. The provision of this amendment state the affected CFR (and FAR) sections, with the types and effective dates of the SIAPs. This amendment also identifies the airport, its location, the procedure identification and the amendment number.

The Rule

This amendment to part 97 of the Federal Aviation Regulations (14 CFR part 97) establishes, amends, suspends, or revokes SIAPs. For safety and timeliness of change considerations, this amendment incorporates only specific changes contained in the content of the following FDC/P NOTAM for each SIAP. The SIAP information in some previously designated FDC/Temporary (FDC/T) NOTAMs is of such duration as to be permanent. With conversion to FDC/P NOTAMs, the respective FDC/T NOTAMs have been cancelled.

The FDC/P NOTAMs for the SIAPs contained in this amendment are based on the criteria contained in the U.S. Standard for Terminal Instrument Approach Procedures (TERPS). In developing these chart changes to SIAPs by FDC/P NOTAMs, the TERPS criteria were applied to only these specific conditions existing at the affected airports. All SIAP amendments in this rule have been previously issued by the FAA in a National Flight Data Center (FDC) Notice to Airmen (NOTAM) as an emergency action of immediate flight safety relating directly to published aeronautical charts. The circumstances which created the need for all these SIAP amendments requires making them effective in less than 30 days.

Further, the SIAPs contained in this amendment are based on the criteria contained in the TERPS. Because of the close and immediate relationship between these SIAPs and safety in air commerce, I find that notice and public procedure before adopting these SIAPs are unnecessary, impracticable, and contrary to the public interest and, where applicable, that good cause exists for making these SIAPs effective in less than 30 days.

Conclusion

The FAA has determined that this regulation only involves an established body of technical regulations for which frequent and routine amendments are necessary to keep them operationally current. It, therefore—(1) is not a ''significant regulatory action'' under Executive Order 12866; (2) is not a ''significant rule'' under DOT Regulatory Policies and Procedures (44 FR 11034; February 26, 1979); and (3) does not warrant preparation of a regulatory evaluation as the anticipated impact is so minimal. For the same reason, the FAA certifies that this amendment will not have a significant economic impact on a substantial number of small entities under the criteria of the Regulatory Flexibility Act.

List of Subjects in 14 CFR Part 97

Air Traffic Control, Airports, Navigation (Air).

Issued in Washington, DC, on December 16, 1994.

Thomas C. Accardi,

Director, Flight Standards Service.

Adoption of the Amendment

Accordingly, pursuant to the authority delegated to me, part 97 of the Federal Aviation Regulations (14 CFR part 97) is amended by establishing, amending, suspending, or revoking Standard Instrument Approach Procedures, effective at 0901 UTC on the dates specified, as follows:

PART 97—STANDARD INSTRUMENT APPROACH PROCEDURES

1. The authority citation for part 97 continues to read as follows:

Authority: 49 U.S.C. app. 1348, 1354(a), 1421 and 1510; 49 U.S.C. 106(g); and 14 CFR 11.49(b)(2).

2. Part 97 is amended to read as follows:

§§ 97.23, 97.25, 97.27, 97.29, 97.31, 97.33, 97.35 [Amended]

By amending: § 97.23 VOR, VOR/DME, VOR or TACAN, and VOR/DME or TACAN; § 97.25 LOC, LOC/DME, LDA, LDA/DME, SDF, SDF/DME; § 97.27 NDB, NDB/DME; § 97.29 ILS, ILS/DME, ISMLS, MLS, MLS/DME, MLS/RNAV; § 97.31 RADAR SIAPs; § 97.33 RNAV SIAPs; and § 97.35 COPTER SIAPs, identified as follows:

* * * *Effective Upon Publication*

FDC date	State	City	Airport	FDC No.	SIAP
11/30/94 ...	PA	Harrisburg	Capital City	FDC 4/6737	ILS Rwy 8 Amdt 10A.
12/02/94 ...	NE	North Platte	North Platte Regional	FDC 4/6750	VOR OR GPS Rwy 35, Amdt 17.
12/02/94 ...	NE	North Platte	North Platte Regional	FDC 4/6751	ILS Rwy 30R, Amdt 5.
12/07/94 ...	MN	Maple Lake	Maple Lake Muni	FDC 4/6821	VOR–A Amdt 2.
12/07/94 ...	OH	Cincinnati	Cincinnati-Blue Ash	FDC 4/6820	NDB OR GPS Rwy 6 ORIG.
12/08/94 ...	OR	Salem	Salem/McNary Field	FDC 4/6822	NDB Rwy 31, Amdt 18.
12/08/94 ...	OR	Salem	Salem/McNary Field	FDC 4/6823	LOC BC Rwy 12, Amdt 6.
12/08/94 ...	OR	Salem	Salem/McNary Field	FDC 4/6824	ILS Rwy 31, Amdt 27.
12/08/94 ...	OR	Salem	Salem/McNary Field	FDC 4/6825	LOC/DME Rwy 31, Amdt 2.
12/09/94 ...	HI	Kahului	Kahului	FDC 4/6875	ILS Rwy 2 Amdt 22.
12/12/94 ...	WY	Jackson	Jackson Hole	FDC 4/6904	VOR OR GPS–A, Amdt 6A.
12/12/94 ...	WY	Jackson	Jackson Hole	FDC 4/6905	VOR/DME OR GPS Rwy 36, Amdt 4.
12/13/94 ...	AK	Ketchikan	Ketchikan Intl	FDC 4/6916	ILS/DME–1, Rwy 11, Amdt 5C.
12/14/94 ...	CT	New Haven	Tweed-New Haven	FDC 4/6944	ILS Rwy 2 Amdt 15.

[FR Doc. 95–355 Filed 1–5–95; 8:45 am]
BILLING CODE 4910–13–M

DEPARTMENT OF ENERGY

Federal Energy Regulatory Commission

18 CFR Parts 154, 157, 270, 271, 272, 273, 274 and 275

[Docket No. RM94–18–002; Order No. 567–B]

Removal of Outdated Regulations Pertaining to the Sales of Natural Gas Production

Issued December 15, 1994.

AGENCY: Federal Energy Regulatory Commission; DOE.

ACTION: Final rule; order on rehearing.

SUMMARY: The Federal Energy Regulatory Commission (Commission) is issuing an order on rehearing concerning the deletion of a section of the Commission's regulations implementing the Natural Gas Policy Act (NGPA). That section provided that any sale by an affiliate of an interstate pipeline, intrastate pipeline, or local distribution company (LDC) is a first sale under the NGPA unless the Commission determines not to treat it as such. The Commission finds that Congress eliminated the only statutory basis for defining pipeline and LDC affiliate marketers as first sellers and reaffirms the Commission's finding that, with the decontrol of wellhead pricing, no purpose is any longer served by the anti-circumvention rule deleted by the Commission's previous order.

EFFECTIVE DATE: December 15, 1994.

FOR FURTHER INFORMATION CONTACT: Sandra Elliott, Office of the General Counsel, Federal Energy Regulatory Commission, 825 North Capitol Street, NE, Washington, DC 20426, (202) 208–0694.

SUPPLEMENTARY INFORMATION: In addition to publishing the full text of this document in the **Federal Register**, the Commission also provides all interested persons an opportunity to inspect or copy the contents of this document during normal business hours in Room 3308, 941 North Capitol Street, N.E., Washington, D.C. 20426.

The Commission Issuance Posting System (CIPS), an electronic bulletin board service, provides access to the texts of formal documents issued by the Commission. CIPS is available at no charge to the user and may be accessed using a personal computer with a modem by dialing (202) 208–1397. To access CIPS, set your communications software to 19200, 14400, 12000, 9600, 7200, 4800, 2400, 1200 or 300bps, full duplex, no parity, 8 data bits, and 1 stop bit. The full text of this document will be available on CIPS for 60 days from the date of issuance in ASCII and WordPerfect 5.1 format. After 60 days the document will be archived, but still accessible. The complete text on diskette in WordPerfect format may also be purchased from the Commission's copy contractor, La Dorn Systems Corporation, also located in Room 3308, 941 North Capitol Street, N.E., Washington, D.C. 20426.

Before Commissioners: Elizabeth Anne Moler, Chair; Vicky A. Bailey, James J. Hoecker, William L. Massey, and Donald F. Santa, Jr.

Order on Rehearing

I. Introduction

This order addresses requests for rehearing or reconsideration of the Commission's October 17, 1994 order [1] on rehearing issued in the above referenced proceeding. The October 17, 1994 order denied rehearing of the Commission's July 28, 1994 final rule (Order No. 567),[2] which, in pertinent part, deleted section 270.203(c) of the Commission's regulations implementing the NGPA. That section provided that any sale by an affiliate of an interstate pipeline, intrastate pipeline, or local distribution company (LDC) is a first sale under the NGPA unless the Commission determines not to treat it as such. Enron Capital & Trade Resources Corporation (Enron), Coastal Gas Marketing Company (Coastal), and Designated Parties request rehearing.[3] The petitioners argue that the Commission erred and should reinstate section 270.203(c). For the reasons discussed below and in the October 17, 1994 order, the Commission denies rehearing and reconsideration.

II. Background

The Natural Gas Wellhead Decontrol Act of 1989 (Decontrol Act) eliminated

[1] 69 FERC ¶ 61,055 (1994).

[2] Removal of Outdated Regulations Pertaining to the Sales of Natural Gas Production, 59 FR 40,240 (August 8, 1994), III FERC Stats. & Regs. Preambles ¶ 30,999 (July 28, 1994).

[3] The Designated Parties consist of Amoco Energy & Trading Corp.; Aquila Energy Marketing Corp.; Chevron U.S.A., Inc.; Hadson Gas Systems, Inc.; Heartland Energy Services, Inc.; Natural Gas Clearinghouse; O&R Energy, Inc.; and Texaco, Inc.

as of January 1, 1993, all maximum lawful prices for first sales of natural gas. Order No. 567 removed from the Commission's regulations various regulations that the Commission considered obsolete or nonessential in light of the decontrol of first sale prices. These included the § 270.203(c) definition of a first sale. On October 17, 1994, the Commission issued the subject order which denied rehearing of Order No. 567.

In the October 17, 1994 order, on rehearing of Order No. 567, in response to objections directed at the removal of § 270.203(c), the Commission upheld its action, finding that, in light of wellhead decontrol, no purpose would be served by § 270.203(c). That section was originally adopted pursuant to the Commission's authority under NGPA section 2(21)(A)(v) to define, as a first sale, any sale that does not otherwise qualify under NGPA section 2(21) as a first sale ''in order to prevent circumvention of any maximum lawful price established under this Act.'' The Commission held that circumvention of maximum lawful prices cannot be a concern when there are no maximum lawful prices to circumvent. The Commission also found that the removal of that section had no substantive impact on the rights of the parties since, at present, there is no practical difference between operating under the blanket marketer sales certificate (to which affiliated marketers may became subject as a result of the removal of that section [4]) and treatment as a nonjurisdictional first seller. Finally, the Commission rejected arguments that the Commission violated the Administrative Procedures Act's (APA) notice and comment requirements.

III. Arguments on Rehearing

On rehearing, Enron first asserts that, by retaining NGA jurisdiction over affiliate sales, the Commission is acting in contravention of its own pro-marketing policies as well as those of Congress stated in the Wellhead Decontrol Act. Enron asserts that the Commission appears to acknowledge only that its action will affect interstate pipeline affiliates, whereas it also affects marketing affiliates of intrastate pipelines and LDCs. Further, it argues that this returns to the bifurcated system of jurisdiction of sales for resale, but not of direct sales, that led to gas shortages in the 1970's. Further, it asserts that the legislative history of the Wellhead Decontrol Act is rife with statements that indicate Congress' intent to remove all vestiges of natural gas price control. It asserts that Congress only intended to continue NGA jurisdiction of interstate pipelines and, in response to the reasoning of the October 17, 1994 order, queries of what purpose will be served by continuing the appearance of regulation, rather than meaningful regulation. Second, Enron asserts that nonjurisdictional marketers have a competitive advantage over marketing affiliates who make sales for resale in interstate commerce, because marketing affiliates are subject to regulatory uncertainty. It submits that this uncertainty increases market risks and impedes the ability of marketing affiliates to obtain financing and plan transactions. Finally, Enron argues that the substantive impact of the removal of § 270.203(c) required the Commission to give parties advance notice and the opportunity to comment under the APA. It maintains that the Commission has broad rulemaking authority under section 501 of the NGPA to reinstate section 270.203(c).

In their request for rehearing, in addition to a number of arguments similar to those made by Enron, Designated Parties contest the Commission's position that the change to light-handed regulation has no substantive impact on the rights of the parties. They assert that regulation diminishes the attractiveness of natural gas as a fuel for power generation projects because regulation may adversely affect the availability or cost of financing such projects. They assert that regulation tends to adversely affect the ability of parties ''to monetize the asset represented by accounts receivable under long-term supply agreements'' due to the risk of changes in contract pricing or other terms pursuant to the Commission's NGA section 5 authority. They assert, like Enron, that regulation resurrects the bifurcated regulation/non-regulation system and allegedly gives nonjurisdictional marketers an advantage. Finally, they assert that, in certain cases,[5] some intrastate pipelines may lose their non-jurisdictional status under Title IV of the NGPA as a result of the Commission's action which may have a ''ripple'' effect as intrastate entities take contractual action to protect themselves from regulation. Finally, they argue that the Commission has failed to recognize that Title VI of the NGPA coordinates the NGA and NGPA and defines the boundaries of the Commission's jurisdiction, contrary to the Commission's ruling.

Designated Parties also allege that the Commission violated APA and NGPA notice and comment requirements by leaving the parties to seek rehearing. They argue that Order No. 567 gave no notice of the reasoning behind the elimination of the regulation and, hence, this rehearing is the first real opportunity the parties have had to respond to the Commission's order. They argue that the Commission failed to adequately justify its finding of ''good cause'' to dispense with the APA procedures for the reason that the instant situation does not fall into the kind of situations where action is required immediately. Further, they assert that the Commission's finding that the APA procedures were unnecessary was in error for the same reason, as asserted above, that the Commission's action did have a substantive effect on the parties. They also observe that section 502(b) of the NGPA provides that an opportunity for oral presentations is to be made available ''to the maximum extent practicable.'' Accordingly, they ask that the Commission stay the effect of its order and institute new rulemaking procedures on this issue.

Coastal contends that the Commission erred in finding no substantive effect of its decision and in failing to provide notice and comment. It asserts that the number of comments might have been greater than those received on rehearing had the Commission not issued a final rule at the outset.

IV. Discussion

For the reasons discussed below and in the October 17, 1994 order, the Commission finds that the petitioners have raised no new arguments that warrant any change in the Commission's action on this issue. Accordingly, the Commission denies the requests for rehearing or reconsideration.

A. The Authority of the Commission To Define First Sales

The Commission continues to believe that the deletion of § 270.203(c) was appropriate for the reasons stated in the October 17, 1994 order. The Decontrol Act has eliminated all maximum lawful prices applicable to first sales. As we observed in our October 17, 1994 order, no purpose is served any longer by our exercising our authority under NGPA section 2(21)(A)(v) to define additional categories of sales as first sales ''in order to prevent circumvention of any maximum lawful price established

[4] Pipeline and LDC marketing affiliates only become subject to the blanket certificate to the extent they sell natural gas for resale in interstate commerce. Thus, a direct sale or a sale in intrastate commerce would not be covered by the blanket certificate since the Natural Gas Act does not otherwise apply to such sales.

[5] Citing Westar Transmission Co., 43 FERC ¶ 61,050 (1988) and Texas Utilities Fuel Co., 44 FERC ¶ 61,171 (1988).

under this Act.'' The rehearing petitioners have not disputed our finding that circumvention of maximum lawful prices cannot be a concern when there are no maximum lawful prices to circumvent. The Commission would exceed its authority under the NGPA if it defined categories of first sales for reasons other than to prevent circumvention of maximum lawful prices.

Accordingly, for the same reason, petitioners' arguments regarding Congressional intent in passing the Decontrol Act are unpersuasive. It is not the Commission's action which causes the pipeline and LDC affiliates' sales for resale to be subject to our NGA jurisdiction. It was passage of the Decontrol Act which changed the first sale status of affiliate sales for resale. The Decontrol Act repealed the maximum lawful price provisions of Title I of the NGPA but did not revise the definition of first sales in section 2(21) of the NGPA. The legislative history cited by Enron indicates the intent of Congress that the definition of first sale in section 2(21) still be given full effect. However, that definition includes the delineation of the Commission's authority under section 2(21)(A)(v) to add categories of sales to the first sale definition.[6] That part of section 2(21) grants discretionary authority to the Commission to add categories of sales to the first sale definition in only one narrow circumstance: to prevent circumvention of NGPA maximum lawful prices, which no longer exist as a result of the Wellhead Decontrol Act.

Enron tries to bolster its argument on Congressional intent by claiming that the use of the term ''wellhead'' in the NGPA and Decontrol Act is a misnomer and that the scope of both acts is much broader than the production area market. Thus, it argues, when the Congress explained that Commission jurisdiction over interstate pipeline sales for resale was to be unaffected by the Wellhead Decontrol Act,[7] it can be inferred that Congress thereby meant to indicate that all other sales for resale were to remain first sales. We do not interpret the cited reaffirmation of the Commission's NGA jurisdiction over pipeline sales for resale, on which Enron relies, to create an exclusion from NGA jurisdiction relative to all other sales not therein mentioned. The effect of the Decontrol Act on the NGPA is more properly based on the plain terms of the relevant sections of the statutes as enacted and express statements of intent in the Congressional reports, and we find nothing there to support Enron's proposed inference.

Designated Parties maintain that, in finding no substantive effect of its rule, the Commission failed to recognize the role of Title VI of the NGPA providing for the coordination of the NGPA with the NGA. However, all that Title VI and, in particular, section 601(a) of the NGPA provides is that the Commission's jurisdiction under the NGA does not apply to first sales. Accordingly, that section says nothing of relevance to the issue addressed here regarding what sales are first sales.

The petitioners also assert that the Commission has broad rulemaking authority under section 501 of the NGPA to reinstate § 270.203(c).[8] We do not agree. The Commission's authority to define terms used in the NGPA, including first sales, is limited. Section 501(b) of the NGPA states, ''Any such definition shall be consistent with the definitions set forth in this Act.'' For the Commission to define first sales for purposes other than circumvention would be inconsistent with the definition of first sales established by Congress in section 2(21) of the NGPA. The Commission cannot exceed the authority granted to it by the statute in performance of its duties.

We also reject the suggestion that the October 17, 1994 order erred in finding that no competitive disadvantage for marketing affiliates would arise from no longer treating marketing affiliate sales for resale in interstate commerce as first sales. As the October 17 order stated, Order No. 547 issued blanket certificates under NGA section 7 to all persons making sales of gas for resale in interstate commerce who are not interstate pipelines. Thus, the blanket certificates apply to all affiliated marketers who make sales for resale in interstate commerce, whether affiliated with an interstate pipeline or with an intrastate pipeline or LDC. Those certificates allow the affiliated marketers to operate exactly as if they were nonjurisdictional first sellers. Marketers making sales under the blanket certificate may make sales to whomever they choose at any price they can negotiate; no Commission authorization of any kind is required beyond the blanket marketer certificate itself. In short, the blanket marketer certificates place all marketers on an equal competitive footing by effectively eliminating the distinctions in treatment that formerly existed between jurisdictional and nonjurisdictional marketers.

Petitioners have not provided any evidence to support their contention of an adverse effect from the removal of the § 270.203(c) first sale definition. Moreover, any change in the blanket marketer certificate would entail a new rulemaking proceeding in which parties would have a full opportunity for notice and comment. Any supportable economic harm could be raised at that time.

In any event, Petitioners' contentions concerning the negative effect on marketing affiliates of subjecting their sales for resale to the Commission's NGA jurisdiction are essentially policy arguments that should have been directed to Congress. The Commission does not have the ability to expand the authority granted it by Congress, even if arguably there are valid policy reasons for reinstating § 270.203(c).

B. Procedure

Rehearing applicants contend that the Commission failed to satisfy the requirements of the APA and section 502 of the NGPA by removing § 270.203(c) without notice and comment. The notice and comment issue was fully addressed in the October 17, 1994 order and we will not repeat that discussion here. With one exception, the petitioners essentially make the same arguments which were rejected in the October 17, 1994 order.

The one new contention is that section 502 of the NGPA requires the Commission to give an opportunity for oral argument. Section 502(b) provides that, ''to the maximum extent practicable,'' an opportunity for oral presentation shall be provided with respect to any proposed rule. Section 502(b) does not provide for an absolute right to make an oral presentation, and the Commission has the discretion to rely on written comments if its appears that no purpose would be served by establishing oral argument. In particular, we believe the Commission is not required to provide an opportunity for oral presentations in the instant case where the Commission is acting on a statutory mandate for which there is no other course of action authorized and there currently is no practical difference in treatment of the affected companies after, as opposed to before, elimination of the subject regulation. In any event, petitioners' central claim is for the Commission to start the rulemaking process principally in order to make written comments. We

[6] Enron's rehearing request at page 5.

[7] Request for Rehearing or Reconsideration of Enron at p. 5 (citing NGPA Conference Report at pp. 8–9).

[8] NGPA Section 501(a) provides that the Commission may issue ''rules and orders as it may find necessary or appropriate to carry out its functions under this Act.''

believe the petitioners have exhausted their lines of argument in their rehearing requests and nothing would be gained by delaying the effect of our action in order to proceed with a different administrative vehicle to arrive at the same result.

The Commission Orders

The requests for rehearing and reconsideration are denied as discussed in the body of this order.

By the Commission.

Lois D. Cashell,

Secretary.

[FR Doc. 95–321 Filed 1–5–95; 8:45 am]

BILLING CODE 6717–01–P

DEPARTMENT OF HEALTH AND HUMAN SERVICES

Food and Drug Administration

21 CFR Part 5

Delegations of Authority and Organization; Center for Devices and Radiological Health

AGENCY: Food and Drug Administration, HHS.

ACTION: Final rule.

SUMMARY: The Food and Drug Administration (FDA) is amending the regulations for delegations of authority in order to redelegate authorities relating to determining the classification of devices first marketed after May 28, 1976, to additional officials in the Center for Devices and Radiological Health (CDRH).

EFFECTIVE DATE: January 6, 1995.

FOR FURTHER INFORMATION CONTACT:

Joseph M. Sheehan, Center for Devices and Radiological Health (HFZ–84), Food and Drug Administration, 2098 Gaither Rd., Rockville, MD 20850, 301–594–4765, or

Ellen R. Rawlings, Division of Management Systems and Policy (HFA–340), Food and Drug Administration, 5600 Fishers Lane, Rockville, MD 20857, 301–443–4976.

SUPPLEMENTARY INFORMATION: FDA is amending § 5.51 *Determination of classification of devices* (21 CFR 5.51) by extending the authority in § 5.51(b)(1) to determine the classification of a medical device first intended for commercial distribution after May 28, 1976, pursuant to section 513(f)(1)(A) of the Federal Food, Drug, and Cosmetic Act, to Deputy Division Directors, Associate Division Directors, and Branch Chiefs, Office of Device Evaluation, CDRH. The expanded delegation will ensure greater efficiency in making these classification decisions.

Further redelegation of the authority delegated is not authorized at this time. Authority delegated to a position by title may be exercised by a person officially designated to serve in such position in an acting capacity or on a temporary basis.

List of Subjects in 21 CFR Part 5

Authority delegations (Government agencies), Imports, Organization and functions (Government agencies).

PART 5—DELEGATIONS OF AUTHORITY AND ORGANIZATION

1. The authority citation for 21 CFR part 5 continues to read as follows:

Authority: 5 U.S.C. 504, 552, App. 2; 7 U.S.C. 138a, 2271; 15 U.S.C. 638, 1261–1282, 3701–3711a; secs. 2–12 of the Fair Packaging and Labeling Act (15 U.S.C. 1451–1461); 21 U.S.C. 41–50, 61–63, 141–149, 467f, 679(b), 801–886, 1031–1309; secs. 201–903 of the Federal Food, Drug, and Cosmetic Act (21 U.S.C. 321–394); 35 U.S.C. 156; secs. 301, 302, 303, 307, 310, 311, 351, 352, 354, 361, 362, 1701–1706, 2101, 2125, 2127, 2128 of the Public Health Service Act (42 U.S.C. 241, 242, 242a, 242l, 242n, 243, 262, 263, 263b, 264, 265, 300u–300u–5, 300aa–1, 300aa–25, 300aa–27, 300aa–28); 42 U.S.C. 1395y, 3246b, 4332, 4831(a), 10007–10008; E.O. 11490, 11921, and 12591; secs. 312, 313, 314 of the National Childhood Vaccine Injury Act of 1986, Pub. L. 99–660 (42 U.S.C. 300aa–1 note).

2. Section 5.51 is amended by revising paragraph (b)(1) to read as follows:

§ 5.51 Determination of classification of devices.

* * * * *

(b) * * *

(1) The Director and Deputy Director, CDRH, and the Director, Deputy Director, Associate Director, Chief of the Premarket Notification Section, Division and Deputy Division Directors, Associate Division Directors, and Branch Chiefs, Office of Device Evaluation, CDRH.

* * * * *

Dated: December 29, 1994.

William K. Hubbard,

Interim Deputy Commissioner for Policy.

[FR Doc. 95–359 Filed 1–5–95; 8:45 am]

BILLING CODE 4160–01–P–M

ENVIRONMENTAL PROTECTION AGENCY

40 CFR Part 52

[LA–13–1–6389; FRL–5125–8]

Approval and Promulgation of Implementation Plan: Louisiana Emission Statement

AGENCY: Environmental Protection Agency (EPA).

ACTION: Final rule.

SUMMARY: This action approves a revision to the Louisiana State Implementation Plan (SIP) to include revisions to the Louisiana Department of Environmental Quality (LDEQ) Regulation Title 33, Part III, Chapter 9, *General Regulations on Control of Emissions and Emission Standards*, Section 919, *Emission Inventory*. These revisions are for the purpose of implementing an emission statement program for stationary sources within the ozone nonattainment areas. The implementation plan was submitted by the State to satisfy the Federal requirements for an emission statement program as part of the SIP for Louisiana.

EFFECTIVE DATE: This final rule is effective on February 6, 1995.

ADDRESSES: Copies of the documents relevant to this action are available for public inspection during normal business hours at the following locations. Interested persons wanting to examine these documents should make an appointment with the appropriate office at least 24 hours before the visiting day.

U.S. Environmental Protection Agency, Region 6, Air Programs Branch (6T-AP), 1445 Ross Avenue, suite 700, Dallas, Texas 75202–2733

U.S. Environmental Protection Agency, Air and Radiation Docket and Information Center, 401 M Street, SW., Washington, DC 20460

Louisiana Department of Environmental Quality, Air Quality Division, 7290 Bluebonnet, Baton Rouge, Louisiana 70810.

FOR FURTHER INFORMATION CONTACT: Mr. Herbert R. Sherrow, Jr., Planning Section (6T-AP), Air Programs Branch, USEPA Region 6, 1445 Ross Avenue, Dallas, Texas 75202–2733, Telephone (214) 655–7237.

SUPPLEMENTARY INFORMATION:

Background

The air quality planning and SIP requirements for ozone nonattainment and transport areas are set out in subparts I and II of part D of title I of the Clean Air Act (CAA or ''the Act''),

as amended by the Clean Air Act Amendments (CAAA) of 1990. The EPA has published a ''General Preamble'' describing the EPA's preliminary views on how the EPA intends to review SIPs and SIP revisions submitted under title I of the CAA, including those State submittals for ozone transport areas within the States (see 57 FR 13498 (April 16, 1992) (''SIP: General Preamble for the Implementation of Title I of the Clean Air Act Amendments of 1990''), 57 FR 18070 (April 28, 1992) (''Appendices to the General Preamble''), and 57 FR 55620 (November 25, 1992) (''SIP: NO_X Supplement to the General Preamble'')).

The EPA has also issued a draft guidance document describing the requirements for the emission statement programs discussed in this document, entitled ''Guidance on the Implementation of an Emission Statement Program'' (July 1992).

Section 182 of the Act sets out a graduated control program for ozone nonattainment areas. Section 182(a) sets out requirements applicable in marginal nonattainment areas, which are also made applicable in subsections (b), (c), (d), and (e) to all other ozone nonattainment areas. Among the requirements in section 182(a) is a program in paragraph (3) of that subsection for stationary sources to prepare and submit to the State each year emission statements showing actual emissions of volatile organic compounds (VOC) and nitrogen oxides (NO_X). This paragraph provides that the States are to submit a revision to their SIPs by November 15, 1992, establishing this emission statement program.

The State passed an emergency regulation after following all applicable State Administrative Procedures Act requirements for submittal to the EPA by November 15, 1992, to satisfy CAA requirements. The State subsequently entered into State rulemaking for a permanent regulation. It was submitted to public hearing on December 20, 1992. The State addressed public comments and made minor adjustments. Following the public hearing, the final rule was adopted by the State and submitted to the EPA as a proposed revision to the SIP on March 3,1993. The permanent emission statement regulations were then codified at LAC 33:III.919.

Technical Correction

In reviewing the State's submitted permanent regulation, technical errors were discovered in subsections B.2.a. and B.2.d. Subsection B.2.a. contains a reference to subsection B.2.d., when it should refer to subsection B.2.c. Subsection B.2.d. omitted a reference to subsection B.2.c. The State prepared a technical correction to the rule and submitted the revised rule to public hearing. Following the public hearing, the rule was adopted by the State on October 20, 1994. On November 15, 1994, the State submitted documentation to the EPA substantiating that the technical correction had been adopted.

Response to Comments

The EPA proposed approval of the Louisiana emission statement regulations on April 7, 1994 (59 FR 16582–16585), and no comments were received regarding the proposed approval.

Final Action

In today's action, the EPA is approving the Louisiana emission statement program SIP submittal.

The analysis of the Louisiana regulation shows that it adequately addresses all components of an emission statement program.

In addition, the State has agreed to provide the EPA with emission statement data for the EPA Aerometric Information Retrieval System through the State's grants commitments and to provide status reports.

The EPA has reviewed this request for revision of the Federally-approved SIP for conformance with the provisions of the CAAA of November 15, 1990. The EPA has determined that this action conforms with those requirements.

This final action on the Louisiana emission statement SIP is unchanged from the April 7, 1994, proposed approval action with the exception of the State's confirmation of adoption of the corrected rule. The discussion herein provides only a broad overview of the proposed action that the EPA is now finalizing. The public is referred to the April 7, 1994, proposed approval **Federal Register** action for a full discussion of the action that the EPA is now finalizing.

This action makes final the action proposed at 59 FR 16582 (April 7, 1994). As noted elsewhere in this action, the EPA received no public comments on the proposed action. As a direct result, the Regional Administrator has reclassified this action from Table Two to Table Three under the processing procedures established at 54 FR 2214, January 19, 1989, and revised via memorandum from the Assistant Administrator for Air and Radiation to the Regional Administrators dated October 4, 1993.

Nothing in this action should be construed as permitting, allowing, or establishing a precedent for any future request for revision to any SIP. Each request for revision to the SIP shall be considered separately in light of specific technical, economical, and environmental factors, and in relation to relevant statutory and regulatory requirements.

Regulatory Process

Under the Regulatory Flexibility Act, 5 U.S.C. 600 *et seq*, the EPA must prepare a regulatory flexibility analysis assessing the impact of any proposed or final rule on small entities (5 U.S.C. 603 and 604). Alternatively, the EPA may certify that the rule will not have a significant impact on a substantial number of small entities. Small entities include small businesses, small not-for-profit enterprises, and government entities with jurisdiction over populations of less than 50,000.

The SIP approvals under section 110 and subchapter I, part D, of the CAA do not create any new requirements, but simply approve requirements that the State is already imposing. Therefore, because the Federal SIP-approval does not impose any new requirements, I certify that it does not have a significant impact on any small entities affected. Moreover, due to the nature of the Federal-State relationship under the CAA, preparation of a regulatory flexibility analysis would constitute Federal inquiry into the economic reasonableness of State action. The CAA forbids the EPA to base its actions concerning SIPs on such grounds (*Union Electric Co. v. U.S. E.P.A.*, 427 U.S. 246, 256–66 (S. Ct. 1976; 42 U.S.C. 7410(a)(2)).

Under section 307(b)(1) of the CAA, petitions for judicial review of this action must be filed in the United States Court of Appeals for the appropriate circuit by March 7, 1995. Filing a petition for reconsideration by the Administrator of this final rule does not affect the finality of this rule for the purposes of judicial review, nor does it extend the time within which a petition for judicial review may be filed, and shall not postpone the effectiveness of such rule or action. This action may not be challenged later in proceedings to enforce its requirements (see section 307(b)(2)).

Executive Order 12866

This action has been classified as a Table Three action by the Regional Administrator under the procedures published in the **Federal Register** on January 19, 1989 (54 FR 2214–2225), as revised by an October 4, 1993, memorandum from Michael H. Shapiro, Acting Assistant Administrator for Air and Radiation. The Office of

Management and Budget (OMB) has exempted this action from review under Executive Order 12866.

List of Subjects in 40 CFR Part 52

Environmental protection, Air pollution control, Emission statements, Hydrocarbons, Incorporation by reference, Intergovernmental relations, Nitrogen oxide, Oxides of nitrogen, SIP requirements, Volatile organic compounds.

Note: Incorporation by reference of the SIP for the State of Louisiana was approved by the Director of the Federal Register on July 1, 1982.

Dated: December 6, 1994.

William B. Hathaway,

Acting Regional Administrator.

Part 52, chapter I, title 40 of the Code of Federal Regulations is amended as follows:

PART 52—[AMENDED]

1. The authority citation for part 52 continues to read as follows:

Authority: 42 U.S.C. 7401–7671q.

Subpart T—Louisiana

2. Section 52.970 is amended by adding paragraph (c)(65) to read as follows:

§ 52.970 Identification of plan.

* * * * *

(c) * * *

(65) Revisions to the Louisiana Department of Environmental Quality Regulation Title 33, Part III, Chapter 9, Section 919, (February 2, 1993), and a technical correction (October 20, 1994). These revisions are for the purpose of implementing an emission statement program for stationary sources within the ozone nonattainment areas.

(i) Incorporation by reference.

(A) Revisions to LAC, title 33, Part III, Chapter 9, *General Regulations on Control of Emissions and Emissions Standards,* Section 919, *Emission Inventory,* adopted in the *Louisiana Register,* Vol. 19, No. 2, 184–186, February 20, 1993. All subsections except B.2.a. and B.2.d.

(B) Revisions to LAC, title 33, Part III, Chapter 9, *General Regulations on Control of Emissions and Emissions standards,* Section 919, *Emission Inventory,* adopted in the *Louisiana Register,* Vol 20, No. 10, 1102, October 20, 1994. Subsections B.2.a. and B.2.d.

[FR Doc. 95–290 Filed 1–5–95; 8:45 am]

BILLING CODE 6560–50–P

40 CFR Part 52

[MA–26–1–6173a; A–1–FRL–5123–5]

Approval and Promulgation of Air Quality Implementation Plans; Massachusetts; RACT for Nichols and Stone Company

AGENCY: Environmental Protection Agency (EPA).

ACTION: Direct final rule.

SUMMARY: EPA is approving a State Implementation Plan (SIP) revision submitted by the Commonwealth of Massachusetts. This revision establishes and requires reasonably available control technology (RACT) for Nichols & Stone Company in Gardner, MA. The intended effect of this action is to approve a source specific RACT determination made by Massachusetts in accordance with the commitments specified in its Ozone Attainment Plan approved by EPA on November 9, 1983. This action is being taken in accordance with section 110 of the Clean Air Act.

DATES: This final rule is effective March 7, 1995, unless notice is received by February 6, 1995 that adverse or critical comments will be submitted. If the effective date is delayed, timely notice will be published in the **Federal Register**.

ADDRESSES: Comments may be mailed to Linda M. Murphy, Director, Air, Pesticides and Toxics Management Division, U.S. Environmental Protection Agency, Region I, JFK Federal Building, Boston, MA 02203. Copies of the documents relevant to this action are available for public inspection during normal business hours, by appointment at the Air, Pesticides and Toxics Management Division, U.S. Environmental Protection Agency, Region I, One Congress Street, 10th floor, Boston, MA; and Division of Air Quality Control, Department of Environmental Protection, One Winter Street, 8th Floor, Boston, MA 02108.

FOR FURTHER INFORMATION CONTACT: Jeanne Cosgrove, (617) 565–3246.

SUPPLEMENTARY INFORMATION: On July 19, 1993 and October 27, 1993, the Massachusetts Department of Environmental Protection (DEP) submitted a formal revision to its State Implementation Plan (SIP). The SIP revision consists of a final plan approval issued to Nichols & Stone Company, effective June 30, 1993. The plan approval establishes and requires reasonably available control technology (RACT) to control volatile organic compound (VOC) emissions from Nichols & Stone in Gardner, Massachusetts.

Summary of SIP Revision

The DEP issued this plan approval pursuant to the requirements found in 310 CMR 7.18(17), which was approved by EPA on November 9, 1983 (48 FR 51480) as part of Massachusetts' Ozone Attainment Plan. Massachusetts Regulation 310 CMR 7.18(17),'' Reasonably Available Control Technology (RACT),'' requires the DEP to determine and impose RACT on otherwise unregulated stationary sources of VOC with the potential to emit greater than or equal to 100 tons per year.

For the reasons outlined in the Technical Support Document prepared for this revision, EPA believes that the limits the DEP has established represent RACT for Nichols & Stone.

The plan approval, dated June 30, 1993, requires Nichols & Stone to meet a 12 month rolling average VOC limit of 98 tons for the entire facility. To ensure short term compliance and enforceability, the MA DEP has set the following emission limitations on the VOC content in the coatings as applied to the wood furniture:

Description of coating	Lbs. VOC/ gallon of coating (less water) as applied
Stains	6.63
Sealers	4.91
Black Undercoat	6.29
Lacquer Sheen topcoat (to be used specifically for the college chair business)	5.6
Topcoats (except for lacquer sheens)	4.7
Toner	6.67
colored lacquer	6.11

Other RACT conditions include high volume low pressure (HVLP) technology, good housekeeping practices and recordkeeping/monitoring requirements. Nichols & Stone is required to minimize air emissions by using HVLP technology for all finishing operations, except for staining of chairs which use flow coaters, decorative hand painting and small touch up/repair work. Small touch up/repair work using air-assisted spray guns must not exceed 5 gallons of coating per day for the entire facility. All VOC formulations must be stored in covered containers. Spray guns must be enclosed during cleaning or cleaned without solvents. To evaluate compliance, the plan approval requires Nichols & Stone to maintain daily records of the identity, quantity and VOC content of each coating as applied.

EPA is publishing this action without prior proposal because the Agency

views this as a noncontroversial amendment and anticipates no adverse comments. However, in a separate document in this **Federal Register** publication, EPA is proposing to approve the SIP revision should adverse or critical comments be filed. This action will be effective on March 7, 1995 unless, within 30 days of its publication, adverse or critical comments are received.

If the EPA receives such comments, this action will be withdrawn before the effective date by simultaneously publishing a subsequent notice that will withdraw the final action. All public comments received will then be addressed in a subsequent final rule based on this action serving as a proposed rule. The EPA will not institute a second comment period on this action. Any parties interested in commenting on this action should do so at this time. If no such comments are received, the public is advised that this action will be effective on March 7, 1995.

FINAL ACTION: EPA is approving the conditions described above as RACT for Nichols & Stone Company.

Under the Regulatory Flexibility Act, 5 U.S.C. § 600 et. seq., EPA must prepare a regulatory flexibility analysis assessing the impact of any proposed or final rule on small entities. 5 U.S.C. §§ 603 and 604. Alternatively, EPA may certify that the rule will not have a significant impact on a substantial number of small entities. Small entities include small businesses, small not-for-profit enterprises, and government entities with jurisdiction over populations of less than 50,000.

This action has been classified as a Table 3 action by the Regional Administrator under the procedures published in the **Federal Register** on January 19, 1989 (54 FR 2214–2225), as revised by an October 4, 1993, memorandum from Michael H. Shapiro, Acting Assistant Administrator for Air and Radiation. A future notice will inform the general public of these tables. On January 6, 1989, the Office of Management and Budget (OMB) waived Table 2 and Table 3 SIP revisions from the requirement of section 3 of Executive Order 12291 for a period of two years. The U.S. EPA has submitted a request for a permanent waiver for Table 2 and Table 3 SIP revisions. The OMB has agreed to continue the waiver until such time as it rules on U.S. EPA's request. This request continues in effect under Executive Order 12866 which superseded Executive Order 12291 on September 30, 1993.

SIP approvals under section 110 and subchapter I, Part D of the CAA do not create any new requirements, but simply approve requirements that the State is already imposing. Therefore, because the federal SIP-approval does not impose any new requirements, I certify that it does not have a significant impact on any small entities affected. Moreover, due to the nature of the federal-state relationship under the CAA, preparation of a regulatory flexibility analysis would constitute federal inquiry into the economic reasonableness of state action. The CAA forbids EPA to base its actions concerning SIPs on such grounds. *Union Electric Co.* v. *U.S. E.P.A.*, 427 U.S. 246, 256–66 (S.Ct. 1976); 42 U.S.C. § 7410 (a)(2).

Nothing in this action should be construed as permitting or allowing or establishing a precedent for any future request for revision to any State implementation plan. Each request for revision to the State implementation plan shall be considered separately in light of specific technical, economic, and environmental factors and in relation to relevant statutory and regulatory requirements.

Under section 307(b)(1) of the Clean Air Act, petitions for judicial review of this action must be filed in the United States Court of Appeals for the appropriate circuit by March 7, 1995. Filing a petition for reconsideration by the Administrator of this final rule does not affect the finality of this rule for the purposes of judicial review nor does it extend the time within which a petition for judicial review may be filed, and shall not postpone the effectiveness of such rule or action. This action may not be challenged later in proceedings to enforce its requirements. (See section 307(b)(2).)

List of Subjects in 40 CFR Part 52

Environmental protection, Air pollution control, Hydrocarbons, Incorporation by reference, Ozone.

Note: Incorporation by reference of the State Implementation Plan for the State of Massachusetts was approved by the Director of the Federal Register on July 1, 1982.

Dated: September 18, 1994.

John DeVillars,

Regional Administrator, Region I.

Part 52 of chapter I, title 40 of the Code of Federal Regulations is amended as follows:

PART 52—[AMENDED]

1. The authority citation for part 52 continues to read as follows:

Authority: 42 U.S.C. 7401–7671q.

Subpart W—Massachusetts

2. Section 52.1120 is amended by adding paragraph (c)(100) to read as follows:

§ 52.1120 Identification of plan.

* * * * *

(c) * * *

(100) Revisions to the State Implementation Plan submitted by the Massachusetts Department of Environmental Protection on July 19, 1993.

(i) Incorporation by reference.

(A) Letter from the Massachusetts Department of Environmental Protection dated July 19, 1993 submitting a revision to the Massachusetts State Implementation Plan.

(B) Plan approval no. C–P–93–011, effective June 30, 1993, which contains emissions standards, operating conditions, and recordkeeping requirements applicable to Nichols & Stone Company in Gardner, Massachusetts.

(ii) Additional materials.

(A) Letter dated October 27, 1993 from Massachusetts Department of Environmental Protection submitting certification of a public hearing.

* * * * *

3. In § 52.1167 Table 52.1167 is amended by adding a new entry to existing state citations for 310 CMR 7.18(17) to read as follows:

§ 52.1167 EPA-approved Massachusetts State regulations.

* * * * *

TABLE 52.1167.—EPA-APPROVED RULES AND REGULATIONS

State citation	Title/subject	Date submitted by State	Date approved by EPA	Federal Register citation	52.1120 (c)	Comments/unapproved sections
*	*	*	*	*	*	*
310 CMR 7.18(17)	RACT	July 19, 1993 ..	January 6, 1995.	[Insert *FR* citation from published date].	100	RACT Approval for Nichols & Stone Co.

TABLE 52.1167.—EPA-APPROVED RULES AND REGULATIONS—Continued

State citation	Title/subject	Date submitted by State	Date approved by EPA	Federal Register citation	52.1120 (c)	Comments/unapproved sections
*	*	*	*	*	*	*

[FR Doc. 95–292 Filed 1–5–95; 8:45 am]

BILLING CODE 6560–50–P

40 CFR Part 52

[MD3–2–5624a, MD10–2–6169a, MD24–2–5968a, MD25–1–6146a, MD28–1–6147a; FRL–5123–3]

Approval and Promulgation of Air Quality Implementation Plans; Maryland; VOC RACT Catch-ups and Stage I Vapor Recovery

AGENCY: Environmental Protection Agency (EPA).

ACTION: Direct final rule.

SUMMARY: EPA is approving State Implementation Plan (SIP) revisions submitted by the State of Maryland. These revisions establish statewide applicability for Maryland's category-specific volatile organic compound (VOC) reasonably available control technology (RACT) regulations, lower the applicability threshold for VOC RACT regulations, and correct deficiencies in Maryland's Stage I Vapor Recovery rule. These revisions were submitted to comply with the RACT ''Catch-up'' and ''Fix-up'' provisions of the Clean Air Act (the Act). The intended effect of this action is to approve revisions to Maryland's category-specific VOC RACT regulations, including Stage I. This action is being taken in accordance with the SIP submittal and revision provisions of the Act.

DATES: This final rule is effective on March 7, 1995 unless notice is received on or before February 6, 1995 that adverse or critical comments will be submitted. If the effective date is delayed, timely notice will be published in the **Federal Register**.

ADDRESSES: Comments may be mailed to Thomas J. Maslany, Director, Air, Radiation, and Toxics Division, U.S. Environmental Protection Agency, Region III, 841 Chestnut Building, Philadelphia, Pennsylvania 19107. Copies of the documents relevant to this action are available for public inspection during normal business hours at the Air, Radiation, and Toxics Division, U.S. Environmental Protection Agency, Region III, 841 Chestnut Building, Philadelphia, Pennsylvania 19107; the Air and Radiation Docket and Information Center, U.S. Environmental Protection Agency, 401 M Street, SW, Washington, DC 20460; and the Maryland Department of the Environment, 2500 Broening Highway, Baltimore, Maryland 21224.

FOR FURTHER INFORMATION CONTACT: Maria A. Pino, (215) 597–9337.

SUPPLEMENTARY INFORMATION: On June 8, 1993 and July 19, 1993, the State of Maryland submitted revisions to its ozone SIP to establish statewide applicability for Maryland's VOC RACT regulations, lower the applicability threshold for VOC RACT regulations, and correct deficiencies in Maryland's Stage I Vapor Recovery (Stage I) regulation. These revisions were submitted to comply with the RACT ''Catch-up'' and ''Fix-up'' provisions of the Act. Previously, on April 5, 1991, April 2, 1992, and January 18, 1993, Maryland submitted SIP revisions to comply with the RACT Fix-up requirements. These submittals also contain revisions to Maryland's Stage I regulation.

This rulemaking action addresses revisions to Maryland's Stage I regulation (COMAR 26.11.13.04) submitted by Maryland on April 5, 1991, April 2, 1992, January 18, 1993, June 8, 1993 and July 19, 1993. This rulemaking action also addresses revisions to Maryland's VOC RACT regulations, COMAR 26.11.11.02, 26.11.11.04, 26.11.13.01, 26.11.13.02, 26.11.13.07, 26.11.19.01, 26.11.19.02A, F and H, and 26.11.19.10, submitted on June 8, 1993 and July 19, 1993.

Maryland's June 8, 1993 and July 19, 1993 submittals also contain revisions to Maryland's generic VOC RACT and minor source regulations, COMAR 26.11.19.02G and 26.11.06.06 A and B, respectively. Revisions to COMAR 26.11.19.02G and 26.11.06.06 A and B are the subject of a separate rulemaking action.

I. Background

RACT Fix-up Requirement

Under the pre-amended Act (i.e the Act prior to the 1990 Amendments), ozone nonattainment areas were required to adopt RACT rules for sources of VOC emissions. EPA issued three sets of control technique guideline documents (CTGs), establishing a ''presumptive norm'' for RACT for various categories of VOC sources. The three sets of CTGs were (1) Group I—issued before January 1978 (15 CTGs); (2) Group II—issued in 1978 (9 CTGs); and (3) Group III—issued in the early 1980's (5 CTGs). Those sources not covered by a CTG were called non-CTG sources.

EPA determined that an area's SIP-approved attainment date established which RACT rules the area needed to adopt and implement. Under pre-amended section 172(a)(1), ozone nonattainment areas were generally required to attain the ozone standard by December 31, 1982. Those areas that submitted an attainment demonstration projecting attainment by that date were required to adopt RACT for sources covered by the Group I and II CTGs. Those areas that sought an extension of the attainment date under section 172(a)(2) to as late as December 31, 1987 were required to adopt RACT for all CTG sources and for all major non-CTG sources (i.e. sources having potential VOC emissions of 100 tons per year (TPY) or more).

Under the pre-amended Act, EPA designated the Baltimore, Washington DC, and Philadelphia areas as nonattainment. Under the pre-amended Act, the Baltimore area included the City of Baltimore and Anne Arundel, Baltimore, Carroll, Harford, and Howard Counties. Under the pre-amended Act, the Washington DC area included Montgomery and Prince George's Counties in Maryland, as well as the District of Columbia and a portion of Northern Virginia. Under the pre-amended Act, the Philadelphia nonattainment area did not include any areas in the State of Maryland.

The Baltimore and Washington DC nonattainment areas each established a pre-enactment (i.e. prior to enactment of the 1990 Amendments) attainment date of December 31, 1987 and, therefore, were required to adopt RACT for Group I, II, and III CTG categories as well as non-CTG VOC sources with the potential to emit 100 TPY or more. However, these areas did not attain the ozone standard by the approved attainment date. On May 26, 1988, EPA notified the Governor of Maryland that portions of Maryland's SIP were

inadequate to attain and maintain the ozone standard and requested that deficiencies in the existing SIP be corrected (EPA's SIP Call). On November 15, 1990, amendments to the 1977 Clean Air Act were enacted. Pub. L. 101–549, 104 Stat. 2399, codified at 42 U.S.C. 7401–7671q. In amended section 182(a)(2)(A) of the Act, Congress statutorily adopted the requirement that pre-enactment ozone nonattainment areas which retained their designation of nonattainment and were classified as marginal or above fix their deficient RACT rules for ozone by May 15, 1991. This is known as the RACT fix-up requirement.

Under the amended Act, EPA and the States were required to review the designation of areas and to redesignate areas as nonattainment for ozone if the air quality data from 1987, 1988, and 1989 indicated that the area was violating the ozone standard. On November 6, 1991 and November 30, 1992, EPA issued those designations. 56 FR 56694 and 57 FR 56762. The Baltimore and Philadelphia nonattainment areas retained their designations of nonattainment and were classified as severe. The Washington DC nonattainment area also retained its designation of nonattainment and was classified as serious. 56 FR 56694 (Nov. 6, 1991).

RACT Catch-up Requirement

Section 182(b)(2) of the amended Act requires States to adopt RACT rules for all areas designated nonattainment for ozone and classified as moderate or above. There are three parts to the section 182(b)(2) RACT requirement: (1) RACT for sources covered by an existing CTG (i.e. a CTG issued prior to the enactment of the Amendments); (2) RACT for sources covered by a post-enactment CTG; and (3) all major sources not covered by a CTG. This RACT requirement makes nonattainment areas that previously were exempt from RACT requirements ''catch up'' to those nonattainment areas that became subject to those requirements during an earlier period, and therefore is known as the RACT Catch-up requirement. In addition, it requires newly designated ozone nonattainment areas to adopt RACT rules consistent with those for previously designated nonattainment areas.

Since the Baltimore and Washington DC nonattainment areas were previously required to adopt RACT for Group I, II, and III CTG sources, to meet the RACT Catch-up requirement, Maryland was not required to submit additional existing CTG RACT rules for those areas. However, the size threshold for defining a major source for severe and serious areas has been lowered under the amended Act to cover sources that have the potential to emit 25 and 50 TPY of VOC or more, respectively. Therefore, Maryland was required to adopt RACT rules for all sources that exceed these cut-offs.

The pre-enactment Washington DC and Philadelphia nonattainment areas retained their nonattainment designations, and EPA extended the boundaries of these nonattainment areas. The Washington DC nonattainment area was extended to include Calvert, Charles, and Frederick Counties in Maryland. The Philadelphia nonattainment area was expanded to include Cecil County, Maryland. 56 FR 56694 (November 6, 1991). Therefore, under the RACT Catch-up provision of section 182(b)(2), the State was required, for these portions of the nonattainment areas, to submit RACT rules covering all pre-enactment CTGs, to identify all sources the State anticipates will be covered by a post-enactment CTG and to submit non-CTG rules for all remaining major sources with the potential to emit 50 and 25 TPY VOC or more in the Washington DC and Philadelphia nonattainment areas, respectively.

As stated above, EPA and the States reviewed the designation of areas and redesignate areas as nonattainment for ozone using air quality data from 1987, 1988, and 1989. EPA issued those designations on November 6, 1991 and November 30, 1992. 56 FR 56694 and 57 FR 56762. The Kent and Queen Anne's Counties area, which was designated unclassifiable/attainment prior to enactment, was redesignated to nonattainment and classified as marginal. The Counties of Allegany, Caroline, Dorchester, Garrett, St. Mary's, Somerset, Talbot, Washington, Wicomico, and Worcester retained their unclassifiable/attainment designations. Under the pre-amended Act, these areas were not required to meet the RACT requirement for nonattainment areas.

The entire State of Maryland, including Kent, Queen Anne's, Allegany, Caroline, Dorchester, Garrett, St. Mary's, Somerset, Talbot, Washington, Wicomico, and Worcester Counties, is located in the ozone transport region (OTR) that was statutorily created by section 184 of the Act. As such, Maryland was required to adopt RACT rules for all CTG and non-CTG sources throughout the State by November 15, 1992. Therefore, under the RACT Catch-up provision of section 182(b)(2), Maryland was required to submit RACT rules for Kent, Queen Anne's, Allegany, Caroline, Dorchester, Garrett, St. Mary's, Somerset, Talbot, Washington, Wicomico, and Worcester Counties covering all pre-enactment CTGs, to identify all sources the State anticipates will be covered by a post-enactment CTG and to submit non-CTG rules for all remaining major sources having the potential to emit 50 TPY of VOC or more.

In summary, to fully comply with the RACT Catch-up provisions of the Act, Maryland is required to expand its RACT regulations to statewide. It must adopt all RACT regulations for all CTG sources and all major non-CTG VOC sources (VOC sources with the potential to emit ≥ 25 TPY in Cecil County and the Baltimore nonattainment area and ≥ 50 TPY in the remainder of the State) throughout the State. Sources must comply with these provisions as expeditiously as possible, but no later than May 15, 1993.

State Submittals

On April 5, 1991, September 20, 1991, April 2, 1992, January 18, 1993, June 8, 1993 and July 19, 1993, Maryland submitted SIP revisions to address the RACT fix-up requirement. Portions of Maryland's June 8, 1993 and July 19, 1993 submittals also address the RACT Catch-up requirement.

EPA proposed approval of portions of Maryland's April 5, 1991 submittal on September 27, 1993 (58 FR 50307). EPA proposed approval of portions of Maryland's September 20, 1991, April 2, 1992 and January 18, 1993 submittals on and September 30, 1993 (58 FR 51028). Final action on this proposal was taken on September 7, 1994 (59 FR 46180). EPA proposed approval of one regulation contained in these submittals, Standards for Adhesive Application, on February 16, 1993 (58 FR 8565). Final action on this regulation was taken on November 30, 1993 (58 FR 63085).

The portions of Maryland's April 5, 1991, April 2, 1992, January 18, 1993 June 8, 1993, and July 19, 1993 submittals pertaining to Maryland's Stage I (COMAR 26.11.13.04) regulation are addressed in this rulemaking action. Maryland's September 20, 1991 submittal did not include any revisions to Stage I. This rulemaking action also addresses revisions to Maryland's VOC RACT regulations, COMAR 26.11.11.02, 26.11.11.04, 26.11.13.01, 26.11.13.02, 26.11.13.07, 26.11.19.01, 26.11.19.02A, F and H, and 26.11.19.10, submitted on June 8, 1993 and July 19, 1993.

Maryland's April 5, 1991, June 8, 1993 and July 19, 1993 submittals also contain revisions to Maryland's generic VOC RACT and minor source

regulations, COMAR 26.11.19.02G and 26.11.06.06A and B, respectively. Revisions to COMAR 26.11.19.02G and 26.11.06.06A and B are the subject of a separate rulemaking action.

II. EPA Evaluation and Action

VOCs contribute to the production of ground level ozone and smog. These rules were adopted as part of an effort to achieve the National Ambient Air Quality Standard (NAAQS) for ozone. The following is EPA's evaluation and action for the State of Maryland. Detailed descriptions of the amendments addressed in this document, and EPA's evaluation of the amendments, are contained in the technical support document (TSD) prepared for these revisions. Copies of the TSD are available from the EPA Regional office listed in the **ADDRESSES** section of this document.

RACT Catch-up Requirements

Because Maryland is in the OTR, the entire State is subject to the RACT Catch-up provisions of section 182(b)(2) of the Act. Therefore, Maryland is required to (1) adopt statewide RACT rules covering all pre-enactment CTGs, (2) identify all sources the State anticipates will be covered by a post-enactment CTG and (3) submit non-CTG rules for all remaining major sources. The Baltimore and Philadelphia nonattainment areas are classified as severe. Therefore a major source in these areas is a source having the potential to emit 25 TPY of VOC or more. In the remainder of the State, a major source is defined as a source having the potential to emit 50 TPY of VOC or more.

State Submittal

Maryland had previously adopted all applicable Group I, II, and III CTGs. On February 22, 1993, Maryland submitted a negative declaration letter to EPA indicating that Maryland has no sources covered by the CTGs which Maryland has not adopted. Through the following revisions, Maryland has expanded the applicability of its CTG regulations to statewide and lowered the major source threshold for non-CTG RACT.

(1) Maryland revised the applicability of its VOC stationary source regulations, COMAR 26.11.11.02 (Asphalt Paving), COMAR 26.11.11.04 (Petroleum Refineries), COMAR 26.11.13 (Control of Gasoline and Volatile Organic Compound Storage and Handling), and COMAR 26.11.19 (Volatile Organic Compounds from Specific Processes), to statewide. Under COMAR 26.11.11, sources in the newly regulated areas must comply by the effective date of the regulation, April 26, 1993. Under COMAR 26.11.13 and the category-specific regulations in COMAR 26.11.19, sources in Maryland's newly regulated areas must comply as expeditiously as possible, but no later than May 15, 1993. Sources in Maryland's pre-enactment nonattainment areas must already be in compliance with COMAR 26.11.11, 26.11.13, and 26.11.19.

(2) Maryland also added a definition for the term ''major stationary source of VOC'' (COMAR 26.11.19.01B(4)) to its VOC regulations. This term means any stationary source with the potential to emit (a) 25 TPY of VOC or more in the City of Baltimore and Anne Arundel, Baltimore, Carroll, Cecil, Harford, and Howard Counties and (b) 50 TPY in the remainder of the State.

(3) Finally, Maryland changed the applicability threshold for COMAR 26.11.19.10: Graphic Arts, from 550 pounds per day (100 TPY) to the major source threshold defined in COMAR 26.11.19.01B(4).

EPA's Evaluation

The revisions listed above are approvable as SIP revisions because they comply with the RACT Catch-up requirements of the Act. Through these revisions, Maryland has met the first major Catch-up requirement, which was to adopt statewide RACT rules covering all pre-enactment CTGs.

The remaining requirements, (1) to identify all sources the State anticipates will be covered by a post-enactment CTG and (2) to submit non-CTG rules for all remaining major sources, are addressed through Maryland's generic VOC RACT regulation, COMAR 26.11.19.02G. Revisions to COMAR 26.11.19.02G are the subject of a separate rulemaking action.

RACT Fix-up Requirements

Maryland was required to correct deficiencies in existing VOC RACT regulations applicable in pre-enactment nonattainment areas. EPA identified deficiencies in Maryland's Stage I regulation, COMAR 26.11.13.04, in a June 14, 1988 letter to Maryland which followed EPA's SIP Call. In order to correct the identified deficiencies, Maryland must revise its Stage I regulation to conform to EPA guidance, including the Stage I CTG and model rules.

Specifically, Maryland is required to revise its Stage I bulk terminal regulation to require vapor control systems to collect all vapors from its loading racks and destroy at least 90% of these vapors. Maryland is required to adopt a bulk gasoline plant regulation which conforms with EPA policy. Additionally, Maryland is required to revise its Stage I small storage tank regulation to require that all tanks installed prior to January 1, 1979 with a 2000 gallon capacity or greater and all tanks constructed after December 31, 1978 with a 250 gallon capacity or greater be equipped with a vapor control system.

State Submittal

Maryland revised its regulation, COMAR 26.11.13.04: Control of Gasoline and VOC Storage—Loading Operations (A. Bulk Terminals, B. Bulk Plants, C. Small Storage Tanks, and D. General Requirements), to respond to the requirements listed above. Additionally, Maryland expanded the applicability of this regulation to statewide. Maryland also made a minor revision to its definition of the term ''bulk gasoline plant'' (COMAR 26.11.13.01B(1)), for clarification.

A. Bulk Terminals

Maryland's Stage I bulk gasoline terminal regulation, which covers facilities with daily gasoline throughput greater than 20,000, now requires vapor control systems at loading racks to collect all vapors and destroy at least 90% of these vapors.

B. Bulk Plants

Maryland's bulk gasoline plant regulates facilities with daily gasoline throughput between 4,000 gallons and 20,000 gallons. This regulation conforms with EPA's model rule requiring vapor balance systems and top submerged or bottom loading systems. This regulation also prohibits the transfer of gasoline into a storage tank unless Stage I is properly used and requires that the vapor control system be leak tight.

C. Small Storage Tanks

Maryland revised the capacity limits in Maryland's small storage tank Stage I regulation. The new capacity cutoffs are 250 gallons for ''new'' tanks constructed after May 8, 1991 and 2,000 gallons for ''old'' tanks constructed before May 8, 1991.

D. General Requirements

This section prohibits the loading of VOC or gasoline into a tank truck, railroad car, or other contrivance unless the loading connections on the vapor lines are equipped with leak tight fittings which automatically close upon disconnection, and the equipment is maintained and operated to prevent avoidable liquid leaks during loading and unloading.

EPA's Evaluation

These revisions are approvable because they correct deficiencies in Maryland's existing Stage I regulation and expand the applicability to statewide to conform with the RACT Fix-up and Catch-up requirements of the Act. These regulations now conform to EPA guidance.

In COMAR 26.11.13.04C, Small Storage Tanks, Maryland's use of an alternative date (May 8, 1991 instead of January 1, 1979) to distinguish between new and old storage tanks is acceptable because it conforms with the spirit of EPA's guidance. The January 1, 1979 date was used in the Stage I model rule found in EPA's April 1978 document, ''Regulatory Guidance for the Control of Volatile Organic Compound Emissions from 15 Categories of Stationary Sources,'' to grandfather existing tanks in newly regulated areas. Maryland used the May 8, 1991 because that was the effective date of the first amendments to this regulation made to comply with the RACT Fix-up requirements.

EPA is approving these SIP revisions without prior proposal because the Agency views them as noncontroversial amendments and anticipates no adverse comments. However, in a separate document in this **Federal Register** publication, EPA is proposing to approve the SIP revisions should adverse or critical comments be filed. This action will be effective on March 7, 1995 unless, within 30 days of publication, adverse or critical comments are received.

If EPA receives such comments, this action will be withdrawn before the effective date by publishing a subsequent notice that will withdraw the final action. All public comments received will then be addressed in a subsequent final rule based on this action serving as a proposed rule. EPA will not institute a second comment period on this action. Any parties interested in commenting on this action should do so at this time. If no such comments are received, the public is advised that this action will be effective on March 7, 1995.

As required by 40 CFR 51.102, the State of Maryland has certified that public hearings with regard to these revisions were held in Maryland on September 30, 1986 in Baltimore; on October 11, 1990 in Annapolis; on November 25, 1991 in Baltimore; on November 17, 18, and 20, 1992 in Frederick, Centreville, and Columbia, respectively; and on June 8, 1993 in Baltimore.

Final Action

Because these revisions comply with the RACT Fix-up and Catch-up requirements of section 182 of the Act, EPA is approving the amendments to Maryland's VOC RACT regulations, including Stage I. Specifically, EPA is approving amendments to COMAR 26.11.11.02, 26.11.11.04, 26.11.13.01, 26.11.13.02, 26.11.13.04, 26.11.13.07, 26.11.19.01, 26.11.19.02A, F and H, and 26.11.19.10. These revisions were submitted to EPA by the State of Maryland as SIP revisions on April 5, 1991, April 2, 1992, January 18, 1993, June 8, 1993, and July 19, 1993.

Nothing in this action should be construed as permitting or allowing or establishing a precedent for any future request for revision to any SIP. Each request for revision to the SIP shall be considered separately in light of specific technical, economic, and environmental factors and in relation to relevant statutory and regulatory requirements.

Under the Regulatory Flexibility Act, 5 U.S.C. 600 *et seq.*, EPA must prepare a regulatory flexibility analysis assessing the impact of any proposed or final rule on small entities. 5 U.S.C. 603 and 604. Alternatively, EPA may certify that the rule will not have a significant impact on a substantial number of small entities. Small entities include small businesses, small not-for-profit enterprises, and government entities with jurisdiction over populations of less than 50,000.

SIP approvals under section 110, and subchapter I, Part D of the Act do not create any new requirements but simply approve requirements that the state is already imposing. Therefore, because the federal SIP approval does not impose any new requirements, I certify that it does not have a significant impact on any small entities affected. Moreover, due to the nature of the federal-state relationship under the Act, preparation of a flexibility analysis would constitute federal inquiry into the economic reasonableness of State action. The Act forbids EPA to base its actions concerning SIPs on such grounds. *Union Electric Co.* v. *U.S. EPA*, 427 U.S. 246, 255–66 (1976); 42 U.S.C. 7410(a)(2).

This action has been classified as a Table 2 action for signature by the Regional Administrator under the procedures published in the **Federal Register** on January 19, 1989 (54 FR 2214–2225), as revised by an October 4, 1993 memorandum from Michael H. Shapiro, Acting Assistant Administrator for Air and Radiation. The OMB has exempted this regulatory action from E.O. 12866 review.

Under section 307(b)(1) of the Clean Air Act, petitions for judicial review of this action must be filed in the United States Court of Appeals for the appropriate circuit by March 7, 1995. Filing a petition for reconsideration by the Administrator of this final rule does not affect the finality of this rule for the purposes of judicial review nor does it extend the time within which a petition for judicial review may be filed, and shall not postpone the effectiveness of such rule or action. This action may not be challenged later in proceedings to enforce its requirements. (See section 307(b)(2).)

The Regional Administrator's decision to approve or disapprove the SIP revision, pertaining to Maryland's VOC RACT Catch-ups and Stage I Vapor Recovery, will be based on whether it meets the requirements of section 110(a)(2)(A)–(K), and Part D of the Clean Air Act, as amended, and EPA regulations in 40 CFR Part 51.

List of Subjects in 40 CFR Part 52

Environmental protection, Air pollution control, Hydrocarbons, Incorporation by reference, Intergovernmental relations, Ozone, Reporting and recordkeeping requirements.

Dated: October 19, 1994.

Peter H. Kostmayer,

Regional Administrator, Region III.

40 CFR part 52 is amended as follows:

PART 52—[AMENDED]

1. The authority citation for part 52 continues to read as follows:

Authority: 42 U.S.C. 7401–7671q.

Subpart V—Maryland

2. Section 52.1070 is amended by adding paragraphs (c) (110), (111), (112), (113), and (114) to read as follows:

§ 52.1070 Identification of plan.

* * * * *

(c) * * *

(110) Revisions to the Maryland State Implementation Plan submitted on April 5, 1991 by the Maryland Department of the Environment:

(i) Incorporation by reference.

(A) Letter of April 5, 1991 from the Maryland Department of the Environment transmitting additions, deletions, and revisions to Maryland's State Implementation Plan, pertaining to volatile organic compound regulations in Maryland's air quality regulations, Code of Maryland Administrative Regulations (COMAR) 26.11.

(B) The addition of COMAR 26.11.13.04, pertaining to loading

operations, adopted by the Secretary of the Environment on March 9, 1991, effective May 8, 1991.

(ii) Additional material.

(A) Remainder of April 5, 1991 State submittal pertaining to COMAR 26.11.13.04, loading operations.

(111) Revisions to the Maryland State Implementation Plan submitted on April 2, 1992 by the Maryland Department of the Environment:

(i) Incorporation by reference.

(A) Letter of April 2, 1992 from the Maryland Department of the Environment transmitting additions, deletions, and revisions to Maryland's State Implementation Plan, pertaining to volatile organic compound regulations in Maryland's air quality regulations, COMAR 26.11.

(B) Revisions to COMAR 26.11.13.04A(3), pertaining to test procedures for bulk gasoline terminals, adopted by the Secretary of the Environment on January 20, 1992, effective February 17, 1992.

(ii) Additional material.

(A) Remainder of April 2, 1992 State submittal pertaining to COMAR 26.11.13.04A(3), test procedures for bulk gasoline terminals.

(112) Revisions to the Maryland State Implementation Plan submitted on January 18, 1993 by the Maryland Department of the Environment:

(i) Incorporation by reference.

(A) Letter of January 18, 1993 from the Maryland Department of the Environment transmitting additions, deletions, and revisions to Maryland's State Implementation Plan, pertaining to volatile organic compound regulations in Maryland's air quality regulations, COMAR 26.11.

(B) Revisions to COMAR 26.11.13.04A(3), pertaining to test procedures for bulk gasoline terminals, adopted by the Secretary of the Environment on January 18, 1993, effective February 15, 1993.

(ii) Additional material.

(A) Remainder of January 18, 1993 State submittal pertaining to COMAR 26.11.13.04A(3), test procedures for bulk gasoline terminals.

(113) Revisions to the Maryland State Implementation Plan submitted on June 8, 1993 by the Maryland Department of the Environment:

(i) Incorporation by reference.

(A) Letter of June 8, 1993 from the Maryland Department of the Environment transmitting additions, deletions, and revisions to Maryland's State Implementation Plan, pertaining to volatile organic compound regulations in Maryland's air quality regulations, COMAR 26.11.

(B) The following revisions to the provisions of COMAR 26.11, adopted by the Secretary of the Environment on March 26, 1993, effective April 26, 1993:

(1) Amendments to COMAR 26.11.11.02B and C, pertaining to asphalt paving.

(2) Amendments to COMAR 26.11.13.01B(1), the definition for the term bulk gasoline plant.

(3) Amendments to COMAR 26.11.13.02, pertaining to applicability and exemptions.

(4) Amendments to COMAR 26.11.13.04, pertaining to loading operations.

(5) The addition of new COMAR 26.11.13.07, pertaining to plans for compliance.

(6) Amendments to COMAR 26.11.19.01B(4), the definition for the term major stationary source of VOC.

(7) Amendments to COMAR 26.11.19.02A, F, and H, pertaining to applicability, reporting and recordkeeping, and plans for compliance, respectively.

(8) Amendments to COMAR 26.11.19.10, pertaining to graphic arts.

(ii) Additional material.

(A) Remainder of June 8, 1993 State submittal pertaining to COMAR 26.11.11.02B and C, COMAR 26.11.13.01B(1), COMAR 26.11.13.02, COMAR 26.11.13.04, COMAR 26.11.13.07, COMAR 26.11.19.01B(4), COMAR 26.11.19.02A, F, and H, and COMAR 26.11.19.10.

(114) Revisions to the Maryland State Implementation Plan submitted on July 19, 1993 by the Maryland Department of the Environment:

(i) Incorporation by reference.

(A) Letter of July 19, 1993 from the Maryland Department of the Environment transmitting additions, deletions, and revisions to Maryland's State Implementation Plan, pertaining to volatile organic compound regulations in Maryland's air quality regulations, COMAR 26.11.

(B) Revisions to COMAR 26.11.13.04A, pertaining to bulk gasoline terminals, adopted by the Secretary of the Environment on June 25, 1993, effective July 19, 1993.

(ii) Additional material.

(A) Remainder of July 19, 1993 State submittal pertaining to COMAR 26.11.13.04A, bulk gasoline terminals.

[FR Doc. 95–286 Filed 1–5–95; 8:45 am]

BILLING CODE 6560–50–P

40 CFR Part 52

[Region II Docket No. 138, NY20–1–6729a, FRL–5124–5]

Approval and Promulgation of Implementation Plans; State of New York; Clean Fuel Fleet Opt Out

AGENCY: Environmental Protection Agency (EPA).

ACTION: Direct final rule.

SUMMARY: In this action, the Environmental Protection Agency (EPA) is announcing partial approval and partial disapproval of the State Implementation Plan submitted by the State of New York for the purpose of meeting the requirement to submit the Clean Fuel Fleet program (CFFP) or a substitute program that meets the requirements of the Clean Air Act. EPA is approving the State's plans for implementing a substitute program to opt out of the light duty vehicle portion of the CFFP and disapproving the State's commitment to adopt a CFFP for heavy duty vehicles at a future date.

DATES: This final rule is effective on March 7, 1995 unless adverse or critical comments are received by February 6, 1995. If the effective date is delayed, timely notice will be published in the **Federal Register**.

ADDRESSES: All comments should be addressed to:

William S. Baker, Chief, Air Programs Branch, Air and Waste Management Division, Environmental Protection Agency, Region II Office, 26 Federal Plaza, New York, New York 10278.

Copies of the state submittals are available at the following addresses for inspection during normal business hours:

Environmental Protection Agency, Air Docket 6102, 401 M Street, SW., Washington, DC 20460.

Environmental Protection Agency, Region II Office, Air Programs Branch, 26 Federal Plaza, Room 1034A, New York, New York 10278.

New York State Department of Environmental Conservation, Division of Air Resources, 50 Wolf Road, Albany, New York 12233.

FOR FURTHER INFORMATION CONTACT: Michael P. Moltzen, Environmental Engineer, Technical Evaluation Section, Air Programs Branch, Environmental Protection Agency, 26 Federal Plaza, Room 1034A, New York, New York 10278, (212) 264–2517.

SUPPLEMENTARY INFORMATION:

I. Background

Section 182(c)(4)(A) of the Clean Air Act requires certain States, including

New York, to submit for EPA approval a State Implementation Plan (SIP) revision that includes measures to implement the Clean Fuel Fleet program (CFFP). Under this program, a certain specified percentage of vehicles purchased by fleet operators for covered fleets must meet emission standards that are more stringent than those that apply to conventional vehicles. Covered fleets are defined as fleets of 10 or more vehicles that are centrally fueled or capable of being centrally fueled. The program applies in the New York portion of the New York-Northern New Jersey-Long Island nonattainment area beginning in 1999. Section 182(c)(4)(B) of the Act allows states to ''opt out'' of the CFFP by submitting for EPA approval a SIP revision consisting of a program or programs that will result in at least equivalent long term reductions in ozone-producing and toxic air emissions as achieved by the CFFP. The Clean Air Act directs EPA to approve a substitute program if it achieves long-term reductions in emissions of ozone-producing and toxic air pollutants equivalent to those that would have been achieved by the CFFP or the portion of the CFFP for which the measure is to be substituted.

The State of New York submitted on November 13, 1992 a SIP revision which committed it to submit a substitute program or programs in lieu of the CFFP, or the CFFP itself, by May 15, 1994. Prior to EPA action on New York's commitment, the Court of Appeals for the District of Columbia ruled that EPA's conditional approval policy in general was contrary to law. [*NRDC* v. *EPA*, 22 F.3d. 1125 (D.C. Cir. 1994)]. The court held that a bare commitment from a state was not sufficient to warrant conditional approval from EPA under section 110(k)(4) of the Act. Therefore, following this decision, EPA could not approve New York's commitment of November 1992.

However, in fashioning a remedy for EPA's improper use of it's conditional approval authority, the *NRDC* Appellate court did not want to penalize the states for their reliance on EPA's actions. EPA also does not believe that New York should lose its opportunity to opt out of the CFFP with a substitute program that meets the requirements of section 182(c)(4)(B) because of EPA's failure to act on New York's commitment, especially since New York has, in reliance on EPA advice, submitted such a substitute program for EPA approval prior to any EPA action on the commitment.

Therefore, EPA will consider all submissions made thus far by the State that are intended to substitute for the CFFP, including that of May 15, 1994 which transmitted the New York State Code of Rules and Regulations Part 218, the State's low emission vehicle program and the submission of August 9, 1994, supplementing the May 1994 submittal, in conjunction with the November 1992 commitment.

The Act requires states to observe certain procedural requirements in developing implementation plan revisions for submission to EPA. Sections 110(a)(2) and 172(c)(7) of the Act require states to provide reasonable notice and opportunity for public comment before accepting the submitted measures. Section 110(1) of the Act also requires states to provide reasonable notice and hold a public hearing before adopting SIP provisions.

EPA must also determine whether a state's submittal is complete before taking further action on the submittal. See section 110(k)(1). EPA's completeness criteria for SIP submittals are set out in 40 CFR Part 51, Appendix V (1993).

II. State Submittal

New York submitted a SIP revision on May 15, 1994 (and supplemented it on August 9, 1994) which substituted a low emission vehicle (LEV) program for the light duty vehicle portion of the CFFP. The State adopted the LEV program, New York's Part 218, ''Emission Standards for Motor Vehicles and Motor Vehicle Engines,'' on April 28, 1992. New York held public hearings on February 8 and 9, 1993 and on January 11, 1994 to entertain public comment on its 1992 and 1993 SIP revisions, respectively; these hearings included the State's proposal to opt out of the CFFP with LEV as a substitute program. EPA reviewed the State's submission for completeness, in accordance with the completeness criteria, and on September 1, 1994 found the submittals to be complete. EPA notified New York in writing of this finding.

New York's submittal divides the CFFP into two separate requirements; that portion which applies to light duty fleet vehicles, and a second requirement for heavy duty fleet vehicles. This interpretation is provided for in sections 182 and 246 of the Clean Air Act (see part III. of this notice, ''Analysis of State Submission''). The State exercised its choice to substitute enough emission reduction credit from its LEV program for the light duty portion of the CFFP. New York has not submitted a substitute for the heavy duty portion of the CFFP. Nor has the State adopted the heavy duty fleet program.

III. Analysis of State Submission

Section 182(c)(4) of the Clean Air Act, which allows states required to implement a CFFP to ''opt out'' of the program by submitting a SIP revision consisting of a substitute program, requires that the substitute program result in emission reductions equal to or greater than does the CFFP. Also, EPA can only approve such substitute programs that consist exclusively of provisions other than those required under the Clean Air Act for the area. New York's LEV program satisfies both of these requirements as they pertain to the light duty portion of the fleet program.

Section 182(c)(4)(B) states that a measure can be substituted for all or a portion of the CFFP, and such a substitute program will be approvable if it achieves long-term emission reductions equivalent to those that would have been achieved by the portion of the CFFP for which the measure is to be substituted. Section 246 implies that the CFFP can be subdivided into a light duty vehicle portion (up to 8,500 pounds gross vehicle weight rating (GVWR)) and a heavy duty vehicle portion (from 8,501 pounds GVWR to 26,000 pounds GVWR). This is made apparent most notably by section 246(f)(2)(B), which restricts the use of Clean Fuel Fleet credits generated for either light or heavy duty fleet vehicles to those classes, respectively. Credit trading between weight classes is prohibited.

In recognizing the severable nature of the CFFP, New York has chosen to submit a substitute measure, the State's LEV program, that is intended to substitute for only the light duty portion of the CFFP. The State must therefore implement a heavy duty CFFP which also complies with section 246 of the Clean Air Act. New York is currently required by state law to adopt and implement a heavy duty fleet program and consequently has not chosen to opt-out of the heavy duty portion of the CFFP. However, the State has not yet adopted a heavy duty fleet program (New York's Clean Air Compliance Act called for adoption of the heavy duty fleet program by May 15, 1994).

New York, in exercising its option under section 177 of the Clean Air Act, has adopted a LEV program which affects all new light duty vehicles, specifically passenger cars and light duty trucks under 6,000 lbs. GVWR for vehicle model years 1994 and later. The LEV program is a far reaching, technology-forcing program designed to improve the emissions performance of vehicles over a long period of time. The

LEV program sets forth five different sets of emission standards, and vehicle manufacturers may market any combination of vehicles provided that the annual average emissions of each manufacturer's fleet complies with a fleet average limit that becomes more stringent each year. In addition, New York's LEV program requires manufacturers to begin to market a fixed percentage of zero emission vehicles (ZEVs) in model year 1998. The ZEV requirement will help assure that the LEV program will achieve a significant amount of ozone forming emission reductions, beyond those achieved by the light duty portion of the CFFP.

New York's LEV program will assure reductions of ozone-forming and air toxics emissions that are at least equivalent to those that would be realized through the light duty portion of a CFFP. Moreover, a light duty CFFP would affect a much smaller subset of vehicles than the LEV program, since the fleet vehicles affected by the CFFP would be limited to a set yearly percentage of new vehicles purchased by fleet operators of covered fleets, restricted to the New York State portion of the New York-Northern New Jersey-Long Island nonattainment area. The LEV program is a statewide program affecting the sale of all light duty vehicles. The LEV program has fleet average emission standards that are comparable to those established by the Clean Air Act for clean fuel fleet vehicles in the CFFP. With respect to long term emission standards for non-methane organic gases (NMOG), the CFFP requires that 70% of new light duty fleet vehicles purchased annually in covered fleets have a standard of 0.075 grams per mile (model year 2000 and later), while the LEV program requires that the long term NMOG standard for 100% of all light duty vehicles be no more than 0.062 grams per mile (model year 2003 and later).

While New York's LEV program does not cover vehicles in the weight class range of 6,000 to 8,500 pounds GVWR, in its SIP revision New York states that it will dedicate enough ozone forming and toxic emission reduction credit as is necessary to fully substitute for the entire light duty portion of the CFFP. Also, while the light duty portion of the CFFP covers the 6,000 to 8,500 pound vehicle range, the State still plans to adopt and implement a heavy duty fleet program, as required by its Clean Air Compliance Act, which will include this vehicle weight range.

The Clean Air Act also requires New York to adopt a CFFP that applies to heavy duty vehicles. The long term emission standard for heavy duty vehicles participating in the CFFP, independent of fuel type, is a combined non-methane hydrocarbon (NMHC) plus nitrogen oxide (NOx) standard of 3.8 grams per brake horsepower hour. This is about a 50 percent reduction from 1994 heavy duty diesel engine requirements and would apply to 50 percent of affected heavy duty fleet vehicles for model year 2000 and later. New York has not yet adopted a heavy duty CFFP, nor has it submitted an adequate substitute measure for the heavy duty portion of the CFFP. Although the State has legislative authority to adopt and implement the heavy duty fleet program, EPA may not approve a revision that lacks adopted measures.

As a result of these deficiencies, EPA finds, pursuant to 40 CFR section 52.31(c)(2), that New York has failed to meet one or more of the elements of submission required by the Act.

This notice initiates the sanction process, mandated by section 179(a)(2) of the Clean Air Act, as a result of the partial disapproval of the New York SIP described in this notice. Section 179(b) of the Clean Air Act prescribes certain mandatory sanctions that the Administrator must impose upon a finding that a SIP revision submitted by a state is not approvable. The two sanctions identified in the Clean Air Act are: a requirement for a two-for-one emissions offsets in nonattainment areas for construction of major new and modified sources, and a cutoff of federal funding for certain highway projects. The Administrator must impose the first sanction no later than eighteen months of the date of the finding if the deficiency has not been corrected and the second sanction no later than six months thereafter. The offset sanction would apply at eighteen months and the highway funding sanction at twenty-four months, although the Administrator can change the sequence of the sanctions and accelerate their effective date.

EPA, auto manufacturers, and states are currently considering the possibility of developing a voluntary national LEV-equivalent motor vehicle emission control program. *See* 59 FR 48664 (9/22/94) and 59 FR 53396 (10/24/94). EPA does not expect that this approval will impede the development or implementation of such a program. If New York were to participate in a LEV-equivalent program, it would have the opportunity to revise its clean fuel fleet substitute program.

IV. Summary of Action

In this rule, EPA is taking final action to partially approve and partially disapprove New York's SIP revision submitted to fulfill the Clean Fuel Fleet requirements of the Clean Air Act. The State's adopted Part 218 implementing the low emission vehicle program is an adequate substitute for the light duty vehicle portion of the CFFP under section 182(c)(4).

The State has failed to fulfill the requirement to submit the remaining portion of the CFFP, the heavy duty vehicle portion. EPA is disapproving this portion of the State's submittal because it does not consist of a State-adopted regulation.

Nothing in this rule should be construed as permitting or allowing or establishing a precedent for any future request for revision to any SIP. Each request for revision to any SIP shall be considered separately in light of specific technical, economic, and environmental factors and in relation to relevant statutory and regulatory requirements.

EPA is publishing this rule without prior proposal because EPA views this as a noncontroversial amendment and anticipates no adverse comments. However, in a separate document in this **Federal Register** publication, the EPA is proposing a notice and comment period to allow for adverse or critical comments to be considered. Thus, this direct final action will be effective March 7, 1995 unless, by February 6, 1995, adverse or critical comments are received.

If the EPA receives such comments, this rule will be withdrawn before the effective date by publishing a subsequent notice that will withdraw the final action. All public comments received will then be addressed in a subsequent final rule based on this action serving as a proposed rule. The EPA will not institute a second comment period on this action. Any parties interested in commenting on this rule should do so at this time. If no adverse comments are received, the public is advised that this rule will be effective March 7, 1995. (See 47 FR 27073 and 59 FR 24059).

Under the Regulatory Flexibility Act, 5 U.S.C. 600 et. seq., EPA must prepare a regulatory flexibility analysis assessing the impact of any proposed or final rule on small entities (5 U.S.C. 603 and 604). Alternatively, EPA may certify that the rule will not have a significant impact on a substantial number of small entities. Small entities include small businesses, small not-for-profit enterprises, and government entities with jurisdiction over populations of less than 50,000.

SIP approvals under section 110 and subchapter I, part D of the Clean Air Act do not create any new requirements, but

simply approve requirements that the State is already imposing. Therefore, because the federal SIP-approval does not impose any new requirements, I certify that it does not have a significant impact on any small entities affected. Moreover, due to the nature of the federal-state relationship under the Clean Air Act, preparation of a regulatory flexibility analysis would constitute federal inquiry into the economic reasonableness of state action. The Clean Air Act forbids EPA to base its actions concerning SIPs on such grounds. *Union Electric Co.* v *US EPA*, 427 US 246, 256–66 (S.Ct. 1976); 42 U.S.C. 7410(a)(2).

The Office of Management and Budget has exempted this action from review under Executive Order 12866.

This rule may be withdrawn by EPA pursuant to procedures described in this **Federal Register** notice. Before filing a petition for review, potential petitioners under section 307(b)(1) of the Act are cautioned to determine whether EPA has withdrawn the rule.

Under section 307(b)(1) of the Act, petitions for judicial review of this rule must be filed in the United States Court of Appeals for the appropriate circuit within 60 days from date of publication. Filing a petition for reconsideration by the Administrator of this final rule does not affect the finality of this rule for the purposes of judicial review nor does it extend the time within which a petition for judicial review may be filed and shall not postpone the effectiveness of such rule or action. This rule may not be challenged later in proceedings to enforce its requirements. (See 307(b)(2)).

List of Subjects in 40 CFR Part 52

Air pollution control, Incorporation by reference, Nitrogen dioxide, Ozone, Volatile organic compounds.

Dated: November 21, 1994.

William J. Muszynski,

Acting Regional Administrator.

Part 52, chapter I, title 40 of the Code of Federal Regulations is amended as follows:

PART 52—[AMENDED]

1. The authority citation for part 52 continues to read as follows:

Authority: 42 U.S.C. 7401–7671q.

Subpart HH—New York

2. Section 52.1670 is amended by adding new paragraph (c)(88) to read as follows:

§ 52.1670 Identification of plan.

* * * * *

(c) * * *

(88) Revision to the New York State Implementation Plan (SIP) for ozone, submitting a low emission vehicle program for a portion of the Clean Fuel Fleet program, dated May 15, 1994 and August 9, 1994 submitted by the New York State Department of Environmental Conservation (NYSDEC).

(i) Incorporation by reference. Part 218, ''Emission Standards for Motor Vehicles and Motor Vehicle Engines,'' effective May 28, 1992.

(ii) Additional material.

May 1994 NYSDEC Clean Fuel Fleet Program description.

3. Section 52.1679 is amended by adding, in numerical order, a new entry Part 218 to the table to read as follows:

§ 52.1679 EPA-approved New York State regulations.

New York State regulation	State effective date	Latest EPA approval date	Comments
*	*	*	*
Part 218 ''Emission Standards for Motor Vehicles and Motor Vehicle Engines''.	5/28/92	January 6, 1995 [60 FR 2025]	
*	*	*	*

[FR Doc. 95–288 Filed 1–5–95; 8:45 am]

BILLING CODE 6560–50–P

40 CFR Part 52

[CA 71–7–6801; FRL–5120–5]

Approval and Promulgation of Implementation Plans; California State Implementation Plan Revision, Santa Barbara County Air Pollution Control District and San Diego County Air Pollution Control District

AGENCY: Environmental Protection Agency (EPA).

ACTION: Final rule.

SUMMARY: EPA is finalizing the approval of revisions to the California State Implementation Plan (SIP) proposed in the **Federal Register** on June 14, 1994. The revisions concern rules from the following districts: Santa Barbara County Air Pollution Control District (SBCAPCD) and San Diego County Air Pollution Control District (SDCAPCD). This approval action will incorporate these rules into the federally approved SIP. The intended effect of approving these rules is to regulate emissions of volatile organic compounds (VOCs) in accordance with the requirements of the Clean Air Act, as amended in 1990 (CAA or the Act). The revised rules control VOC emissions from polyester resin operations. Thus, EPA is finalizing the approval of these revisions into the California SIP under provisions of the CAA regarding EPA action on SIP submittals, SIPs for national primary and secondary ambient air quality standards and plan requirements for nonattainment areas.

EFFECTIVE DATE: This final rule is effective on February 6, 1995.

ADDRESSES: Copies of the submitted rules and EPA's evaluation report for each rule are available for public inspection at EPA's Region IX office during normal business hours. Copies of the submitted rule revisions are available for inspection at the following locations:

Rulemaking Section (A–5–3), Air and Toxics Division, U.S. Environmental Protection Agency, Region IX, 75 Hawthorne Street, San Francisco, CA 94105

Environmental Protection Agency, Jerry Kurtzweg ANR 443, 401 ''M'' Street, SW., Washington, DC 20460

Santa Barbara County Air Pollution Control District, 26 Castilian Drive, B–23 Goleta, CA 93117

San Diego County Air Pollution Control District, 9150 Chesapeake Drive, San Diego, CA 92123–1096

FOR FURTHER INFORMATION CONTACT: Christine Vineyard, Rulemaking Section, Air and Toxics Division, U.S. Environmental Protection Agency, Region IX, 75 Hawthorne Street, San Francisco, CA 94105, Telephone: (415) 744–1197.

SUPPLEMENTARY INFORMATION:

Background

On June 14, 1994 in 59 FR 30562, EPA proposed to approve the following rules into the California SIP: SBCAPCD's Rule

349, Polyester Resin Operations; and SDCAPCD's Rule 67.12, Polyester Resin Operations. SBCAPCD adopted Rule 349 on April 27, 1993 and SDCAPCD adopted Rule 67.12 on April 6, 1993. Both rules were submitted by the California Air Resources Board (CARB) on November 18, 1993. These rules were submitted in response to EPA's 1988 SIP-Call and the CAA section 182(a)(2)(A) requirement that nonattainment areas fix their reasonably available control technology (RACT) rules for ozone in accordance with EPA guidance that interpreted the requirements of the pre-amendment Act. A detailed discussion of the background for each of the above rules and nonattainment areas is provided in the NPRM cited above.

EPA has evaluated all of the above rules for consistency with the requirements of the CAA and EPA regulations and EPA interpretation of these requirements as expressed in the various EPA policy guidance documents referenced in the NPRM cited above. EPA has found that the rules meet the applicable EPA requirements. A detailed discussion of the rule provisions and evaluations has been provided in 59 FR 30562 and in technical support documents (TSDs) available at EPA's Region IX office (TSDs dated February 28, 1994—SBCAPCD Rule 349 and March 1, 1994—SDCAPCD 67.12).

Response to Public Comments

A 30-day public comment period was provided in 59 FR 30562. No comments were received.

EPA Action

EPA is finalizing action to approve the above rules for inclusion into the California SIP. EPA is approving the submittal under section 110(k)(3) as meeting the requirements of section 110(a) and Part D of the CAA. This approval action will incorporate these rules into the federally approved SIP. The intended effect of approving these rules is to regulate emissions of VOCs in accordance with the requirements of the CAA.

Nothing in this action should be construed as permitting or allowing or establishing a precedent for any future request for revision to any state implementation plan. Each request for revision to the state implementation plan shall be considered separately in light of specific technical, economic, and environmental factors and in relation to relevant statutory and regulatory requirements.

Regulatory Process

The OMB has exempted this action from review under Executive Order 12866.

List of Subjects in 40 CFR Part 52

Environmental protection, Air pollution control, Hydrocarbons, Incorporation by reference, Intergovernmental relations, Ozone, Reporting and recordkeeping requirements, Volatile organic compounds.

Note: Incorporation by reference of the State Implementation Plan for the State of California was approved by the Director of the Federal Register on July 1, 1982.

Dated: December 1, 1994.

Nora L. McGee,

Acting Regional Administrator.

Part 52, chapter I, title 40 of the Code of Federal Regulations is amended as follows:

PART 52—[AMENDED]

1. The authority citation for part 52 continues to read as follows:

Authority: 42 U.S.C. 7401–7671q.

Subpart F—California

2. Section 52.220 is amended by adding paragraphs (c) (194)(i)(D) and (E) to read as follows:

§ 52.220 Identification of plan.

* * * * *

(c) * * *

(194) * * *

(i) * * *

(D) Santa Barbara County Air Pollution Control District.

(*1*) Rule 349, adopted on April 27, 1993.

(E) San Diego County Air Pollution Control District.

(*1*) Rule 67.12, adopted on April 6, 1993.

* * * * *

[FR Doc. 95–291 Filed 1–5–95; 8:45 am]

BILLING CODE 6560–50–P

---

40 CFR Parts 52 and 81

[AL 38–1–6571a; FRL–5123–8]

Clean Air Act Approval and Promulgation of Redesignation of the Leeds Area of Jefferson County, Alabama, to Attainment for Lead

AGENCY: Environmental Protection Agency (EPA).

ACTION: Direct final rule.

SUMMARY: EPA is approving the State Implementation Plan (SIP) submitted by the State of Alabama through the Alabama Department of Environmental Management (ADEM) for the purpose of redesignating the Leeds area of Jefferson County from nonattainment to attainment status for the National Ambient Air Quality Standard (NAAQS) for lead. The maintenance plan was submitted by the State to satisfy the federal requirements necessary to redesignate an area from nonattainment to attainment.

DATES: This final rule is effective on March 7, 1995 unless adverse or critical comments are received by February 6, 1995. If the effective date is delayed, timely notice will be published in the **Federal Register**.

ADDRESSES: Comments may be mailed to Kimberly Bingham at the EPA Region 4 address listed. Copies of the material submitted by ADEM may be examined during normal business hours at the following locations:

Air and Radiation Docket and Information Center (Air Docket 6102), U.S. Environmental Protection Agency, 401 M Street, SW., Washington, DC 20460.

Environmental Protection Agency, Region 4 Air Programs Branch, 345 Courtland Street, Atlanta, Georgia 30365.

Alabama Department of Environmental Management, Office of General Counsel, 1751 Cong. W. L. Dickinson Drive, Montgomery, Alabama 36130.

FOR FURTHER INFORMATION CONTACT: Kimberly Bingham, Regulatory Planning and Development Section, Air Programs Branch, Air Pesticides and Toxics Management Division, Region 4 Environmental Protection Agency, 345 Courtland Street, NE., Atlanta, Georgia 30365. The telephone number is (404) 347–3555 extension 4195.

SUPPLEMENTARY INFORMATION: On January 6, 1992, the Leeds area of Jefferson County was designated nonattainment for lead. Since then the major source of lead emissions in the area, a facility operated by International Lead Company (ILCO) has permanently closed, and monitoring data from the area demonstrates that the area has attained the NAAQS for lead. Section 107(d)(3)(E) of the Clean Air Act (CAA) permits nonattainment areas that have attained the lead NAAQS to be redesignated attainment provided certain criteria are met. Consequently, the State of Alabama submitted a request to redesignate the Leeds area to attainment on July 16, 1993.

Section 107(d)(3)(E) of the CAA, as amended in 1990, sets forth the requirements that must be met for a nonattainment area to be redesignated to attainment. It states that an area can be

redesignated to attainment if the following conditions are met.

1. The EPA has determined that the NAAQS for lead has been attained.

2. The applicable implementation plan has been fully approved by EPA under section 110(k).

3. The EPA has determined that the improvement in air quality is due to permanent and enforceable reductions in emissions.

4. The State has met all applicable requirements for the area under section 110 and part D.

5. The EPA has fully approved a maintenance plan, including a contingency plan, for the area under section 175A.

On March 3, 1992, ILCO, the source of emissions that led to the lead nonattainment designation for the Leeds area, was permanently shut down and dismantled. On May 3, 1993, the State of Alabama through ADEM submitted a request to redesignate the Leeds area of Jefferson County from nonattainment to attainment status for lead. Because the May 3, 1993, submittal was not complete and it did not adequately address all of the requirements, EPA recommended that the request be withdrawn and a complete SIP package be submitted. On December 8, 1993, in a letter from Mr. James W. Warr to Mr. Patrick Tobin, ADEM withdrew the May 3, 1993, package. A second submittal dated July 16, 1993, was received by EPA, along with a request for parallel processing. The request for parallel processing was based upon the fact that the maintenance plan did not become state effective until after the public hearing, August 18, 1993. The State did not receive any adverse comments during the public hearing or the 30 day comment period.

On September 28, 1993, the effective SIP revisions were submitted by ADEM revising the request to redesignate the Leeds area of Jefferson County from nonattainment to attainment for lead. A letter of completeness was mailed on October 7, 1993, to Mr. Richard E. Grusnick from Mr. Winston A. Smith for the revised submittal. The State of Alabama redesignation request for the Leeds area of Jefferson County meets the requirements of Section 107(d)(3)(E). The following is a description of how each requirement has been achieved.

1. Attainment of the Lead NAAQS

To demonstrate that the Leeds area is in attainment with the NAAQS for lead, ADEM included air quality data for the years 1991–1993 in the submittal. No exceedances of the lead standard have occurred since the ILCO shutdown on March 6, 1992. This amount of monitoring data (more than 11 consecutive quarters at the present time) without an exceedance of the lead standard is adequate to demonstrate attainment of the standard. Modeling is also required to redesignate an area to attainment. The EPA believes that the EPA approved 1988 SIP, which included a modeling analysis which satisfies this requirement. The State of Alabama will continue to monitor the air quality of the Leeds area to verify attainment status and continued maintenance.

2. The Area Has Met All Applicable Requirements Under Section 110 and Part D of the CAA

To be redesignated to attainment, section 107(d)(3)(E) requires that an area must have met all applicable requirements of section 110 of part D of title I of the CAA. EPA interprets section 107(d)(3)(E)(v) to mean that for a redesignation request to be approved, the State must have met all requirements that applied to the subject area prior to or at the time of a complete redesignation request. Requirements of the CAA that come due subsequently continue to be applicable to the area at those later dates (see section 175A(c)) and, if the redesignation is disapproved, the State remains obligated to fulfill those requirements. Therefore, for purposes of redesignation, to meet the requirement that the SIP meet all applicable requirements under the CAA, EPA has reviewed the Leeds SIP to ensure that it satisfies all requirements due under the CAA prior to or at the time the State of Alabama submitted its redesignation request (i.e., July 16, 1993).

A. Section 110 Requirements

On October 28, 1988, EPA fully approved Alabama's SIP for the Leeds area of Jefferson County as meeting the requirements of section 110 of the 1977 CAA (see 52 FR 47686). Although section 110 was amended by the Clean Air Act Amendments (CAAA) of 1990, EPA has reviewed the Leeds SIP and believes that it meets the requirements of the section 110(a)(2).

B. Part D Requirements

Before a lead nonattainment area may be redesignated to attainment, the State must have fulfilled the applicable requirements of part D. Subpart 1 of part D establishes the general requirements applicable to all nonattainment areas and subpart 5 of part D establishes certain requirements applicable to lead nonattainment areas. Section 191(a) required the submission of nonattainment SIPs meeting the requirements of part D for areas designated nonattainment for lead after the 1990 CAAA, such as Leeds, within 18 months of the designation. As Leeds was designated nonattainment on January 6, 1992, its part D SIP was due on July 6, 1993, a date preceding the submission of the complete redesignation request for the area. Thus, to be redesignated, the Leeds area SIP must satisfy the requirements of part D applicable to lead nonattainment areas. These requirements include section 192(a)'s requirement that the SIP provide for attainment as expeditiously as practicable but no later than 5 years from the date of the nonattainment designation and the requirements of section 172(c). The EPA has reviewed the SIP submission from the State of Alabama and determined that it meets all of the relevant requirements.

The requirements of sections 172(c) and 192(a) for providing for attainment of the lead NAAQS, and the requirements of section 172(c) for requiring reasonable further progress (RFP), and the imposition of reasonably available control measures (RACM) have been satisfied through the permanent closure of the ILCO facility and the demonstration that the area is now attaining the standard. The EPA notes that the ILCO facility has been dismantled and its permit revoked. Moreover, section 172(c)(9) contingency measures are not required as the area is attaining the standard. See General Preamble for the Implementation of Title I, 57 FR 13498, 13564 (April 16, 1992).

The State of Alabama has submitted an emissions inventory for 1992 that fulfills the emissions inventory requirements of section 172(c)(3). Consequently, that requirement has been satisfied.

With respect to the requirement that an area seeking redesignation must have submitted and received full approval of a part D New Source Review (NSR) program required by section 172(c)(5), EPA has determined that, if an area seeking redesignation demonstrates maintenance of the standard without a part D NSR program, such a program need not be adopted and approved in order for the area to be redesignated. (See the memorandum from Mary Nichols, Assistant Administrator for Air and Radiation to Air Division Directors, October 14, 1994). As the State of Alabama has demonstrated that the Leeds area will maintain the lead standard with a part C PSD program, rather than a part D NSR program, in place, the requirement for having a fully approved part D NSR program need not

be fulfilled for the Leeds area to be redesignated to attainment.

3. Permanent and Enforceable Improvement in Air Quality

ADEM provided a copy of the revoked air permit dated March 4, 1992, from the Jefferson County Department of Health, Air Pollution Program, proving that ILCO, the major source of lead emissions had ceased operation and was dismantled. Based on 1992 data, ILCO was responsible for almost 80 percent of the lead emissions for the Leeds nonattainment area. The total lead emissions identified in the 1992 inventory from the Leeds area that remained after the ILCO shutdown are 2.63 tons per year emitted from ACME Packaging. Since the ILCO facility has ceased operation and has been dismantled, the improvement in air quality resulting in attainment of the standard is permanent and enforceable. Monitoring will continue in the Leeds area ensuring that the lead NAAQS continues to be maintained.

4. Maintenance Plan

Section 175(A) of the CAA requires states that submit a redesignation request for a nonattainment area under section 107(d) to include a maintenance plan to ensure that the attainment of NAAQS for any pollutant is maintained. The plan must demonstrate continued attainment of the applicable NAAQS for at least ten years after the approval of a redesignation to attainment. Eight years after the redesignation, the State must submit a revised maintenance plan demonstrating attainment for the ten years following the initial ten year period. To provide for the possibility of future NAAQS violations, the maintenance plan must contain such contingency measures as the Administrator deems necessary to assure that the State will promptly correct any violation of the standard that occurs after redesignation. The contingency provisions are to include a requirement that the State will implement all measures for controlling the air pollutant concerned that were contained in the SIP prior to redesignation.

The State of Alabama through ADEM has submitted a maintenance plan to ensure that the lead NAAQS is protected. The maintenance plan for the Leeds area of Jefferson County, Alabama is comprised of a base year emissions inventory, a maintenance demonstration and the part C PSD program. The EPA believes that this submittal is adequate for the Leeds area.

The State has demonstrated that the lead standard will be maintained. The ILCO facility, the only major lead source that existed in Leeds, has been permanently closed and dismantled. The only remaining lead emissions source is ACME Packaging, which has emissions well below the 5 ton per year threshold for being classified as a lead point source (40 CFR 51.100(k)). Since ACME Packaging is not considered a point source under EPA's regulations it is not even required to meet RACM requirements. As previously discussed, the Leeds area has been in continuous attainment of the lead standard since the closure of the ILCO facility, and EPA believes, based on the low monitored levels of lead emissions, which are well below the NAAQS, that the Leeds area will continue to remain in attainment notwithstanding the existence of continued emissions from ACME Packaging's facility. The applicability of the State's fully approved part C PSD program, which establishes permitting requirements for any new sources with the potential to emit 0.6 tons per year of lead, provides adequate assurance that the NAAQS will continue to be attained during the maintenance period.

The EPA does not believe any additional contingency measures are needed. The lead emissions from the ACME Packaging facility are so low that EPA does not believe it reasonable to expect that they could cause a violation of the NAAQS. Nevertheless, monitoring of the Leeds area will continue and appropriate actions could be taken in the event of a violation of the standard.

With respect to the requirement of section 175A that the contingency provisions of a maintenance plan include all control measures previously contained in the SIP, EPA believes that the requirement is satisfied in this instance even though the State is not carrying forward as contingency measures the source-specific control requirements previously applicable to the ILCO facility. Carrying forward those requirements as contingency measures would serve no useful purpose in light of the permanent closure of that facility and the revocation of its permit. Moreover, any attempt to reopen a facility on the same site would be subject to the permitting requirements of the State's preconstruction review program.

Final Action

In this action, EPA is approving the redesignation of the Leeds area to attainment for lead and the accompanying SIP revision submitted by the State of Alabama, because EPA believes that Alabama has addressed all of the requirements of the CAA and the culpable lead source has been permanently shut down. This action is being taken without prior proposal because the changes are noncontroversial and EPA anticipates no significant comments on them. The public should be advised that this action will be effective March 7, 1995. However, if adverse or critical comments are received by February 6, 1995, this action will be withdrawn and two subsequent documents will be published before the effective date. One document will withdraw the final action. The second document will be the final rulemaking notice which will address the comments received.

Under section 307(b)(1) of the CAA, 42 U.S.C. 7607 (b)(1), petitions for judicial review of this action must be filed in the United States Court of Appeals for the appropriate circuit by March 7, 1995. Filing a petition for reconsideration by the Administrator of this final rule does not affect the finality of this rule for purposes of judicial review nor does it extend the time within which a petition for judicial review may be filed, and shall not postpone the effectiveness of such rule or action. This action may not be challenged later in proceedings to enforce its requirements. [See section 307(b)(2) of the CAA, 42 U.S.C. 7607 (b)(2)].

This action has been classified as a Table 2 action by the Regional Administrator under the procedures published in the **Federal Register** on January 19, 1989, (54 FR 2214–2225), as revised by an October 4, 1993, memorandum from Michael Shapiro, Acting Assistant Administrator for Air and Radiation. A future document will inform the general public of these tables. On January 6, 1989, the Office of Management and Budget (OMB) waived Table 2 and 3 SIP revisions (54 FR 2222) from the requirements of Section 3 of Executive Order 12291 for two years. The USEPA has submitted a request for a permanent waiver for Table 2 and Table 3 SIP revisions. The OMB has agreed to continue the temporary waiver until such time as it rules on EPA's request. This request continues in effect under Executive Order 12866 which superseded Executive Order 12291 on September 30, 1993.

Under the Regulatory Flexibility Act, 5 U.S.C. 600 *et seq.*, EPA must prepare a regulatory flexibility analysis assessing the impact of any proposed or final rule on small entities. 5 U.S.C. 603 and 604. Alternatively, EPA may certify that the rule will not have a significant impact on a substantial number of small entities. Small entities include small businesses, small not-for-profit

enterprises, and government entities with jurisdiction over populations of less than 50,000.

SIP approvals under section 110 and subchapter I, part D of the CAA do not create any new requirements, but simply approve requirements that the state is already imposing. Therefore, because the federal SIP-approval does not impose any new requirements, I certify that it does not have a significant impact on any small entities affected. Moreover, due to the nature of the federal-state relationship under the CAA, preparation of a regulatory flexibility analysis would constitute federal inquiry into the economic reasonableness of state action. The CAA forbids EPA to base its actions concerning SIPs on such grounds. *Union Electric Co.* v. *U.S. E.P.A.*, 427 U.S. 246, 256–66 (S.Ct. 1976); 42 U.S.C. 7410(a)(2).

Redesignation of an area to attainment under section 107(d)(3)(e) of the CAA does not impose any new requirements on small entities. Redesignation is an action that affects the status of a geographical area and does not impose any regulatory requirements on sources. The Administrator certifies that the approval of the redesignation request will not affect a substantial number of small entities.

List of Subjects

40 CFR Part 52

Environmental protection, Air pollution control, Incorporation by reference, Intergovernmental relations, Lead.

40 CFR Part 81

Air pollution control.

Dated: December 7, 1994.

Patrick M. Tobin,

Acting Regional Administrator.

Chapter I, title 40 of the *Code of Federal Regulations*, is amended as follows:

PART 52—[AMENDED]

1. The authority citation for part 52 continues to read as follows:

Authority: 42.U.S.C. 7401–7671q.

Subpart—B Alabama

2. Section 52.50 is amended by adding paragraph (c)(66) to read as follows:

§ 52.50 Identification of plan.

* * * * *

(c) * * *

(66) The Alabama Department of Environmental Management has submitted revisions to Alabama SIP on September 28, 1993. These revisions address the requirements necessary to change the Leeds area of Jefferson County, Alabama, from nonattainment to attainment for lead. The submittal includes the maintenance plan for the Leeds Area.

(i) Incorporation by reference.

(A) Plan for Maintenance of the NAAQS for Lead in the Jefferson County (Leeds) Area after Redesignation to Attainment Status effective on September 28, 1993.

(ii) Additional information. None.

PART 81—[AMENDED]

1. The authority citation for part 81 continues to read as follows:

Authority: 42.U.S.C. 7401–7671q.

2. Section 81.301 is amended by revising the table for Lead to read as follows:

§ 81.301 Alabama.

* * * * *

ALABAMA-LEAD

Designated area	Designation		Classification	
	Date	Type	Date	Type
Statewide	March 7, 1995	Attainment.		

* * * * *

[FR Doc. 95–284 Filed 1–5–95; 8:45 am]

BILLING CODE 6560–50–P

GENERAL SERVICES ADMINISTRATION

41 CFR Parts 201–3, 201–9, 201–18, 201–20, 201–21, 201–23, and 201–39

RIN: 3090–AE75

Amendment of Miscellaneous FIRMR Provisions; Correction

AGENCY: Information Technology Service, GSA.

ACTION: Final rule; correction.

SUMMARY: This document implements technical corrections to a final rule regarding updating General Services Administration (GSA) offices and symbols and clarifying various Federal Information Resources Management (FIRMR) provisions which were published on Wednesday, November 30, 1994, (59 FR 61281) and began on page 61281 in the **Federal Register**.

EFFECTIVE DATE: December 30, 1994.

FOR FURTHER INFORMATION CONTACT: R. Stewart Randall, Jr., GSA, Office of Information Resources Management Policy, telephone (202) 501–4469 (v) or (202) 501–0657 (tdd)

In 41 CFR Chapter 201 Amendment of Miscellaneous FIRMR provisions beginning on page 61281 in the issue of Wednesday, November 30, 1994, make the following corrections:

§ 201–3.402 [Corrected]

1. On page 61282, in the second column, in § 201–3.402, paragraph (b) is corrected by removing the correspondence symbol (KMR) and replacing it with the correspondence symbol ''(KAR)''.

§ 201–9.202–1 [Corrected]

2. On page 61282, in the second column, in § 201–9.202–1, paragraph (b)(7) is corrected by removing the correspondence symbol ''(KMR)'' and replacing it with the correspondence symbol ''(KAR)''.

§ 201–9.202–2 [Corrected]

3. On page 61282, in the second column, in § 201–9.202–2, paragraph (b)(1)(ix) is corrected by removing the correspondence symbol ''(KMA)'' and replacing it with the correspondence symbol ''(KAA)''.

§ 201–18.003 [Corrected]

4. On page 61282, in the second column, in § 201–18.003, line five is corrected by removing the correspondence symbol ''(KMA)'' and replacing it with the correspondence symbol ''(KAA)''.

§ 201–20.303 [Corrected]

5. On page 61282, in the third column, in § 201–20.303, paragraph (d)(2), line five is corrected by removing the correspondence symbol ''(KMR)'' and replacing it with the correspondence symbol ''(KAR)''.

§ 201–20.305 [Corrected]

6. On page 61282, in the third column, in § 201–20.305, paragraph (a)(7) is corrected by removing the correspondence symbol ''(KMA)'' and replacing it with the correspondence symbol ''(KAA)''.

§ 201–21.403 [Corrected]

7. On page 61283, in the first column, in § 201–20.403, paragraph (a)(2)(iii), is corrected by removing the correspondence symbol ''(KMA)'' and replacing it with the correspondence symbol ''(KAA)''.

§ 201–21.603 [Corrected]

8. On page 61283, in the first column, in § 201–20.603, paragraphs (d)(1) and (d)(3) are corrected by removing the correspondence symbol ''(KMR)'' and replacing it with the correspondence symbol ''(KAR)''.

§ 201–21.604 [Corrected]

9. On page 61283, in the first column, in § 201–20.604(a) is corrected by removing the correspondence symbol ''(KMA)'' and replacing it with the correspondence symbol ''(KAA)''.

§ 201–23.003 [Corrected]

10. On page 61283, in the first column, in § 201–23.003, paragraph (a) and (c) are corrected by removing the correspondence symbol ''(KMA)'' and replacing it with the correspondence symbol ''(KAA)''.

§ 201–39.001 [Corrected]

11. On page 61283, in the first column, in § 201–39.001(b) is corrected by removing the correspondence symbol ''(KMR)'' and replacing it with the correspondence symbol ''KML'' and replacing it with ''KAL''.

§ 201–39.101–6 [Corrected]

2. On page 61283, in the third column, in § 201–101–6, paragraph (b) is corrected by removing the correspondence symbol ''(KMR)''and replacing it with the correspondence symbol ''(KAR)''.

§ 201–39.104–1. [Corrected]

13. On page 61283, in the third column, the section numbering ''201–37.104–1'' should be corrected to read ''§ 201–39.104–1'' and paragraph (b)(3) is corrected by removing the correspondence symbol ''(KMR)'' and replacing it with the correspondence symbol ''(KAR)''.

§ 201–39.3304–1 [Corrected]

14. On page 61284, in the first column, in § 201–39.3304–1 is corrected by removing the correspondence symbol ''(KMA)'' and replacing it with the correspondence symbol ''(KAA)''.

Dated: December 23, 1994.

Margaret Truntich,

Director, Regulations Analysis Division.

[FR Doc. 95–361 Filed 1–5–95; 8:45 am]

BILLING CODE 6820–25–M

DEPARTMENT OF THE INTERIOR

Bureau of Land Management

43 CFR Public Land Order 7108

[CA–050–7123–00–6251; CACA 7618]

Partial Revocation of Secretarial Order Dated April 20, 1922; California

AGENCY: Bureau of Land Management, Interior.

ACTION: Public Land Order.

SUMMARY: This order revokes a Secretarial Order dated April 20, 1922, insofar as it affects 43.92 acres of public lands withdrawn for the Bureau of Land Management's Powersite Classification No. 29. The land is no longer needed for this purpose, and the revocation is necessary to permit disposal of the land through land exchange under Section 206 of the Federal Land Policy and Management Act of 1976. This action will open the land to surface entry unless closed by overlapping withdrawals or temporary segregations of record. The land has been and remains open to mineral leasing and to mining under the provisions of the Mining Claims Rights Restoration Act of 1955.

EFFECTIVE DATE: February 6, 1995.

FOR FURTHER INFORMATION CONTACT: Duane Marti, BLM California State Office, 2800 Cottage Way, Sacramento, California 95825, 916–978–4820.

By virtue of the authority vested in the Secretary of the Interior by Section 204 of the Federal Land Policy and Management Act of 1976, 43 U.S.C. 1714 (1988), it is ordered as follows:

1. The Secretarial Order dated April 20, 1922, which withdrew public lands for Powersite Classification No. 29, is hereby revoked insofar as it affects the following described land:

Mount Diablo Meridian

T. 32 N., R. 8 W.,
Sec. 32, lot 3 (formerly described as SW¼SE¼).
The area described contains 43.92 acres in Trinity County.

2. At 10 a.m. on February 6, 1995, the land will be opened to the operation of the public land laws generally, subject to valid existing rights, the provisions of existing withdrawals, other segregations of record, and the requirements of applicable law. All valid applications received at or prior to 10 a.m. on February 6, 1995, shall be considered as simultaneously filed at that time. Those received thereafter shall be considered in the order of filing.

Dated: December 23, 1994.

Bob Armstrong,

Assistant Secretary of the Interior.

[FR Doc. 95–281 Filed 1–5–95; 8:45 am]

BILLING CODE 4310–40–P

DEPARTMENT OF TRANSPORTATION

Federal Highway Administration

49 CFR Part 382

[FHWA Docket Nos. MC–116, MC–92–19, MC–92–23]

RIN 2125–AA79, 2125–AC85, 2125–ADO6

Controlled Substance and Alcohol Use and Testing

AGENCY: Federal Highway Administration (FHWA), DOT.

ACTION: Final rule.

SUMMARY: On February 15, 1994, the Federal Highway Administration published final alcohol testing rules. Larger employers were scheduled to begin testing under these rules on January 1, 1995. In response to a number of petitions from the motor carrier industry, FHWA is briefly postponing this implementation date with respect to pre-employment testing only until May 1, 1995, to assist the motor carrier industry to comply effectively with the rule's provisions.

DATES: This amendment is effective December 31, 1994.

FOR FURTHER INFORMATION CONTACT: David Miller, Office of Motor Carrier Standards (202–366–1790), or David Sett, Office of the Chief Counsel (202–366–0834), Federal Highway Administration, Department of Transportation, 400 7th Street, SW., Washington, DC 20590. Office hours are from 7:45 a.m. to 4:15 p.m., Monday through Friday, except Federal legal holidays.

SUPPLEMENTARY INFORMATION: On February 15, 1994, FHWA, along with other Department of Transportation (DOT) operating administrations, published final alcohol testing regulations. These rules implemented the Omnibus Transportation Employee Testing Act of 1991. The FHWA rules (49 CFR part 382) require motor carriers to conduct pre-employment, post-accident, reasonable suspicion, and random alcohol testing of covered drivers, and also provide for return-to-

duty and follow-up testing for drivers who have tested at a level of .04 or above and whom their employers wish to return to the performance of safety-sensitive functions.

The FHWA rules also require that employers conduct these tests using the procedures of 49 CFR part 40. Part 40 requires that the use of evidential breath testing devices (EBTs) for alcohol testing. When it published part 40 in February 1994, the Department noted that the National Highway Traffic Safety Administration (NHTSA) would issue model specifications for non-evidential alcohol screening devices. Any such devices that NHTSA approved under these specifications could be used in place of EBTs for the screening tests required by part 40 (but not for the confirmation tests, which would still have to be conducted on EBTs). As the Department noted in its February publication, the Department would have to amend part 40 to establish procedures for the use of non-evidential alcohol screening devices before NHTSA-approved devices could actually be used by employers for DOT-mandated alcohol testing.

On December 2, 1994, NHTSA published a list of five non-evidential alcohol screening devices that met its model specifications. However, the Department has not yet published an amendment to part 40 providing procedures for the use of these devices, with the result that employers who are scheduled to begin testing on January 1, 1995, will not immediately be able to begin using non-evidential devices.

FHWA has received 12 petitions from motor carrier industry groups requesting postponement of the January 1, 1995, implementation date for alcohol testing. Among other reasons, the petitions suggested that it would be beneficial for the motor carrier industry to be able to postpone the beginning of alcohol testing until non-evidential screening devices could actually be used. Copies of these documents have been placed in the docket for this rulemaking.

FHWA is mindful that the motor carrier industry is, by a substantial margin, the largest industry covered by DOT alcohol testing rules. Approximately 7.1 million drivers, and over 500,000 motor carriers, are affected by these rules. The number of employers and the number of employees affected by the FHWA alcohol testing rule is far higher than the combined numbers of employers and employees in other covered transportation industries. The industry is also widely dispersed geographically, and the mobile and fluid nature of motor carrier operations creates complex implementation problems for employers.

The turnover rate for drivers in the industry is very high, approaching 100 percent per year in some segments. This places a particularly heavy responsibility on employers with respect to meeting the statutory requirement for pre-employment testing. All these factors suggest that it is particularly important to provide employers in this industry with additional flexibility before requiring random and pre-employment testing to begin.

We recognize the important safety benefits that will be derived from these rules but believe that it is reasonable to briefly delay them for the motor carrier industry because the rule will be more effectively implemented. This action is reasonable because, in addition to the complex problems caused by the size of the industry, there are other provisions in the FHWA rule that provide for additional safety checks of new employees. The provisions of 49 CFR 382.413, which require employers to obtain information about previous alcohol and controlled substance tests, can help employers, early in an employment relationship, to discover information about potential problems that new employees may have. Finally, there are already several existing rules that prohibit any alcohol use by drivers of commercial motor vehicles. These rules are enforced by Federal, state, and local officials who conducted over 1.9 million roadside safety inspections in 1993.

For these reasons, FHWA believes that postponing the implementation date for this kind of testing until non-evidential screening devices are fully authorized for use in the program is sensible. FHWA expects the postponement to be a short one. The Department will issue a notice of proposed rulemaking (NPRM) on non-evidential screening device procedures in the very near future, which, we anticipate, will have a 30-day comment period. The Department will review comments quickly and prepare a final rule, the effective date of which should be no later than May 1, 1995. In any case, pre-employment testing must begin by May 1, 1995, regardless of the effective date of this procedural rule. Should the procedural rule be published before April 1, 1995, the Department intends to amend part 382 to establish an implementation date for pre-employment testing that is 30 days from the publication date of the procedural rule.

Large employers must begin all kinds of alcohol tests except pre-employment, and are authorized to begin pre-employment tests, under part 382 on January 1, 1995. Employers who begin pre-employment testing on or after January 1 can do so with the confidence that the authority of Federal law stands behind them.

Reasonsable suspicion and post-accident tests are particularly crucial kinds of tests for a safety-oriented program like this one. However, the overall number of such tests is expected to be small. Consequently, all larger carriers will remain responsible for conducting these types of tests beginning January 1, 1995, using existing Part 40 procedures. In addition, it is very important for safety that a driver who has tested ''positive'' for alcohol not return to performance of safety-sensitive functions until he or she has passed a return-to-duty alcohol test and been made subject to follow-up tests. After January 1, 1995, employers who wish to return a driver to duty after a ''positive'' test must ensure that these tests are conducted, using existing Part 40 procedures.

While random testing implementation will continue to begin on January 1, 1995, this does not necessarily mean that employers must actually conduct random tests on that date. Random tests must be reasonably spread throughout the year. Employers must conduct a sufficient number of tests during the year to meet the 25 percent random testing rate requirement. Employers who wished to use non-evidential screening devices for most of their random tests have the flexibility to schedule their random tests so that most were conducted after the first few months of the year, when it is likely that procedures for their use will be in place. We would caution employers that this could not be an explicit, stated company policy, however. The intent of random testing under the rule is that employees never know when they might be tested. Employers cannot tell employees that no testing will be conducted during a certain time period. Random tests are also a more significant part of a deterrence and detection-based program than pre-employment tests, in any case. Consequently, it is not necessary or prudent to postpone random testing.

It should be emphasized that none of these points apply to smaller employers, who will begin conducting all types of tests, as scheduled, on January 1, 1996. Nor does anything in this rule change the January 1, 1995, implementation date for controlled substances testing under 49 CFR part 382.

Rulemaking Analyses and Notices

This rule is not subject to review under Executive Order 12866. It is significant within the meaning of the Department's Regulatory Policies and Procedures, since it affects an important Departmental safety initiative and is of substantial public interest. It is anticipated that this postponement will create some savings for the motor carrier industry, resulting, from the absence of the pre-employment testing requirements of the rule during the first four months of 1995. A portion of the anticipated annual benefits of the rule will also be forgone, however.

FHWA has determined that this rule does not have a significant economic impact on a substantial number of small entities, for purposes of the Regulatory Flexibility Act. In addition to the reason cited above, FHWA makes this determination because small entities, for purposes of Part 382, are those motor carriers with fewer than 50 covered drivers who are not scheduled to begin alcohol testing until January 1, 1996, in any case. There is not a sufficient Federalism impact to warrant preparation of a Federalism assessment under Executive Order 12612.

FHWA is making this rule final without first issuing a notice of proposed rulemaking. The rule is also being made effective before 30 days from the date of its publication. FHWA is taking these steps on the basis that notice and comment are impracticable, unnecessary, and contrary to the public interest, and that there is good cause for making the rule effective immediately. The rationale for this finding is as follows: all requirements of 49 CFR part 382 would have to be implemented by larger motor carriers on January 1, 1995, absent this action. Carriers would be in noncompliance with part 382 in any interval between that date and the date that this amendment takes effect. This amendment could not have its intended impact unless it is put into effect before January 1. Moreover, this amendment is one that relieves a restriction.

List of Subjects in 49 CFR Part 382

Alcohol testing, Controlled substances testing, Highways and roads, Highway safety, Motor carriers, Motor vehicle safety.

Issued this 30th day of December, 1994, at Washington, DC.

Rodney E. Slater,

Federal Highway Administrator.

For the reasons stated in the preamble, 49 CFR part 382 is amended as follows:

1. The authority citation is revised to read as follows:

Authority: 49 U.S.C. 31136, 31302 et seq., and 31502; 49 CFR 1.48.

2. 49 CFR § 382.115(a) is revised to read as follows:

§ 382.115 Starting date for testing programs.

(a) *Large employers.* (1) Except as otherwise provided in this paragraph, each employer with fifty or more drivers on March 17, 1994, shall implement the requirements of this part beginning on January 1, 1995.

(2) Large employers may begin implementing the requirements of § 382.301 of this part with respect to alcohol testing on January 1, 1995, but are not required to do so until May 1, 1995.

* * * * *

[FR Doc. 95–342 Filed 1–5–95; 8:45 am]

BILLING CODE 4910–22–M

DEPARTMENT OF COMMERCE

National Oceanic and Atmospheric Administration

50 CFR Part 630

[Docket No. 931078–4286; I.D. 122294E]

Atlantic Swordfish Fishery; Pilot Study Landing Requirements

AGENCY: National Marine Fisheries Service (NMFS), National Oceanic and Atmospheric Administration (NOAA), Commerce.

ACTION: Announcement of a change in off-loading requirements.

SUMMARY: NMFS announces that volunteer participants selected by NMFS to participate in the swordfish pilot program are not required to observe the off-loading time requirement when carrying an observer. The observer will be collecting statistical data that would otherwise be collected by dockside samplers within the off-loading time requirement. Therefore, NMFS has determined that the off-loading requirements of the regulations are unnecessary during 1995.

EFFECTIVE DATE: January 1, 1995 through December 31, 1995.

FOR FURTHER INFORMATION CONTACT: Rod Dalton, 813-893-3721, or Ron Rinaldo, 301-713-2347.

SUPPLEMENTARY INFORMATION: The Atlantic swordfish fishery is managed under the Fishery Management Plan (FMP) for Atlantic Swordfish and its implementing regulations at 50 CFR part 630 under the authority of the Magnuson Fishery Conservation and Management Act (16 U.S.C. 1801 *et seq.*) and the Atlantic Tunas Convention Act (ATCA) (16 U.S.C. 971 *et seq.*). Regulations issued under authority of the ATCA carry out the recommendations of the International Commission for the Conservation of Atlantic Tunas.

Section 630.51(b)(6) of the regulations requires that off- loading of vessels participating in the donation program begin between the hours of 8 a.m. and 6 p.m. local time. The Assistant Administrator for Fisheries, NOAA, (AA) is authorized under § 630.51(b)(7) to adjust these requirements. NMFS is providing observers for all pilot program trips in 1995. Therefore, the AA, in consultation with the industry and the NMFS Office of Enforcement, waives § 630.51 (b)(6), the off-loading time requirements for vessels carrying NMFS observers for 1995.

Classification

This rule is exempt from review under E.O. 12866.

Dated: December 30, 1994.

David S. Crestin,

Acting Director, Office of Fisheries Conservation and Management, National Marine Fisheries Service.

[FR Doc. 95–351 Filed 1–5–95; 8:45 am]

BILLING CODE 3510–22–F

Proposed Rules

Federal Register
Vol. 60, No. 4
Friday, January 6, 1995

This section of the FEDERAL REGISTER contains notices to the public of the proposed issuance of rules and regulations. The purpose of these notices is to give interested persons an opportunity to participate in the rule making prior to the adoption of the final rules.

DEPARTMENT OF TRANSPORTATION

Federal Aviation Administration

14 CFR Part 39

[Docket No. 94–NM–224–AD]

Airworthiness Directives; Boeing Model 747 Series Airplanes Equipped With General Electric Model CF6–80C2 Series Engines or Pratt & Whitney Model PW4000 Series Engines

AGENCY: Federal Aviation Administration, DOT.

ACTION: Notice of proposed rulemaking (NPRM).

SUMMARY: This document proposes the adoption of a new airworthiness directive (AD) that is applicable to certain Boeing Model 747 series airplanes. This proposal would require modification of the nacelle strut and wing structure, inspections and checks to detect discrepancies, and correction of discrepancies. This proposal is prompted by the development of a modification of the strut and wing structure that improves the fail-safe capability and durability of the strut-to-wing attachments, and reduces reliance on inspections of those attachments. The actions specified by the proposed AD are intended to prevent failure of the strut and subsequent loss of the engine.

DATES: Comments must be received by March 3, 1995.

ADDRESSES: Submit comments in triplicate to the Federal Aviation Administration (FAA), Transport Airplane Directorate, ANM–103, Attention: Rules Docket No. 94–NM–224–AD, 1601 Lind Avenue, SW., Renton, Washington 98055–4056. Comments may be inspected at this location between 9:00 a.m. and 3:00 p.m., Monday through Friday, except Federal holidays.

The service information referenced in the proposed rule may be obtained from Boeing Commercial Airplane Group, P.O. Box 3707, Seattle, Washington 98124–2207. This information may be examined at the FAA, Transport Airplane Directorate, 1601 Lind Avenue, SW., Renton, Washington.

FOR FURTHER INFORMATION CONTACT: Tim Backman, Aerospace Engineer, Airframe Branch, ANM–121S, FAA, Transport Airplane Directorate, Seattle Aircraft Certification Office, 1601 Lind Avenue, SW., Renton, Washington 98055–4056; telephone (206) 227–2776; fax (206) 227–1181.

SUPPLEMENTARY INFORMATION:

Comments Invited

Interested persons are invited to participate in the making of the proposed rule by submitting such written data, views, or arguments as they may desire. Communications shall identify the Rules Docket number and be submitted in triplicate to the address specified above. All communications received on or before the closing date for comments, specified above, will be considered before taking action on the proposed rule. The proposals contained in this notice may be changed in light of the comments received.

Comments are specifically invited on the overall regulatory, economic, environmental, and energy aspects of the proposed rule. All comments submitted will be available, both before and after the closing date for comments, in the Rules Docket for examination by interested persons. A report summarizing each FAA-public contact concerned with the substance of this proposal will be filed in the Rules Docket.

Commenters wishing the FAA to acknowledge receipt of their comments submitted in response to this notice must submit a self-addressed, stamped postcard on which the following statement is made: ‘‘Comments to Docket Number 94–NM–224–AD.’’ The postcard will be date stamped and returned to the commenter.

Availability of NPRMs

Any person may obtain a copy of this NPRM by submitting a request to the FAA, Transport Airplane Directorate, ANM–103, Attention: Rules Docket No. 94–NM–224–AD, 1601 Lind Avenue, SW., Renton, Washington 98055–4056.

Discussion

The FAA has received numerous reports of fatigue cracking and/or corrosion in the strut-to-wing attachments on Boeing Model 747 series airplanes. In two cases, cracking resulted in the failure of a strut load path and the subsequent loss of the number 3 engine and strut. In both cases, catastrophic accidents occurred when the number 3 engine and strut separated from the wing of the airplane and struck the number 4 engine, causing it to separate from the airplane. Investigation into the cause of these accidents and other reported incidents has revealed that fatigue cracks and corrosion in the strut-to-wing attachments, if not detected and corrected in a timely manner, can result in failure of the strut and subsequent separation of the engine from the airplane. Investigation also has revealed that the structural fail-safe capability of the strut-to-wing attachment is inadequate on these airplanes.

The FAA has previously issued 3 airworthiness directives (AD's) that address various problems associated with the strut attachment assembly on Model 747 series airplanes equipped with General Electric Model CF6–80C2 series engines or Pratt & Whitney Model PW4000 series engines. These AD's have required, among other things, inspection of the strut, midspar fittings, diagonal brace, and midspar fuse pins.

Explanation of Service Information

Boeing recently has developed a modification of the strut-to-wing attachment structure installed on certain Model 747 series airplanes equipped with General Electric Model CF6–80C2 series engines or Pratt & Whitney Model PW4000 series engines that significantly improves the load-carrying capability and durability of the strut-to-wing attachments. Such improvement also will substantially reduce the possibility of fatigue cracking and corrosion developing in the attachment assembly.

The FAA has reviewed and approved Boeing Alert Service Bulletin 747–54A2156, dated December 15, 1994, which describes procedures for modification of the nacelle strut and wing structure. This modification entails the following:

1. Providing a new fail-safe load path by installing a new dual side load fitting to the strut and the underwing structure and the associated wing back-up fitting, front spar post, and side links;

2. Installing a new titanium dual side load fitting to the strut aft bulkhead and

new 15–5 stainless steel midspar fittings;

3. Replacing the aft bulkhead assembly and overhaul of the spring beam;

4. Improving the strut-to-wing attachments by replacing the upper link and the diagonal brace;

5. Reworking the rib of wing station (WS)1140; and

6. Modifying the electrical wiring and hydraulics by rerouting certain wire bundles around the new dual side load fitting and installing new hydraulic tubes.

This alert service bulletin specifies that the modification of the nacelle strut and wing structure is to be accomplished prior to, or concurrently with, the terminating actions described in the service bulletins listed in paragraph I.C., Table 2, ''Prior or Concurrent Service Bulletins,'' on page 7 of this alert service bulletin. These terminating actions include the following:

1. Replacement of the diagonal brace, midspar, and upper link fuse pins with new third generation 15–5 corrosion resistant steel fuse pins;

2. Inspection and replacement of the bearings on the lower spar fitting of the outboard engine strut with new bearings;

3. Installation of improved bushings in the strut-to-wing attach fittings; and

4. Inspection and rework of improperly torqued fasteners.

Paragraph III, NOTES 8, 9, 10, and 11 of the Accomplishment Instructions on page 91 of the alert service bulletin also describe procedures for inspections and checks to detect discrepancies of the adjacent structure, and correction of any discrepancies.

Explanation of the Provisions of the Proposed AD

Since an unsafe condition has been identified that is likely to exist or develop on other products of this same type design, the proposed AD would require modification of the nacelle strut and wing structure, inspections and checks to detect discrepancies in the adjacent structure, and correction of discrepancies. The actions would be required to be accomplished in accordance with the alert service bulletin described previously.

The FAA has determined that long term continued operational safety will be better assured by design changes to remove the source of the problem, rather than by repetitive inspections. Long term inspections may not be providing the degree of safety assurance necessary for the transport airplane fleet. This, coupled with a better understanding of the human factors associated with numerous continual inspections, has led the FAA to consider placing less emphasis on inspections and more emphasis on design improvements. The proposed modification requirement is in consonance with these considerations.

Accomplishment of the modification of the nacelle strut and wing structure would terminate the inspections currently required by the following AD's:

AD No.	Amendment No.	Federal Register citation	Date of publication
93–17–07	39–8678	58 FR 45827	Aug. 31, 1993.
93–03–14	39–8518	58 FR 14513	Mar. 18, 1993.
92–24–51	39–8439	57 FR 60118	Dec. 18, 1992.

As a result of recent communications with the Air Transport Association (ATA) of America, the FAA has learned that, in general, some operators may misunderstand the legal effect of AD's on airplanes that are identified in the applicability provision of the AD, but that have been altered or repaired in the area addressed by the AD. The FAA points out that all airplanes identified in the applicability provision of an AD are legally subject to the AD. If an airplane has been altered or repaired in the affected area in such a way as to affect compliance with the AD, the owner or operator is required to obtain FAA approval for an alternative method of compliance with the AD, in accordance with the paragraph of each AD that provides for such approvals. A note has been included in this notice to clarify this requirement.

Cost Estimate

There are approximately 257 Model 747 series airplanes equipped with General Electric Model CF6–80C2 series engines or Pratt & Whitney Model PW4000 series engines of the affected design in the worldwide fleet. The FAA estimates that 36 airplanes of U.S. registry would be affected by this proposed AD.

The proposed modification would take approximately 6,253 work hours per airplane to accomplish, at an average labor cost of $60 per work hour. The manufacturer would incur the cost of labor, on a prorated basis, with 20 years being the expected life of these airplanes. The total cost impact of the proposed AD on U.S. operators is based on the median age for the fleet of Model 747 series airplanes equipped with General Electric Model CF6–80C2 series engines or Pratt & Whitney Model PW4000 series engines, which is estimated to be 5 years. Required parts would be supplied by the manufacturer at no cost to the operators. Based on these figures, the total cost impact of the proposed AD on U.S. operators is estimated to be $3,376,620, or $93,795 per airplane.

This cost impact figure does not reflect the cost of the terminating actions described in the service bulletins listed in paragraph I.C., Table 2, ''Prior or Concurrent Service Bulletins,'' on page 7 of Boeing Alert Service Bulletin 747–54A2156, dated December 15, 1994, that are proposed to be accomplished prior to, or concurrently with, the modification of the nacelle strut and wing structure. Since some operators may have accomplished certain modifications on some or all of the airplanes in its fleet, while other operators may not have accomplished any of the modifications on any of the airplanes in its fleet, the FAA is unable to provide a reasonable estimate of the cost of accomplishing the terminating actions described in the service bulletins listed in Table 2 of the Boeing alert service bulletin. As indicated earlier in this preamble, the FAA invites comments specifically on the overall economic aspects of this proposed rule. Any data received via public comments to this notice will aid the FAA in developing an accurate accounting of the cost impact of the rule.

The cost impact figure discussed above is based on assumptions that no operator has yet accomplished any of the proposed requirements of this AD action, and that no operator would accomplish those actions in the future if this AD were not adopted.

The FAA recognizes that the obligation to maintain aircraft in an airworthy condition is vital, but sometimes excessive. Because AD's

require specific actions to address specific unsafe conditions, they appear to impose costs that would not otherwise be borne by operators. However, because of the general obligation of operators to maintain aircraft in an airworthy condition, this appearance is deceptive. Attributing those costs solely to the issuance of this AD is unrealistic because, in the interest of maintaining safe aircraft, prudent operators would accomplish the required actions even if they were not required to do so by the AD.

A full cost-benefit analysis has not been accomplished for this proposed AD. As a matter of law, in order to be airworthy, an aircraft must conform to its type design and be in a condition for safe operation. The type design is approved only after the FAA makes a determination that it complies with all applicable airworthiness requirements. In adopting and maintaining those requirements, the FAA has already made the determination that they establish a level of safety that is cost-beneficial. When the FAA, as in this proposed AD, makes a finding of an unsafe condition, this means that the original cost-beneficial level of safety is no longer being achieved and that the proposed actions are necessary to restore that level of safety. Because this level of safety has already been determined to be cost-beneficial, a full cost-benefit analysis for this proposed AD would be redundant and unnecessary.

Regulatory Impact

The regulations proposed herein would not have substantial direct effects on the States, on the relationship between the national government and the States, or on the distribution of power and responsibilities among the various levels of government. Therefore, in accordance with Executive Order 12612, it is determined that this proposal would not have sufficient federalism implications to warrant the preparation of a Federalism Assessment.

For the reasons discussed above, I certify that this proposed regulation (1) is not a ''significant regulatory action'' under Executive Order 12866; (2) is not a ''significant rule'' under the DOT Regulatory Policies and Procedures (44 FR 11034, February 26, 1979); and (3) if promulgated, will not have a significant economic impact, positive or negative, on a substantial number of small entities under the criteria of the Regulatory Flexibility Act. A copy of the draft regulatory evaluation prepared for this action is contained in the Rules Docket. A copy of it may be obtained by contacting the Rules Docket at the location provided under the caption **ADDRESSES.**

List of Subjects in 14 CFR Part 39

Air transportation, Aircraft, Aviation safety, Safety.

The Proposed Amendment

Accordingly, pursuant to the authority delegated to me by the Administrator, the Federal Aviation Administration proposes to amend part 39 of the Federal Aviation Regulations (14 CFR part 39) as follows:

PART 39—AIRWORTHINESS DIRECTIVES

1. The authority citation for part 39 continues to read as follows:

Authority: 49 U.S.C. App. 1354(a), 1421 and 1423; 49 U.S.C. 106(g); and 14 CFR 11.89.

§ 39.13 [Amended]

2. Section 39.13 is amended by adding the following new airworthiness directive:

Boeing: Docket 94–NM–224–AD.

Applicability: Model 747 series airplanes having line positions 679 through 1046 inclusive, equipped with General Electric Model CF6–80C2 series engines or Pratt & Whitney Model PW4000 series engines; certificated in any category.

Note 1: This AD applies to each airplane identified in the preceding applicability provision, regardless of whether it has been modified, altered, or repaired in the area subject to the requirements of this AD. For airplanes that have been modified, altered, or repaired so that the performance of the requirements of this AD is affected, the owner/operator must use the authority provided in paragraph (d) to request approval from the FAA. This approval may address either no action, if the current configuration eliminates the unsafe condition; or different actions necessary to address the unsafe condition described in this AD. Such a request should include an assessment of the effect of the changed configuration on the unsafe condition addressed by this AD. In no case does the presence of any modification, alteration, or repair remove any airplane from the applicability of this AD.

Compliance: Required as indicated, unless accomplished previously.

To prevent failure of the strut and subsequent loss of the engine, accomplish the following:

(a) Within 80 months after the effective date of this AD, accomplish the modification of the nacelle strut and wing structure in accordance with Boeing Alert Service Bulletin 747–54A2156, dated December 15, 1994. All of the terminating actions described in the service bulletins listed in paragraph I.C., Table 2, ''Prior or Concurrent Service Bulletins,'' on page 7 of Boeing Alert Service Bulletin 747–54A2156, dated December 15, 1994, must be accomplished in accordance with those service bulletins prior to, or concurrently with, the accomplishment of the modification of the nacelle strut and wing structure required by this paragraph.

(b) Perform the inspections and checks specified in paragraph III, NOTES 8, 9, 10, and 11 of the Accomplishment Instructions on page 91 of Boeing Alert Service Bulletin 747–54A2156, dated December 15, 1994, concurrently with the modification of the nacelle strut and wing structure required by paragraph (a) of this AD. Prior to further flight, correct any discrepancies in accordance with the alert service bulletin.

(c) Accomplishment of the modification of the nacelle strut and wing structure in accordance with Boeing Alert Service Bulletin 747–54A2156, dated December 15, 1994, constitutes terminating action for the inspections required by the following AD's:

AD No.	Amendment No.	Federal Register citation	Date of publication
93–17–07	39–8678	58 FR 45827	Aug. 31, 1993.
93–03–14	39–8518	58 FR 14513	Mar. 18, 1993.
92–24–51	39–8439	57 FR 60118	Dec. 18, 1992.

(d) An alternative method of compliance or adjustment of the compliance time that provides an acceptable level of safety may be used if approved by the Manager, Seattle Aircraft Certification Office (ACO), FAA, Transport Airplane Directorate. Operators shall submit their requests through an appropriate FAA Principal Maintenance Inspector, who may add comments and then send it to the Manager, Seattle ACO.

Note 2: Information concerning the existence of approved alternative methods of compliance with this AD, if any, may be obtained from the Seattle ACO.

(e) Special flight permits may be issued in accordance with sections 21.197 and 21.199 of the Federal Aviation Regulations (14 CFR 21.197 and 21.199) to operate the airplane to a location where the requirements of this AD can be accomplished.

Issued in Renton, Washington, on December 30, 1994.

S.R. Miller,

Acting Manager, Transport Airplane Directorate, Aircraft Certification Service.

[FR Doc. 95–307 Filed 1–5–95; 8:45 am]

BILLING CODE 4910–13–U

---

14 CFR Part 39

[Docket No. 94–NM–28–AD]

Airworthiness Directives; Boeing Model 767 Series Airplanes Equipped With General Electric CF6–80C2 Series Engines

AGENCY: Federal Aviation Administration, DOT.

ACTION: Notice of proposed rulemaking (NPRM).

SUMMARY: This document proposes the supersedure of an existing airworthiness directive (AD), applicable to certain Boeing Model 767 series airplanes, that currently requires tests, inspections, and adjustments of the thrust reverser system. This action would add requirements for installation of a terminating modification on airplanes equipped with General Electric CF6–80C2 series engines, and repetitive operational checks of the electro-mechanical brake and the cone brake of the center drive unit following accomplishment of the modification. This action also would remove airplanes equipped with Rolls-Royce RB211–524 series engines from the applicability of the existing AD. This proposal is prompted by the identification of a modification that ensures that the level of safety inherent in the original type design of the thrust reverser system is further enhanced. The actions specified by the proposed AD are intended to prevent possible discrepancies that exist in the current thrust reverser control system, which could result in an inadvertent deployment of a thrust reverser during flight.

DATES: Comments must be received by March 3, 1995.

ADDRESSES: Submit comments in triplicate to the Federal Aviation Administration (FAA), Transport Airplane Directorate, ANM–103, Attention: Rules Docket No. 94–NM–28–AD, 1601 Lind Avenue, SW., Renton, Washington 98055–4056. Comments may be inspected at this location between 9:00 a.m. and 3:00 p.m., Monday through Friday, except Federal holidays.

The service information referenced in the proposed rule may be obtained from Boeing Commercial Airplane Group, P.O. Box 3707, Seattle, Washington 98124–2207. This information may be examined at the FAA, Transport Airplane Directorate, 1601 Lind Avenue, SW., Renton, Washington.

FOR FURTHER INFORMATION CONTACT: Lanny Pinkstaff, Aerospace Engineer, Propulsion Branch, ANM–140S, FAA, Transport Airplane Directorate, Seattle Aircraft Certification Office, 1601 Lind Avenue, SW., Renton, Washington 98055–4056; telephone (206) 227–2684; fax (206) 227–1181.

SUPPLEMENTARY INFORMATION:

Comments Invited

Interested persons are invited to participate in the making of the proposed rule by submitting such written data, views, or arguments as they may desire. Communications shall identify the Rules Docket number and be submitted in triplicate to the address specified above. All communications received on or before the closing date for comments, specified above, will be considered before taking action on the proposed rule. The proposals contained in this notice may be changed in light of the comments received.

Comments are specifically invited on the overall regulatory, economic, environmental, and energy aspects of the proposed rule. All comments submitted will be available, both before and after the closing date for comments, in the Rules Docket for examination by interested persons. A report summarizing each FAA-public contact concerned with the substance of this proposal will be filed in the Rules Docket.

Commenters wishing the FAA to acknowledge receipt of their comments submitted in response to this notice must submit a self-addressed, stamped postcard on which the following statement is made: ''Comments to Docket Number 94–NM–28–AD.'' The postcard will be date stamped and returned to the commenter.

Availability of NPRMs

Any person may obtain a copy of this NPRM by submitting a request to the FAA, Transport Airplane Directorate, ANM–103, Attention: Rules Docket No. 94–NM–28–AD, 1601 Lind Avenue, SW., Renton, Washington 98055–4056.

Discussion

On October 7, 1991, the FAA issued AD 91–22–02, amendment 39–8062 (56 FR 51638, October 15, 1991), applicable to Boeing Model 767 series airplanes equipped with Rolls-Royce RB211–524 series engines or General Electric CF6–80C2 series engines, to require tests, inspections, and adjustments of the thrust reverser system. That action was prompted by an ongoing design review, resulting from an accident investigation from which it had been determined that, prior to the accident, the airplane apparently experienced an uncommanded in-flight deployment of a thrust reverser. Deployment of a thrust reverser in flight could result in reduced controllability of the airplane. The requirements of that AD are intended to ensure the integrity of the fail-safe features of the thrust reverser system by preventing possible discrepancies in the thrust reverser control system that can result in the inadvertent deployment of a thrust reverser during flight.

Since the issuance of AD 91–22–02, the FAA issued AD 94–17–03, amendment 39–8998 (59 FR 41647, August 15, 1994). AD 94–17–03 was issued to require inspections, adjustments, and functional checks of the thrust reverser system; installation of a terminating modification; and repetitive operational checks of the gearbox locks and the air motor brake following accomplishment of the terminating modification on Model 767 series airplanes equipped with Rolls-Royce RB211–524 series engines. In the preamble to AD 94–17–03, the FAA stated it would consider superseding AD 91–22–02 to remove the requirements for Model 767 series airplanes equipped with Rolls-Royce RB211–524 series engines from that AD, to specify that those requirements are contained in AD 94–17–03, and to require accomplishment of a terminating modification for Model 767 series airplanes equipped with General Electric CF6–80C2 series engines. This action proposes such requirements.

Explanation of Relevant Service Information

Since the issuance of AD 91–22–02, the FAA has reviewed and approved Boeing Service Bulletin 767–78–0047, Revision 3, dated July 28, 1994. The original issue of the service bulletin was cited in AD 91–22–02 as the appropriate source of service information for performing various tests, inspections, and adjustments required by that AD. Revision 3 of the service bulletin revises certain procedures specified in the Accomplishment Instructions of earlier revisions of the service bulletin. (The FAA has referenced this latest revision of the service bulletin as the appropriate source of service information for accomplishment of those actions after the effective date of this proposed AD.)

The FAA also has reviewed and approved Boeing Service Bulletin 767–78–0063, Revision 2, dated April 28,

1994, which describes procedures for installation of a third locking system on the thrust reversers on Model 767 series airplanes equipped with General Electric CF6–80C2 series engines to minimize the possibility of an uncommanded in-flight deployment of the thrust reversers. This modification involves the following:

1. installing fuselage-to-wing pressure seal doublers;
2. routing and installing new ships wiring;
3. installing the tray assembly and thrust reverser relay module on the E1–4 or E2–6 shelf;
4. installing circuit breakers, filler patches, bus bars, and a relay in the P11 panel;
5. removing, reworking, and installing the M966 autothrottle microswitch pack;
6. Installing the left and right thrust reverser locks with associated wire bundles on both engines; and
7. Performing a functional test of the thrust reverser system.

The FAA has determined that accomplishing this modification in accordance with the service bulletin will positively address the identified unsafe condition with regard to those airplanes equipped with General Electric CF6–80C2 series engines.

Explanation of the Proposed Requirements

Since an unsafe condition has been identified that is likely to exist or develop on other products of this same type design, the proposed AD would supersede AD 91–22–02 to continue to require tests, inspections, and adjustments of the thrust reverser system on Model 767 series airplanes equipped with General Electric CF6–80C2 series engines. This proposed AD would add a requirement to install the terminating modification, described above. The tests, inspections, adjustments, and terminating modification would be required to be accomplished in accordance with the Boeing service bulletins described previously.

In addition, the FAA has determined that operational checks of the electro-mechanical brake and the cone brake of the center drive unit are necessary to provide an adequate level of safety and to ensure the effectiveness of the terminating modification following its installation in addressing the unsafe condition identified in this proposed AD. Procedures for accomplishment of the proposed operational checks are specified in Appendix 1 (including Figure 1) of this proposed AD.

Accomplishment of the terminating modification and operational checks would constitute terminating action for the tests, inspections, and adjustments currently required by AD 91–22–02.

This proposed AD also would remove airplanes equipped with Rolls-Royce RB211–524 series engines from the applicability of AD 91–22–02.

As a result of recent communications with the Air Transport Association (ATA) of America, the FAA has learned that, in general, some operators may misunderstand the legal effect of AD's on airplanes that are identified in the applicability provision of the AD, but that have been altered or repaired in the area addressed by the AD. The FAA points out that all airplanes identified in the applicability provision of an AD are legally subject to the AD. If an airplane has been altered or repaired in the affected area in such a way as to affect compliance with the AD, the owner or operator is required to obtain FAA approval for an alternative method of compliance with the AD, in accordance with the paragraph of each AD that provides for such approvals. A note has been included in this notice to clarify this requirement.

Cost Impact

There are approximately 135 Boeing Model 767 series airplanes equipped with General Electric CF6–80C2 series engines in the worldwide fleet. The FAA estimates that 39 airplanes of U.S. registry would be affected by this proposed AD.

The tests, inspections, and adjustments that were previously required by AD 91–22–02, and retained in this AD, take approximately 30 work hours per airplane to accomplish, at an average labor rate of $60 per work hour. Based on these figures, the total cost impact on U.S. operators of the currently required tests, inspections, and adjustments that would be retained in AD is estimated to be $70,200, or $1,800 per airplane, per inspection cycle.

The terminating modification proposed by this AD would take approximately 786 work hours per airplane to accomplish, at an average labor rate of $60 per work hour. Required parts would be provided by the manufacturer at no cost to the operator. The repetitive operational checks proposed by this AD would take approximately 2 work hours per airplane to accomplish at an average labor rate of $60 per work hour. Based on these figures, the total cost impact of the terminating modification and repetitive operational checks proposed in this AD on U.S. operators is estimated to be $1,843,920, or $47,280 per airplane.

The number of required work hours for each requirement of this proposed AD, as indicated above, is presented as if the accomplishment of the actions were to be conducted as ''stand alone'' actions. However, in actual practice, these actions for the most part would be accomplished coincidentally or in combination with normally scheduled airplane inspections and other maintenance program tasks. Therefore, the actual number of necessary additional work hours will be minimal in many instances. Additionally, any costs associated with special airplane scheduling will be minimal.

The FAA recognizes the large number of work hours required to accomplish the proposed modification. However, the 3-year compliance time proposed in paragraph (c) of this AD should allow the modification to be accomplished coincidentally with scheduled major airplane inspection and maintenance activities, thereby minimizing the costs associated with special airplane scheduling.

Regulatory Impact

The regulations proposed herein would not have substantial direct effects on the States, on the relationship between the national government and the States, or on the distribution of power and responsibilities among the various levels of government. Therefore, in accordance with Executive Order 12612, it is determined that this proposal would not have sufficient federalism implications to warrant the preparation of a Federalism Assessment.

For the reasons discussed above, I certify that this proposed regulation (1) is not a ''significant regulatory action'' under Executive Order 12866; (2) is not a ''significant rule'' under the DOT Regulatory Policies and Procedures (44 FR 11034, February 26, 1979); and (3) if promulgated, will not have a significant economic impact, positive or negative, on a substantial number of small entities under the criteria of the Regulatory Flexibility Act. A copy of the draft regulatory evaluation prepared for this action is contained in the Rules Docket. A copy of it may be obtained by contacting the Rules Docket at the location provided under the caption **ADDRESSES.**

List of Subjects in 14 CFR Part 39

Air transportation, Aircraft, Aviation safety, Safety.

The Proposed Amendment

Accordingly, pursuant to the authority delegated to me by the

Administrator, the Federal Aviation Administration proposes to amend part 39 of the Federal Aviation Regulations (14 CFR part 39) as follows:

PART 39—AIRWORTHINESS DIRECTIVES

1. The authority citation for part 39 continues to read as follows:

Authority: 49 U.S.C. App. 1354(a), 1421 and 1423; 49 U.S.C. 106(g); and 14 CFR 11.89.

§ 39.13 [Amended]

2. Section 39.13 is amended by removing amendment 39–8062 (56 FR 51638, October 15, 1991), and by adding a new airworthiness directive (AD), to read as follows:

Boeing: Docket 94–NM–28–AD. Supersedes AD 91–22–02, Amendment 39–8062.

Applicability: Model 767 series airplanes equipped with General Electric CF6–80C2 series engines, certificated in any category.

Note 1: This AD applies to each airplane identified in the preceding applicability provision, regardless of whether it has been modified, altered, or repaired in the area subject to the requirements of this AD. For airplanes that have been modified, altered, or repaired so that the performance of the requirements of this AD is affected, the owner/operator must use the authority provided in paragraph (f) to request approval from the FAA. This approval may address either no action, if the current configuration eliminates the unsafe condition; or different actions necessary to address the unsafe condition described in this AD. Such a request should include an assessment of the effect of the changed configuration on the unsafe condition addressed by this AD. In no case does the presence of any modification, alteration, or repair remove any airplane from the applicability of this AD.

Compliance: Required as indicated, unless accomplished previously.

To ensure the integrity of the fail-safe features of the thrust reverser system, accomplish the following:

(a) Within 30 days after October 15, 1991 (the effective date of AD 91–22–02, amendment 39–8062), perform tests, inspections, and adjustments of the thrust reverser system in accordance with Boeing Service Bulletin 767–78–0047, dated August 22, 1991; Revision 1, dated March 26, 1992; Revision 2, dated January 21, 1993; or Revision 3, dated July 28, 1994. After the effective date of this AD, those actions shall be accomplished only in accordance with Revision 3 of the service bulletin.

(1) Except as provided by paragraph (a)(2) of this AD, repeat all tests and inspections thereafter at intervals not to exceed 3,000 flight hours until the modification required by paragraph (c) of this AD is accomplished.

(2) Repeat the check of the grounding wire for the Directional Pilot Valve (DPV) of the thrust reverser in accordance with the service bulletin at intervals not to exceed 1,500 flight hours, and whenever maintenance action is taken that would disturb the DPV grounding circuit, until the modification required by paragraph (c) of this AD is accomplished.

(b) If any of the tests and/or inspections required by paragraph (a) of this AD cannot be successfully performed, or if those tests and/or inspections result in findings that are unacceptable in accordance with Boeing Service Bulletin 767–78–0047, dated August 22, 1991; Revision 1, dated March 26, 1992; Revision 2, dated January 21, 1993; or Revision 3, dated July 28, 1994; accomplish paragraphs (b)(1) and (b)(2) of this AD. After the effective date of this AD, the actions required by paragraphs (b)(1) and (b)(2) shall be accomplished only in accordance with Revision 3 of the service bulletin.

(1) Prior to further flight, deactivate the associated thrust reverser in accordance with Section 78–31–1 of Boeing Document D630T002, ''Boeing 767 Dispatch Deviation Guide,'' Revision 9, dated May 1, 1991; or Revision 10, dated September 1, 1992. After the effective date of this AD, this action shall be accomplished only in accordance with Revision 10 of the Boeing document. No more than one reverser on any airplane may be deactivated under the provisions of this paragraph.

(2) Within 10 days after deactivation of any thrust reverser in accordance with this paragraph, the thrust reverser must be repaired in accordance with Boeing Service Bulletin 767–78–0047, dated August 22, 1991; Revision 1, dated March 26, 1992; Revision 2, dated January 21, 1993; or Revision 3, dated July 28, 1994. After the effective date of this AD, the repair shall be accomplished only in accordance with Revision 3 of the service bulletin. Additionally, the tests and/or inspections required by paragraph (a) of this AD must be successfully accomplished; once this is accomplished, the thrust reverser must then be reactivated.

(c) Within 3 years after the effective date of this AD, install a third locking system on the left- and right-hand engine thrust reversers in accordance with Boeing Service Bulletin 767–78–0063, Revision 2, dated April 28, 1994.

Note 2: The Boeing service bulletin references General Electric Service Bulletin 78–135 as an additional source of service information for accomplishment of the third locking system on the thrust reversers. However, the Boeing service bulletin does not specify the appropriate revision level for the General Electric service bulletin. The appropriate revision level for the General Electric service bulletin to be used in conjunction with the Boeing service bulletin is Revision 3, dated August 2, 1994.

(d) Within 4,000 flight hours after accomplishing the modification required by paragraph (c) of this AD, or within 4,000 flight hours after the effective date of this AD, whichever occurs later; and thereafter at intervals not to exceed 4,000 flight hours; perform operational checks of the electro-mechanical brake and the cone brake of the center drive unit in accordance with Appendix 1 (including Figure 1) of this AD.

(e) Accomplishment of the modification and periodic operational checks required by paragraphs (c) and (d) of this AD constitutes terminating action for the tests, inspections, and adjustments required by paragraph (a) of this AD.

(f) An alternative method of compliance or adjustment of the compliance time that provides an acceptable level of safety may be used if approved by the Manager, Seattle Aircraft Certification Office (ACO), FAA, Transport Airplane Directorate. Operators shall submit their requests through an appropriate FAA Principal Maintenance Inspector, who may add comments and then send it to the Manager, Seattle ACO.

Note 3: Information concerning the existence of approved alternative methods of compliance with this AD, if any, may be obtained from the Seattle ACO.

(g) Special flight permits may be issued in accordance with sections 21.197 and 21.199 of the Federal Aviation Regulations (14 CFR 21.197 and 21.199) to operate the airplane to a location where the requirements of this AD can be accomplished.

Appendix—Thrust Reverser Electro-Mechanical Brake and CDU Cone Brake Test

1. General

A. This procedure contains steps to do two checks:
(1) A check of the holding torque of the electro-mechanical brake
(2) A check of the holding torque of the CDU cone brake.

2. Electro-Mechanical Brake and CDU Cone Brake Torque Check (Fig. 1)

A. Prepare to do the checks:
(1) Open the fan cowl panels.
B. Do a check of the torque of the electro-mechanical brake:
(1) Do a check of the running torque of the thrust reverser system:
(a) Manually extend the thrust reverser six inches and measure the running torque.
(1) Make sure the torque is less than 10 pounds-inches.
(2) Do a check of the elctro-mechanical brake holding torque:
(a) Make sure the thrust reverser translating cowl is extended at least one inch.
(b) Make sure the CDU lock handle is released.
(c) Pull down on the manual release handle on the electro-mechanical brake until the handle fully engages the retaining clip.

Note: This will lock the electro-mechanical brake.

(d) With the manual drive lockout cover removed from the CDU, install a 1/4-inch extension tool and dial-type torque wrench into the drive pad.

Note: You will need a 24-inch extension to provide adequate clearance for the torque wrench.

(e) Apply 90 pound-inches of torque to the system.
(1) The electro-mechanical brake system is working correctly if the torque is reached before you turn the wrench 450 degrees (1-¼ turns).
(2) If the flexshaft turns more than 450 degrees before you reach the specified torque, you must replace the long flexshaft between the CDU and the upper angle gearbox.

(3) If you do not get 90 pound-inches of torque, you must replace the electro-mechanical brake.

(f) Release the torque by turning the wrench in the opposite direction until you read zero pound-inches.

(1) If the wrench does not return to within 30 degrees of initial starting point, you must replace the long flexshaft between the CDU and upper angle gearbox.

(3) Fully retract the thrust reverser.

C. Do a check of the torque of the CDU cone brake:

(1) Pull up on the manual release handle to unlock the electro-mechanical brake.

(2) Pull the manual brake release lever on the CDU to release the cone brake.

Note: This will release the pre-load tension that may occur during a stow cycle.

(3) Return the manual brake release lever to the locked position to engage the cone brake.

(4) Remove the two bolts that hold the lockout plate to the CDU and remove the lockout plate.

(5) Install a ¼-inch drive and a dial-type torque wrench into the CDU drive pad.

CAUTION: DO NOT USE MORE THAN 130 POUND-INCHES OF TORQUE WHEN YOU DO THIS CHECK. EXCESSIVE TORQUE WILL DAMAGE THE CDU.

(6) Turn the torque wrench to try to manually extend the translating cowl until you get at least 15 pound-inches.

Note: The cone brake prevents movement in the extend direction only. If you try to measure the holding torque in the retract direction, you will get a false reading.

(a) If the torque is less than 15 pound-inches, you must replace the CDU.

D. Return the airplane to its usual condition:

(1) Fully retract the thrust reverser.

(2) Pull down on the manual release handle on the electro-mechanical brake until the handle fully engages the retaining clip.

Note: This will lock the electro-mechanical brake.

(3) Close the fan cowl panels.

BILLING CODE 4910–13–U

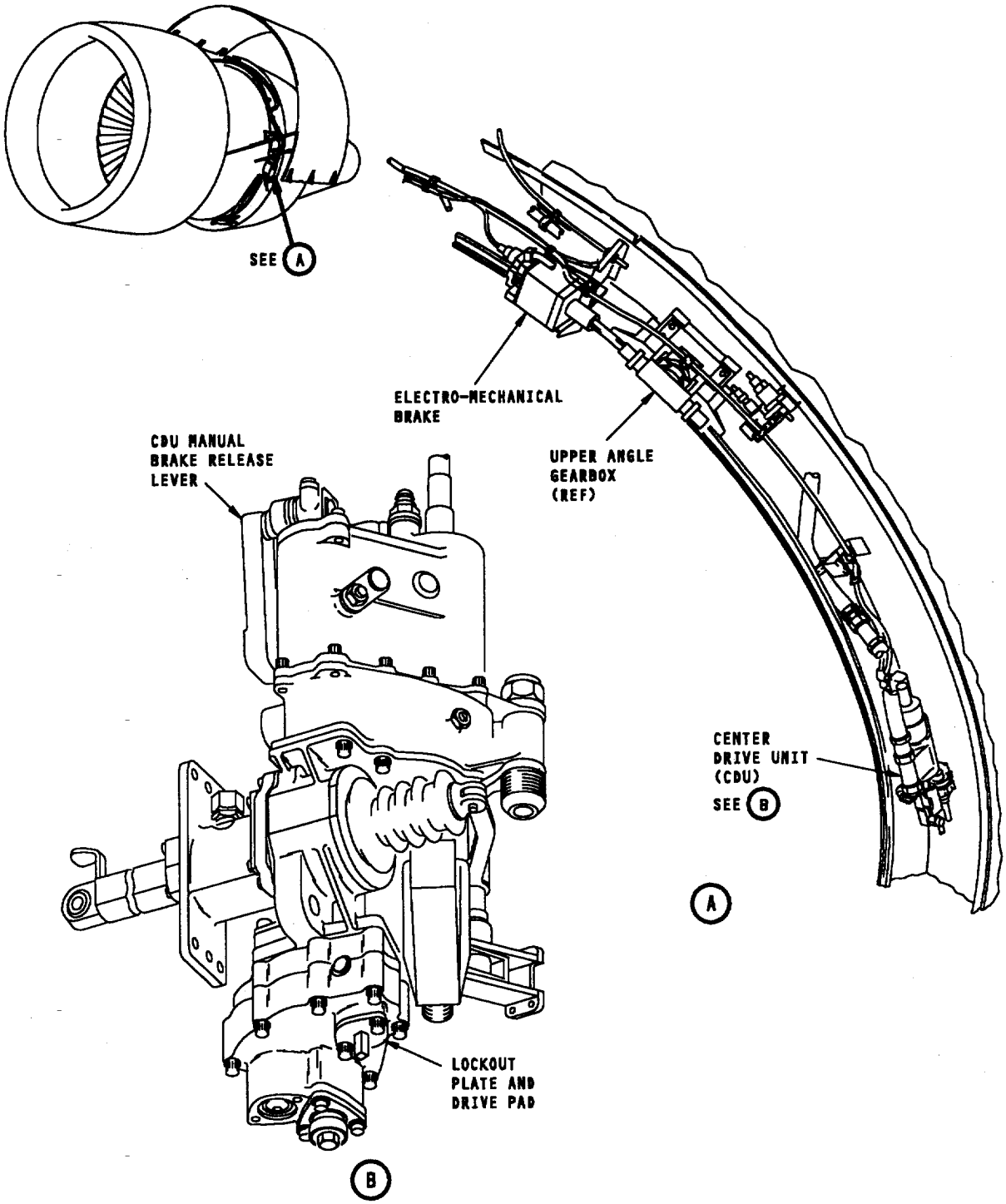

Electro-Mechanical Brake and CDU Cone Brake Torque Check
Figure 1

BILLING CODE 4910–13–C

Issued in Renton, Washington, on December 30, 1994.

Darrell M. Pederson,

Acting Manager, Transport Airplane Directorate, Aircraft Certification Service.

[FR Doc. 95–306 Filed 1–5–95; 8:45 am]

BILLING CODE 4910–13–U

---

14 CFR Part 39

[Docket No. 94–NM–175–AD]

Airworthiness Directives; McDonnell Douglas Model MD–11 Series Airplanes

AGENCY: Federal Aviation Administration, DOT.

ACTION: Notice of proposed rulemaking (NPRM).

SUMMARY: This document proposes the adoption of a new airworthiness directive (AD) that is applicable to certain McDonnell Douglas MD–11 series airplanes. This proposal would require the installation of an electrically controlled slat system. This proposal is prompted by numerous incidents of inadvertent deployment of the slats while the airplane was in flight at cruise altitude. The actions specified by the proposed AD are intended to prevent inadvertent deployment of the slats during flight, which could result in an abrupt pitch up of the airplane and consequent injury to crew and passengers; it could also result in significant vibrations and cause damage to the elevators.

DATES: Comments must be received by March 3, 1995.

ADDRESSES: Submit comments in triplicate to the Federal Aviation Administration (FAA), Transport Airplane Directorate, ANM–103, Attention: Rules Docket No. 94–NM–175–AD, 1601 Lind Avenue, SW., Renton, Washington 98055–4056. Comments may be inspected at this location between 9:00 a.m. and 3:00 p.m., Monday through Friday, except Federal holidays.

The service information referenced in the proposed rule may be obtained from McDonnell Douglas Corporation, P.O. Box 1771, Long Beach, California 90801–1771, Attention: Business Unit Manager, Technical Administrative Support, Dept. L51, M.C. 2–98. This information may be examined at the FAA, Transport Airplane Directorate, 1601 Lind Avenue, SW., Renton, Washington; or at the FAA, Los Angeles Aircraft Certification Office, Transport Airplane Directorate, 3960 Paramount Boulevard, Lakewood, California.

FOR FURTHER INFORMATION CONTACT: Wahib Mina, Aerospace Engineer, Airframe Branch, ANM–120L, Los Angeles Aircraft Certification Office, FAA, Transport Airplane Directorate, 3960 Paramount Boulevard, Lakewood, California 90712–4137; telephone (310) 627–5324; fax (310) 627–5210.

SUPPLEMENTARY INFORMATION:

Comments Invited

Interested persons are invited to participate in the making of the proposed rule by submitting such written data, views, or arguments as they may desire. Communications shall identify the Rules Docket number and be submitted in triplicate to the address specified above. All communications received on or before the closing date for comments, specified above, will be considered before taking action on the proposed rule. The proposals contained in this notice may be changed in light of the comments received.

Comments are specifically invited on the overall regulatory, economic, environmental, and energy aspects of the proposed rule. All comments submitted will be available, both before and after the closing date for comments, in the Rules Docket for examination by interested persons. A report summarizing each FAA-public contact concerned with the substance of this proposal will be filed in the Rules Docket.

Commenters wishing the FAA to acknowledge receipt of their comments submitted in response to this notice must submit a self-addressed, stamped postcard on which the following statement is made: ''Comments to Docket Number 94–NM–175–AD.'' The postcard will be date stamped and returned to the commenter.

Availability of NPRMs

Any person may obtain a copy of this NPRM by submitting a request to the FAA, Transport Airplane Directorate, ANM–103, Attention: Rules Docket No. 94–NM–175–AD, 1601 Lind Avenue, SW., Renton, Washington 98055–4056.

Discussion

The FAA previously has issued several AD's, applicable to McDonnell Douglas Model MD–11 series airplanes, whose requirements have addressed the problems associated with inadvertent deployment of the slats during flight:

1. AD 92–13–03, amendment 39–8273 (57 FR 27155, June 18, 1992), requires either modification or replacement of the flap control module quadrant. That action was prompted by an incident in which a flightcrew member inadvertently bumped the flap/slat handle, which then placed the handle in an improper position that allowed the slats to extend during cruise.

2. AD 92–14–51, amendment 39–8325 (57 FR 38264, August 24, 1992), requires a one-time inspection of the slat mechanical input system for proper clearance and rigging, and adjustment of the system, if necessary. That action was prompted by two incidents in which the slats extended during flight at cruise altitude because the rigging of the slat input system was out of tolerance in three separate places in the extended position

3. AD 92–26–03, amendment 39–8430 (57 FR 57906, December 8, 1992), requires installing a cover on the flap/slat control module quadrant in the flight compartment. That action was prompted by an incident in which a flightcrew member inadvertently initiated slat deployment by unintentionally depressing the zero degree detent gate while the flap/slat handle was stowed in the retracted detent and the handle was not in the proper position within the detent.

4. AD 93–15–03, amendment 39–8649 (58 FR 41421, August 4, 1993), requires installing a retainer assembly on the upper pedestal flap/slat control module quadrant in the flight compartment. That action was prompted by several incidents in which flightcrew members accidentally bumped the flap/slat handle and the slats deployed during cruise.

Deployment of the slats during flight at cruise altitude could result in abrupt pitch up of the airplane and consequent injury to crew and passengers; it could also create significant vibrations and cause damage to the elevators.

In the preambles to those AD's, the FAA stated that the requirements of each of the AD's were considered to be interim action until final action was identified. The manufacturer had undertaken a design review of the flap/slat system of the Model MD–11 in an effort to positively address the problems associated with it, and the FAA indicated that it would consider further rulemaking once that design review was completed.

The manufacturer's design review has now been completed and the manufacturer has developed an electrically controlled slat system. Installation of this new system will reduce the possibility of uncommanded operation of the slats and inadvertent displacement of the flap/slat handle. The FAA has determined that the system positively addresses the unsafe condition addressed in the previously-issued AD's. In light of this, the FAA has determined that further rulemaking action is indeed necessary, and this

proposed AD follows from that determination.

The FAA has reviewed and approved McDonnell Douglas MD–11 Service Bulletin 27–36, Revision 1, dated December 9, 1994, which describes procedures for installation of the newly-designed electrically controlled slat system. This system involves:

1. modifying and reidentifying the flap/slat module;
2. removing the slat control cables and associated pulleys, pushrods, and spring coupler;
3. modifying the input bellcrank;
4. removing the inboard follow-up cable, drum, and pushrods to the outboard valve;
5. removing the auto-slat actuator and pushrod;
6. replacing the mechanical slat control valves with electro-mechanical slat control valves and installing associated wiring;
7. installing nameplates on the overhead circuit breaker panel;
8. installing circuit breakers and nameplates on the avionics circuit breaker panel;
9. installing relays at the electrical and main avionics rack; and
10. installing lightplates on the pedestal.

Besides its main purpose to reduce the possibility of uncommanded slat operation, other benefits of this new system include greatly simplified flap/slat operation with reduced handle force, enhanced protection against uncontained engine failure, and reduced aircraft weight.

Since an unsafe condition has been identified that is likely to exist or develop on other products of this same type design, the proposed AD would require installation of an electrically controlled slat system. The actions would be required to be accomplished in accordance with the service bulletin described previously.

Installation of this new system necessarily entails removal of the items that previously were required to be installed in accordance with AD's 92–13–03, 92–14–51, 92–26–03, and 93–15–03. Therefore, once the installation of the new system is completed on an airplane, the requirements of the previously-issued AD's are considered terminated.

As a result of recent communications with the Air Transport Association (ATA) of America, the FAA has learned that some operators may misunderstand the legal effect of AD's on airplanes that are identified in the applicability provision of the AD, but that have been altered or repaired in the area addressed by the AD. The FAA points out that all airplanes identified in the applicability provision of an AD are legally subject to the AD. If an airplane has been altered or repaired in the affected area in such a way as to affect compliance with the AD, the owner or operator is required to obtain FAA approval for an alternative method of compliance with the AD, in accordance with the paragraph of each AD that provides for such approvals. A note has been included to this notice to clarify this requirement.

There are approximately 124 Model MD–11 series airplanes of the affected design in the worldwide fleet. The FAA estimates that 43 airplanes of U.S. registry would be affected by this proposed AD, that it would take approximately 68 work hours per airplane to accomplish the proposed actions, and that the average labor rate is $60 per work hour. Required parts would be supplied by the manufacturer at no charge to operators. Based on these figures, the total cost impact of the proposed AD on U.S. operators is estimated to be $175,440, or $4,080 per airplane.

The total cost impact figure discussed above is based on assumptions that no operator has yet accomplished any of the proposed requirements of this AD action, and that no operator would accomplish those actions in the future if this AD were not adopted.

The regulations proposed herein would not have substantial direct effects on the States, on the relationship between the national government and the States, or on the distribution of power and responsibilities among the various levels of government. Therefore, in accordance with Executive Order 12612, it is determined that this proposal would not have sufficient federalism implications to warrant the preparation of a Federalism Assessment.

For the reasons discussed above, I certify that this proposed regulation (1) is not a ''significant regulatory action'' under Executive Order 12866; (2) is not a ''significant rule'' under the DOT Regulatory Policies and Procedures (44 FR 11034, February 26, 1979); and (3) if promulgated, will not have a significant economic impact, positive or negative, on a substantial number of small entities under the criteria of the Regulatory Flexibility Act. A copy of the draft regulatory evaluation prepared for this action is contained in the Rules Docket. A copy of it may be obtained by contacting the Rules Docket at the location provided under the caption **ADDRESSES**.

List of Subjects in 14 CFR Part 39

Air transportation, Aircraft, Aviation safety, Safety.

The Proposed Amendment

Accordingly, pursuant to the authority delegated to me by the Administrator, the Federal Aviation Administration proposes to amend part 39 of the Federal Aviation Regulations (14 CFR part 39) as follows:

PART 39—AIRWORTHINESS DIRECTIVES

1. The authority citation for part 39 continues to read as follows:

Authority: 49 U.S.C. App. 1354(a), 1421 and 1423; 49 U.S.C. 106(g); and 14 CFR 11.89.

§ 39.13 [Amended]

2. Section 39.13 is amended by adding the following new airworthiness directive:

McDonnell Douglas: Docket 94–NM–175–AD.

Applicability: Model MD–11 series airplanes; as listed in McDonnell Douglas MD–11 Service Bulletin 27–36, Revision 1, dated December 9, 1994; certificated in any category.

Note 1: This AD applies to each airplane identified in the preceding applicability provision, regardless of whether it has been modified, altered, or repaired in the area subject to the requirements of this AD. For airplanes that have been modified, altered, or repaired so that the performance of the requirements of this AD is affected, the owner/operator must use the authority provided in paragraph (c) to request approval from the FAA. This approval may address either no action, if the current configuration eliminates the unsafe condition; or different actions necessary to address the unsafe condition described in this AD. Such a request should include an assessment of the effect of the changed configuration on the unsafe condition addressed by this AD. In no case does the presence of any modification, alteration, or repair remove any airplane from the applicability of this AD.

Compliance: Required as indicated, unless accomplished previously.

To prevent inadvertent deployment of the slats during flight, accomplish the following:

(a) Within 24 months after the effective date of this AD, modify the airplane and install an electrically controlled slat control system in accordance with McDonnell Douglas MD–11 Service Bulletin 27–36, Revision 1, dated December 9, 1994.

(b) Accomplishment of the actions required by paragraph (a) of this AD constitutes terminating action for the requirements of the following AD's:

AD No.	Amendment No.	Federal Register citation
92–13–03	39–8273	(57 FR 27155, June 18, 1992).
92–14–51	39–8325	(57 FR 38264, Aug. 24, 1992).

AD No.	Amendment No.	Federal Register citation
92–26–03	39–8430	(57 FR 57906, Dec. 8, 1992).
93–15–03	39–8649	(58 FR 41421, Aug. 4, 1993).

(c) An alternative method of compliance or adjustment of the compliance time that provides an acceptable level of safety may be used if approved by the Manager, Los Angeles Aircraft Certification Office (ACO), FAA, Transport Airplane Directorate. Operators shall submit their requests through an appropriate FAA Principal Maintenance Inspector, who may add comments and then send it to the Manager, Los Angeles ACO.

Note 2: Information concerning the existence of approved alternative methods of compliance with this AD, if any, may be obtained from the Los Angeles ACO.

(d) Special flight permits may be issued in accordance with sections 21.197 and 21.199 of the Federal Aviation Regulations (14 CFR 21.197 and 21.199) to operate the airplane to a location where the requirements of this AD can be accomplished.

Issued in Renton, Washington, on December 30, 1994.

Darrell M. Pederson,

Acting Manager, Transport Airplane Directorate, Aircraft Certification Service.

[FR Doc. 95–308 Filed 1–5–95; 8:45 am]

BILLING CODE 4910–13–U

14 CFR Part 71

[Airspace Docket No. 94–AGL–36]

Proposed Modification of Class D Airspace Areas; Detroit, MI, and Alton, IL

AGENCY: Federal Aviation Administration (FAA), DOT.

ACTION: Notice of proposed rulemaking.

SUMMARY: This notice proposes to modify the Class D airspace areas at Willow Run Airport, Detroit, MI, and St. Louis Regional Airport, Alton, IL. The Class D airspace area at Willow Run Airport, Detroit, MI, would be modified by lowering the vertical limit of the Class D airspace area up to but not including the base altitude of the overlying Detroit, MI, Class B airspace area. The Class D airspace area description at St. Louis Regional Airport, Alton, IL, would be modified by excluding that airspace within the Lambert-St. Louis International Airport, MO, Class B airspace area. The intended effect of this proposal is to eliminate pilot confusion by modifying the controlled airspace areas at Willow Run Airport, Detroit, MI, and St. Louis Regional Airport, Alton, IL.

DATES: Comments must be received on or before February 20, 1995.

ADDRESSES: Send comments on the proposal in triplicate to: Federal Aviation Administration, Office of the Assistant Chief Counsel, AGL–7, Rules Docket No. 94–AGL–36, 2300 East Devon Avenue, Des Plaines, Illinois 60018.

The official docket may be examined in the Office of the Assistant Chief Counsel, Federal Aviation Administration, 2300 E. Devon Avenue, Des Plaines, Illinois. An informal docket may also be examined during normal business hours at the Air Traffic Division, System Management Branch, Federal Aviation Administration, 2300 East Devon Avenue, Des Plaines, Illinois.

FOR FURTHER INFORMATION CONTACT: Jeffrey L. Griffith, Air Traffic Division, System Management Branch, AGL–530, Federal Aviation Administration, 2300 East Devon Avenue, Des Plaines, Illinois 60018, telephone (708) 294–7568.

SUPPLEMENTARY INFORMATION:

Comments Invited

Interested parties are invited to participate in this proposed rulemaking by submitting such written data, views, or arguments as they may desire. Comments that provide the factual basis supporting the views and suggestions presented are particularly helpful in developing reasoned regulatory decisions on the proposal. Comments are specifically invited on the overall regulatory, aeronautical, economic, environmental, and energy-related aspects of the proposal. Communications should identify the airspace docket number and be submitted in triplicate to the address listed above. Commenters wishing the FAA to acknowledge receipt of their comments on this notice must submit with those comments a self-addressed, stamped postcard on which the following statement is made: ''Comments to Airspace Docket No. 94–AGL–36.'' The postcard will be date/time stamped and returned to the commenter. All communications received on or before the specified closing date for comments will be considered before taking action on the proposed rule. The proposal contained in this notice may be changed in light of comments received. All comments submitted will be available for examination in the Rules Docket, FAA, Great Lakes Region, Office of the Assistant Chief Counsel, 2300 East Devon Avenue, Des Plaines, Illinois, both before and after the closing date for comments. A report summarizing each substantive public contact with FAA personnel concerned with this rulemaking will be filed in the docket.

Availability of NPRM's

Any person may obtain a copy of the Notice of Proposed Rulemaking (NPRM) by submitting a request to the Federal Aviation Administration, Office of Public Affairs, Attention: Public Inquiry Center, APA–220, 800 Independence Avenue, S.W., Washington, DC 20591, or by calling (202) 267–3485. Communications must identify the notice number of this NPRM. Persons interested in being placed on a mailing list for future NPRM's should also request a copy of Advisory Circular No. 11–2A, which describes the application procedure.

The Proposal

The FAA is considering an amendment to part 71 of the Federal Aviation Regulations (14 CFR part 71) to modify the Class D airspace areas at Willow Run Airport, Detroit, MI, and St. Louis Regional Airport, Alton, IL. The Class D airspace area at Willow Run Airport, Detroit, MI, would be modified by lowering the vertical limit of the class D airspace area up to but not including the base altitude of the overlying Detroit, MI, Class B airspace area. The Class D airspace area description at St. Louis Regional Airport, Alton, IL, would be modified by excluding that airspace within the Lambert-St. Louis International Airport, MO, Class B airspace area. Airspace reclassification, effective September 16, 1993, has necessitated new guidelines for depicting and describing Class D airspace areas that underlie Class B airspace areas. The intended effect of this proposal is to eliminate pilot confusion by modifying the controlled airspace areas at Willow Run Airport, Detroit, MI, and St. Louis Regional Airport, Alton, IL.

The coordinates for this airspace docket are based on North American Datum 83. Class D airspace designations are published in Paragraph 5000 of FAA Order 7400.9B dated July 18, 1994, and effective September 16, 1994, which is incorporated by reference in 14 CFR 71.1. The Class D airspace designations listed in this document would be published subsequently in the Order.

The FAA has determined that this proposed regulation only involves an established body of technical regulations for which frequent and routine amendments are necessary to keep them operationally current. It, therefore—(1) is not a ''significant regulatory action'' under Executive Order 12866; (2) is not a ''significant rule'' under DOT Regulatory Policies

and Procedures (44 FR 11034; February 26, 1979); and (3) does not warrant preparation of a regulatory evaluation as the anticipated impact is so minimal. Since this is a routine matter that will only effect air traffic procedures and air navigation, it is certified that this rule, when promulgated, will not have a significant economic impact on a substantial number of small entities under the criteria of the Regulatory Flexibility Act.

List of Subjects in 14 CFR Part 71

Airspace, Incorporation by reference, Navigation (air).

The Proposed Amendment

In consideration of the foregoing, the Federal Aviation Administration proposes to amend 14 CFR part 71 as follows:

PART 71—[Amended]

1. The authority citation for 14 CFR part 71 continues to read as follows:

Authority: 49 U.S.C. app. 1348(a), 1354(a), 1510; E.O. 10854, 24 FR 9565, 3 CFR, 1959–1963 Comp., p. 389; 49 U.S.C. 106(g); 14 CFR 11.69.

§ 71.1 [Amended]

2. The incorporation by reference in 14 CFR 71.1 of the Federal Aviation Administration Order 7400.9B, Airspace Designations and Reporting Points, dated July 18, 1994, and effective September 16, 1994, is amended as follows:

Paragraph 5000 General

* * * * *

AGL MI D Detroit, MI [Revised]

Detroit, Willow Run Airport, MI
(Lat. 42°14′16″ N., long 83°31′50″ W.)

That airspace extending upward from the surface to but not including 3,000 feet MSL within a 4.4-mile radius of Willow Run Airport.

* * * * *

AGL IL D Alton, IL [Revised]

Alton, St. Louis Regional Airport, IL
(Lat. 38°53′25″ N., long. 90°02′45″ W.)

That airspace extending upward from the surface to and including 3,000 feet MSL within a 4.2-mile radius of the St. Louis Regional Airport, excluding that airspace within the Lambert-St. Louis International Airport, MO, Class B airspace area. This Class D airspace is effective during the specific dates and times established in advance by a Notice to Airmen. The effective dates and times will thereafter be continuously published in the Airport/Facility Directory.

* * * * *

Issued in Des Plaines, Illinois on December 22, 1994.

Maureen Woods,

Acting Manager, Air Traffic Division.

[FR Doc. 95–364 Filed 1–5–95; 8:45 am]

BILLING CODE 4910–13–M

---

14 CFR Part 71

[Airspace Docket No. 94–AAL–10]

Proposed Amendment to Class E Airspace; Cordova, AK

AGENCY: Federal Aviation Administration [FAA], DOT.

ACTION: Notice of proposed rulemaking.

SUMMARY: This notice proposes to modify the Class E airspace area at Cordova, AK, to accommodate Visual Rules (VFR) traffic in the Cordova area, landing and departing from the Cordova Muni (CKU) airport located about 10 miles west of Merle K. ''Mudhole'' Smith (CDV) airport. Due to terrain limitations, VFR traffic must pass through the northern portion of the Cordova Class E surface area. When the Class E surface area is below basic VFR and Special Visual Flight Rule (SVFR) operations are being conducted, numerous delays are experienced. The area will be depicted on aeronautical charts to provide a reference for pilots operating under VFR.

DATES: Comments must be received on or before February 13, 1995.

ADDRESSES: Send comments on the proposal in triplicate to: Manager, Airspace & System Management Branch, AAL–530, Federal Aviation Administration, Docket No. 94–AAL–10, 222 West 7th Avenue, #14, Anchorage, AK, 99513–7587.

The official docket may be examined in the Office of the Assistant Chief Counsel for the Alaskan Region at the same address.

An informal docket may also be examined during normal business hours at the address listed above.

FOR FURTHER INFORMATION CONTACT: Robert C. Durand, AAL–531, 222 West 7th Avenue #14, Anchorage, AK, 99513–7587; telephone: (907) 271–5898.

SUPPLEMENTARY INFORMATION:

Comments Invited

Interested parties are invited to participate in this proposed rulemaking by submitting such written data, views, or arguments as they may desire. Comments that provide the factual basis supporting the views and suggestions presented are particularly helpful in developing reasoned regulatory decisions on the proposal. Comments are specifically invited on the overall regulatory, aeronautical, economic, environmental, and energy-related aspects of the proposal. Communications should identify the airspace docket number and be submitted in triplicate to the address listed above. Commenters wishing the FAA to acknowledge receipt of their comments on this notice must submit with those comments a self-addressed, stamped postcard on which the following statement is made: ''Comments to Docket No. 94–AAL–10.'' The postcard will be date/time stamped and returned to the commenter. All communications received on or before the closing date for comments will be considered before asking action on the proposed rule. The proposal contained in this notice may be changed in light of comments received. All comments submitted will be available for examination in the Rules Docket both before and after the closing date for comments. A report summarizing each substantive public contact with FAA personnel concerned with this rulemaking will be filed in the docket.

Availability of NPRM's

Any person may obtain a copy of this Notice of Proposed Rulemaking (NPRM) by submitting a request to the Federal Aviation Administration, Manager, System Management Branch, AAL–530, 222 West 7th Avenue, ι14, Anchorage, AK, 99513–7587 or by calling (907) 271–5898. Communications must identify the notice number of this NPRM. Persons interested in being placed on a mailing list for future NPRM's should also request a copy of Advisory Circular No. 11–2A, which describes the application procedures.

The Proposal

The FAA is considering an amendment to part 71 of the Federal Aviation Regulations (14 CFR part 71) to provide required controlled airspace for Instrument Flight Rules (IFR) procedures at the Merle K. ''Mudhole'' Smith Airport and allow Visual Flight Rules (VFR) aircraft to proceed through the northern portion of the current Cordova Class E surface area. The reduction in Class E surface area will segregate aircraft operating under VFR conditions from aircraft operating under IFR procedures. The area would be depicted on appropriate aeronautical charts thereby enabling pilots to circumnavigate the area or otherwise comply with IFR procedures. Class E airspace designations for surface areas of an airport are published in paragraph 6002 of FAA Order 7400.9B, dated July 18, 1994, and effective September 16,

1994, which is incorporated by reference in 14 CFR 71.1. The Class E airspace designation listed in this document would be published subsequently in the Order.

The FAA has determined that this proposed regulation only involved an established body of technical regulations for which frequent and routine amendments are necessary to keep them operationally current. Therefore, this proposed regulation—(1) is not a ''significant regulatory action'' under Executive Order 12866; (2) is not a ''significant rule'' under DOT Regulatory Policies and Procedures (44 FR 11034; February 26, 1979); and (3) does not warrant preparation of a Regulatory Evaluation as the anticipated impact is so minimal. Since this is a routine matter that will only affect air traffic procedures and air navigation, it is certified that this proposed rule will not have a significant economic impact on a substantial number of small entities under the criteria of the Regulatory Flexibility Act.

List of Subjects in 14 CFR Part 71

Airspace, Incorporation by reference, Navigation (air).

The Proposed Amendment

Accordingly, pursuant to the authority delegated to me, the Federal Aviation Administration proposes to amend part 71 of the Federal Aviation Regulations (14 CFR part 71) as follows:

PART 71—[Amended]

1. The authority citation for part 71 continues to read as follows:

Authority: 49 U.S.C. app. 1348(a), 1354(a), 1510; E.O. 10854, 24 FR 9565, 3 CFR, 1959–1963 Comp., p. 389; 49 U.S.C. 106(g); 14 CFR 11.69.

§ 71.1 [Amended]

2. The incorporation by reference in 14 CFR 71.1 of Federal Aviation Administration Order 7400.9B, Airspace Designations and Reporting Points, dated July 18, 1994, and effective September 16, 1994, is amended as follows:

Paragraph 6002—Class E Airspace Areas Designated As a Surface Area For An Airport.

* * * * *

AAL AK E2 Cordova, AK [Revised]

Cordova, Merle K. (MUDHOLE) Smith Airport, AK
(Lat. 60°29′31″ N, long. 145°28′39″ W)
Glacier River NDB
(Lat. 60°29′56″ N, long. 145°28′28″ W)

Within a 4.1-mile radius of the Merle K. (MUDHOLE) Smith Airport and within 2.1 miles each side of the 222° bearing from the Glacier River NDB extending from the 4.1-mile radius to 10 miles southwest of the airport within 2.2 miles each side of the 142° bearing from the NDB extending from the 4.1-mile radius to 10.4 miles southeast of the airport; excluding that airspace north of a line from lat. 60°32′48″N, long. 145°34′06″W; to lat. 60°31′00″N, long. 145°20′00″W.

* * * *

Issued in Anchorage, AK, on December 20, 1994.

Willis C. Nelson,

Manager, Air Traffic Division, Alaskan Region.

[FR Doc. 95–365 Filed 1–5–95; 8:45 am]

BILLING CODE 4910–13–M

---

14 CFR Part 71

[Airspace Docket No. 94–AWA–5]

Proposed Modification of the Birmingham Municipal, AL, Huntsville International-Carl T. Jones Field, AL, Columbia Metropolitan, SC, and Chattanooga Lovell Field, TN, Class C Airspace Areas and Proposed Establishment of the Huntsville International-Carl T. Jones Field, AL, and Chattanooga Lovell Field, TN, Class E Airspace Areas

AGENCY: Federal Aviation Administration (FAA), DOT.

ACTION: Notice of proposed rulemaking.

SUMMARY: This proposed rule would modify the Class C airspace areas at Birmingham Municipal, AL, Huntsville International-Carl T. Jones Field, AL, Columbia Metropolitan, SC, and Chattanooga Lovell Field, TN, Airports. This proposed action would correct the name of the Birmingham Municipal Airport to Birmingham International Airport, and modify the Columbia Metropolitan, SC, airspace designation to reflect continuous operation and availability of services, therein. The effective hours of the Huntsville International-Carl T. Jones Field, AL, and Chattanooga Lovell Field, TN, Class C airspace areas would be amended to coincide with the associated radar approach control facility's hours of operation. Class C airspace areas are predicated on an operational air traffic control tower (ATCT) serviced by a radar approach control facility. This proposal would not change the designated boundaries or altitudes of these Class C airspace areas. In addition, this notice proposes to establish Class E airspace at Chattanooga Lovell Field, TN, and Huntsville International-Carl T. Jones Field, AL, Airports when the associated radar approach control facility is not in operation.

DATES: Comments must be received on or before January 23, 1995.

ADDRESSES: Send comments on the proposal in triplicate to: Federal Aviation Administration, Office of the Chief Counsel, Attention: Rules Docket [AGC–200], Airspace Docket No. 94–AWA–5, 800 Independence Avenue, SW., Washington, DC 20591.

The official docket may be examined in the Rules Docket, Office of the Chief Counsel, Room 916, 800 Independence Avenue, SW., Washington DC, weekdays, except Federal holidays, between 8:30 a.m. and 5:00 p.m.

An informal docket may also be examined during normal business hours at the office of the Regional Air Traffic Division.

FOR FURTHER INFORMATION CONTACT: Patricia P. Crawford, Airspace and Obstruction Evaluation Branch (ATP–240), Airspace-Rules and Aeronautical Information Division, Air Traffic Rules and Procedures Service, Federal Aviation Administration, 800 Independence Avenue, SW., Washington, DC 20591; telephone: (202) 267–9255.

SUPPLEMENTARY INFORMATION:

Comments Invited

Interested parties are invited to participate in this proposed rulemaking by submitting such written data, views, or arguments as they may desire. Comments that provide the factual basis supporting the views and suggestions presented are particularly helpful in developing reasoned regulatory decisions on the proposal. Comments are specifically invited on the overall regulatory, aeronautical, economic, environmental, and energy-related aspects of the proposal. Communications should identify the airspace docket number and be submitted in triplicate to the address listed above. Commenters wishing the FAA to acknowledge receipt of their comments on this notice must submit with those comments a self-addressed, stamped, postcard on which the following statement is made: ''Comments to Airspace Docket No. 94–AWA–5.'' The postcard will be date/time stamped and returned to the commenter. All communications received on or before the specified closing date for comments will be considered before taking action on the proposed rule. The proposal contained in this notice may be changed in light of comments received. All comments submitted will be available for examination in the Rules Docket both before and after the closing date for comments. A report summarizing each

substantive public contact with FAA personnel concerned with this rulemaking will be filed in the docket.

Availability of NPRM's

Any person may obtain a copy of this Notice of Proposed Rulemaking (NPRM) by submitting a request to the Federal Aviation Administration, Office of Public Affairs, Attention: Public Inquiry Center, APA–220, 800 Independence Avenue, SW., Washington, DC 20591, or by calling (202) 267–3485. Communications must identify the notice number of this NPRM. Persons interested in being placed on a mailing list for future NPRM's should also request a copy of Advisory Circular No. 11–2A that describes the application procedure.

The Proposal

The FAA is considering an amendment to part 71 of the Federal Aviation Regulations (14 CFR part 71) to modify the Class C airspace areas at Birmingham Municipal, AL, Huntsville International-Carl T. Jones Field, AL, Columbia Metropolitan, SC, and Chattanooga Lovell Field, TN, Airports. This proposed action would correct the name of the Birmingham Municipal Airport to Birmingham International Airport, and modify the Columbia Metropolitan, SC, airspace designation to reflect continuous operation and availability of services, therein. The effective hours of the Huntsville International-Carl T. Jones Field, AL, and Chattanooga Lovell Field, TN, Class C airspace areas would be amended to coincide with the associated radar approach control facility's hours of operation. Class C airspace areas are predicated on an operational ATCT serviced by a radar approach control facility. This proposal would not change the designated boundaries or altitudes of these Class C airspace areas. In addition, this notice proposes to establish Class E airspace at Chattanooga Lovell Field, TN, and Huntsville International-Carl T. Jones Field, AL, Airports when the associated radar approach control facility is not in operation. Class C and Class E airspace designations are published in paragraphs 4000 and 6002 respectively, of FAA Order 7400.9B dated July 18, 1994, and effective September 16, 1994, which is incorporated by reference in 14 CFR 71.1. The Class C and Class E airspace designations listed in this document would be published subsequently in the Order.

The FAA has determined that this proposed regulation only involves an established body of technical regulations that need frequent and routine amendments to keep them operationally current. It, therefore—(1) is not a ''significant regulatory action'' under Executive Order 12866; (2) is not a ''significant rule'' under DOT Regulatory Policies and Procedures (44 FR 11034; February 26, 1979); and (3) does not warrant preparation of a regulatory evaluation as the anticipated impact is so minimal. Since this is a routine matter that will only affect air traffic procedures and air navigation, it is certified that this rule, when promulgated, will not have a significant impact on a substantial number of small entities under the criteria of the Regulatory Flexibility Act.

List of Subjects in 14 CFR Part 71

Airspace, Incorporation by reference, Navigation (air).

The Proposed Amendment

In consideration of the foregoing, the Federal Aviation Administration proposes to amend 14 CFR part 71 as follows:

PART 71—[AMENDED]

1. The authority citation for 14 CFR part 71 continues to read as follows:

Authority: 49 U.S.C. app. 1348(a), 1354(a), 1510; E.O. 10854, 24 FR 9565, 3 CFR, 1959–1963 Comp., p. 389; 49 U.S.C. 106(g); 14 CFR 11.69.

§ 71.1 [Amended]

2. The incorporation by reference in 14 CFR 71.1 of the Federal Aviation Administration Order 7400.9B, Airspace Designations and Reporting Points, dated July 18, 1994, and effective September 16, 1994, is amended as follows:

Paragraph 4000—Subpart C-Class C Airspace

* * * * *

ASO AL C Birmingham International Airport, AL [Revised]

Birmingham International Airport, AL
(Lat. 33°33′50″ N., long. 86°45′16″ W.)

That airspace extending upward from the surface to and including 4,600 feet MSL within a 5-mile radius of the Birmingham International Airport, and that airspace extending upward from 2,400 feet MSL to 4,600 feet MSL within a 10-mile radius of Birmingham International Airport from the 343° bearing from the airport clockwise to the 231° bearing from the airport, and that airspace extending upward from 1,900 feet MSL to 4,600 feet MSL within a 10-mile radius of the airport from the 231° bearing from the airport clockwise to the 343° bearing from the airport.

* * * * *

ASO AL C Huntsville International-Carl T. Jones Field, AL [Revised]

Huntsville International-Carl T. Jones Field, AL
(Lat. 34°38′25″ N., long. 86°46′23″ W.)
Redstone Army Air Field
(Lat. 34°40′43″ N., long. 86°41′05″ W.)

That airspace within a 5-mile radius of the Huntsville International-Carl T. Jones Field extending upward from the surface to and including 4,600 feet MSL, excluding that airspace within a 1-mile radius of the Redstone Army Air Field; and that airspace within a 10-mile radius of the airport from the 015° bearing from the airport clockwise to the 145° bearing from the airport extending upward from 2,400 feet MSL to and including 4,600 feet MSL; and that airspace within a 10-mile radius of the airport from the 145° bearing from the airport clockwise to the 015° bearing from the airport extending upward from 2,000 feet MSL to and including 4,600 feet MSL. All airspace contained within Restricted Areas R–2104A, R–2104B, and R–2104C is excluded from this Class C airspace area when they are active. This Class C airspace area is effective during the specific dates and times established in advance by a Notice to Airmen. The effective date and time will continuously be published in the Airport/Facility Directory.

* * * * *

ASO SC C Columbia Metropolitan Airport, SC [Revised]

Columbia Metropolitan Airport, SC
(Lat. 33°56′26″ N., long. 81°07′09″ W.)
Columbia Owens Downtown Airport
(Lat. 33°58′15″ N., long. 80°59′44″ W.)

That airspace extending upward from the surface to and including 4,200 feet MSL within a 5-mile radius of the Columbia Metropolitan Airport excluding that airspace within a 2-mile radius of the Columbia Owens Downtown Airport; and that airspace extending upward from 2,000 feet MSL to 4,200 feet MSL within a 10-mile radius of the Columbia Metropolitan Airport from the 004° bearing from the airport clockwise to the 094° bearing from the airport, and that airspace extending upward from 1,800 feet MSL to 4,200 feet MSL within a 10-mile radius of the airport from the 094° bearing from the airport clockwise to the 004° bearing from the airport.

* * * * *

ASO TN C Chattanooga, Lovell Field, TN [Revised]

Chattanooga, Lovell Field, TN
(Lat. 35°02′07″ N., long. 85°12′14″ W.)

That airspace within a 5-mile radius of Lovell Field, extending upward from the surface to and including 4,700 feet MSL; and that airspace within a 10-mile radius of the airport from the 350° bearing from the airport clockwise to the 058° bearing from the airport extending upward from 2,200 feet MSL to and including 4,700 feet MSL; and that airspace within a 10-mile radius of the airport from the 058° bearing from the airport clockwise to the 234° bearing from the airport extending upward from 2,600 feet MSL to and including 4,700 feet MSL; and that airspace within a 10-mile radius of the

airport from the 234° bearing from the airport clockwise to the 350° bearing from the airport extending upward from 3,300 feet MSL to and including 4,700 feet MSL. This Class C airspace area is effective during the specific dates and times established in advance by a Notice to Airmen. The effective date and time will thereafter be continuously published in the Airport/Facility Directory.

* * * * *

Paragraph 6002—Class E Airspace Areas Designated as a Surface Area for an Airport

* * * * *

ASO AL E2 Huntsville, AL [New]

Huntsville International-Carl T. Jones Field, AL
(Lat. 34°38′25″ N., long. 86°46′23″ W.)
Redstone Army Air Field
(Lat. 34°40′43″ N., long. 86°41′05″ W.)

Within a 5-mile radius of the Huntsville International-Carl T. Jones Field Airport, excluding that airspace within a 1-mile radius of the Redstone Army Air Field. This Class E airspace area is effective during the specific dates and times established in advance by a Notice to Airmen. The effective date and time will thereafter be continuously published in the Airport/Facility Directory.

* * * * *

ASO TN E2 Chattanooga, Lovell Field, TN [New]

Chattanooga, Lovell Field, TN
(Lat. 35°02′07″ N., long. 85°12′14″ W.)

Within a 5-mile radius of Lovell Field. This Class E airspace area is effective during the specific dates and times established in advance by a Notice to Airmen. The effective date and time will thereafter be continuously published in the Airport/Facility Directory.

* * * * *

Issued in Washington, DC, on December 28, 1994.

Harold W. Becker,

Manager, Airspace-Rules and Aeronautical Information Division.

[FR Doc. 95-357 Filed 1-5-95, 8:45am]

BILLING CODE 4910–13–P

---

14 CFR Part 71

[Airspace Docket No. 93–AEA–02]

Proposed Modification of Class E Airspace; Dunkirk, NY

AGENCY: Federal Aviation Administration (FAA), DOT.

ACTION: Notice of proposed rulemaking.

SUMMARY: This notice proposes to revise Class E Airspace in the vicinity of Dunkirk, NY, to provide additional controlled airspace for aircraft operations conducted under instrument flight rules (IFR) to and from the Angola Airport, NY. Airspace reclassification, in effect as of September 16, 1993, has discontinued the use of the term ''transition area,'' and certain controlled airspace areas designated from 700 feet above the surface of the earth are now Class E airspace.

DATES: Comments must be received on or before February 1, 1995.

ADDRESSES: Send comments on the proposal in triplicate to: Michael Sammartino, Manager, System Management Branch, AEA–530, Docket No. 93–AEA–02, F.A.A. Eastern Region, Fitzgerald Federal Building No. 111, John F. Kennedy Int'l Airport, Jamaica, NY 11430.

The official docket may be examined in the Office of the Assistant Chief Counsel, AEA–7, at the same address.

An informal docket may also be examined during normal business hours in the Office of the Manager, System Management Branch, Air Traffic Division, at the address shown above.

FOR FURTHER INFORMATION CONTACT: Frank Jordan, Designated Airspace Specialist, System Management Branch, AEA–530, F.A.A. Eastern Region, Fitzgerald Federal Building No. 111, John F. Kennedy International Airport, Jamaica, NY 11430; telephone: (718) 553–0857.

SUPPLEMENTARY INFORMATION:

Comments Invited

Interested parties are invited to participate in this proposed rulemaking by submitting such written data, views or arguments as they may desire. Comments that provide the factual basis supporting the views and suggestions presented are particularly helpful in developing reasoned regulatory decisions on the proposal. Comments are specifically invited on the overall regulatory, aeronautical, economic, environmental, and energy-related aspects of the proposal. Communications should identify the airspace docket number and be submitted in triplicate to the address listed above. Commenters wishing the FAA to acknowledge receipt of their comments on this notice must submit with those comments a self-addressed, stamped postcard on which the following statement is made: ''Comments to Airspace Docket No. 93–ARA–02''. The postcard will be date/time stamped and returned to the commenter. All communications received on or before the specified closing date for comments will be considered before taking action on the proposed rule. The proposal contained in this notice may be changed in light of comments received. All comments submitted will be available for examination in the Rules Docket both before and after the closing date for comments. A report summarizing each substantive public contact with FAA personnel concerned with this rulemaking will be filed in the docket.

Availability of NPRMs

Any person may obtain a copy of this Notice of Proposed Rulemaking (NPRM) by submitting a request to the Office of the Assistant Chief Council, AEA–7, F.A.A. Eastern Region, Fitzgerald Federal Building No. 111, John F. Kennedy International Airport, Jamaica, NY 11430. Communications must identify the notice number of this NPRM. Persons interested in being placed on a mailing list for future NPRMs should also request a copy of Advisory Circular No. 11–2A, which describes the application procedure.

The Proposal

The FAA is considering an amendment to part 71 of the Federal Aviation Regulations (14 CFR part 71) to establish additional Class E Airspace for IFR aircraft operations in the vicinity of Dunkirk, NY. Airspace reclassification, in effect as of September 16, 1993, has discontinued the use of the term ''Transition Area,'' and certain controlled airspace areas extending upward from 700 feet above the surface of the earth are now Class E airspace. The coordinates for this airspace docket are based on North American Datum 83. Class E airspace areas extending upward from 700 feet above the surface of the earth are published in Paragraph 6005 of FAA Order 7400.9B, Airspace Designations and Reporting Points, dated July 18, 1994, and effective September 16, 1994, which is incorporated by reference in 14 CFR 71.1. The Class E airspace designation listed in this document would be published subsequently in the Order.

The FAA has determined that this proposed regulation only involves an established body of technical regulations for which frequent and routine amendments are necessary to keep them operationally current. It, therefore: (1) is not a ''significant regulatory action'' under Executive Order 12866; (2) is not a ''significant rule'' under DOT Regulatory Policies and Procedures (44 FR 11034; February 26, 1979); and (3) does not warrant preparation of a regulatory evaluation as the anticipated impact is so minimal. Since this is a routine matter that will only affect air traffic procedures and air navigation, it is certified that, when promulgated, this rule will not have a significant economic impact on a substantial number of small entities under the criteria of the Regulatory Flexibility Act.

List of Subjects in 14 CFR Part 71

Airspace, Incorporation by reference, Navigation (air).

The Proposed Amendment

In consideration of the foregoing, the Federal Aviation Administration proposes to amend 14 CFR part 71 as follows:

PART 71—[AMENDED]

1. The authority citation for part 71 continues to read as follows:

Authority: 49 U.S.C. app. 1348(a), 1354(a), 1510; E.O. 10854, 24 FR 9565, 3 CFR, 1959–1963 Comp., p. 389; 49 U.S.C. 106(g); 14 CFR 11.69.

§ 71.1 [Amended]

2. The incorporation by reference in 14 CFR 71.1 of the Federal Aviation Administration Order 7400.9B, Airspace Designations and Reporting Points, dated July 18, 1994, and effective September 16, 1994, is amended as follows:

Paragraph 6005—Class E airspace areas extending upward from 700 feet or more above the surface of the earth

* * * * *

AEA NY TA Dunkirk, NY [Revised]

Chautauqua County/Dunkirk Airport, Dunkirk, NY
(Lat. 42°29′36″N., long. 79°16′19″W.)
Dunkirk VORTAC, NY
(Lat. 42°29′26″N., long. 79°16′27″W.)
Angola Airport, NY
(Lat. 42°39′37″N., long. 78°59′28″W.)

That airspace extending upward from 700 feet above the surface within a 6.6-mile radius of the Chautauqua County/Dunkirk Airport and within an 11.8-mile radius of the Chautauqua County/Dunkirk Airport extending clockwise from a 022° to a 232° bearing from the Chautauqua County/Dunkirk Airport and within a 6.3-mile radius of the Angola Airport and that airspace within 5.3 miles northwest of the 051°(T) 058°(M) radial of the Dunkirk VORTAC and within 5.3 miles northwest of the 231°(T) 238°(M), extending southwest along said radials from the 6.3-mile radius to 9.9 miles southwest of the VORTAC.

* * * * *

Issued in Jamaica, New York, on December 20, 1994.

John S. Walker,

Manager, Air Traffic Division.

[FR Doc. 95–366 Filed 1–5–95; 8:45 am]

BILLING CODE 4910–13–M

14 CFR Part 73

[Airspace Docket No. 94–AWP–15]

Proposed Establishment of Restricted Area R–2311, Yuma Proving Ground, Yuma, AZ

AGENCY: Federal Aviation Administration (FAA), DOT.

ACTION: Notice of proposed rulemaking.

SUMMARY: This proposed rule would establish Restricted Area R–2311, Yuma Proving Ground, Yuma, AZ, to replace the Controlled Firing Area (CFA) now in use near Yuma, AZ. The proposal is in support of the U.S. Army weapons and ammunition acceptance testing mission being relocated from Jefferson Proving Ground, IN.

DATES: Comments must be received on or before February 15, 1995.

ADDRESSES: Send comments on the proposal in triplicate to: Manager, Air Traffic Division, AWP–500, Docket No. 94–AWP–15, Federal Aviation Administration, P.O. Box 92007, Worldway Postal Center, Los Angeles, CA 90009.

The official docket may be examined in the Rules Docket, Office of the Chief Counsel, Room 916, 800 Independence Avenue, SW., Washington, DC, weekdays, except Federal holidays, between 8:30 a.m. and 5:00 p.m.

An informal docket may also be examined during normal business hours at the office of the Regional Air Traffic Division.

FOR FURTHER INFORMATION CONTACT: James R. Robinson, Military Operations Program Office (ATM–420), Office of Air Traffic System Management, Federal Aviation Administration, 800 Independence Avenue, SW., Washington, D.C. 20591; telephone: (202) 493–4050.

SUPPLEMENTARY INFORMATION:

Comments Invited

Interested parties are invited to participate in this proposed rulemaking by submitting such written data, views, or arguments as they may desire. Comments that provide the factual basis supporting the views and suggestions presented are particularly helpful in developing reasoned regulatory decisions on the proposal. Comments are specifically invited on the overall regulatory, aeronautical, environmental, economic, and energy-related aspects of the proposal. Communications should identify the airspace docket number and be submitted in triplicate to the address listed above. Commenters wishing the FAA to acknowledge receipt of their comments on this notice must submit with those comments a self-addressed, stamped postcard on which the following statement is made: ''Comments to Airspace Docket No. 94–AWP–15.'' The postcard will be date/time stamped and returned to the commenter. Send comments on environmental and land use aspects to: Commander, U.S. Army, Yuma Proving Ground, Attn: STEYP-ES, (Mr. Lance Vander Zyl), Yuma, AZ 85365–9107. All communications received on or before the specified closing date for comments will be considered before taking action on the proposed rule. The proposal contained in this notice may be changed in light of comments received. All comments submitted will be available for examination in the Rules Docket both before and after the closing date for comments. A report summarizing each substantive public contact with FAA personnel concerned with this rulemaking will be filed in the docket.

Availability of NPRM's

Any person may obtain a copy of this Notice of Proposed Rulemaking (NPRM) by submitting a request to the Federal Aviation Administration, Office of Public Affairs, Attention: Public Inquiry Center, APA–220, 800 Independence Avenue, SW., Washington, DC 20591, or by calling (202) 267–3485. Communications must identify the notice number of this NPRM. Persons interested in being placed on a mailing list for future NPRM's should also request a copy of Advisory Circular No. 11–2A, which describes the application procedure.

The Proposal

The FAA is considering an amendment to part 73 of the Federal Aviation Regulations (14 CFR part 73) to establish Restricted Area, R–2311, Yuma Proving Ground, Yuma, AZ. The proposed new restricted area would be within the lateral boundaries of the existing KOFA South CFA and would extend from the surface to 3,500 feet mean sea level (MSL). The times of use would be identical to the existing KOFA South CFA, sunrise to sunset, Monday–Saturday; other times by NOTAM. The closure of Jefferson Proving Ground, IN, and the subsequent move of the munitions testing function to Yuma Proving Ground has created a need for uninterrupted use of this airspace to support the U.S. Army test and evaluation command mission. These activities can not be fully accommodated on existing ranges located at Yuma Proving Ground. The restrictions and limitations on CFA activity are not amenable to the type of activity required for munitions

production acceptance testing. The proposed restricted area would provide improved capabilities for the ammunition acceptance testing program and mine testing facility activities. The proposed restricted area would be joint use. When not being utilized by Yuma Proving Ground, it would be released to the controlling agency, Yuma Approach Control. The coordinates for this airspace docket are based on North American Datum 83. Section 73.23 of part 73 of the Federal Aviation Regulations was republished in FAA Order 7400.8B dated March 9, 1994.

The FAA has determined that this proposed regulation only involves an established body of technical regulations for which frequent and routine amendments are necessary to keep them operationally current. It, therefore—(1) is not a ''significant regulatory action'' under Executive Order 12866; (2) is not a ''significant rule'' under DOT Regulatory Policies and Procedures (44 FR 11034; February 26, 1979); and (3) does not warrant preparation of a regulatory evaluation as the anticipated impact is so minimal. Since this is a routine matter that will only affect air traffic procedures and air navigation, it is certified that this rule, when promulgated, will not have a significant economic impact on a substantial number of small entities under the criteria of the Regulatory Flexibility Act.

Environmental Review

An environmental impact statement (EIS) concerning the proposal has been prepared by the U.S. Army. The FAA will review the EIS prior to an FAA final decision on the proposal. The results of the review will be addressed in any subsequent rulemaking action.

List of Subjects in 14 CFR Part 73

Airspace, Navigation (air).

The Proposed Amendment

In consideration of the foregoing, the Federal Aviation Administration proposes to amend 14 CFR part 73 as follows:

PART 73—[AMENDED]

1. The authority citation for part 73 continues to read as follows:

Authority: 49 U.S.C. app. 1348(a), 1354(a), 1510, 1522; E.O. 10854, 24 FR 9565, 3 CFR, 1959–1963 Comp., p. 389; 49 U.S.C. 106(g); 14 CFR 11.69.

2. Section 73.23 is amended as follows:

§ 73.23 [Amended]

R–2311 Yuma Proving Ground, Yuma, AZ [New]

Boundaries. Beginning at lat. 32°46′48″ N., long. 114°19′16″ W.; to lat. 32°51′20″ N., long. 114°19′04″ W.; to lat. 32°51′53″ N., long. 114°03′40″ W.; to lat. 32°46′48″ N., long. 114°03′51″ W.;
to the point of beginning.

Altitudes. Surface to 3,500 feet MSL.

Time of designation. Sunrise to sunset, Monday–Saturday; other times by NOTAM.

Controlling Agency. Yuma Approach Control.

Using Agency. U.S. Army, Commanding Officer, Yuma Proving Ground, Yuma, AZ.

Issued in Washington, DC, on December 21, 1994.

Harold W. Becker,

Manager, Airspace-Rules and Aeronautical Information Division.

[FR Doc. 95–367 Filed 1–5–95, 8:45am]

BILLING CODE 4910–13–P

DEPARTMENT OF THE TREASURY

Internal Revenue Service

26 CFR Part 1

[INTL–933–86]

RIN 1545–AL98

Computation of Foreign Taxes Deemed Paid Under Section 902 Pursuant to a Pooling Mechanism for Undistributed Earnings and Foreign Taxes

AGENCY: Internal Revenue Service (IRS), Treasury.

ACTION: Notice of proposed rulemaking.

SUMMARY: This document contains proposed income tax regulations relating to the computation of foreign taxes deemed paid under section 902. Changes to the applicable law were made by the Tax Reform Act of 1986 and by the Technical and Miscellaneous Revenue Act of 1988 (TAMRA). These regulations would provide guidance needed to comply with these changes and affect foreign corporations and their United States corporate shareholders.

DATES: Comments and requests for a public hearing must be received by April 6, 1995.

ADDRESSES: Send submissions to: CC:DOM:CORP:T:R (INTL–933–86), room 5228, Internal Revenue Service, POB 7604, Ben Franklin Station, Washington, D.C. 20044. In the alternative, submissions may be hand delivered to: CC:DOM:CORP:T:R (INTL–933–86), Courier's Desk, Internal Revenue Service, 1111 Constitution Avenue NW, Washington, DC.

FOR FURTHER INFORMATION CONTACT: Concerning the regulations, Caren S. Shein (202) 622–3850, or Kristine K. Schlaman (202) 622–3840.

SUPPLEMENTARY INFORMATION:

Paperwork Reduction Act

The collection of information contained in this notice of proposed rulemaking has been submitted to the Office of Management and Budget for review in accordance with the Paperwork Reduction Act (44 U.S.C. 3504(h)). Comments on the collection of information should be sent to the Office of Management and Budget, Attention: Desk Officer for the Department of the Treasury, Office of Information and Regulatory Affairs, Washington, DC 20503, with copies to the Internal Revenue Service, Attention: IRS Reports Clearance Officer PC:FP, Washington, DC 20224.

The collection of information requirement in this regulation is in § 1.902–1(e). This information is required by the IRS to implement section 902 as amended by the Tax Reform Act of 1986. This information will be used by law enforcement authorities with respect to the enforcement of Federal laws. The likely respondents are businesses or other for-profit institutions.

Estimated total annual reporting burden: 225,520 hours.
Estimated total annual burden per respondent: 112.76 hours.
Estimated number of respondents: 2000.
Estimated annual frequency of response: one.

Background

This document contains proposed amendments to the Income Tax Regulations (26 CFR part 1) under section 902 of the Internal Revenue Code of 1986. These amendments are proposed to conform the regulations to section 1202(a) of the Tax Reform Act of 1986 (Pub. L. 99–514, 100 Stat. 1085), and to section 1012(b) of the Technical and Miscellaneous Revenue Act of 1988 (TAMRA) (Pub. L. 100–647, 102 Stat. 3242).

Proposed Effective Dates

These regulations are proposed to be effective for taxable years beginning after December 31, 1986.

Explanation of Provisions

Section 1.902–1

Section 902 provides a mechanism by which foreign income taxes paid by a foreign corporation are deemed paid by a domestic corporate shareholder owning at least 10 percent of the voting stock of the foreign corporation. Paragraphs (a) (1) through (12) of

§ 1.902–1 provide definitions applicable for purposes of section 902 and §§ 1.902–1 and 1.902–2.

Paragraph (a)(1) defines a domestic shareholder that is eligible for the section 902 credit as a domestic corporation that owns directly at least 10 percent of the voting stock of a foreign corporation at the time it receives a dividend.

Revenue Ruling 71–141, 1971–1 C.B. 211, allows two 50 percent domestic corporate general partners of a domestic general partnership to claim a credit for taxes deemed paid under section 902 for foreign taxes paid by a foreign corporation in which the partnership owned 40 percent of the voting stock. The Internal Revenue Service is considering under what other circumstances a section 902 credit with respect to stock held by a partnership or other pass-through entity should flow through to a domestic corporation. The Service requests comments on whether the holding of Rev. Rul. 71–141 should be expanded to allow taxes paid by a foreign corporation to be considered deemed paid by domestic corporations that are partners in domestic limited partnerships or foreign partnerships, shareholders in limited liability companies, and beneficiaries of domestic or foreign trusts and estates or interest holders in other pass-through entities. The comments should address how the Service would administer any proposed expansion of the revenue ruling to allow deemed paid credits through other pass-through entities.

Paragraphs (a) (2) through (6) define the ownership requirements that must be met before foreign income taxes of a first-, second-, or third-tier foreign corporation will be deemed paid by an upper-tier foreign corporation or a domestic shareholder.

Paragraph (a)(7) defines foreign income taxes as those creditable under sections 901 and 903. Paragraph (a)(8) defines post-1986 foreign income taxes generally as foreign income taxes paid, accrued, or deemed paid for the current year and any foreign income taxes paid, accrued, or deemed paid in prior taxable years beginning after December 31, 1986, to the extent the foreign taxes were not paid or deemed paid on earnings previously distributed to or otherwise included in the income of a shareholder.

Paragraph (a)(9) defines post-1986 undistributed earnings generally as the amount of earnings and profits accumulated by a foreign corporation in taxable years beginning after December 31, 1986, determined as of the close of the taxable year in which a dividend is distributed. Post-1986 undistributed earnings are not reduced by dividend distributions and deemed inclusions in the current year but are reduced by dividend distributions and deemed inclusions in prior post-1986 taxable years.

Paragraph (a)(10) defines pre-1987 accumulated profits as earnings and profits accumulated in taxable years beginning before January 1, 1987, and in later years if the special effective date of paragraph (a)(13) applies. Paragraph (a)(13) provides a special effective date applicable when the 10-percent ownership requirements of section 902(c)(3)(B) and paragraphs (a) (1) through (4) are first met with respect to a foreign corporation in a taxable year of the foreign corporation beginning after December 31, 1986. For post-1986 years prior to the first year in which the ownership requirements of section 902(c)(3)(B) are met, foreign taxes deemed paid must be computed under the rules of section 902 as in effect prior to the Tax Reform Act of 1986. See section 902(c)(6).

The proposed regulations specify that both post-1986 undistributed earnings and pre-1987 accumulated profits include a foreign corporation's entire earnings and profits. Further, for both post-1986 undistributed earnings and pre-1987 accumulated profits that are distributed in a taxable year beginning after December 31, 1986, the proposed regulations state that special allocations of accumulated profits and taxes to particular shareholders, whether required or permitted under foreign law or an agreement among the shareholders, will be disregarded. See paragraphs (a)(9)(iv) and (a)(10)(ii).

The intent of the proposed regulations is to reverse the Tax Court's decision in *Vulcan v. Commissioner,* 96 T.C. 410 (1991), affd. per curiam 959 F.2d 973 (11th Cir. 1992), for distributions in taxable years beginning after December 31, 1986, out of pre-1987 accumulated profits. In addition, the regulations are intended to make clear that the decision in *Vulcan* is not applicable to distributions out of post-1986 undistributed earnings.

In *Vulcan,* the Tax Court held that the term ''accumulated profits'' as used in the denominator of the section 902 deemed paid credit fraction prior to the Tax Reform Act of 1986 does not necessarily mean all of a foreign corporation's accumulated profits. The Tax Court concluded that the pre-1987 statute and regulations under section 902 were unclear and based its decision on what it viewed as the policy behind section 902. The pre-Tax Reform Act of 1986 version of section 902 described the creditable foreign tax as that levied ''on or with respect to the accumulated profits of the foreign corporation from which such dividends were paid.'' The Tax Court in *Vulcan* read this language as linking ''accumulated profits'' to the foreign tax paid by the subsidiary and, based in part on this reading, computed the section 902 credit using only the amount of accumulated profits on which the foreign tax was levied.

Contrary to the Tax Court's analysis, the term ''accumulated profits'' as used in pre-1987 section 902 generally is equated with, and determined in accordance with, United States tax principles relating to pre-tax earnings and profits. *See United States* v. *Goodyear Tire and Rubber Company,* 493 U.S. 132, 139 (1989). Earnings and profits are a measure of a corporation's ability to pay dividends. They generally are determined at the corporate level and include all income earned by the corporation, whether or not all or any portion of the income is subject to tax. The ''on or with respect to'' language on which the Tax Court focused simply reflects the annual nature of the section 902 credit calculation prior to 1986, and does not permit or require the computation of the deemed paid credit using less than all of the foreign corporation's accumulated profits.

The 1986 Act changes to section 902(a) eliminated the language the Tax Court relied on in *Vulcan* to link the taxes to be credited to the particular profits on which they were paid. See H.R. Rep. (Conf.) 841, 99th Cong., 2d Sess. II–589 (1986). As amended in 1986, section 902 simply defines the pool of creditable taxes as ''any income, war profits, or excess profits taxes paid by the foreign corporation'' to the foreign taxing authority. See section 902(c)(4). The proposed regulations make clear that *Vulcan* does not apply for years to which the pooling rules of new section 902 apply.

The proposed regulations would reverse *Vulcan* for distributions out of pre-1987 accumulated profits in post-1986 taxable years. The *Vulcan* reversal for distributions out of pre-1987 accumulated profits thus will have a continuing impact in post-1986 years. The Internal Revenue Service published this position in Rev. Rul. 87–14, 1987–1 C.B. 181. Thus, taxpayers had notice of the rule prior to the issuance of these proposed regulations.

Paragraph (a)(10)(iii) provides that foreign income taxes of a particular year with pre-1987 accumulated profits must be reduced by the amount of foreign income taxes deemed paid on a distribution or inclusion out of pre-1987 accumulated profits of that year. Foreign income taxes paid or accrued on or with

respect to pre-1987 accumulated profits must be translated into United States dollars under the rules in effect prior to the effective date of the Tax Reform Act of 1986. See *The Bon Ami Company v. Commissioner,* 39 B.T.A. 825 (1939).

Paragraph (b)(1) provides rules for computing the foreign income taxes deemed paid by a domestic shareholder, first-tier corporation or second-tier corporation for any taxable year in which a domestic shareholder receives a dividend from a first-tier corporation paid out of post-1986 undistributed earnings, or an upper-tier corporation receives a dividend from a lower-tier corporation paid out of post-1986 undistributed earnings.

Paragraph (b)(2) provides rules for allocating dividends to post-1986 undistributed earnings and pre-1987 accumulated profits when a foreign corporation pays a dividend out of both post-1986 undistributed earnings and pre-1987 accumulated profits and out of more than one pre-1987 taxable year. Paragraph (b)(3) provides that the amount of foreign taxes deemed paid on a dividend out of pre-1987 accumulated profits must be computed under section 902 as in effect prior to the effective date of the Tax Reform Act of 1986.

Paragraph (b)(4) provides that if a foreign corporation makes a distribution out of current earnings and profits that is treated as a dividend under section 316(a)(2) in a taxable year in which the corporation has a deficit in post-1986 undistributed earnings and the sum of current plus accumulated earnings and profits is zero or less than zero, then no foreign income taxes shall be deemed paid with respect to the dividend. See S. Rep. No. 313, 99th Cong., 2d Sess. 321 (1986). The dividend reduces post-1986 undistributed earnings and accumulated earnings and profits.

Paragraph (c) provides special rules applicable in computing foreign taxes deemed paid by a domestic shareholder or upper-tier corporation. Paragraph (c)(1) provides that foreign taxes deemed paid must be computed separately for dividends received from each foreign corporation. Further, if a domestic shareholder receives a dividend from a first-tier corporation and in the same taxable year the first-tier corporation receives a dividend from one or more lower-tier corporations, then foreign taxes deemed paid are computed by starting at the lowest tier and working upward.

Paragraph (c)(2) requires a domestic shareholder to include in gross income as a dividend under section 78 all foreign taxes deemed paid for the taxable year. Foreign corporations are not required to include foreign taxes deemed paid in gross income under section 78.

Paragraph (c)(9) incorporates the rules of section 905(c) to determine the effect of a section 482 adjustment on post-1986 undistributed earnings and post-1986 foreign income taxes. In general, section 905(c) and the regulations under that section require a reduction in the pool of creditable foreign income taxes when a taxpayer fails to exhaust its administrative remedies to obtain a refund of foreign income taxes paid following a section 482 adjustment. See also Rev. Rul. 92–74, 1992–2 C.B. 156.

Paragraph (d) provides rules relating to the computation of foreign taxes deemed paid with respect to dividends from controlled foreign corporations. Generally, dividend distributions are treated as made pro rata out of a controlled foreign corporation's earnings in each section 904(d) separate category. Section 1.904–5(d). Paragraph (d)(3)(i) provides that dividends distributed out of earnings accumulated before a foreign corporation became a controlled foreign corporation are treated as dividends from a noncontrolled section 902 corporation, whether the earnings are post-1986 undistributed earnings or pre-1987 accumulated profits.

Pursuant to a grant of regulatory authority in section 904(d)(2)(E)(i), and consistent with proposed amendments to § 1.904–4(g)(3), paragraph (d)(3)(ii) generally limits the application of the Technical and Miscellaneous Revenue Act of 1988 amendment of section 904(d)(2)(E)(i) (restricting look-through treatment on dividends out of pre-acquisition earnings of a controlled foreign corporation) to U.S. shareholders that acquire more than 90% voting stock ownership in an existing controlled foreign corporation (including both U.S. shareholders who previously owned no voting stock in the controlled foreign corporation and U.S. shareholders that previously owned less than 10% of the controlled foreign corporation's voting stock). A U.S. shareholder that acquires more than 90% ownership of a controlled foreign corporation's voting stock must begin a new set of post-1986 undistributed earnings and post-1986 foreign income taxes pools on the first day of the first taxable year in which it owns more than 90% of the voting stock. Earnings attributable to the pre-acquisition period are treated as post-1986 undistributed earnings or pre-1987 accumulated profits of a noncontrolled section 902 corporation. Distributions will be deemed to come first out of the post-acquisition earnings pools to the extent thereof, and then out of pre-acquisition earnings.

A U.S. shareholder that acquires stock resulting in ownership of 90% or less of an existing controlled foreign corporation's voting stock is entitled to look-through treatment on dividends paid out of pre-acquisition earnings of the controlled foreign corporation. The shareholder need not start new pools of earnings and taxes as a result of its acquisition of voting stock of the controlled foreign corporation.

Paragraph (e) describes the information a domestic shareholder must furnish with respect to foreign income taxes for which it claims a deemed paid credit.

Paragraph (f) provides examples illustrating the rules of § 1.902–1, and paragraph (g) provides that § 1.902–1 applies to distributions in and after a foreign corporation's first taxable year beginning on or after January 1, 1987.

Section 1.902–2

Section 1.902–2 provides rules for computing foreign taxes deemed paid when there are deficits in post-1986 undistributed earnings or pre-1987 accumulated profits (determined under section 902) of a foreign corporation. Paragraph (a)(1) provides that if there is a deficit in post-1986 undistributed earnings of a first-, second-, or third-tier corporation and the corporation makes a distribution to shareholders, then the deficit shall be carried back to the most recent pre-effective date taxable year of the first-, second-, or third-tier corporation with positive accumulated profits determined under section 902. The amount carried back will be removed from post-1986 undistributed earnings, but any foreign income taxes paid with respect to those earnings will not be carried back to a taxable year beginning before January 1, 1987 (or a later year if the special effective date of § 1.902–1(a)(13) applies) and will not be removed from post-1986 foreign income taxes.

Paragraph (b)(1) provides that if there is a deficit in accumulated profits determined under section 902 of a first-, second-, or third-tier corporation as of the end of its last pre-effective date taxable year, that deficit must be carried forward to the first taxable year of the foreign corporation beginning after December 31, 1986, or later if the special effective date of § 1.902–1(a)(13) applies. The deficit carried forward is included in and reduces post-1986 undistributed earnings. Foreign income taxes paid with respect to pre-effective date years are not carried forward.

Paragraph (b)(2) makes clear that if a corporation has a deficit in section 902

accumulated profits at the end of its last pre-effective date year, then absent an adjustment that restores earnings to a pre-effective date taxable year (for example, a refund of foreign taxes) the corporation will never be able to pay a dividend out of pre-effective date earnings and profits, and thus will not be able to claim a credit for taxes deemed paid under section 902 for any foreign income taxes remaining in pre-effective date years.

The regulations redesignate §§ 1.902–1 and 1.902–2 of the existing final regulations as §§ 1.902–3 and 1.902–4, respectively, and make conforming amendments to those regulations.

Special Analyses

It has been determined that this notice of proposed rulemaking is not a significant regulatory action as defined in EO 12866. Therefore, a regulatory assessment is not required. It also has been determined that section 553(b) of the Administrative Procedure Act (5 U.S.C. chapter 5) and the Regulatory Flexibility Act (5 U.S.C. chapter 6) do not apply to these regulations, and, therefore, a Regulatory Flexibility Analysis is not required. Pursuant to section 7805(f) of the Internal Revenue Code, this notice of proposed rulemaking will be submitted to the Chief Counsel for Advocacy of the Small Business Administration for comment on its impact on small business.

Comments and Request for a Public Hearing

Before these proposed regulations are adopted as final regulations, consideration will be given to any written comments that are submitted timely (preferably a signed original and eight (8) copies) to the IRS. All comments will be available for public inspection and copying. A public hearing may be scheduled if requested in writing by a person that timely submits written comments. If a public hearing is scheduled, notice of the date, time, and place for the hearing will be published in the **Federal Register**.

Drafting Information

The principal author of these proposed regulations is Caren Silver Shein of the Office of Associate Chief Counsel (International), within the Office of Chief Counsel, IRS. However, other personnel from the IRS and Treasury Department participated in their development.

List of Subjects in 26 CFR Part 1

Income taxes, Reporting and recordkeeping requirements.

Proposed Amendments to the Regulations

Accordingly, 26 CFR part 1 is proposed to be amended as follows:

PART 1—INCOME TAXES

Paragraph 1. The authority citation for part 1 is amended by adding entries in numerical order to read as follows:

Authority: 26 U.S.C. 7805 * * * Section 1.902–1 also issued under 26 U.S.C. 902(c)(7). Section 1.902–2 also issued under 26 U.S.C. 902(c)(7). * * *

§§ 1.902–1 and 1.902–2 [Redesignated §§ 1.902–3 and 1.902–4]

Par. 2. Sections 1.902–1 and 1.902–2 are redesignated §§ 1.902–3 and 1.902–4, respectively.

Par. 3. Sections 1.902–0, 1.902–1 and 1.902–2 are added to read as follows:

§ 1.902–0 Outline of regulations provisions for section 902.

This section lists the provisions under section 902.

§ 1.902–1 Credit for domestic corporate shareholder of a foreign corporation for foreign income taxes paid by the foreign corporation.

(a) Definitions and special effective date.
(1) Domestic shareholder.
(2) First-tier corporation.
(3) Second-tier corporation.
(4) Third-tier corporation.
(5) Example.
(6) Upper- and lower-tier corporations.
(7) Foreign income taxes.
(8) Post-1986 foreign income taxes.
(i) In general.
(ii) Distributions out of earnings and profits accumulated by a lower-tier corporation in its taxable years beginning before January 1, 1987, and included in the gross income of an upper-tier corporation in its taxable year beginning after December 31, 1986.
(iii) Foreign income taxes paid or accrued with respect to high withholding tax interest.
(9) Post-1986 undistributed earnings.
(i) In general.
(ii) Distributions out of earnings and profits accumulated by a lower-tier corporation in its taxable years beginning before January 1, 1987, and included in the gross income of an upper-tier corporation in its taxable year beginning after December 31, 1986.
(iii) Reduction for foreign income taxes paid or accrued.
(iv) Special allocations.
(10) Pre-1987 accumulated profits.
(i) Definition.
(ii) Computation of pre-1987 accumulated profits.
(iii) Foreign income taxes attributable to pre-1987 accumulated profits.
(11) Dividend.
(12) Dividend received.
(13) Special effective date.
(i) Rule.
(ii) Example.
(b) Computation of foreign income taxes deemed paid by a domestic shareholder, first-tier corporation, and second- tier corporation.
(1) General rule.
(2) Allocation rule for dividends attributable to post-1986 undistributed earnings and pre-1987 accumulated profits.
(i) Portion of dividend out of post-1986 undistributed earnings.
(ii) Portion of dividend out of pre-1987 accumulated profits.
(3) Dividends paid out of pre-1987 accumulated profits.
(4) Deficits in accumulated earnings and profits.
(5) Examples.
(c) Special rules.
(1) Separate computations required for dividends from each first-tier and lower-tier corporation.
(i) Rule.
(ii) Example.
(2) Section 78 gross-up.
(i) Foreign income taxes deemed paid by a domestic shareholder.
(ii) Foreign income taxes deemed paid by an upper-tier corporation.
(iii) Example.
(3) Creditable foreign income taxes.
(4) Foreign mineral income.
(5) Foreign taxes paid or accrued in connection with the purchase or sale of certain oil and gas.
(6) Foreign oil and gas extraction income.
(7) United States shareholders of controlled foreign corporations.
(8) Credit for foreign taxes deemed paid in a section 304 transaction.
(9) Effect of section 482 adjustments on post-1986 foreign income taxes and post-1986 undistributed earnings.
(d) Dividends from controlled foreign corporations.
(1) General rule.
(2) Look-through.
(i) Dividends.
(ii) Coordination with section 960.
(3) Special rules.
(i) Dividends distributed out of earnings accumulated before a controlled foreign corporation became a controlled foreign corporation.
(ii) Dividend distributions out of earnings and profits for a year during which a shareholder that is currently a more-than-90-percent United States shareholder of a controlled foreign corporation was not a United States shareholder of the controlled foreign corporation.
(iii) Intra-group acquisitions.
(iv) Ordering rule.
(v) Examples.
(e) Information to be furnished.
(f) Examples.
(g) Effective date.

§ 1.902–2 Treatment of deficits in post-1986 undistributed earnings and pre-1987 accumulated profits of a first-, second-, or third-tier corporation for purposes of computing an amount of foreign taxes deemed paid § 1.902–1.

(a) Carryback of deficits in post-1986 undistributed earnings of a first-, second-, or third-tier corporation to pre-effective date taxable years.
(1) Rule.
(2) Examples.
(b) Carryforward of deficits in pre-1987 accumulated profits of a first-, second-, or third-tier corporation to post-1986 undistributed earnings for purposes of section 902.
(1) General rule.
(2) Effect of pre-effective date deficit.
(3) Examples.

§ 1.902–3 Credit for domestic corporate shareholder of a foreign corporation for foreign income taxes paid with respect to accumulated profits of taxable years of the foreign corporation beginning before January 1, 1987.

(a) Definitions.
(1) Domestic shareholder.
(2) First-tier corporation.
(3) Second-tier corporation.
(4) Third-tier corporation.
(5) Foreign income taxes.
(6) Dividend.
(7) Dividend received.
(b) Domestic shareholder owning stock in a first-tier corporation.
(1) In general.
(2) Amount of foreign taxes deemed paid by a domestic shareholder.
(c) First-tier corporation owning stock in a second-tier corporation.
(1) In general.
(2) Amount of foreign taxes deemed paid by a first-tier corporation.
(d) Second-tier corporation owning stock in a third-tier corporation.
(1) In general.
(2) Amount of foreign taxes deemed paid by a second-tier corporation.
(e) Determination of accumulated profits of a foreign corporation.
(f) Taxes paid on or with respect to accumulated profits of a foreign corporation.
(g) Determination of earnings and profits of a foreign corporation.
(1) Taxable year to which section 963 does not apply.
(2) Taxable year to which section 963 applies.
(3) Time and manner of making choice.
(4) Determination by district director.
(h) Source of income from first-tier corporation and country to which tax is deemed paid.
(1) Source of income.
(2) Country to which taxes deemed paid.
(i) United Kingdom income taxes paid with respect to royalties.
(j) Information to be furnished.
(k) Illustrations.
(l) Effective date.

§ 1.902–4 Rules for distributions attributable to accumulated profits for taxable years in which a first-tier corporation was a less developed country corporation.

(a) In general.
(b) Combined distributions.
(c) Distributions of a first-tier corporation attributable to certain distributions from second- or third-tier corporations.
(d) Illustrations.

§ 1.902–1 Credit for domestic corporate shareholder of a foreign corporation for foreign income taxes paid by the foreign corporation.

(a) *Definitions and special effective date.* For purposes of section 902 and §§ 1.902–1 and 1.902–2, the definitions provided in paragraphs (a) (1) through (12) of this section and the special effective date of paragraph (a)(13) of this section apply.

(1) *Domestic shareholder.* In the case of dividends received by a domestic corporation from a foreign corporation after December 31, 1986, the term domestic shareholder means a domestic corporation, other than an S corporation as defined in section 1361(a), that owns directly at least 10 percent of the voting stock of the foreign corporation at the time the domestic corporation receives a dividend from that foreign corporation.

(2) *First-tier corporation.* In the case of dividends received by a domestic shareholder from a foreign corporation in a taxable year beginning after December 31, 1986, the term first-tier corporation means a foreign corporation, at least 10 percent of the voting stock of which is owned by a domestic shareholder at the time the domestic shareholder receives a dividend from that foreign corporation. The term first-tier corporation also means a DISC or former DISC, but only with respect to dividends from the DISC or former DISC that are treated under sections 861(a)(2)(D) and 862(a)(2) as income from sources without the United States.

(3) *Second-tier corporation.* In the case of dividends paid to a first-tier corporation by a foreign corporation in a taxable year beginning after December 31, 1986, the foreign corporation is a second-tier corporation if, at the time a first-tier corporation receives a dividend from that foreign corporation, the first-tier corporation owns at least 10 percent of the foreign corporation's voting stock and the product of the following equals at least 5 percent—

(i) The percentage of voting stock owned by the domestic shareholder in the first-tier corporation; multiplied by

(ii) The percentage of voting stock owned by the first-tier corporation in the second-tier corporation.

(4) *Third-tier corporation.* In the case of dividends paid to a second-tier corporation by a foreign corporation in a taxable year beginning after December 31, 1986, a foreign corporation is a third-tier corporation if, at the time a second-tier corporation receives a dividend from that foreign corporation, the second-tier corporation owns at least 10 percent of the foreign corporation's voting stock and the product of the following equals at least 5 percent—

(i) The percentage of voting stock owned by the domestic shareholder in the first-tier corporation; multiplied by

(ii) The percentage of voting stock owned by the first-tier corporation in the second-tier corporation; multiplied by

(iii) The percentage of voting stock owned by the second-tier corporation in the third-tier corporation.

(5) *Example.* The following example illustrates the ownership requirements of paragraphs (a)(1) through (4) of this section.

Example. (i) Domestic corporation M owns 30 percent of the voting stock of foreign corporation A on January 1, 1991, and for all periods thereafter. Corporation A owns 40 percent of the voting stock of foreign corporation B on January 1, 1991, and continues to own that stock until June 1, 1991, when Corporation A sells its stock in Corporation B. Both Corporation A and Corporation B use the calendar year as the taxable year. Corporation B pays a dividend out of its post-1986 undistributed earnings to Corporation A, which Corporation A receives on February 16, 1991. Corporation A pays a dividend out of its post-1986 undistributed earnings to Corporation M, which Corporation M receives on January 20, 1992. Corporation M uses a fiscal year ending on June 30 as the taxable year.

(ii) On February 16, 1991, when Corporation B pays a dividend to Corporation A, Corporation M satisfies the 10- percent stock ownership requirement of paragraphs (a)(1) and (a)(2) of this section with respect to Corporation A. Therefore, Corporation A is a first-tier corporation within the meaning of paragraph (a)(2) of this section and Corporation M is a domestic shareholder of Corporation A within the meaning of paragraph (a)(1) of this section. Also on February 16, 1991, Corporation B is a second-tier corporation within the meaning of paragraph (a)(3) of this section because Corporation A owns at least 10 percent of its voting stock, and the percentage of voting stock owned by Corporation M in Corporation A on February 16, 1991 (30 percent) multiplied by the percentage of voting stock owned by Corporation A in Corporation B on February 16, 1991 (40 percent) equals 12 percent. Corporation A shall be deemed to have paid foreign income taxes of Corporation B with respect to the

dividend received from Corporation B on February 16, 1991.

(iii) On January 20, 1992, Corporation M satisfies the 10-percent stock ownership requirement of paragraphs (a)(1) and (2) of this section with respect to Corporation A. Therefore, Corporation A is a first-tier corporation within the meaning of paragraph (a)(2) of this section and Corporation M is a domestic shareholder within the meaning of paragraph (a)(1) of this section. Accordingly, for its taxable year ending on June 30, 1992, Corporation M is deemed to have paid a portion of the post-1986 foreign income taxes paid, accrued, or deemed to be paid, by Corporation A. Those taxes will include taxes paid by Corporation B that were deemed paid by Corporation A with respect to the dividend paid by Corporation B to Corporation A on February 16, 1991, even though Corporation B is no longer a second-tier corporation with respect to Corporations A and M on January 20, 1992, and has not been a second-tier corporation with respect to Corporations A and M at any time during the taxable years of Corporations A and M that include January 20, 1992.

(6) *Upper- and lower-tier corporations.* In the case of a third-tier corporation, the term upper-tier corporation means a first- or second-tier corporation. In the case of a second-tier corporation, the term upper-tier corporation means a first-tier corporation. In the case of a first-tier corporation, the term lower-tier corporation means a second- or third-tier corporation. In the case of a second-tier corporation, the term lower-tier corporation means a third- tier corporation.

(7) *Foreign income taxes.* The term foreign income taxes means income, war profits, and excess profits taxes as defined in § 1.901–2(a), and taxes included in the term income, war profits, and excess profits taxes by reason of section 903, that are imposed by a foreign country or a possession of the United States, including any such taxes deemed paid by a foreign corporation under this section. Foreign income, war profits, and excess profits taxes shall not include amounts excluded from the definition of those taxes pursuant to section 901 and the regulations under that section. See also paragraphs (c) (4) and (5) of this section (concerning foreign taxes paid with respect to foreign mineral income and in connection with the purchase or sale of oil and gas).

(8) *Post-1986 foreign income taxes*—(i) *In general.* Except as provided in paragraphs (a)(10) and (13) of this section, the term post-1986 foreign income taxes of a foreign corporation means the sum of the foreign income taxes paid, accrued, or deemed paid in the taxable year of the foreign corporation in which it distributes a dividend, and the foreign income taxes paid, accrued, or deemed paid in the foreign corporation's prior taxable years beginning after December 31, 1986, to the extent the foreign taxes were not paid or deemed paid by the foreign corporation on or with respect to earnings that in prior taxable years were distributed to or otherwise included in the income of a foreign or domestic shareholder, for example under sections 304, 367(b), 551, 951(a), 1248, or 1293 (whether or not the shareholder is deemed to have paid the foreign taxes). Thus, if a dividend is paid by a foreign corporation to a United States person that is not a domestic shareholder, or to a foreign person that is not a first- or second-tier corporation, then although no foreign income taxes shall be deemed paid under section 902 with respect to that dividend, foreign income taxes that would have been deemed paid had section 902 applied shall be removed from post-1986 foreign income taxes. In the case of a foreign corporation the foreign income taxes of which are determined based on an accounting period of less than one year, the term year means that accounting period. See sections 441(b)(3) and 443.

(ii) *Distributions out of earnings and profits accumulated by a lower-tier corporation in its taxable years beginning before January 1, 1987, and included in the gross income of an upper-tier corporation in its taxable year beginning after December 31, 1986.* Post-1986 foreign income taxes shall include foreign income taxes that are deemed paid by an upper-tier corporation with respect to distributions from a lower-tier corporation out of non-previously taxed pre-1987 accumulated profits, as defined in paragraph (a)(10) of this section, that are received by an upper-tier corporation in any taxable year of the upper-tier corporation beginning after December 31, 1986, provided the upper-tier corporation's earnings and profits in that year are included in its post-1986 undistributed earnings under paragraph (a)(9) of the section. Foreign income taxes deemed paid with respect to a distribution of pre-1987 accumulated profits shall be translated from the functional currency of the lower-tier corporation into dollars at the spot exchange rate in effect on the date of the distribution. To determine the character of the earnings and profits and associated taxes for foreign tax credit limitation purposes, see section 904 and § 1.904–7(a).

(iii) *Foreign income taxes paid or accrued with respect to high withholding tax interest.* Post-1986 foreign income taxes shall not include foreign income taxes paid or accrued by a noncontrolled section 902 corporation (as defined in section 904(d)(2)(E)(i)) with respect to high withholding tax interest (as defined in section 904(d)(2)(B)) to the extent the foreign tax rate imposed on such interest exceeds 5 percent. See section 904(d)(2)(E)(ii) and § 1.904–4(g)(2)(iii). The reduction in foreign income taxes paid or accrued by the amount of tax in excess of 5 percent imposed on high withholding tax interest income must be computed in functional currency before foreign income taxes are translated into U.S. dollars and included in post-1986 foreign income taxes.

(9) *Post-1986 undistributed earnings*—(i) *In general.* Except as provided in paragraphs (a) (10) and (13) of this section, the term post-1986 undistributed earnings means the amount of the earnings and profits of a foreign corporation (computed in accordance with sections 964(a) and 986) accumulated in taxable years of the foreign corporation beginning after December 31, 1986, determined as of the close of the taxable year of the foreign corporation in which it distributes a dividend. Post-1986 undistributed earnings shall not be reduced by reason of any earnings distributed or otherwise included in income, for example, under section 304, 367(b), 551, 951(a), 1248, or 1293, during the taxable year. Post-1986 undistributed earnings shall be reduced by the amount of earnings distributed or amounts otherwise included in income in prior taxable years beginning after December 31, 1986 (whether or not the shareholder is deemed to have paid any foreign taxes). For rules on carrybacks and carryforwards of deficits and their effect on post-1986 undistributed earnings, see § 1.902–2. In the case of a foreign corporation the foreign income taxes of which are computed based on an accounting period of less than one year, the term year means that accounting period. See sections 441(b)(3) and 443.

(ii) *Distributions out of earnings and profits accumulated by a lower-tier corporation in its taxable years beginning before January 1, 1987, and included in the gross income of an upper-tier corporation in its taxable year beginning after December 31, 1986.* Distributions by a lower-tier corporation out of non-previously taxed pre-1987 accumulated profits, as defined in paragraph (a)(10) of this section, that are received by an upper-tier corporation in any taxable year of the upper-tier corporation beginning after December 31, 1986, shall be treated as post-1986 undistributed earnings of the upper-tier corporation, provided the upper-tier corporation's earnings and profits for

that year are included in its post-1986 undistributed earnings under paragraph (a)(9)(i) of this section. To determine the character of the earnings and profits and associated taxes for foreign tax credit limitation purposes, see section 904 and § 1.904–7(a).

(iii) *Reduction for foreign income taxes paid or accrued.* In computing post-1986 undistributed earnings, earnings and profits shall be reduced by foreign income taxes paid or accrued regardless of whether the taxes are creditable. Thus, earnings and profits shall be reduced by foreign income taxes paid with respect to high withholding tax interest even though a portion of the taxes is not creditable pursuant to section 904(d)(2)(E)(ii) and is not included in post-1986 foreign income taxes under paragraph (a)(7)(iii) of this section. Earnings and profits of an upper-tier corporation, however, shall not be reduced by foreign income taxes paid by a lower-tier corporation and deemed to have been paid by the upper-tier corporation.

(iv) *Special allocations.* Post-1986 undistributed earnings is the total amount of the earnings of the corporation determined at the corporate level. Special allocations of earnings and taxes to particular shareholders, whether required or permitted by foreign law or a shareholder agreement, shall be disregarded. If, however, there is an agreement to pay dividends only out of earnings in the separate categories for passive or high withholding tax interest income, then only taxes imposed on passive or high withholding tax interest earnings shall be treated as related to the dividend. See § 1.904–6(a)(2).

(10) *Pre-1987 accumulated profits*—(i) *Definition.* The term pre-1987 accumulated profits means the amount of the earnings and profits of a foreign corporation computed in accordance with section 902 and attributable to its taxable years beginning before January 1, 1987. If the special effective date of paragraph (a)(13) of this section applies, pre-1987 accumulated profits also includes any earnings and profits (computed in accordance with sections 964(a) and 986) attributable to the foreign corporation's taxable years beginning after December 31, 1986, but before the first day of the first taxable year of the foreign corporation in which the ownership requirements of section 902(c)(3)(B) and paragraphs (a) (1) through (4) of this section are met with respect to that corporation.

(ii) *Computation of pre-1987 accumulated profits.* Pre-1987 accumulated profits must be computed under United States principles governing the computation of earnings and profits. Pre-1987 accumulated profits are determined at the corporate level. Special allocations of accumulated profits and taxes to particular shareholders with respect to distributions of pre-1987 accumulated profits in taxable years beginning after December 31, 1986, whether required or permitted by foreign law or a shareholder agreement, shall be disregarded. Pre-1987 accumulated profits of a particular year shall be reduced by amounts distributed from those accumulated profits or otherwise included in income from those accumulated profits, for example, under sections 304, 367(b), 551, 951(a), 1248, or 1293. If a deficit in post-1986 undistributed earnings is carried back to offset pre-1987 accumulated profits, pre-1987 accumulated profits of a particular taxable year shall be reduced by the amount of the deficit carried back to that year. See § 1.902–2. The amount of a distribution out of pre-1987 accumulated profits, and the amount of foreign income taxes deemed paid under section 902, shall be determined and translated into United States dollars by applying the law as in effect prior to the effective date of the Tax Reform Act of 1986. See §§ 1.902–3, 1.902–4, and 1.964–1.

(iii) *Foreign income taxes attributable to pre-1987 accumulated profits.* The term pre-1987 foreign income taxes means any foreign income taxes paid, accrued or deemed paid on or with respect to pre-1987 accumulated profits. Pre-1987 foreign income taxes of a particular year shall be reduced by the amount of taxes paid or deemed paid on or with respect to a distribution or inclusion out of pre-1987 accumulated profits of that year, and by the amount of taxes that would have been deemed paid had section 902 applied to a distribution or inclusion with respect to a person not eligible for a section 902 credit. Foreign income taxes deemed paid with respect to a distribution of pre-1987 accumulated profits shall be translated from the functional currency of the distributing corporation into United States dollars at the spot exchange rate in effect on the date of the distribution.

(11) *Dividend.* For purposes of section 902, the definition of the term dividend in section 316 and the regulations under that section applies. The term dividend also includes deemed dividends under sections 304, 367(b), 551, and 1248, but not deemed inclusions under sections 951(a) and 1293.

(12) *Dividend received.* A dividend shall be considered received for purposes of section 902 when the cash or other property is unqualifiedly made subject to the demands of the distributee. See § 1.301–1(b). A dividend also is considered received for purposes of section 902 when it is deemed received under section 304, 367(b), 551, or 1248.

(13) *Special effective date*—(i) *Rule.* If the first day on which the ownership requirements of section 902(c)(3)(B) and paragraphs (a)(1) through (4) of this section are met with respect to a foreign corporation, without regard to whether a dividend is distributed, is in a taxable year of the foreign corporation beginning after December 31, 1986, then—

(A) The post-1986 undistributed earnings and post-1986 foreign income taxes of the foreign corporation shall be determined by taking into account only taxable years beginning on and after the first day of the first taxable year of the foreign corporation in which the ownership requirements are met, including subsequent taxable years in which the ownership requirements of section 902(c)(3)(B) and paragraphs (a)(1) through (4) of this section are not met; and

(B) Earnings and profits accumulated prior to the first day of the first taxable year of the foreign corporation in which the ownership requirements of section 902(c)(3)(B) and paragraphs (a)(1) through (4) of this section are met shall be considered pre-1987 accumulated profits.

(ii) *Example.* The following example illustrates the special effective date rules of this paragraph (a)(13):

Example. As of December 31, 1991, and since its incorporation, foreign corporation A has owned 100 percent of the stock of foreign corporation B. Corporation B is not a controlled foreign corporation. Corporation B uses the calendar year as its taxable year, and its functional currency is the u. Assume 1u equals $1 at all relevant times. On April 1, 1992, Corporation B pays a 200u dividend to Corporation A and the ownership requirements of section 902(c)(3)(B) and paragraphs (a)(1) through (4) of this section are not met at that time. On July 1, 1992, domestic corporation M purchases 10 percent of the Corporation B stock from Corporation A and, for the first time, Corporation B meets the ownership requirements of section 902(c)(3)(B) and paragraph (a)(2) of this section. Corporation M uses the calendar year as its taxable year. Corporation B does not distribute any dividends to Corporation M during 1992. For its taxable year ending December 31, 1992, Corporation B has 500u of earnings and profits (after foreign taxes but before taking into account the 200u distribution to Corporation A) and pays 100u of foreign income taxes that is equal to $100. Pursuant to paragraph (a)(13)(i) of this section, Corporation B's post-1986 undistributed earnings and post-1986 foreign

income taxes will include earnings and profits and foreign income taxes attributable to Corporation B's entire 1992 taxable year and all taxable years thereafter. Thus, the April 1, 1992, dividend to Corporation A will reduce post-1986 undistributed earnings to 300u (500u–200u) under paragraph (a)(9)(i) of this section. The foreign income taxes attributable to the amount distributed as a dividend to Corporation A will not be creditable because Corporation A is not a domestic shareholder. Post-1986 foreign income taxes, however, will be reduced by the amount of foreign taxes attributable to the dividend. Thus, as of the beginning of 1993, Corporation B has $60 ($100 − [$100 x 40% (200u/500u)]) of post-1986 foreign income taxes. See paragraphs (a)(8)(i) and (b)(1) of this section.

(b) *Computation of foreign income taxes deemed paid by a domestic shareholder, first-tier corporation, and second-tier corporation*—(1) *General rule.* If a foreign corporation pays a dividend in any taxable year out of post-1986 undistributed earnings to a shareholder that is a domestic shareholder or an upper-tier corporation at the time it receives the dividend, the recipient shall be deemed to have paid the same proportion of any post-1986 foreign income taxes paid, accrued or deemed paid by the distributing corporation on or with respect to post-1986 undistributed earnings which the amount of the dividend out of post-1986 undistributed earnings (determined without regard to the gross-up under section 78) bears to the amount of the distributing corporation's post-1986 undistributed earnings. An upper-tier corporation shall not be entitled to compute an amount of foreign taxes deemed paid on a dividend from a lower-tier corporation, however, unless the ownership requirements of paragraphs (a)(1) through (4) of this section are met at each tier at the time the upper-tier corporation receives the dividend. Foreign income taxes deemed paid by a domestic shareholder or an upper-tier corporation must be computed under the following formula:

(2) *Allocation rule for dividends attributable to post-1986 undistributed earnings and pre-1987 accumulated profits*—(i) *Portion of dividend out of post-1986 undistributed earnings.* Dividends will be deemed to be paid first out of post-1986 undistributed earnings to the extent thereof. If dividends exceed post-1986 undistributed earnings and dividends are paid to more than one shareholder, then the dividend to each shareholder shall be deemed to be paid pro rata out of post-1986 undistributed earnings, computed as follows:

$$\text{Foreign income taxes deemed paid by domestic shareholder (or upper-tier corporation)} = \frac{\text{Post-1986 foreign income taxes of first-tier corporation (or lower-tier corporation)} \times \text{Dividend paid to domestic shareholder (or upper-tier corporation) by first-tier corporation (or lower-tier corporation)}}{\text{Post-1986 undistributed earnings of first-tier corporation (or lower-tier corporation)}}$$

(ii) *Portion of dividend out of pre-1987 accumulated profits.* After the portion of the dividend attributable to post-1986 undistributed earnings is determined under paragraph (b)(2)(i) of this section, the remainder of the dividend received by a shareholder is attributable to pre-1987 accumulated profits to the extent thereof. That part of the dividend attributable to pre-1987 accumulated profits will be treated as paid first from the most recently accumulated earnings and profits. See § 1.902–3. If dividends paid out of pre-1987 accumulated profits are attributable to more than one pre-1987 taxable year and are paid to more than one shareholder, then the dividend to each shareholder attributable to earnings and profits accumulated in a particular pre-1987 taxable year shall be deemed to be paid pro rata out of accumulated profits of that taxable year, computed as follows:

$$\text{Portion of Dividend to a Shareholder Attributable to Post-1986 Undistributed Earnings} = \frac{\text{Post-1986 Undistributed Earnings} \times \text{Dividend to Shareholder}}{\text{Total Dividends Paid To all Shareholders}}$$

$$\text{Portion of Dividend to a Shareholder Attributable to Accumulated Profits of a Particular Pre-1987 Taxable Year} = \frac{\text{Dividend Paid Out of Pre-1987 Accumulated Profits with Respect to the Particular Pre-1987 Taxable Year} \times \text{Dividend to Shareholder}}{\text{Total Dividends Paid to all Shareholders}}$$

(3) *Dividends paid out of pre-1987 accumulated profits.* If dividends are paid by a first-tier corporation or a lower-tier corporation out of pre-1987 accumulated profits, the domestic shareholder or upper-tier corporation that receives the dividends shall be deemed to have paid foreign income taxes to the extent provided under section 902 and the regulations thereunder as in effect prior to the effective date of the Tax Reform Act of 1986. See paragraphs (a)(10) and (13) of this section and §§ 1.902–3 and 1.902–4.

(4) *Deficits in accumulated earnings and profits.* No foreign income taxes shall be deemed paid with respect to a distribution from a foreign corporation out of current earnings and profits that is treated as a dividend under section 316(a)(2) if, as of the end of the taxable year in which the dividend is paid or accrued, the corporation has zero or a deficit in post-1986 undistributed earnings and the sum of current plus accumulated earnings and profits is zero or less than zero. The dividend shall reduce post-1986 undistributed earnings and accumulated earnings and profits.

(5) *Examples.* The following examples illustrate the rules of this paragraph (b).

Example 1. Domestic corporation M owns 100 percent of foreign corporation A. Both Corporation M and Corporation A use the calendar year as the taxable year, and Corporation A uses the u as its functional currency. Assume that 1u equals $1 at all relevant times. All of Corporation A's pre-1987 accumulated profits and post-1986 undistributed earnings are non-subpart F general limitation earnings and profits under section 904(d)(1)(I). As of December 31, 1992, Corporation A has 100u of post-1986 undistributed earnings and $40 of post-1986 foreign income taxes. For its 1986 taxable year, Corporation A has accumulated profits

of 200u (net of foreign taxes) and paid 60u of foreign income taxes on those earnings. In 1992, Corporation A distributes 150u to Corporation M. Corporation A has 100u of post-1986 undistributed earnings and the dividend, therefore, is treated as paid out of post-1986 undistributed earnings to the extent of 100u. The first 100u distribution is from post-1986 undistributed earnings, and, because the distribution exhausts those earnings, Corporation M is deemed to have paid the entire amount of post-1986 foreign income taxes of Corporation A ($40). The remaining 50u dividend is treated as a dividend out of 1986 accumulated profits under paragraph (b)(2) of this section. Corporation M is deemed to have paid $15 (60u×50u/200u, translated at the appropriate exchange rates) of Corporation A's foreign income taxes for 1986. As of January 1, 1993, Corporation A's post-1986 undistributed earnings and post-1986 foreign income taxes are 0. Corporation A has 150u of accumulated profits and 45u of foreign income taxes remaining in 1986.

Example 2. Domestic corporation M (incorporated on January 1, 1987) owns 100 percent of foreign corporation A (incorporated on January 1, 1987). Both Corporation M and Corporation A use the calendar year as the taxable year, and Corporation A uses the u as its functional currency. Assume that 1u equals $1 at all relevant times. Corporation A has no pre-1987 accumulated profits. All of Corporation A's post-1986 undistributed earnings are non-subpart F general limitation earnings and profits under section 904(d)(1)(I). On January 1, 1992, Corporation A has a deficit in accumulated earnings and profits and a deficit in post-1986 undistributed earnings of (200u). No foreign taxes have been paid with respect to post-1986 undistributed earnings. During 1992, Corporation A earns 100u (net of foreign taxes), pays $40 of foreign taxes on those earnings and distributes 50u to Corporation M. As of the end of 1992, Corporation A has a deficit of (100u) ((200u) post-1986 undistributed earnings + 100u current earnings and profits) in post-1986 undistributed earnings. Corporation A, however, has current earnings and profits of 100u. Therefore, the 50u distribution is treated as a dividend in its entirety under section 316(a)(2). Under paragraph (b)(4) of this section, Corporation M is not deemed to have paid any of the foreign taxes paid by Corporation A because post-1986 undistributed earnings and the sum of current plus accumulated earnings and profits are (100u). The dividend reduces both post-1986 undistributed earnings and accumulated earnings and profits. Therefore, as of January 1, 1993, Corporation A's post-1986 undistributed earnings are (150u) and its accumulated earnings and profits are (150u). Corporation A's post-1986 foreign income taxes at the start of 1993 are $40.

(c) *Special rules*—(1) *Separate computations required for dividends from each first-tier and lower-tier corporation*—(i) *Rule.* If in a taxable year dividends are received by a domestic shareholder or an upper-tier corporation from two or more first-tier corporations or two or more lower-tier corporations, the foreign income taxes deemed paid by the domestic shareholder or the upper-tier corporation under section 902 (a) and (b) and paragraph (b) of this section shall be computed separately with respect to the dividends received from each first-tier corporation or lower-tier corporation. If a domestic shareholder receives dividend distributions from one or more first-tier corporations and in the same taxable year the first-tier corporation receives dividends from one or more lower-tier corporations, then the amount of foreign income taxes deemed paid shall be computed by starting with the lowest-tier corporation and working upward.

(ii) *Example.* The following example illustrates the application of this paragraph (c)(1):

Example. P, a domestic corporation, owns 40 percent of the voting stock of foreign corporation S. S owns 30 percent of the voting stock of foreign corporation T, and 30 percent of the voting stock of foreign corporation U. Neither S, T, nor U is a controlled foreign corporation. P, S, T and U all use the calendar year as their taxable year. In 1993, T and U both pay dividends to S and S pays a dividend to P. To compute foreign taxes deemed paid, paragraph (c)(1) of this section requires P to start with the lowest tier corporations and to compute foreign taxes deemed paid separately for dividends from each first-tier and lower-tier corporation. Thus, S first will compute foreign taxes deemed paid separately on its dividends from T and U. The deemed paid taxes will be added to S's post-1986 foreign income taxes, and the dividends will be added to S's post-1986 undistributed earnings. Next, P will compute foreign taxes deemed paid with respect to the dividend from S. This computation will take into account the taxes paid by T and U and deemed paid by S.

(2) *Section 78 gross-up*—(i) *Foreign income taxes deemed paid by a domestic shareholder.* Except as provided in section 960(b) and the regulations under that section (relating to amounts excluded from gross income under section 959(b)), any foreign income taxes deemed paid by a domestic shareholder in any taxable year under section 902(a) and paragraph (b) of this section shall be included in the gross income of the domestic shareholder for the year as a dividend under section 78. Amounts included in gross income under section 78 shall, for purposes of section 904, be deemed to be derived from sources within the United States to the extent the earnings and profits on which the taxes were paid are treated under section 904(g) as United States source earnings and profits. Section 1.904–5(m)(6). Amounts included in gross income under section 78 shall be treated for purposes of section 904 as income in a separate category to the extent that the foreign income taxes were allocated and apportioned to income in that separate category. See section 904(d)(3)(G) and § 1.904–6(b)(3).

(ii) *Foreign income taxes deemed paid by an upper-tier corporation.* Foreign income taxes deemed paid by an upper-tier corporation on a distribution from a lower-tier corporation are not included in the earnings and profits of the upper-tier corporation. For purposes of section 904, foreign income taxes shall be allocated and apportioned to income in a separate category to the extent those taxes were allocated to the earnings and profits of the lower-tier corporation in that separate category. See section 904(d)(3)(G) and § 1.904–6(b)(3). To the extent that section 904(g) treats the earnings of the lower-tier corporation on which those foreign income taxes were paid as United States source earnings and profits, the foreign income taxes deemed paid by the upper-tier corporation on the distribution from the lower-tier corporation shall be treated as attributable to United States source earnings and profits. See section 904(g) and § 1.904–5(m)(6).

(iii) *Example.* The following example illustrates the rules of this paragraph (c)(2):

Example. P, a domestic corporation, owns 100 percent of the voting stock of controlled foreign corporation S. Corporations P and S use the calendar year as their taxable year, and S uses the u as its functional currency. Assume that 1u equals $1 at all relevant times. As of January 1, 1992, S has -0- post-1986 undistributed earnings and -0- post-1986 foreign income taxes. In 1992, S earns 150u of non-subpart F general limitation income net of foreign taxes and pays 60u of foreign income taxes. As of the end of 1992, but before dividend payments, S has 150u of post-1986 undistributed earnings and $60 of post-1986 foreign income taxes. Assume that 50u of S's earnings for 1992 are from United States sources. S pays P a dividend of 75u which P receives in 1992. Under § 1.904–5(m)(4), one-third of the dividend, or 25u (75u×50u/150u), is United States source income to P. P computes foreign taxes deemed paid on the dividend under paragraph (b)(1) of this section of $30 ($60×50%[75u/150u]) and includes that amount in gross income under section 78 as a dividend. Because 25u of the 75u dividend is United States source income to P, $10 ($30×33.33%[25u/75u]) of the section 78 dividend will be treated as United States source income to P under this paragraph (c)(2).

(3) *Creditable foreign income taxes.* The amount of creditable foreign income taxes under section 901 shall include, subject to the limitations and conditions of sections 902 and 904,

foreign income taxes actually paid and deemed paid by a domestic shareholder that receives a dividend from a first-tier corporation. Foreign income taxes deemed paid by a domestic shareholder under paragraph (b) of this section shall be deemed paid by the domestic shareholder only for purposes of computing the foreign tax credit allowed under section 901.

(4) *Foreign mineral income.* Certain foreign income, war profits and excess profits taxes paid or accrued with respect to foreign mineral income will not be considered foreign income taxes for purposes of section 902. See section 901(e) and § 1.901–3.

(5) *Foreign taxes paid or accrued in connection with the purchase or sale of certain oil and gas.* Certain income, war profits, or excess profits taxes paid or accrued to a foreign country in connection with the purchase and sale of oil or gas extracted in that country will not be considered foreign income taxes for purposes of section 902. See section 901(f).

(6) *Foreign oil and gas extraction income.* For rules relating to reduction of the amount of foreign income taxes deemed paid with respect to foreign oil and gas extraction income, see section 907(a) and the regulations under that section.

(7) *United States shareholders of controlled foreign corporations.* See paragraph (d) of this section and sections 960 and 962 and the regulations under those sections for special rules relating to the application of section 902 in computing foreign income taxes deemed paid by United States shareholders of controlled foreign corporations.

(8) *Credit for foreign taxes deemed paid in a section 304 transaction.* [Reserved].

(9) *Effect of section 482 adjustments on post-1986 foreign income taxes and post-1986 undistributed earnings.* For rules concerning the effect of a section 482 adjustment on post-1986 foreign income taxes and post-1986 undistributed earnings, see section 905(c) and the regulations under that section.

(d) *Dividends from controlled foreign corporations*—(1) *General rule.* Except as provided in paragraph (d)(3) of this section, if a dividend is received by a domestic shareholder that is a United States shareholder (as defined in section 951(b) or section 953(c)(1)(A)) from a first-tier corporation that is a controlled foreign corporation (as defined in section 957(a) or section 953(c)(1)(B)), or by an upper-tier corporation from a lower-tier corporation if the corporations are related look-through entities within the meaning of § 1.904–5(i), the following rule applies. If a dividend is paid out of post-1986 undistributed earnings or pre-1987 accumulated profits of the upper- or lower-tier controlled foreign corporation attributable to more than one separate category under section 904(d), the amount of foreign income taxes deemed paid by the domestic shareholder or the upper-tier corporation under section 902 and paragraph (b) of this section shall be computed separately with respect to the post-1986 undistributed earnings or pre-1987 accumulated profits in each separate category out of which the dividend is paid. See § 1.904–5(c)(4) and paragraph (d)(2) of this section. The separately computed deemed paid taxes shall be added to other taxes paid by the U.S. shareholder or upper-tier corporation with respect to income in the appropriate separate category.

(2) *Look-through*—(i) *Dividends.* Except as otherwise provided in paragraph (d)(3) of this section, any dividend distribution out of post-1986 undistributed earnings of a look-through entity to a related look-through entity shall be deemed to be paid pro rata out of each separate category of income. See § 1.904–5(c)(4) and § 1.904–7. The portion of the foreign income taxes attributable to a particular separate category that shall be deemed paid by the domestic shareholder or upper-tier corporation must be computed under the following formula:

Foreign taxes deemed paid by domestic shareholder or upper-tier corporation with respect to a separate category under section 904(d) = Post-1986 foreign income taxes of first-tier or lower-tier corporation allocated and apportioned to a separate category under § 1.904–6× Dividend amount attributable to a separate category Post-1986 undistributed earnings of first-tier or lower-tier corporation attributable to the separate category

(ii) *Coordination with section 960.* For purposes of coordinating the computation of foreign taxes deemed paid with respect to amounts included in gross income pursuant to section 951(a) and dividends distributed by a controlled foreign corporation, see section 960 and the regulations under that section.

(3) *Special rules*—(i) *Dividends distributed out of earnings accumulated before a controlled foreign corporation became a controlled foreign corporation.* Any dividend distributed by a controlled foreign corporation out of earnings accumulated before the controlled foreign corporation became a controlled foreign corporation shall be treated as a dividend from a noncontrolled section 902 corporation regardless of whether the earnings were accumulated in a taxable year beginning before January 1, 1987, or after December 31, 1986.

(ii) *Dividend distributions out of earnings and profits for a year during which a shareholder that is currently a more-than-90-percent United States shareholder of a controlled foreign corporation was not a United States shareholder of the controlled foreign corporation.* A dividend shall be treated as a dividend from a noncontrolled section 902 corporation, and the look-through rules of section 904(d)(3) and § 1.904–5 shall not apply if the following conditions are met—

(A) The dividend is distributed by a controlled foreign corporation attributable to earnings and profits of a taxable year during which it was a controlled foreign corporation;

(B) The distribution is received by an upper-tier controlled foreign corporation or a United States shareholder and at the time the upper-tier controlled foreign corporation or the United States shareholder receives the distribution, the United States shareholder owns directly or indirectly within the meaning of sections 958 and 318 and the regulations under those sections, more than 90 percent of the total combined voting power of all classes of stock entitled to vote of the distributing controlled foreign corporation; and

(C) The more than 90 percent United States shareholder was not a United States shareholder at the time the distributed earnings and profits were accumulated by the controlled foreign corporation (the pre-acquisition period).

(iii) *Intra-group acquisitions.* If, however, the dividend recipient is a member of an affiliated group within the meaning of section 1504(a) without regard to section 1504(b)(3) and acquired its interest in the controlled foreign corporation from a member or members of the affiliated group, and the previous owner or owners were entitled to look-through treatment on distributions from the controlled foreign corporation, then the dividend recipient also shall be entitled to look-through treatment on distributions out of pre-acquisition period earnings and profits.

(iv) *Ordering rule.* The determination whether a distribution from a controlled foreign corporation is attributable to earnings and profits accumulated before the corporation was a controlled foreign corporation or during the pre-acquisition period shall be made on a last-in first-out (LIFO) basis. Thus, for example, a distribution shall be deemed

made from the earnings and profits attributable to the period after the United States shareholder acquired more than 90 percent ownership in an existing controlled foreign corporation (post-acquisition earnings and profits) to the extent of those earnings, and then from the most recently accumulated pre-acquisition earnings and profits. Earnings and profits accumulated in the taxable year in which the corporation became a controlled foreign corporation or the United States shareholder acquired more than 90 percent ownership of the controlled foreign corporation shall be considered earnings and profits accumulated after the corporation became a controlled foreign corporation or the United States shareholder acquired more than 90 percent ownership.

(v) *Examples.* The following examples illustrate the application of this paragraph (d)(3):

Example 1. S is a foreign corporation formed in 1980. S had no domestic shareholders until 1992, when P, a domestic corporation, acquired 60 percent of the stock of S. For 1992 and subsequent years, S is a controlled foreign corporation. In 1992, S has no income and pays a dividend out of prior years' earnings and profits. Pursuant to paragraph (d)(3)(i) of this section, because S was not a controlled foreign corporation before 1992, the dividend to P will be treated as a dividend from a noncontrolled section 902 corporation. Further, because the 10-percent ownership requirement of paragraphs (a)(1) and (a)(2) of this section were not satisfied until 1992, the amount of foreign taxes deemed paid on any distribution out of earnings accumulated before P acquired S's stock will be computed under the rules of section 902 as in effect before the Tax Reform Act of 1986. See §§ 1.902–3 and 1.902–4 and paragraphs (a) (10) and (13) of this section.

Example 2. P, a domestic corporation, owns 100 percent of the stock of U, a controlled foreign corporation. In 1992, P sells 100 percent of the stock of U to T, an unrelated domestic corporation. U has no income in 1992 and pays a dividend to T out of post-1986 undistributed earnings attributable to prior years. T is not related to P and P's ownership of U will not be attributed to T. The dividend to T in 1992 thus will be treated as a dividend from a noncontrolled section 902 corporation. In 1993, U pays a dividend to T out of post-acquisition earnings and profits. T will be entitled to look-through treatment on the dividend. The amount of foreign taxes deemed paid on each distribution will be computed under the rules of this section.

Example 3. Since its organization in 1980, S, a controlled foreign corporation, has been owned 60 percent by domestic corporation P and 40 percent by domestic corporation R. In 1992, T acquires R's 40 percent interest in the stock of S. S has no income in 1992 and pays a dividend out of prior years' earnings and profits. Paragraph (d)(3)(ii) of this section does not apply because T, which formerly owned no stock in S, acquired only 40 percent of the stock of S. Thus, T is entitled to look-through treatment on the dividend payment out of post-1986 undistributed earnings accumulated in years prior to 1992.

(e) *Information to be furnished.* If the credit for foreign income taxes claimed under section 901 includes foreign income taxes deemed paid under section 902 and paragraph (b) of this section, the domestic shareholder must furnish the same information with respect to the foreign income taxes deemed paid as it is required to furnish with respect to the foreign income taxes it directly paid or accrued and for which the credit is claimed. See § 1.905–2. For other information required to be furnished by the domestic shareholder for the annual accounting period of certain foreign corporations ending with or within the shareholder's taxable year, and for reduction in the amount of foreign income taxes paid, accrued, or deemed paid for failure to furnish the required information, see section 6038 and the regulations under that section.

(f) *Examples.* The following examples illustrate the application of this § 1.902–1.

Example 1. Since 1987, domestic corporation M has owned 10 percent of the one class of stock of foreign corporation A. The remaining 90 percent of Corporation A's stock is owned by Z, a foreign corporation. Corporation A is not a controlled foreign corporation. Corporation A uses the u as its functional currency, and 1u equals $1 at all relevant times. Both Corporation A and Corporation M use the calendar year as the taxable year. In 1992, Corporation A pays a 30u dividend out of post-1986 undistributed earnings, 3u to Corporation M and 27u to Corporation Z. Corporation M is deemed, under paragraph (b) of this section, to have paid a portion of the post-1986 foreign income taxes paid by Corporation A and includes the amount of foreign taxes deemed paid in gross income under section 78 as a dividend. Both the foreign taxes deemed paid and the dividend would be subject to a separate limitation for dividends from Corporation A, a noncontrolled 902 corporation. Under paragraph (a)(9)(i) of this section, Corporation A must reduce its post-1986 undistributed earnings as of January 1, 1993, by the total amount of dividends paid to Corporation M and Corporation Z in 1992. Under paragraph (a)(8)(i) of this section, Corporation A must reduce its post-1986 foreign income taxes as of January 1, 1993, by the amount of foreign income taxes that were deemed paid by Corporation M and by the amount of foreign income taxes that would have been deemed paid by Corporation Z had section 902 applied to the dividend paid to Corporation Z. Foreign income taxes deemed paid by Corporation M and Corporation A's opening balances in post-1986 undistributed earnings and post-1986 foreign income taxes for 1993 are computed as follows:

1. Assumed post-1986 undistributed earnings of Corporation A at start of 1992	25u
2. Assumed post-1986 foreign income taxes of Corporation A at start of 1992	$25
3. Assumed pre-tax earnings and profits of Corporation A for 1992	50u
4. Assumed foreign income taxes paid or accrued by Corporation A in 1992	15u
5. Post-1986 undistributed earnings in Corporation A for 1992 (pre-dividend) (Line 1 plus Line 3 minus Line 4)	60u
6. Post-1986 foreign income taxes in Corporation A for 1992 (pre-dividend) (Line 2 plus Line 4 translated at the appropriate exchange rates).	$40
7. Dividends paid out of post-1986 undistributed earnings of Corporation A to Corporation M in 1992	3u
8. Percentage of Corporation A's post-1986 undistributed earnings paid to Corporation M (Line 7 divided by Line 5)	5%
9. Foreign income taxes of Corporation A deemed paid by Corporation M under section 902 (a) (Line 6 multiplied by Line 8)	$2
10. Total dividends paid out of post-1986 undistributed earnings of Corporation A to all shareholders in 1992	30u
11. Percentage of Corporation A's post-1986 undistributed earnings paid to all shareholders in 1992 (Line 10 divided by Line 5)	50%
12. Post-1986 foreign income taxes paid with respect to post-1986 undistributed earnings distributed to all shareholders in 1992 (Line 6 multiplied by Line 11).	$20
13. Corporation A's post-1986 undistributed earnings at the start of 1993 (Line 5 minus Line 10)	30u
14. Corporation A's post-1986 foreign income taxes at the start of 1993 (Line 6 minus Line 12)	$20

Example 2. (i) The facts are the same as in *Example 1,* except that Corporation M has also owned 10 percent of the one class of stock of foreign corporation B since 1987. Corporation B uses the calendar year as the taxable year. The remaining 90 percent of Corporation B's stock is owned by Corporation Z. Corporation B is not a controlled foreign corporation. Corporation B uses the u as its functional currency, and 1u equals $1 at all relevant times. In 1992, Corporation B has earnings and profits and pays foreign income taxes, a portion of which are attributable to high withholding tax interest, as defined in section 904(d)(2)(B)(i). Corporation B must reduce its pool of post-1986 foreign income taxes by the amount of tax imposed on high withholding tax interest

in excess of 5 percent because these taxes are not eligible for the deemed paid credit. See section 904(d)(2)(E)(ii) and paragraph (a)(8)(iii) of this section. Corporation B pays 50u in dividends in 1992, 5u to Corporation M and 45u to Corporation Z. Corporation M must compute its section 902(a) deemed paid credit separately for the dividends it receives in 1992 from Corporation A (as computed in *Example 1*) and from Corporation B. Foreign income taxes of Corporation B deemed paid by Corporation M, and Corporation B's opening balances in post-1986 undistributed earnings and post-1986 foreign income taxes for 1993 are computed as follows:

1. Assumed post-1986 undistributed earnings of Corporation B at start of 1992	(100u)
2. Assumed post-1986 foreign income taxes of Corporation B at start of 1992	$0
3. Assumed pre-tax earnings and profits of Corporation B for 1992 (including 50u of high withholding tax interest on which 5u of tax is withheld).	302.50u
4. Assumed foreign income taxes paid or accrued by Corporation B in 1992	102.50u
5. Post-1986 undistributed earnings in Corporation B for 1992 (pre-dividend) (Line 1 plus Line 3 minus Line 4)	100u
6. Amount of foreign income tax of Corporation B imposed on high withholding tax interest in excess of 5% (5u withholding tax—[5%×50u high withholding tax interest]).	2.50u
7. Post-1986 foreign income taxes in Corporation B for 1992 (pre-dividend) (Line 2 plus [Line 4 minus Line 6 translated at the appropriate exchange rate]).	$100
8. Dividends paid out of post-1986 undistributed earnings to Corporation M in 1992	5u
9. Percentage of Corporation B's post-1986 undistributed earnings paid to Corporation M (Line 8 divided by Line 5)	5%
10. Foreign income taxes of Corporation B deemed paid by Corporation M under section 902(a) (Line 7 multiplied by Line 9)	$5
11. Total dividends paid out of post-1986 undistributed earnings of Corporation B to all shareholders in 1992	50u
12. Percentage of Corporation B's post-1986 undistributed earnings paid to all shareholders in 1992 (Line 11 divided by Line 5)	50%
13. Post-1986 foreign income taxes of Corporation B paid on or with respect to post-1986 undistributed earnings distributed to all shareholders in 1992 (Line 7 multiplied by Line 12).	$50
14. Corporation B's post-1986 undistributed earnings at start of 1993 (Line 5 minus Line 11)	50u
15. Corporation B's post-1986 foreign income taxes at start of 1993 (Line 7 minus Line 13)	$50

(ii) For 1992, as computed in *Example 1,* Corporation M is deemed to have paid $2 of the post-1986 foreign income taxes paid by Corporation A and includes $2 in gross income as a deemed dividend under section 78. Both the income inclusion and the credit are subject to a separate limitation for dividends from Corporation A, a noncontrolled section 902 corporation. Corporation M also is deemed to have paid $5 of the post-1986 foreign income taxes paid by Corporation B and includes $5 in gross income as a deemed dividend under section 78. Both the income inclusion and the foreign taxes deemed paid are subject to a separate limitation for dividends from Corporation B, a noncontrolled section 902 corporation.

Example 3. (i) Since 1987, domestic corporation M has owned 50 percent of the one class of stock of foreign corporation A. The remaining 50 percent of Corporation A is owned by foreign corporation Z. For the same time period, Corporation A has owned 40 percent of the one class of stock of foreign corporation B, and Corporation B has owned 30 percent of the one class of stock of foreign corporation C. The remaining 60 percent of Corporation B is owned by foreign corporation Y, and the remaining 70 percent of Corporation C is owned by foreign corporation X. Corporations A, B, and C are not controlled foreign corporations. Corporations A, B, and C use the u as their functional currency, and 1u equals $1 at all relevant times. Corporation B uses a fiscal year ending June 30 as its taxable year; all other corporations use the calendar year as the taxable year. On February 1, 1992, Corporation C pays a 500u dividend out of post-1986 undistributed earnings, 150u to Corporation B and 350u to Corporation X. On February 15, 1992, Corporation B pays a 300u dividend out of post-1986 undistributed earnings computed as of the close of Corporation B's fiscal year ended June 30, 1992, 120u to Corporation A and 180u to Corporation Y. On August 15, 1992, Corporation A pays a 200u dividend out of post-1986 undistributed earnings, 100u to Corporation M and 100u to Corporation Z. In computing foreign taxes deemed paid by Corporations B and A, section 78 does not apply and Corporations B and A thus do not have to include the foreign taxes deemed paid in earnings and profits. See paragraph (c)(2)(ii) of this section. Foreign income taxes deemed paid by Corporations B, A and M, and the foreign corporations' opening balances in post-1986 undistributed earnings and post-1986 foreign income taxes for Corporation B's fiscal year beginning July 1, 1992, and Corporation C's and Corporation A's 1993 calendar years are computed as follows:

A. Corporation C (third-tier corporation):	
1. Assumed post-1986 undistributed earnings in Corporation C at start of 1992	1300u
2. Assumed post-1986 foreign income taxes in Corporation C at start of 1992	$500
3. Assumed pre-tax earnings and profits of Corporation C for 1992	500u
4. Assumed foreign income taxes paid or accrued in 1992	300u
5. Post-1986 undistributed earnings in Corporation C for 1992 (pre-dividend) (Line 1 plus Line 3 minus Line 4)	1500u
6. Post-1986 foreign income taxes in Corporation C for 1992 (pre-dividend) (Line 2 plus Line 4 translated at the appropriate exchange rates).	$800
7. Dividends paid out of post-1986 undistributed earnings of Corporation C to Corporation B in 1992	150u
8. Percentage of Corporation C's post-1986 undistributed earnings paid to Corporation B (Line 7 divided by Line 5)	10%
9. Foreign income taxes of Corporation C deemed paid by Corporation B under section 902(b)(2) (Line 6 multiplied by Line 8).	$80
10. Total dividends paid out of post-1986 undistributed earnings of Corporation C to all shareholders in 1992	500u
11. Percentage of Corporation C's post-1986 undistributed earnings paid to all shareholders in 1992 (Line 10 divided by Line 5).	33.33%
12. Post-1986 foreign income taxes paid with respect to post-1986 undistributed earnings distributed to all shareholders in 1992 (Line 6 multiplied by Line 11).	$266.66
13. Post-1986 undistributed earnings in Corporation C at start of 1993 (Line 5 minus Line 10)	1000u
14. Post-1986 foreign income taxes in Corporation C at start of 1993 (Line 6 minus Line 12)	$533.34
B. Corporation B (second-tier corporation):	
1. Assumed post-1986 undistributed earnings in Corporation B as of July 1, 1991	0
2. Assumed post-1986 foreign income taxes in Corporation B as of July 1, 1991	0
3. Assumed pre-tax earnings and profits of Corporation B for fiscal year ended June 30, 1992, (including 150u dividend from Corporation B).	1000u
4. Assumed foreign income taxes paid or accrued by Corporation B in fiscal year ended June 30, 1992	200u

5. Foreign income taxes of Corporation C deemed paid by Corporation B in its fiscal year ended June 30, 1992 (Part A, Line 9 of paragraph (i) of this Example 3).	$80
6. Post-1986 undistributed earnings in Corporation B for fiscal year ended June 30, 1992 (pre-dividend) (Line 1 plus Line 3 minus Line 4).	800u
7. Post-1986 foreign income taxes in Corporation B for fiscal year ended June 30, 1992 (pre-dividend) (Line 2 plus Line 4 translated at the appropriate exchange rates plus Line 5).	$280
8. Dividends paid out of post-1986 undistributed earnings of Corporation B to Corporation A on February 15, 1992	120u
9. Percentage of Corporation B's post-1986 undistributed earnings for fiscal year ended June 30, 1992, paid to Corporation A (Line 8 divided by Line 6).	15%
10. Foreign income taxes paid and deemed paid by Corporation B as of June 30, 1992, deemed paid by Corporation A under section 902(b)(1) (Line 7 multiplied by Line 9).	$42
11. Total dividends paid out of post-1986 undistributed earnings of Corporation B for fiscal year ended June 30, 1992	300u
12. Percentage of Corporation B's post-1986 undistributed earnings for fiscal year ended June 30, 1992, paid to all shareholders (Line 11 divided by Line 6).	37.5%
13. Post-1986 foreign income taxes paid and deemed paid with respect to post-1986 undistributed earnings distributed to all shareholders during Corporation B's fiscal year ended June 30, 1992 (Line 7 multiplied by Line 12).	$105
14. Post-1986 undistributed earnings in Corporation B as of July 1, 1992 (Line 6 minus Line 11)	500u
15. Post-1986 foreign income taxes in Corporation B as of July 1, 1992 (Line 7 minus Line 13)	$175
C. Corporation A (first-tier corporation):	
1. Assumed post-1986 undistributed earnings in Corporation A at start of 1992	250u
2. Assumed post-1986 foreign income taxes in Corporation A at start of 1992	$100
3. Assumed pre-tax earnings and profits of Corporation A for 1992 (including 120u dividend from Corporation B)	250u
4. Assumed foreign income taxes paid or accrued by Corporation A in 1992	100u
5. Foreign income taxes paid or deemed paid by Corporation B as of June 30, 1992, that are deemed paid by Corporation A in 1992 (Part B, Line 10 of paragraph (i) of this *Example 3).*	$42
6. Post-1986 undistributed earnings in Corporation A for 1992 (pre-dividend) (Line 1 plus Line 3 minus Line 4)	400u
7. Post-1986 foreign income taxes in Corporation A for 1992 (pre-dividend) (Line 2 plus Line 4 translated at the appropriate exchange rates plus Line 5).	$242
8. Dividends paid out of post-1986 undistributed earnings of Corporation A to Corporation M on August 15, 1992	100u
9. Percentage of Corporation A's post-1986 undistributed earnings paid to Corporation M in 1992 (Line 8 divided by Line 6).	25%
10. Foreign income taxes paid and deemed paid by Corporation A in 1992 that are deemed paid by Corporation M under section 902(a) (Line 7 multiplied by Line 9).	$60.50
11. Total dividends paid out of post-1986 undistributed earnings of Corporation A to all shareholders in 1992	200u
12. Percentage of Corporation A's post-1986 undistributed earnings paid to all shareholders in 1992 (Line 11 divided by Line 6).	50%
13. Post-1986 foreign income taxes paid and deemed paid by Corporation A with respect to post-1986 undistributed earnings distributed to all shareholders in 1992 (Line 7 multiplied by Line 12).	$121
14. Post-1986 undistributed earnings in Corporation A at start of 1993 (Line 6 minus Line 11)	200u
15. Post-1986 foreign income taxes in Corporation A at start of 1993 (Line 7 minus Line 13)	$121

(ii) Corporation M is deemed, under section 902(a) and paragraph (b) of this section, to have paid $60.50 of post-1986 foreign income taxes paid, or deemed paid, by Corporation A on or with respect to its post-1986 undistributed earnings (Part C, Line 10) and Corporation M includes that amount in gross income as a dividend under section 78. Both the income inclusion and the credit are subject to a separate limitation for dividends from Corporation A, a noncontrolled section 902 corporation.

Example 4. (i) Since 1987, domestic corporation M has owned 100 percent of the voting stock of controlled foreign corporation A, and Corporation A has owned 100 percent of the voting stock of controlled foreign corporation B. Corporations M, A and B use the calendar year as the taxable year. Corporations A and B are organized in the same foreign country and use the u as their functional currency. 1u equals $1 at all relevant times. Assume that all of the earnings of Corporations A and B are general limitation earnings and profits within the meaning of section 904(d)(2)(I), and that neither Corporation A nor Corporation B has any previously taxed income accounts. In 1992, Corporation B pays a dividend of 150u to Corporation A out of post-1986 undistributed earnings, and Corporation A computes an amount of foreign taxes deemed paid under section 902(b)(1). The dividend is not subpart F income to Corporation A because section 954(c)(3)(B)(i) (the same country dividend exception) applies. Pursuant to paragraph (c)(2)(ii) of this section, Corporation A is not required to include the deemed paid taxes in earnings and profits. Corporation A has no pre-1987 accumulated profits and a deficit in post-1986 undistributed earnings for 1992. In 1992, Corporation A pays a dividend of 100u to Corporation M out of its earnings and profits for 1992 (current earnings and profits). Under paragraph (b)(4) of this section, Corporation M is not deemed to have paid any of the foreign income taxes paid or deemed paid by Corporation A because Corporation A has a deficit in post-1986 undistributed earnings as of December 31, 1992, and the sum of its current plus accumulated profits is less than zero. Note that if instead of paying a dividend to Corporation A in 1992, Corporation B had made an additional investment of $150 in United States property under section 956, that amount would have been included in gross income by Corporation M under section 951(a)(1)(B) and Corporation M would have been deemed to have paid $50 of foreign income taxes paid by Corporation B. See sections 951(a)(1)(B) and 960.

A. Corporation B (second-tier corporation):	
1. Assumed post-1986 undistributed earnings in Corporation B at start of 1992	200u
2. Assumed post-1986 foreign income taxes in Corporation B at start of 1992	$50
3. Assumed pre-tax earnings and profits of Corporation B for 1992	150u
4. Assumed foreign income taxes paid or accrued in 1992	50u
5. Post-1986 undistributed earnings in Corporation B for 1992 (pre-dividend) (Line 1 plus Line 3 minus Line 4)	300u
6. Post-1986 foreign income taxes in Corporation B for 1992 (pre-dividend) (Line 2 plus Line 4 translated at the appropriate exchange rates).	$100
7. Dividends paid out of post-1986 undistributed earnings of Corporation B to Corporation A in 1992	150u
8. Percentage of Corporation B's post-1986 undistributed earnings paid to Corporation A (Line 7 divided by Line 5)	50%

9. Foreign income taxes of Corporation B deemed paid by Corporation A under section 902(b)(1) (Line 6 multiplied by Line 8).	$50
10. Post-1986 undistributed earnings in Corporation B at start of 1993 (Line 5 minus Line 7)	150u
11. Post-1986 foreign income taxes in Corporation B at start of 1993 (Line 6 minus Line 9)	$50
B. Corporation A (first-tier corporation):	
1. Assumed post-1986 undistributed earnings in Corporation A at start of 1992	(200u)
2. Assumed post-1986 foreign income taxes in Corporation A at start of 1992	0
3. Assumed pre-tax earnings and profits of Corporation A for 1992 (including 150u dividend from Corporation B)	200u
4. Assumed foreign income taxes paid or accrued by Corporation A in 1992	40u
5. Foreign income taxes paid by Corporation B in 1992 that are deemed paid by Corporation A (Part A, Line 9 of paragraph (i) of this *Example 4*).	$50
6. Post-1986 undistributed earnings in Corporation A for 1992 (pre-dividend) (Line 1 plus Line 3 minus Line 4)	(40u)
7. Post-1986 foreign income taxes in Corporation A for 1992 (pre-dividend) (Line 2 plus Line 4 translated at the appropriate exchange rates plus Line 5).	$90
8. Dividends paid out of current earnings and profits of Corporation A for 1992	100u
9. Percentage of post-1986 undistributed earnings of Corporation A paid to Corporation M in 1992 (Line 8 divided by the greater of Line 6 or zero).	0
10. Foreign income taxes paid and deemed paid by Corporation A in 1992 that are deemed paid by Corporation M under section 902(a) (Line 7 multiplied by Line 9).	0
11. Post-1986 undistributed earnings in Corporation A at start of 1993 (line 6 minus line 8)	(140u)
12. Post-1986 foreign income taxes in Corporation A at start of 1993 (Line 7 minus Line 10)	$90

(ii) For 1993, Corporation A has 500u of earnings and profits on which it pays 160u of foreign income taxes. Corporation A receives no dividends from Corporation B, and pays a 100u dividend to Corporation M. The 100u dividend to Corporation M carries with it some of the foreign income taxes paid and deemed paid by Corporation A in 1992, that were not deemed paid by Corporation M in 1992 because Corporation A had no post-1986 undistributed earnings. Thus, for 1993, Corporation M is deemed to have paid $125 of post-1986 foreign income taxes paid and deemed paid by Corporation A and includes that amount in gross income as a dividend under section 78, determined as follows:

1. Post-1986 undistributed earnings in Corporation A at start of 1993	(140u)
2. Post-1986 foreign income taxes in Corporation A at start of 1993	$90
3. Pre-tax earnings and profits of Corporation A for 1993	500u
4. Foreign income taxes paid or accrued by Corporation A in 1993	160u
5. Post-1986 undistributed earnings in Corporation A for 1993 (pre-dividend) (Line 1 plus Line 3 minus Line 4)	200u
6. Post-1986 foreign income taxes in Corporation A for 1993 (pre-dividend) (Line 2 plus Line 4 translated at the appropriate exchange rates).	$250
7. Dividends paid out of post-1986 undistributed earnings of Corporation A to Corporation M in 1993	100u
8. Percentage of post-1986 undistributed earnings of Corporation A paid to Corporation M in 1993 (Line 7 divided by Line 5).	50%
9. Foreign income taxes paid and deemed paid by Corporation A that are deemed paid by Corporation M in 1993 (Line 6 multiplied by Line 8).	$125
10. Post-1986 undistributed earnings in Corporation A at start of 1994 (Line 5 minus Line 7)	100u
11. Post-1986 foreign income taxes in Corporation A at start of 1994 (Line 6 minus Line 9)	$125

Example 5. (i) Since 1987, domestic corporation M has owned 100 percent of the voting stock of controlled foreign corporation A. Corporation M also conducts operations through a foreign branch. Both Corporation A and Corporation M use the calendar year as the taxable year. Corporation A uses the u as its functional currency and 1u equals $1 at all relevant times. Corporation A has no subpart F income, as defined in section 952, and no increase in earnings invested in United States property under section 956 for 1992. Corporation A also has no previously taxed income accounts. Corporation A has general limitation income and high withholding tax interest income that, by operation of section 954(b)(4), does not constitute foreign base company income under section 954(a). Because Corporation A is a controlled foreign corporation, it is not required to reduce post-1986 foreign income taxes by foreign taxes paid or accrued with respect to high withholding tax interest in excess of 5 percent. See § 1.902–1(a)(8)(iii). Corporation A pays a 60u dividend to Corporation M in 1992. For 1992, Corporation M is deemed, under paragraph (b) of this section, to have paid $24 of the post-1986 foreign income taxes paid by Corporation A and includes that amount in gross income under section 78 as a dividend, determined as follows:

1. Assumed post-1986 undistributed earnings in Corporation A at start of 1992 attributable to:	
(a) Section 904(d)(1)(B) high withholding tax interest	20u
(b) Section 904(d)(1)(I) general limitation income	55u
2. Assumed post-1986 foreign income taxes in Corporation A at start of 1992 attributable to:	
(a) Section 904(d)(1)(B) high withholding tax interest	$5
(b) Section 904(d)(1)(I) general limitation income	$20
3. Assumed pre-tax earnings and profits of Corporation A for 1992 attributable to:	
(a) Section 904(d)(1)(B) high withholding tax interest	20u
(b) Section 904(d)(1)(I) general limitation income	20u
4. Assumed foreign income taxes paid or accrued in 1992 on or with respect to:	
(a) Section 904(d)(1)(B) high withholding tax interest	10u
(b) Section 904(d)(1)(I) general limitation income	5u
5. Post-1986 undistributed earnings in Corporation A for 1992 (pre-dividend) attributable to:	
(a) Section 904(d)(1)(B) high withholding tax interest (Line 1(a) + Line 3(a) minus Line 4(a))	30u
(b) Section 904(d)(1)(I) general limitation income (Line 1(b) + Line 3(b) minus Line 4(b))	70u
(c) Total	100u

6. Post-1986 foreign income taxes in Corporation A for 1992 (pre-dividend) attributable to:	
(a) Section 904(d)(1)(B) high withholding tax interest (Line 2(a) + Line 4(a) translated at the appropriate exchange rates)	$15
(b) Section 904(d)(1)(I) general limitation income (Line 2(b) + Line 4(b) translated at the appropriate exchange rates)	$25
7. Dividends paid to Corporation M in 1992	60u
8. Dividends paid to Corporation M in 1992 attributable to section 904(d) separate categories pursuant to § 1.904–5(d):	
(a) Dividends paid to Corporation M in 1992 attributable to section 904(d)(1)(B) high withholding tax interest (Line 7 multiplied by Line 5(a) divided by Line 5(c).	18u
(b) Dividends paid to Corporation M in 1992 attributable to section 904(d)(1)(I) general limitation income (Line 7 multiplied by Line 5(b) divided by Line 5(c).	42u
9. Percentage of Corporation A's post-1986 undistributed earnings for 1992 paid to Corporation M attributable to:	
(a) Section 904(d)(1)(B) high withholding tax interest (Line 8(a) divided by Line 5(a))	60%
(b) Section 904(d)(1)(I) general limitation income (Line 8(b) divided by Line 5(b)	60%
10. Foreign income taxes of Corporation A deemed paid by Corporation M under section 902(a) attributable to:	
(a) Foreign income taxes of Corporation A deemed paid by Corporation M under section 902(a) with respect to section 904(d)(1)(B) high withholding tax interest (Line 6(a) multiplied by Line 9(a)).	$9
(b) Foreign income taxes of Corporation A deemed paid by Corporation M under section 902(a) with respect to section 904(d)(1)(I) general limitation income (Line 6(b) multiplied by Line 9(b).	$15
11. Post-1986 undistributed earnings in Corporation A at start of 1993 attributable to:	
(a) Section 904(d)(1)(B) high withholding tax interest (Line 5(a) minus Line 8(a))	12u
(b) Section 904(d)(1)(I) general limitation income (Line 5(b) minus Line 8(b))	28u
12. Post-1986 foreign income taxes in Corporation A at start of 1989 allocable to:	
(a) Section 904(d)(1)(B) high withholding tax interest (Line 6(a) minus Line 10(a))	$6
(b) Section 904(d)(1)(I) general limitation income (Line 6(b) minus Line 10(b))	$10

(ii) For purposes of computing Corporation M's foreign tax credit limitation, the post-1986 foreign income taxes of Corporation A deemed paid by Corporation M with respect to income in separate categories will be added to the foreign income taxes paid or accrued by Corporation M associated with income derived from Corporation M's branch operation in the same separate categories. The dividend (and the section 78 inclusion with respect to the dividend) will be treated as income in separate categories and added to Corporation M's other income, if any, attributable to the same separate categories. See section 904(d) and § 1.904–6.

(g) *Effective date.* This section applies to any distribution made in and after a foreign corporation's first taxable year beginning on or after January 1, 1987.

§ 1.902–2 Treatment of deficits in post-1986 undistributed earnings and pre-1987 accumulated profits of a first-, second-, or third-tier corporation for purposes of computing an amount of foreign taxes deemed paid under § 1.902–1.

(a) *Carryback of deficits in post-1986 undistributed earnings of a first-, second-, or third-tier corporation to pre-effective date taxable years*—(1) *Rule.* For purposes of computing foreign income taxes deemed paid under § 1.902–1(b) with respect to dividends paid by a first-, second-, or third-tier corporation when there is a deficit in the post-1986 undistributed earnings of that corporation and the corporation makes a distribution to shareholders that is a dividend or would be a dividend if there were current or accumulated earnings and profits, then the post-1986 deficit shall be carried back to the most recent pre-effective date taxable year of the first-, second-, or third-tier corporation with positive accumulated profits computed under section 902. See § 1.902–3(c)(2). For purposes of this § 1.902–2, a pre-effective date taxable year is a taxable year beginning before January 1, 1987, or a taxable year beginning after December 31, 1986, if the special effective date of § 1.902–1(a)(13) applies. The deficit shall reduce the section 902 accumulated profits in the most recent pre-effective date year to the extent thereof and any remaining deficit shall be carried back to the next preceding year or years until the deficit is completely allocated. The amount carried back shall reduce the deficit in post-1986 undistributed earnings. Any foreign income taxes paid in a post-effective date year will not be carried back to pre-effective date taxable years or removed from post-1986 foreign income taxes. See section 960 and the regulations under that section for rules governing the carryback of deficits and the computation of foreign income taxes deemed paid with respect to deemed income inclusions from controlled foreign corporations.

(2) *Examples.* The following examples illustrate the rules of this paragraph (a):

Example 1. (i) From 1985 through 1990, domestic corporation M owns 10 percent of the one class of stock of foreign corporation A. The remaining 90 percent of Corporation A's stock is owned by Z, a foreign corporation. Corporation A is not a controlled foreign corporation and uses the u as its functional currency. 1u equals $1 at all relevant times. Both Corporation A and Corporation M use the calendar year as the taxable year. Corporation A has pre-1987 accumulated profits and post-1986 undistributed earnings or deficits in post-1986 undistributed earnings, pays pre-1987 and post-1986 foreign income taxes, and pays dividends as summarized below:

Taxable year	1985	1986	1987	1988	1989	1990
Current E & P (deficits) of Corp. A	150u	150u	(100u)	100u	-0-	-0-
Current plus accumulated E & P of Corp. A	150u	300u	200u	250u	250u	200u
Post-'86 undistributed earnings of Corp. A			(100u)	100u	100u	50u
Post-'86 undistributed earnings of Corp. A reduced by current year dividend distributions (increased by deficit carryback).			-0-	100u	50u	50u
Foreign income taxes of Corp. A (annual)	120u	120u	$10	$50	-0-	-0-
Post-'86 foreign income taxes of Corp. A			$10	$60	$60	$30
12/31 distributions to Corp. M	-0-	-0-	5u	-0-	5u	-0-
12/31 distributions to Corp. Z	-0-	-0-	45u	-0-	45u	-0-

(ii) On December 31, 1987, Corporation A distributes a 5u dividend to Corporation M and a 45u dividend to Corporation Z. At that time Corporation A has a deficit of (100u) in post-1986 undistributed earnings and $10 of post-1986 foreign income taxes. The (100u) deficit (but not the post-1986 foreign income taxes) is carried back to offset the accumulated profits of 1986 and removed

from post-1986 undistributed earnings. The accumulated profits for 1986 are reduced to 50u (150u–100u). The dividend is paid out of the reduced 1986 accumulated profits. Foreign taxes deemed paid by Corporation M with respect to the 5u dividend are 12u (120u×(5u/50u)). See § 1.902–1(b)(3). Corporation M must include 12u in gross income (translated under the rule applicable to foreign income taxes paid on earnings accumulated in pre-effective date years) under section 78 as a dividend. Both the income inclusion and the foreign taxes deemed paid are subject to a separate limitation for dividends from Corporation A, a noncontrolled section 902 corporation. No earnings and profits remain in Corporation A with respect to 1986 after the carryback of the 1987 deficit and the December 31, 1987, dividend distributions to Corporations M and Z.

(iii) On December 31, 1989, Corporation A distributes a 5u dividend to Corporation M and a 45u dividend to Corporation Z. At that time Corporation A has 100u of post-1986 undistributed earnings and $60 of post-1986 foreign income taxes. Therefore, the dividend is considered paid out of Corporation A's post-1986 undistributed earnings. Foreign taxes deemed paid by Corporation M with respect to the 5u dividend are $3 ($60×5%[5u/100u]). Corporation M must include $3 in gross income under section 78 as a dividend. Both the income inclusion and the foreign taxes deemed paid are subject to a separate limitation for dividends from noncontrolled section 902 corporation A. Corporation A's post-1986 undistributed earnings as of January 1, 1990, are 50u (100u–50u). Corporation A's post-1986 foreign income taxes must be reduced by the amount of foreign taxes that would have been deemed paid had section 902 applied to the entire 50u dividend to Corporations M and Z, even though Corporation Z was not entitled to compute foreign taxes deemed paid on its share of the dividend. Section 1.902–1(a)(8). The amount of foreign income taxes that would have been deemed paid had section 902 applied to the entire 50u dividend is $30 ($60×50%[50u/100u]). Thus, post-1986 foreign income taxes as of January 1, 1990, are $30 ($60–$30).

Example 2. The facts are the same as in *Example 1,* except that Corporation A has a deficit in its post-1986 undistributed earnings of (150u) on December 31, 1987. The deficit is carried back to 1986 and reduces accumulated profits for that year to -0-. Thus, the foreign income taxes paid with respect to the 1986 accumulated profits will never be deemed paid. The 1987 dividend is deemed to be out of Corporation A's 1985 accumulated profits. Foreign taxes deemed paid by Corporation M under section 902 with respect to the 5u dividend paid on December 31, 1987, are 4u (120u×5u/150u). See § 1.902–1(b)(3). As a result of the December 31, 1987, dividend distributions, 100u (150u–50u) of earnings and profits and 80u (120u reduced by 40u[120u×50u/150u] of foreign taxes that would have been deemed paid had section 902 applied to the total dividend paid to all shareholders out of 1985 accumulated profits) remain in Corporation A with respect to 1985.

Example 3. (i) From 1986 through 1991, domestic corporation M owns 10 percent of the one class of stock of foreign corporation A. The remaining 90 percent of Corporation A's stock is owned by Corporation Z, a foreign corporation. Corporation A is not a controlled foreign corporation and uses the u as its functional currency. 1u equals $1 at all relevant times. Both Corporation A and Corporation M use the calendar year as the taxable year. Corporation A has pre-1987 accumulated profits and post-1986 undistributed earnings or deficits in post-1986 undistributed earnings, pays pre-1987 and post-1986 foreign income taxes, and pays dividends as summarized below:

Taxable year	1986	1987	1988	1989	1990	1991
Current E & P (deficits) of Corp. A	100u	(50u)	150u	75u	25u	-0-
Current plus accumulated E & P of Corp. A	100u	50u	200u	175u	200u	80u
Post-'86 undistributed earnings of Corp. A		(50u)	100u	75u	100u	-0-
Post-'86 undistributed earnings of Corp. A reduced by current year dividend distributions (increased by deficit carryback).		(50u)	-0-	75u	-0-	-0-
Foreign income taxes (annual) of Corp. A	80u	-0-	$120	$20	$20	-0-
Post-'86 foreign income taxes of Corp. A		-0-	$120	$20	$40	-0-
12/31 distributions to Corp. M	-0-	-0-	10u	-0-	12u	-0-
12/31 distributions to Corp. Z	-0-	-0-	90u	-0-	108u	-0-

(ii) On December 31, 1988, Corporation A distributes a 10u dividend to Corporation M and a 90u dividend to Corporation Z. At that time Corporation A has 100u in its post-1986 undistributed earnings and $120 in its post-1986 foreign income taxes. Corporation M is deemed, under § 1.902–1(b)(1), to have paid $12 ($120×10%[10u/100u]) of the post-1986 foreign income taxes paid by Corporation A and includes that amount in gross income under section 78 as a dividend. Both the income inclusion and the foreign taxes deemed paid are subject to a separate limitation for dividends from noncontrolled section 902 Corporation A. Corporation A's post-1986 undistributed earnings as of January 1, 1989, are -0- (100u − 100u). Its post-1986 foreign taxes as of January 1, 1989, also are -0-, $120 reduced by $120 of foreign income taxes paid that would have been deemed paid had section 902 applied to the entire 100u dividend distribution to Corporations M and Z ($120×100%[100u/100u]).

(iii) On December 31, 1990, Corporation A distributes a 12u dividend to Corporation M and a 108u dividend to Corporation Z. At that time Corporation A has 100u in its post-1986 undistributed earnings and $40 in its post-1986 foreign income taxes. The dividend is paid out of post-1986 undistributed earnings to the extent thereof (100u), and the remainder of 20u is paid out of 1986 accumulated profits. Under § 1.902–1(b)(2), the 12u dividend to Corporation M is deemed to be paid out of post-1986 undistributed earnings to the extent of 10u (100u×12u/120u) and the remaining 2u is deemed to be paid out of Corporation A's 1986 accumulated profits. Similarly, the 108u dividend to Corporation Z is deemed to be paid out of post-1986 undistributed earnings to the extent of 90u (100u×108u/120u) and the remaining 18u is deemed to be paid out of Corporation A's 1986 accumulated profits. Foreign income taxes deemed paid by Corporation M under section 902 with respect to the portion of the dividend paid out of post-1986 undistributed earnings are $4 ($40×10%[10u/100u]), and foreign taxes deemed paid by Corporation M with respect to the portion of the dividend deemed paid out of 1986 accumulated profits are 1.6u (80u × 2u/100u). Corporation M must include $4 plus 1.6u translated under the rule applicable to foreign income taxes paid on earnings accumulated in taxable years prior to the effective date of the Tax Reform Act of 1986 in gross income as a dividend under section 78. The income inclusion and the foreign income taxes deemed paid are subject to a separate limitation for dividends from noncontrolled section 902 Corporation A. As of January 1, 1991, Corporation A's post-1986 undistributed earnings are -0- (100u − 100u). 80u (100u − 20u) of earnings and profits remain with respect to 1986. Post-1986 foreign taxes as of January 1, 1991, are -0-, $40 reduced by $40 of foreign income taxes paid that would have been deemed paid had section 902 applied to the entire 100u dividend distribution out of post-1986 undistributed earnings to Corporations M and Z ($40×100%[100u/100u]). Corporation A has 64u of foreign income taxes remaining with respect to 1986, 80u reduced by 16u [80u×20u/100u] of foreign income taxes that would have been deemed paid had section 902 applied to the entire 20u dividend distribution to Corporations M and Z out of 1986 accumulated profits.

(b) *Carryforward of deficits in pre-1987 accumulated profits of a first-, second-, or third-tier corporation to post-1986 undistributed earnings for purposes of section 902*—(1) *General rule.* For purposes of computing foreign income taxes deemed paid under § 1.902–1(b) with respect to dividends paid by a first-, second-, or third-tier

corporation out of post-1986 undistributed earnings, the amount of a deficit in accumulated profits determined under section 902 of the foreign corporation as of the end of its last pre-effective date taxable year is carried forward and reduces post-1986 undistributed earnings on the first day of the foreign corporation's first taxable year beginning after December 31, 1986, or on the first day of the first taxable year in which the ownership requirements of section 902(c)(3)(B) and § 1.902–1(a)(1) through (4) are met if the special effective date of § 1.902–1(a)(13) applies. Any foreign income taxes paid with respect to a pre-effective date year shall not be carried forward and included in post- 1986 foreign income taxes. Post-1986 undistributed earnings may not be reduced by the amount of a pre-1987 deficit in earnings and profits computed under section 964(a). See section 960 and the regulations under that section for rules governing the carryforward of deficits and the computation of foreign income taxes deemed paid with respect to deemed income inclusions from controlled foreign corporations. For translation rules governing carryforwards of deficits in pre-1987 accumulated profits to post-1986 taxable years of a foreign corporation with a dollar functional currency, see § 1.985–6(d)(2).

(2) *Effect of pre-effective date deficit.* If a foreign corporation has a deficit in accumulated profits as of the end of its last pre-effective date taxable year, then the foreign corporation cannot pay a dividend out of pre-effective date years unless there is an adjustment made (for example, a refund of foreign taxes paid) that restores section 902 accumulated profits to a pre-effective date taxable year or years. Moreover, if a foreign corporation has a deficit in section 902 accumulated profits as of the end of its last pre-effective date taxable year, then no deficit in post-1986 undistributed earnings will be carried back under paragraph (a) of this section. For rules concerning carrybacks of eligible deficits from post-1986 undistributed earnings to reduce pre-1987 earnings and profits computed under section 964(a), see section 960 and the regulations under that section.

(3) *Examples.* The following examples illustrate the rules of this paragraph (b).

Example 1. (i) From 1984 through 1988, domestic corporation M owns 10 percent of the one class of stock of foreign corporation A. The remaining 90 percent of Corporation A's stock is owned by Corporation Z, a foreign corporation. Corporation A is not a controlled foreign corporation and uses the u as its functional currency. 1u equals $1 at all relevant times. Both Corporation A and Corporation M use the calendar year as the taxable year. Corporation A has pre-1987 accumulated profits or deficits in accumulated profits and post-1986 undistributed earnings, pays pre-1987 and post-1986 foreign income taxes, and pays dividends as summarized below:

Taxable year	1984	1985	1986	1987	1988
Current E & P (deficits) of Corp. A	25u	(100u)	(25u)	200u	100u
Current Plus Accumulated E & P (Deficits) of Corp. A	25u	(75u)	(100u)	100u	50u
Post-'86 Undistributed Earnings of Corp. A				100u	50u
Post-'86 Undistributed Earnings of Corp. A Reduced By Current Year Dividend Distributions (reduced by deficit carryforward).				(50u)	50u
Foreign Income Taxes (Annual) of Corp. A	20u	5u	-0-	$100	$50
Post-'86 Foreign Income Taxes of Corp. A				$100	$50
12/31 Distributions to Corp. M	-0-	-0-	-0-	15u	-0-
12/31 Distributions to Corp. Z	-0-	-0-	-0-	135u	-0-

(ii) On December 31, 1987, Corporation A distributes a 150u dividend, 15u to Corporation M and 135u to Corporation Z. Corporation A has 200u of current earnings and profits for 1987, but its post-1986 undistributed earnings are only 100u as a result of the reduction for pre-1987 accumulated deficits required under paragraph (b)(1) of this section. Corporation A has $100 of post-1986 foreign income taxes. Only 100u of the 150u distribution is a dividend out of post-1986 undistributed earnings. Foreign income taxes deemed paid by Corporation M in 1987 with respect to the 10u dividend attributable to post-1986 undistributed earnings, computed under § 1.902–1(b), are $10 ($100×10%[10u/100u]). Corporation M includes this amount in gross income under section 78 as a dividend. Both the income inclusion and the foreign taxes deemed paid are subject to a separate limitation for dividends from noncontrolled section 902 corporation A. After the distribution, Corporation A has (50u) of post-1986 undistributed earnings (100u–150u) and -0- post-1986 foreign income taxes, $100 reduced by $100 of foreign income taxes paid that would have been deemed paid had section 902 applied to the entire 100u dividend distribution out of post-1986 undistributed earnings to Corporations M and Z ($100×100%[100u/100u]).

(iii) The remaining 50u of the 150u distribution cannot be deemed paid out of accumulated profits of a pre-1987 year because Corporation A has an accumulated deficit as of the end of 1986 that eliminated all pre-1987 accumulated profits. See paragraph (b)(2) of this section. The 50u is a dividend out of current earnings and profits under section 316(a)(2), but Corporation M is not deemed to have paid any additional foreign income taxes paid by Corporation A with respect to that 50u dividend out of current earnings and profits. See § 1.902–1(b)(4).

Example 2. (i) From 1986 through 1991, domestic corporation M owns 10 percent of the one class of stock of foreign corporation A. The remaining 90 percent of Corporation A's stock is owned by Corporation Z, a foreign corporation. Corporation A is not a controlled foreign corporation and uses the u as its functional currency. 1u equals $1 at all relevant times. Both Corporation A and Corporation M use the calendar year as the taxable year. Corporation A has pre-1987 accumulated profits or deficits in accumulated profits and post-1986 undistributed earnings, pays post-1986 foreign income taxes, and pays dividends as summarized below:

Taxable year	1986	1987	1988	1989	1990
Current E & P (Deficits) of Corp. A	(100u)	150u	(150u)	100u	250u
Current Plus Accumulated E & P (Deficits) of Corp. A	(100u)	50u	(200u)	(100u)	50u
Post-'86 Undistributed Earnings of Corp. A		50u	(200u)	(100u)	50u
Post-'86 Undistributed Earnings of Corp. A Reduced By Current Year Dividend Distributions (reduced by deficit carryforward).		(50u)	(200u)	(200u)	-0-
Foreign Income Taxes (Annual) of Corp. A	-0-	$120	-0-	$50	$100
Post-'86 Foreign Income Taxes of Corp. A		$120	-0-	$50	$150
12/31 Distributions to Corp. M	-0-	10u	-0-	10u	5u
12/31 Distributions to Corp. Z	-0-	90u	-0-	90u	45u

(ii) On December 31, 1987, Corporation A distributes a 10u dividend to Corporation M and a 90u dividend to Corporation Z. At the time of the distribution, Corporation A has 50u of post-1986 undistributed earnings and 150u of current earnings and profits. Thus, 50u of the dividend distribution (5u to Corporation M and 45u to Corporation Z) is a dividend out of post-1986 undistributed earnings. The remaining 50u is a dividend out of current earnings and profits under section 316(a)(2), but Corporation M is not deemed to have paid any additional foreign income taxes paid by Corporation A with respect to that 50u dividend out of current earnings and profits. See § 1.902–1(b)(4). Note that even if there were no current earnings and profits in Corporation A, the remaining 50u of the 100u distribution cannot be deemed paid out of accumulated profits of a pre-1987 year because Corporation A has an accumulated deficit as of the end of 1986 that eliminated all pre-1987 accumulated profits. See paragraph (b)(2) of this section. Corporation A has $120 of post-1986 foreign income taxes. Foreign taxes deemed paid by Corporation M under section 902 with respect to the 5u dividend out of post-1986 undistributed earnings are $12 ($120×10%[5u/50u]). Corporation M includes this amount in gross income as a dividend under section 78. Both the foreign taxes deemed paid and the deemed dividend are subject to a separate limitation for dividends from noncontrolled section 902 Corporation A. As of January 1, 1988, Corporation A has (50u) in its post-1986 undistributed earnings (50u − 100u) and -0- in its post-1986 foreign income taxes, $120 reduced by $120 of foreign taxes that would have been deemed paid had section 902 applied to the entire dividend out of post-1986 undistributed earnings ($120×100%[50u/50u]).

(iii) On December 31, 1989, Corporation A distributes a 10u dividend to Corporation M and a 90u dividend to Corporation Z. Although the distribution is considered a dividend in its entirety out of 1989 earnings and profits pursuant to section 316(a)(2), post-1986 undistributed earnings are (100u). Accordingly, for purposes of section 902, no portion of the dividend is deemed to be out of post-1986 undistributed earnings, and Corporation M is deemed to have paid no post-1986 foreign income taxes. See § 1.902–1(b)(4). Corporation A's post-1986 undistributed earnings as of January 1, 1990, are (200u) ((100u) − 100u). Corporation A's post-1986 foreign income taxes are not reduced because no taxes were deemed paid.

(iv) On December 31, 1990, Corporation A distributes a 5u dividend to Corporation M and a 45u dividend to Corporation Z. At that time Corporation A has 50u of post-1986 undistributed earnings, and $150 of post-1986 foreign income taxes. Foreign taxes deemed paid by Corporation M under section 902 with respect to the 5u dividend are $15 ($150×10%[5u/50u]). Post-1986 undistributed earnings as of January 1, 1991, are -0- (50u − 50u). Post-1986 foreign income taxes as of January 1, 1991, also are -0-, $150 reduced by $150 ($150×100%[50u/50u]) of foreign income taxes that would have been deemed paid had section 902 applied to the entire dividend of 50u.

Par. 4. Newly designated § 1.902–3 is amended by revising the section heading, paragraph (a) introductory text, and paragraph (l) to read as follows:

§ 1.902–3 Credit for domestic corporate shareholder of a foreign corporation for foreign income taxes paid with respect to accumulated profits of taxable years of the foreign corporation beginning before January 1, 1987.

(a) *Definitions.* For purposes of section 902 and §§ 1.902–3 through 1.902–4—

* * * * *

(l) *Effective date.* Except as provided in § 1.902–4, this section applies to any distribution received from a first-tier corporation by its domestic shareholder after December 31, 1964, and before the beginning of the foreign corporation's first taxable year beginning after December 31, 1986. If, however, the first day on which the ownership requirements of section 902(c)(3)(B) and § 1.902–1(a) (1) through (4) are met with respect to the foreign corporation is in a taxable year of the foreign corporation beginning after December 31, 1986, then this § 1.902–3 shall apply to all taxable years beginning after December 31, 1964, and before the year in which the ownership requirements are first met. See § 1.902–1(a)(13)(iii). For corresponding rules applicable to distributions received by the domestic shareholder prior to January 1, 1965, see § 1.902–5 as contained in the 26 CFR part 1 edition revised as of April 1, 1976.

Margaret Milner Richardson,

Commissioner of Internal Revenue

[FR Doc. 95–173 Filed 1–5–95; 8:45 am]

BILLING CODE 4830–01–U

ENVIRONMENTAL PROTECTION AGENCY

40 CFR Part 52

[Region II Docket No. 138, NY20–1–6729b; FRL–5124–6]

Approval and Promulgation of Implementation Plans; State of New York; Clean Fuel Fleet Opt Out

AGENCY: Environmental Protection Agency (EPA).

ACTION: Proposed rule.

SUMMARY: The EPA proposes to approve the State Implementation Plan (SIP) revision submitted by the State of New York related to the requirement that the State submit either the Clean Fuel Fleet program (CFFP) or a substitute program that meets the requirements of the Clean Air Act. The State has submitted such a substitute measure for a portion of the required program. In the final rules section of this **Federal Register**, EPA is partially approving and partially disapproving the State's SIP revision as a direct final rule without prior proposal because the Agency views this as a noncontroversial revision and anticipates no adverse comments. A detailed rationale for the action is set forth in the direct final rule. If no adverse comments are received in response to that direct final rule no further activity is contemplated in relation to this proposed rule. If EPA receives adverse comments, the direct final rule will be withdrawn and all public comments received will be addressed in a subsequent final rule based on this proposed rule. The EPA will not institute a second comment period on this proposed rule. Any parties interested in commenting on this action should do so at this time.

DATES: Comments must be received on or before February 6, 1995.

ADDRESSES: All comments should be addressed to:

William S. Baker, Chief, Air Programs Branch, Air and Waste Management Division, Environmental Protection Agency, Region II Office, 26 Federal Plaza, New York, New York 10278.

Copies of the State submittal are available at the following address for inspection during normal business hours:

Environmental Protection Agency, Region II Office, Library, 26 Federal Plaza, room 402, New York, New York 10278.

New York Department of Environmental Conservation, Division of Air Resources, 50 Wolf Road, Albany, New York 12233.

FOR FURTHER INFORMATION CONTACT: Michael P. Moltzen, Environmental Engineer, Technical Evaluation Section, Air Programs Branch, Environmental Protection Agency, 26 Federal Plaza, Room 1034A, New York, New York 10278, (212) 264–2517.

SUPPLEMENTARY INFORMATION: For additional information see the direct final rule which is published in the rules section of this **Federal Register**.

Dated: November 21, 1994.

William J. Muszynski, P.E.

Acting Regional Administrator.

[FR Doc. 95–289 Filed 1–5–95; 8:45 am]

BILLING CODE 6560–50–P

40 CFR Part 52

[MA–26–1–6173b; A–1–FRL–5123–6]

Approval and Promulgation of Air Quality Implementation Plans; Massachusetts; RACT for Nichols and Stone Company

AGENCY: Environmental Protection Agency (EPA).

ACTION: Proposed rule.

SUMMARY: EPA is proposing to approve a State Implementation Plan (SIP) revision submitted by the State of Massachusetts. This revision establishes and requires reasonably available control technology (RACT) for Nichols & Stone Company in Gardner, MA. In the final rules section of this **Federal Register**, EPA is approving the State's SIP revision as a direct final rule without prior proposal because the Agency views this as a noncontroversial revision amendment and anticipates no adverse comments. A detailed rationale for the approval is set forth in the direct final rule. If no adverse comments are received in response to that direct final rule, no further activity is contemplated in relation to this proposed rule. If EPA receives adverse comments, the direct final rule will be withdrawn and all public comments received will be addressed in a subsequent final rule based on this proposed rule. EPA will not institute a second comment period on this document. Any parties interested in commenting on this document should do so at this time.

DATES: Comments must be received by February 6, 1995.

ADDRESSES: Comments may be mailed to Linda M. Murphy, Director, Air, Pesticides and Toxics Management Division, U.S. Environmental Protection Agency, Region I, JFK Federal Building, Boston, MA 02203. Copies of the documents relevant to this action are available for public inspection during normal business hours, by appointment at the Air, Pesticides and Toxics Management Division, U.S. Environmental Protection Agency, Region I, One Congress Street, 10th floor, Boston, MA; and Division of Air Quality Control, Department of Environmental Protection, One Winter Street, 8th Floor, Boston, MA 02108.

SUPPLEMENTARY INFORMATION: See the information provided in the direct final rule which is located in the rules section of this **Federal Register**.

Dated: September 18, 1994.

John P. DeVillars,

Regional Administrator, Region I.

[FR Doc. 95–293 Filed 1–5–95; 8:45 am]

BILLING CODE 6560–50–P

40 CFR Part 52

[AL 38–1–6571b; FRL–5123–9]

Clean Air Act Approval and Promulgation of Redesignation of the Leeds Area of Jefferson County, AL, to Attainment for Lead

AGENCY: Environmental Protection Agency (EPA).

ACTION: Proposed rule.

SUMMARY: The EPA proposes to approve the State Implementation Plan (SIP) revision submitted by the State of Alabama for the purpose of redesignating the Leeds area to attainment for lead. In the final rules section of this **Federal Register**, the EPA is approving the State's SIP revision as a direct final rule without prior proposal because the Agency views this as a noncontroversial revision amendment and anticipates no adverse comments. A detailed rational for the approval is set forth in the direct final rule. If no adverse comments are received in response to that direct final rule, no further activity is contemplated in relation to this proposed rule. If EPA receives adverse comments, the direct final rule will be withdrawn and all public comments received will be addressed in a subsequent final rule based on this proposed rule. The EPA will not institute a second comment period on this document. Any parties interested in commenting on this document should do at this time.

DATES: To be considered, comments must be received by February 6, 1995.

ADDRESSES: Written comments should be addressed to: Kimberly Bingham, Regulatory Planning and Development Section, Air Programs Branch, Air, Pesticides & Toxics Management Division, Region 4 Environmental Protection Agency, 345 Courtland Street, NE., Atlanta, Georgia 30365.

Copies of the material submitted by the state of Alabama may be examined during normal business hours at the following locations:

Air and Radiation Docket and Information Center (Air Docket 6102), U.S. Environmental Protection Agency, 401 M Street, SW., Washington, DC 20460.

Environmental Protection Agency, Region 4 Air Programs Branch, 345 Courtland Street, NE., Atlanta, Georgia 30365.

Alabama Department of Environmental Management, Office of General Counsel, 1751 Cong. W. L. Dickinson Drive, Montgomery, Alabama 36130.

FOR FURTHER INFORMATION CONTACT: Kimberly Bingham, Regulatory Planning and Development Section, Air Programs Branch, Air Pesticides & Toxics Management Division, Region 4 Environmental Protection Agency, 345 Courtland Street, NE, Atlanta, Georgia 30365. The telephone number is (404) 347–2864.

SUPPLEMENTARY INFORMATION: For additional information see the direct final rule which is published in the rules section of this **Federal Register**.

Dated: December 7, 1994.

Patrick M. Tobin,

Acting Regional Administrator.

[FR Doc. 95–285 Filed 1–5–95; 8:45 am]

BILLING CODE 6560–50–P

40 CFR Part 52

[MD3–2–5624b, MD10–2–6169b, MD24–2–5968b, MD25–1–6146b, MD28–1–6147b; FRL–5123–4]

Approval and Promulgation of Air Quality Implementation Plans; Maryland; VOC RACT Catch-ups and Stage I Vapor Recovery

AGENCY: Environmental Protection Agency (EPA).

ACTION: Proposed rule.

SUMMARY: EPA proposes to approve State Implementation Plan (SIP) revisions submitted by the State of Maryland. These revisions establish statewide applicability for Maryland's category-specific volatile organic compound (VOC) reasonably available control technology (RACT) regulations, lower the applicability threshold for VOC RACT regulations, and correct deficiencies in Maryland's Stage I Vapor Recovery rule. These revisions were submitted to comply with the RACT ''Catch-up'' and ''Fix-up'' provisions of the Clean Air Act (the Act). The intended effect of this action is to propose approval of revisions to Maryland's category-specific VOC RACT regulations, including Stage I. This action is being taken in accordance with the SIP submittal and revision provisions of the Act.

In the final rules section of this **Federal Register**, EPA is approving the State's SIP revision as a direct final rule without prior proposal because the Agency views this as a noncontroversial SIP revision and anticipates no adverse comments. A detailed rationale for the approval is set forth in the direct final rule. If no adverse comments are received in response to this proposed rule, no further activity is contemplated in relation to this rule. If EPA receives adverse comments, the direct final rule will be withdrawn and all public

comments received will be addressed in a subsequent final rule based on this proposed rule. EPA will not institute a second comment period on this action. Any parties interested in commenting on this action should do so at this time.

DATES: Comments must be received in writing by February 6, 1995.

ADDRESSES: Written comments on this action should be addressed to Thomas J. Maslany, Director, Air Radiation, and Toxics Division (3AT00), U.S. Environmental Protection Agency, Region III, 841 Chestnut Building, Philadelphia, Pennsylvania 19107. Copies of the documents relevant to this action are available for public inspection during normal business hours at the Air, Radiation, and Toxics Division, U.S. Environmental Protection Agency, Region III, 841 Chestnut Building, Philadelphia, Pennsylvania 19107 and the Maryland Department of the Environment, 2500 Broening Highway, Baltimore, Maryland, 21224.

FOR FURTHER INFORMATION CONTACT: Maria A. Pino, (215) 597–9337.

SUPPLEMENTARY INFORMATION: See the information provided in the direct final action of the same title, pertaining to revisions to Maryland's category-specific VOC RACT regulations, including Stage I, which is located in the Rules and Regulations Section of this **Federal Register**.

List of Subjects in 40 CFR Part 52

Environmental protection, Air pollution control, Hydrocarbons, Intergovernmental relations, Ozone, Reporting and recordkeeping requirements.

Authority: 42 U.S.C. 7401–7671q.

Dated: October 19, 1994.

Peter H. Kostmayer,

Regional Administrator, Region III.

[FR Doc. 95–287 Filed 1–5–95; 8:45 am]

BILLING CODE 6560–50–M

FEDERAL COMMUNICATIONS COMMISSION

47 CFR Parts 61 and 69

[CC Docket No. 91–213, FCC No. 94–325]

Transport Rate Structure and Pricing

AGENCY: Federal Communications Commission.

ACTION: Proposed rule.

SUMMARY: On December 22, 1994, the Commission released a Supplemental Notice of Proposed Rulemaking inviting comments from interested parties on proposals to stimulate the resale and sharing of network facilities by common carriers through the use of ''split billing.'' Split billing is a billing arrangement that enables multiple customers to share or resell entrance facilities and direct-trunked transport facilities. Implementing procedures for common carriers to provide split billing will enable smaller customers to better obtain the benefits of, and contribute to, the Commission's goal of more efficient use of network facilities by allowing pricing to reflect costs, by permitting a rate structure which is conducive to competition, and by encouraging the development of full and fair competition.

DATES: Comments must be received on or before February 1, 1995; reply comments must be received on or before February 16, 1995.

ADDRESSES: Federal Communications Commission, 1919 M Street, N.W., Washington, D.C. 20554; one copy shall also be filed with the Commission's copy contractor, International Transcription Services, Inc. (ITS, Inc.), 2100 M Street, N.W., Suite 140, Washington, D.C. 20037 (202) 857–3800.

FOR FURTHER INFORMATION CONTACT: Debra Sabourin, Common Carrier Bureau, (202) 418–1530.

SUPPLEMENTARY INFORMATION:

1. Summary of Transport Rate Structure and Pricing

On December 22, 1994, the Commission released a Supplemental Notice of Proposed Rulemaking in its Transport Rate Structure and Pricing proceeding, CC Docket No. 91–213, FCC No. 94–325. In this Order, the Commission tentatively concludes that it is in the public interest to require local exchange carriers (LECs) to offer split billing for their transport service, and that it is also in the public interest to require these carriers to include in their tariffs procedures for offering transport split billing. Split billing is a billing arrangement that enables multiple customers to share or resell entrance facilities and direct-trunked transport facilities.

Proposed rule. Through LEC split billing and shared network arrangements, customers can reap the maximum benefit from the restructured transport rates. LEC split billing would help smaller interexchange carriers (IXCs) reduce their access costs by enabling them to resell the services of other IXCs or by utilizing network sharing arrangements with other carriers to transmit and terminate interstate calls. It could also solve the practical billing problems that have arisen regarding Feature Group A and B access services. Finally, split billing could permit more efficient deployment and use of transport facilities, a primary goal of the transport restructure. The Commission therefore tentatively concludes that split billing for transport service is in the public interest. It further tentatively concludes that it should require the LECs to include in their tariffs procedures for offering transport split billing. The Commission seeks comment on these conclusions.

Implementation. As the record on this issue indicates, the parties strongly disagree on how best to implement split billing. Although the industry's Ordering and Billing Forum (OBF) has made progress, it has not yet been able to reach final closure on an access charge split billing prototype after 11 months of consideration. The Commission therefore seeks comment on how best to implement the proposed split billing requirement.

First, the Commission seeks comment on a proposal offered by CompTel in the transport tariff review proceeding. CompTel urges the Commission to adopt the following affirmative steps to make resale and sharing feasible: (1) require the LECs to permit switched and special access facilities to be combined at the customer POP, LEC serving wire centers, or any other designated hubbing locations; (2) require the LECs to permit multiple carriers of record for DS3 and DS1 entrance and interoffice facilities; (3) require the LECs to offer ''split billing'' for multiplexing equipment located at a hub; and (4) require the LECs to permit the IXC to specify (i) the type and grade of switched access service as well as the code at the terminating hub, and (ii) the customer premises location associated with special access channels. The Commission seeks comment on whether it should adopt any of these proposed requirements.

Second, the Commission seeks comment on whether a split billing charge levied on multiple customers of record using a single high-capacity facility should be set to recover the cost of unused as well as used capacity. For example, should a LEC be allowed to charge an end-user customer for its use of a high-capacity facility at a rate computed by dividing total flat charges for the entrance and interoffice facilities by the number of end-users whose traffic is carried over that facility, with a pro rata allocation of the costs of unused capacity in that rate? Commenters should address the issue of which entity would be responsible for determining the allocation, the service design and capability and the circuit facility assignment under such an

arrangement. In addition, commenters should discuss whether this form of split billing should be available to resellers of access service, or should be limited to customers seeking to share dedicated facilities for their own use. Commenters should also address methods to ensure that Feature Group A and B users are not double-billed for their use of the same facilities.

In addition, the Commission seeks comment on whether the type of split billing and shared network arrangements offered by NYNEX and Southwestern Bell adequately address customer needs for such arrangements. It also invites parties to comment on whether similar or modified arrangements should be offered by all LECs. Commenters should specifically address whether the ''host/secondary customer of record'' arrangement, under which a single IXC serves as the ''host'' customer of record, and is responsible for service arrangement and control, would satisfy the access customers' needs for sharing and resale of dedicated transport facilities. Commenters should also discuss how such offerings could be expanded or improved to meet customer needs. Commenters advocating that there be a single, host customer of record for the access service should specifically discuss how this split billing arrangement would apply to voice-grade access for Feature Group A and B services.

Finally, the Commission seeks comment on any other form of split billing that commenters believe would achieve the goals it has identified. Of particular interest would be any split billing prototype under consideration by the industry's OBF. Commenters who do not support a requirement that the LECs include in their tariffs procedures for offering split billing and shared network configurations should discuss alternative ways to satisfy LEC provision of these arrangements.

The full text of this Commission decision is available for inspection and copying during normal business hours in the FCC Dockets Branch (Room 230), 1919 M Street NW., Washington, DC. The complete text of this decision may also be purchased from the Commission's copy contractor, ITS, Inc.

2. Procedural Matters

Ex Parte. This is a non-restricted notice and comment rulemaking. *Ex parte* presentations are permitted, except during the Sunshine period, provided they are disclosed as provided in the Commission's rules. See generally, 47 CFR 1.1202, 1.1203, and 1.1206(a).

Notice and Comment Provision. Notice is given of the proposed changes in the Commission's policies regarding split billing. Comment is invited on the proposals pursuant to Sections 1, 4 (i) and (j), 201–205, 218, and 403 of the Communications Act as amended, 47 U.S.C. §§ 151.1 54(i) and (j), 201–205, 218, and 403. To file formally in this proceeding, parties must file an original and five copies of all comments, reply comments, and supporting comments. Parties wanting each Commissioner to receive a personal copy of their comments must file an original plus nine copies. All comments and reply comments should be sent to the Office of the Secretary. In addition, parties should file two copies of any such pleadings with the Tariff Division, Common Carrier Bureau, Room 518, 1919 M Street, N.W., Washington, DC 20554. Comments and reply comments will be available for public inspection during regular business hours in the FCC Reference Center, Room 239, 1919 M Street, NW., Washington, DC.

Regulatory Flexibility Act. The Regulatory Flexibility Act of 1980 does not apply to this rulemaking proceeding because the proposed rule amendments, if promulgated, would not have a significant economic impact on a substantial number of small business entities, as defined by Section 601(3) of the Regulatory Flexibility Act. Carriers providing interstate transport services directly subject to the proposed rule amendment do not qualify as small businesses since they are dominant in their field of operation. The Commission will, however, take appropriate steps to ensure that the special circumstances of the smaller local exchange carriers are carefully considered in resolving those issues. The Secretary shall send a copy of this Supplemental Notice of Proposed Rulemaking, including the certification, to the Chief Counsel for Advocacy of the Small Business Administration in accordance with paragraph 603(a) of the Regulatory Flexibility Act. Pub.L. No. 96–354, 94 Stat. 1164, 5 U.S.C. Section 601 et seq. (1981).

Federal Communications Commission.

William F. Caton,

Acting Secretary.

[FR Doc. 95–267 Filed 1–5–95; 8:45 am]

BILLING CODE 6712–01–M

INTERSTATE COMMERCE COMMISSION

49 CFR Chapter X

[Ex Parte No. MC–214]

Petition for Rulemaking—Interlining by Motor Contract Carriers

AGENCY: Interstate Commerce Commission.

ACTION: Advance notice of proposed rulemaking.

SUMMARY: The Commission issues an advance notice of proposed rulemaking to examine restrictions against interlining between common and contract motor carriers. The Commission will consider whether there is a need for revisions in present rules and what revisions can be made in view of statutory restrictions. This proceeding is instituted in response to a petition asking the Commission to remove the present restrictions. Following receipt of public comments, the Commission will decide whether any changes to the present rules are warranted. If so, a notice of proposed rulemaking will be issued. Otherwise, the proceeding will be discontinued.

DATES: Any person interested in participating in this proceeding as a party of record may file comments by March 7, 1995.

ADDRESSES: Send an original and 10 copies of pleadings referring to Ex Parte No. MC–214 to: Office of the Secretary, Case Control Branch, Interstate Commerce Commission, 1201 Constitution Avenue, NW., Washington, DC 20423.

FOR FURTHER INFORMATION CONTACT: Joseph H. Dettmar, (202) 927–5660. [TDD for the hearing impaired: (202) 927–5721.]

SUPPLEMENTARY INFORMATION: For a more detailed discussion of the current statutes and regulations, the issues raised by the petition and comments, and the information that is needed to go forward, see the Commission's separate decision in this proceeding issued today. To obtain a copy of the full decision, write to, call, or pick up in person from: Office of the Secretary, room 2215, Interstate Commerce Commission, 1201 Constitution Avenue, NW., Washington, DC 20423. Telephone: (202) 927–7428. [Assistance for the hearing impaired is available through TDD services: (202) 927–5721.]

Regulatory Flexibility

Because this is not a notice of proposed rulemaking within the meaning of the Regulatory Flexibility

Act (5 U.S.C. 601 *et seq.*), we need not conduct at this point an examination of impacts on small business. However, we welcome any comments regarding small entity considerations embodied in that Act.

Environmental and Energy Considerations

Issuing this notice will not significantly affect either the quality of the human environment or the conservation of energy resources because the notice merely seeks information and is not proposing any change in current rules or policy. We preliminarily conclude that, even if we subsequently decide to grant the relief sought by petitioners, an environmental assessment would not be necessary under our regulations because the proposed action would not result in changes in carrier operations that exceed the thresholds established in our regulations. See 49 CFR 1105.6(c)(2). We invite comments on the environmental and energy impacts of the proposal.

Authority: 49 U.S.C. 10321 and 10526, and 5 U.S.C. 553.

Decided: December 16, 1994.

By the Commission, Chairman McDonald, Vice Chairman Morgan, and Commissioners Simmons and Owen.

Vernon A. Williams,

Secretary.

[FR Doc. 95–317 Filed 1–5–95; 8:45 am]

BILLING CODE 7035–01–P–M

DEPARTMENT OF THE INTERIOR

Fish and Wildlife Service

50 CFR Part 17

Endangered and Threatened Wildlife and Plants; Reopening of Comment Period and Public Hearings on Proposed Rule to List the Arkansas River Basin Population of the Arkansas River Shiner as Endangered

AGENCY: Fish and Wildlife Service, Interior.

ACTION: Proposed rule; notice of public hearings and reopening of comment period.

SUMMARY: The Fish and Wildlife Service (Service) gives notice that three public hearings will be held on its proposal to list the Arkansas River Basin population of the Arkansas River shiner (*Notropis girardi*) as an endangered species. The Service proposed endangered status pursuant to the Endangered Species Act (Act) of 1973, as amended (16 U.S.C. 1531 *et seq.*), for the Arkansas River Basin population of the Arkansas River shiner on August 3, 1994 (59 FR 39532). These hearings will allow additional comments on this proposal to be submitted from all interested parties.

DATES: The comment period on the proposal is reopened from January 6 through February 3, 1995. The public hearings will be held from 7 to 9:30 p.m. on January 23, 1995, in Meade, Kansas; from 7 to 9:30 p.m. on January 24, 1995, in Woodward, Oklahoma; and from 7 to 9:30 p.m. on January 25, 1995, in Amarillo, Texas.

ADDRESSES: The January 23rd hearing will be held in the auditorium of Meade High School, 407 School Addition, Meade, Kansas; the January 24th hearing will be held in the seminar room of the High Plains Institute of Technology, 3921 34th Street, Woodward, Oklahoma; and the January 25th hearing will be held in the auditorium of the Texas A&M Regional Research and Extension Center, 6500 Amarillo Boulevard West, Amarillo, Texas. Written comments and materials should be sent to State Supervisor, Ecological Services State Office, 222 South Houston, Suite A, Tulsa, Oklahoma 74127. Comments and materials received will be available for public inspection, by appointment, during normal business hours at the above office address.

FOR FURTHER INFORMATION CONTACT: Ken Collins at the above office address (918/581–7458).

SUPPLEMENTARY INFORMATION:

Background

Section 4(b)(5)(E) of the Act requires that a public hearing be held on the proposal to list the Arkansas River Basin population of the Arkansas River shiner as an endangered species, if requested within 45 days of the proposal's publication in the **Federal Register**. Public hearing requests were received during the allotted time period from parties in Kansas, Oklahoma, and Texas.

Anyone expecting to make an oral presentation at these hearings is encouraged to provide a written copy of their statement to the hearing officer prior to the start of the hearing. In the event there is a large attendance, the time allotted for oral statements may have to be limited. Oral and written statements receive equal consideration. There are no limits to the length of written comments presented at these hearings or mailed to the Service.

In order to accommodate the presently scheduled public hearings, the Service extends the public comment period. Written comments may be submitted from January 6, 1995 through February 3, 1995, to the State Supervisor (see **ADDRESSES** above).

Author

The primary author of this document is Ken Collins (see **ADDRESSES** above).

Authority

The authority for this action is the Endangered Species Act (16 U.S.C. 1531 *et seq.*)

Dated: December 23, 1994.

John G. Rogers,

Regional Director, Fish and Wildlife Service.

[FR Doc. 95–305 Filed 1–5–95; 8:45 am]

BILLING CODE 4310–55–P

DEPARTMENT OF COMMERCE

National Oceanic and Atmospheric Administration

[I.D. 122294A]

50 CFR Part 227

Listing Endangered and Threatened Species; Shortnose Sturgeon in the Kennebec River System (Maine)

AGENCY: National Marine Fisheries Service (NMFS), National Oceanic and Atmospheric Administration (NOAA), Commerce.

ACTION: Notice of petition finding, initiation of status review; request for comments.

SUMMARY: NMFS finds that a petition to remove the shortnose sturgeon (*Acipenser brevirostrum*) population in the Kennebec River system (Androscoggin, Kennebec and Sheepscot Rivers) from the Endangered Species List presents substantial information indicating that the requested action may be warranted. Therefore, NMFS is initiating a status review on the stock to determine if delisting is warranted. To ensure that this status review is complete, NMFS is soliciting information and data regarding the petitioned stock of shortnose sturgeon.

DATES: Comments and information must be received by March 7, 1995.

ADDRESSES: Copies of the petition are available from, and information should be submitted to, Chief, Habitat and Protected Resources Division, NMFS, One Blackburn Drive, Gloucester, MA 01930–2298.

FOR FURTHER INFORMATION CONTACT: Nancy Haley, NMFS, Northeast Region (413–253–8616); Douglas W. Beach, NMFS, Northeast Region (508–281–9254); or Margaret Lorenz, NMFS, Office of Protected Resources (301–713–1401).

SUPPLEMENTARY INFORMATION:

Background

Section 4 of the Endangered Species Act (ESA) allows interested persons to petition the Secretary of Commerce or the Secretary of Interior to add, remove or reclassify a species on the List of Endangered and Threatened Wildlife and to designate critical habitat. To the maximum extent practicable, the Secretary must make a finding within 90 days after receiving the petition on whether it presents substantial scientific or commercial information to indicate that the petitioned action may be warranted. A final decision on the petitioned action must be made within one year of receipt of the petition.

Petition Received

On September 19, 1994, NMFS received a petition from the Edwards Manufacturing Company, Inc. to delist the shortnose sturgeon population in the Kennebec River system in Kennebec, Sagadahoc and Lincoln Counties, Maine. In support of their requested action, the petitioners cite research conducted on the Kennebec River system population over the last two decades and an initial population estimate averaging 10,000 adult shortnose sturgeon. Additionally, density data (shortnose sturgeon per hectare) reported from six river populations, including the Kennebec River system, is used to infer that the Kennebec River system is supporting a shortnose sturgeon population near carrying capacity.

Further, the petitioners reference a NMFS 1987 Status Review that states that the Kennebec River shortnose sturgeon population is no longer in danger of extinction and recommends that the population be removed from the list of threatened and endangered species under the ESA. This recommendation was based on the best information available at that time, and considered all of the listing/delisting factors specified in the ESA.

Using the best available information, NMFS will assess the status of the shortnose sturgeon throughout its range, including the Kennebec River system. In making a final determination on whether the petitioned action is warranted, NMFS will consult the shortnose sturgeon recovery team and other sturgeon biology and population dynamics experts and will verify the findings and recommendations contained in this petition and the NMFS 1987 status review.

Information Solicited

To ensure that the review is complete and based on the best available scientific and commercial data, NMFS is soliciting from any interested person information concerning the status of shortnose sturgeon in the Kennebec River system. Data, information and comments should include (1) supporting documentation such as sighting dates and locations (preferably accompanied by maps) and (2) the commentors name, address, and association, institution, or business.

Dated: December 29, 1994.

Ann D. Terbush,

Acting Director, Office of Protected Resources, National Marine Fisheries Service.

[FR Doc. 95–275 Filed 1–5–95; 8:45 am]

BILLING CODE 3510–22–F

---

50 CFR Part 678

[Docket No. 941261–4361; I.D. 121494A]

RIN 0648–AF63

Atlantic Shark Fisheries; Quotas

AGENCY: National Marine Fisheries Service (NMFS), National Oceanic and Atmospheric Administration (NOAA), Commerce.

ACTION: Proposed rule; request for comments.

SUMMARY: NMFS issues this proposed rule which would establish the semiannual commercial quotas for Atlantic large coastal sharks, and Atlantic pelagic sharks, under the framework provisions of the Fishery Management Plan for Sharks of the Atlantic Ocean (FMP), at 1994 levels. These quotas would apply to permitted vessels for 1995 and, unless adjusted, for future years. This proposed rule is intended to prevent overfishing of shark stocks.

DATES: Written comments on this proposed rule are invited and must be received on or before January 30, 1995.

ADDRESSES: Comments on the proposed rule should be sent to Richard B. Stone, Chief, Highly Migratory Species Management Division, Office of Fisheries Conservation and Management (F/CM), National Marine Fisheries Service, 1315 East-West Highway, Silver Spring, MD 20910. Clearly indicate ''Atlantic Shark Comments'' on the envelope. Comments may also be sent by FAX to 301–713–0596. Requests for copies of an environmental assessment and regulatory impact review (EA/RIR) should be sent to Richard B. Stone or C. Michael Bailey at the same address.

FOR FURTHER INFORMATION CONTACT: C. Michael Bailey, 301–713–2347, FAX 301–713–0596; Michael E. Justen, 813–570–5305 or Kevin B. Foster, 508–281–9260.

SUPPLEMENTARY INFORMATION: The fishery for Atlantic sharks is managed under the FMP prepared by NMFS under authority of Section 304(f)(3) of the Magnuson Fishery Conservation and Management Act (Magnuson Act), and implemented in April 1993 through regulations found at 50 CFR part 678.

In October and November 1994, NMFS held a series of public scoping meetings to receive comments from fishery participants and other members of the public regarding issues of concern in the Atlantic shark fishery. In addition, NMFS solicited written comments as part of the scoping process, including consideration of adjustments to the quota for Atlantic large coastal and pelagic sharks.

The 1994 Atlantic Large Coastal Shark Fishery

The January-through-June semiannual quota was projected to be reached on May 17 and the fishery was closed; however, the quota was actually underharvested by 33 mt. The quota for July through December was adjusted for the underharvest for a total of 1318 mt. The commercial large coastal shark fishery was closed August 10 based on projected landings, but the quota was underharvested by 657 mt due to bad weather and other factors in the two weeks prior to August 10. The fishery reopened on September 1 to allow the underharvest to be taken and was closed on November 5, 1994.

The 1994 Evaluation of TAC

During preparation of the FMP, NMFS determined that stocks of Atlantic large coastal sharks were below the level required to produce the maximum sustainable yield (MSY). Accordingly, NMFS included a Recovery Plan in the FMP designed to rebuild the resource to the MSY level, with annual total allowable catch (TAC) increasing as the rebuilding program progressed. However, because MSY, stock levels needed to produce MSY, and resource productivity were only uncertain estimates, the FMP calls for an annual evaluation of relevant fishery information including current stock status, current landings, maximum sustainable yield, and information on which to base TAC.

As required by the FMP, an annual shark evaluation workshop (SEW) was held in March 1994 to assess the status of the stocks. The SEW concluded that available information neither supported

the increase for the 1994 TAC from 1993 levels nor supported increasing the 1995 TAC as was otherwise anticipated and scheduled in the FMP. Three significant factors were found to alter previous perceptions of the status of large coastal sharks: (1) Catch per unit effort (CPUE) statistics extending further back in time than were used to prepare the FMP, indicating that the resource has declined further than previously estimated; (2) new estimates of life history characteristics such as age at maturity and maximum longevity indicating that the productivity of some key species may be much lower than previously assumed; and (3) updated CPUE statistics giving no indication of rebuilding to date.

CPUE data since 1991 are too few and too variable to indicate with any statistical confidence whether stocks are increasing or decreasing under current TAC levels. However, other information (stock sizes substantially below MSY levels, low productivity, and increased landings prior to implementation of the FMP) suggests that the rapid recovery assumed in the FMP is unlikely. The 1994 SEW suggested that recovery to the levels of the 1970's could take as long as 30 years. Given the reproductive profiles of sharks and the general insufficiency of fishery data upon which to base analyses, the 1994 SEW concluded that ''increas[ing] the TAC for sharks [is] considered risk-prone with respect to promoting stock recovery'' and that allowing ''any TAC might be considered risk-prone * * *.'' The SEW recommended that the 1995 quota be set at 1993 levels.

Shark Operations Team

The Shark Operations Team met to review the findings of the SEW with the individual members supporting maintaining quotas at 1994 levels.

Large Coastal and Pelagic Shark Quotas

The framework provisions of the FMP allow the Assistant Administrator for Fisheries, NOAA (AA), to make adjustments in the management measures in order to achieve the objectives of the FMP.

The AA proposes to set the commercial quota for the large coastals group for 1995 at the 1994 level—2,570 mt. This, in the opinion of the AA, represents a reasonable compromise between the various alternatives ranging from a complete closure of the fishery to a quota increase. This alternative conforms to the objectives of the shark FMP in that it facilitates shark resource data collection, research, and monitoring and increases the benefits from shark resources to the United States while reducing waste.

While the 1994 SEW focused on the large coastal species group, declining CPUE and life history characteristics indicating low productivity for pelagics and small coastals also suggest that a prudent approach is warranted for these groups. No new analyses were presented upon which to modify MSY or TAC of the pelagic and small coastal sharks. Accordingly, the AA proposes to set commercial quotas for pelagic sharks for 1995 at the 1994 level—580 mt. At present, no quota has been established for the small coastal species group. When analyses are presented, the AA will propose an appropriate quota for small coastal sharks.

NMFS is also proposing to remove the specification of the year from portions of the regulatory text referring to quotas. Thus, if a change in quota level from a previous year is not justified, a change in the regulatory text would not be necessary to continue that level for the new year.

Comments and Responses

Agency responses to comments received during the scoping process are summarized below.

Commercial Quotas

Comment: Conservation organizations, commercial shark fishing interests, incidental commercial shark fishing interests, recreational fishing interests, and individuals provided written comments on the proposed adjustment to commercial quotas. Some commenters suggested that commercial quotas should be allowed to increase as scheduled in the FMP, some commenters suggested maintaining the current quota until additional data on the status of the stocks could be evaluated, some commenters suggested significant quota reductions, and others suggested a closure of the fishery until stocks recover.

Response: NMFS has examined the four possible commercial quota options and, as is discussed above, is proposing to set the TAC for 1995 at the 1994 level. An SEW will be held in 1995 to reexamine the status of the stocks and to recommend any adjustments for 1996.

Other Comments

Comment: NMFS received a number of other comments during the scoping process, including species identification concerns, possible creation of a new sub-grouping of fast growing large coastal sharks that share similar life histories, medium- and long-term measures to address the rapid expansion in the number of permit holders (e.g., moratorium and individual quotas), tiered permit system (e.g. directed, bycatch, and angler catch), further division of the quota into 4 periods in lieu of the existing 2 periods, regional sub-quotas for large coastal sharks, area/season closures for sharks (e.g., nursery/pupping grounds), modifications in the fin/carcass ratio, and changes in the recreational fishery bag limit.

Response: This proposed rule addresses only the commercial quotas for large coastal and pelagic sharks. This is immediately necessary because specification of commercial quotas expires as of December 31, 1994. However, other issues raised in the scoping process may be addressed in future rulemakings.

Classification

The AA has determined that this rule is necessary for conservation and management of shark resources in the Atlantic Ocean and is consistent with the national standards and other provisions of the Magnuson Act, and other applicable law. This proposed rule is exempt from review under E.O. 12866. The quotas proposed for 1995 are within the range analyzed in the Regulatory Flexibility Analysis (RFA) included in the Regulatory Impact Review prepared for the FMP and no new RFA has been prepared.

List of Subjects in 50 CFR Part 678

Fisheries, Fishing, Reporting and recordkeeping requirements.

Dated: December 29, 1994.

Gary Matlock,

Program Management Officer, National Marine Fisheries Service.

For the reasons set out in the preamble, 50 CFR part 678 is proposed to be amended as follows:

PART 678—ATLANTIC SHARKS

1. The authority citation for part 678 continues to read as follows:

Authority: 16 U.S.C. 1801 *et seq.*

2. Section 678.24, paragraph (b), is revised to read as follows:

§ 678.24 Commercial quotas.

* * * * *

(b) *Semiannual quotas*. The following commercial quotas apply:

(1) For the period January 1 through June 30:

(i) Large coastal species—1,285 metric tons, dressed weight.

(ii) Pelagic species—290 metric tons, dressed weight.

(2) For the period July 1 through December 31:

(i) Large coastal species—1,285 metric tons, dressed weight.

(ii) Pelagic species—290 metric tons, dressed weight.

* * * * *

[FR Doc. 94–32343 Filed 12–30–94; 3:34 pm]

BILLING CODE 3510–22–F

Notices

Federal Register

Vol. 60, No. 4

Friday, January 6, 1995

This section of the FEDERAL REGISTER contains documents other than rules or proposed rules that are applicable to the public. Notices of hearings and investigations, committee meetings, agency decisions and rulings, delegations of authority, filing of petitions and applications and agency statements of organization and functions are examples of documents appearing in this section.

DEPARTMENT OF AGRICULTURE

Office of the Secretary

Meat Import Limitations

First Quarterly Estimate

The Meat Import Act of 1979, as amended (19 U.S.C. 2253 note) (the ''Act''), provides for limiting the quantity of fresh, chilled, or frozen meat of bovine, sheep (except lamb), and goats; and processed meat of beef or veal (Harmonized Tariff Schedule of the United States subheadings 0201.10.00, 0201.20.20, 0201.20.40, 0201.20.60, 0201.30.20, 0201.30.40, 0201.30.60, 0202.10.00, 0202.20.20, 0202.20.40, 0202.20.60, 0202.30.20, 0202.30.40, 0202.30.60, 0204.21.00, 0204.22.40, 0204.23.40, 0204.41.00, 0204.42.40, 0204.43.40, and 0204.50.00), other than products of Canada and Mexico, which may be imported into the United States in any calendar year. Such limitations are to be imposed when the Secretary of Agriculture estimates that imports of articles, other than products of Canada and Mexico, provided for in Harmonized Tariff Schedule of the United States subheadings 0201.10.00, 0201.20.40, 0201.20.60, 0201.30.40, 0201.30.60, 0202.10.00, 0202.20.40, 0202.20.60, 0202.30.40, 0202.30.60, 0204.21.00, 0204.22.40, 0204.23.40, 0204.41.00, 0204.42.40, 0204.43.40, and 0204.50.00 (hereinafter referred to as ''meat articles''), in the absence of limitations under the Act during such calendar year, would equal or exceed 110 percent of the estimated aggregate quantity of meat articles prescribed for calendar year 1995 by section 2(c) as adjusted under section 2(d) of the Act.

In accordance with the requirements of the Act, I have made the following estimates:

1. The estimated aggregate quantity of meat articles prescribed by subsection 2(c) as adjusted by subsection 2(d) of the Act for calendar year 1995 is 1,152.6 million pounds.

2. The first quarterly estimate of the aggregate quantity of meat articles which would, in the absence of limitations under the Act, be imported during calendar year 1995 is 1,250 million pounds.

Done at Washington, DC, this 27th day of December 1994.

Mike Espy,

Secretary of Agriculture.

[FR Doc. 95–266 Filed 1–5–95; 8:45 am]

BILLING CODE 3410–10–M

Consolidated Farm Service Agency

National Conservation Review Group; Meeting

AGENCY: Consolidated Farm Service Agency, USDA.

ACTION: Notice of meeting.

SUMMARY: The National Conservation Review Group will meet to consider recommendations from State and County Conservation Review Groups with respect to the operational features of the Agricultural Conservation Program (ACP), the Emergency Conservation Program (ECP), the Forestry Incentives Program (FIP) and the Water Bank Program (WBP). Comments and suggestions will be received from the public concerning the ACP and ECP administered by the Consolidated Farm Service Agency (CFSA) and the FIP and WBP administered by the Natural Resources Conservation Service (NRCS).

DATES: The meeting is scheduled for February 2, 1995.

ADDRESSES: The meeting will be held at United States Department of Agriculture (USDA), South Building, room 4960, at 14th and Independence Avenue, SW., Washington, DC.

FOR FURTHER INFORMATION CONTACT: Diane Sharp, CFSA, USDA, P.O. Box 2415, room 4768, South Building, Washington, DC, 20013–2415, telephone 202–720–7333.

SUPPLEMENTARY INFORMATION: The National Conservation Review Group meeting is scheduled to be held from 9 a.m. to 4 p.m. on February 2, 1995, at the USDA South Building, room 4960, 14th and Independence Avenue, SW., Washington, DC. Meeting sessions will be open to the public.

The agenda will include consideration of State and County Review Group recommendations for changes in the administrative procedures and policy guidelines of the ACP, ECP, FIP, and WBP. An opportunity will be provided for the public to present comments at the meeting on these conservation and environmental programs administered by CFSA and NRCS.

Because of time constraints and anticipated participation from interested individuals and groups, comments will be limited to not more than 5 minutes. Individuals or groups interested in making recommendations may also make them in writing and submit them to Diane Sharp, CFSA, USDA, P.O. Box 2415, room 4768–S, Washington, DC 20013–2415. The meeting may also include discussion of current procedures, criteria, and guidelines relevant to the implementation of these programs.

Because of limited space, persons desiring to attend the meeting should call Diane Sharp at 202–720–7333 to make reservations.

Signed at Washington, DC, on December 29, 1994.

Bruce R. Weber,

Acting Administrator, Consolidated Farm Service Agency.

[FR Doc. 95–344 Filed 1–5–95; 8:45 am]

BILLING CODE 3410–05–P

Forest Service

Swan Lake-Lake Tyee Intertie Transmission Line

AGENCY: Forest Service, Department of Agriculture.

ACTION: Notice of Intent to prepare an Environmental Impact Statement.

SUMMARY: Ketchikan Public Utilities proposes to build and operate a 115 kV electric transmission line in Southeast Alaska between the switchyard of the Swan Lake Hydroelectric Station on Revillagigedo Island and the switchyard at the Lake Tyee Hydroelectric Station the Alaska mainland. The proposed new line would be a single-circuit 115 kV line having three conductors and no shield wire. The proposed action would intertie the electrical systems of Ketchikan Public Utilities, Petersburg Municipal Power and Light, and Wrangell Municipal Light and Power.

The proposed intertie would lie within a corridor identified during an earlier feasibility study as the ''preferred site'' of the transmission line. The corridor is approximately 57 miles long and one mile wide and lies almost entirely on National Forest System land (Tongass National Forest) administered by the U.S. Forest Service. The corridor follows lower elevations to minimize visual impacts, avoid steep and unstable areas, and avoid extreme weather conditions. A 200-foot-wide right-of-way would be cleared for the transmission line. The line would require long aerial crossings at Eagle Bay, Bell Arm, the Behm Canal, and Shrimp Bay with span lengths of approximately 2,000, 1,200, 4,000, and 2,000 feet, respectively. There are variations of portions of the preferred route in the vicinity of Orchard Lake, Behm Canal, and Eagle Lake and River.

DATES: Comments concerning the scope of this project should be received by March 7, 1995. Public scoping meetings are scheduled during this comment period in Ketchikan, Wrangell, Petersburg, and Juneau. The location and time of the meetings will be announced in the local media.

ADDRESSES: Send written comments and suggestions concerning the scope of this project to Linn W. Shipley, Acting District Ranger, Tongass National Forest, Ketchikan Ranger District, Attn: Swan Lake-Lake Tyee EIS, 3031 Tongass Avenue, Ketchikan, AK 99901.

FOR FURTHER INFORMATION CONTACT: Questions about the proposal and the EIS should be directed to Becky Cross, EIS Liaison, Tongass National Forest, Ketchikan Ranger District, 3031 Tongass Avenue, Ketchikan, Alaska 99901, Telephone (907) 225–2148.

SUPPLEMENTARY INFORMATION: Possible variations to the basic transmission line intertie include construction and use of an access road to serve the majority of the line from Eagle Bay to Carroll Inlet. The access road would not connect with any existing road and would not provide access between the project area and Ketchikan or another urban area. In addition to construction access, the road is intended to provide maintenance access to the transmission line. To the extent feasible, some portions of the road would follow the transmission line right-of-way for direct access to clearing and construction operations. The assumed road specifications are: a maximum grade of about 10 percent; a curve radius of about 100 feet; a shotrock surface about 14 feet wide and 24 to 30 inches deep; corrugated metal pipe culverts or small bridges to cross permanent and intermittently flowing stream channels; and incorporation of any nearby logging roads or other vehicular trails into the access road where feasible.

An alternative to aerial crossings of large water bodies is use of submarine crossings of Bell Arm, the Behm Canal, and Shrimp Bay. The aerial conductors would connect to a terminal station or structure on the shore near the water body and continue as self-contained fluid-filled or dielectric cables underwater to the opposite shore, where they would pass through a terminal station to continue as aerial conductors.

To meet Ketchikan's energy needs, other alternatives which may be considered could include development of new power generation in the Ketchikan area and electrical load conservation measures. Finally, a no action alternative will be considered.

The EIS will be prepared under Council on Environmental Quality (CEQ) regulations governing third party contracts. Ketchikan Public Utilities, the project proponent, has contracted with Foster Wheeler Environmental Corporation, an environmental consulting firm based in Washington State, to conduct the field studies and environmental analyses, direct public involvement activities, and prepare the EIS for the project. The third party is the Forest Service, which will be the lead agency and which also is the deciding and permitting agency for the proposal. Linn Shipley, the Acting District Ranger of the Ketchikan Ranger District, must decide whether to issue a Special Use Permit to Ketchikan Public Utilities permitting the intertie to cross the Tongass National Forest. Foster Wheeler Environmental will be responsible to the Forest Service for preparing an EIS that meets NEPA regulations and Forest Service procedures.

Public participation will be an integral component of the study process and will be especially important at several junctures of the analysis. The first is during the scoping process. The Forest Service is seeking information, comments, and assistance from Federal, State, and local agencies, individuals, and organizations that may be interested in, or affected by, the proposed activities. The objectives of the scoping process are to (1) identify the affected public and agency concerns, and level of concern, (2) define the issues and alternatives that will be examined in detail in the EIS, (3) eliminate insignificant issues, and (4) identify analysis needs. In addition to the scoping meetings mentioned above, written scoping comments are being solicited through a scoping package that will be sent to those on the project mailing list. For the Forest Service to best use the scoping input, comments should be received within 60 days of the publication of this Notice in the **Federal Register** . The following preliminary issues have been identified:

1. Will construction-related air emissions affect the air quality of the study area and Misty Fiords National Monument and Wilderness?
2. Will right-of-way clearing and road construction affect karst and cave resources?
3. Will activities associated with right-of-way clearing and road construction degrade fish habitat?
4. What are the possibilities for changing steam flow and creating barriers to fish migration?
5. What will be the effect of clearing wetland and riparian areas for the right-of-way and of encroachment and modification of floodplains and estuarine areas?
6. What are the implications of the proposed action on timber production and sensitive and rare plant species?
7. What are the potential effects of right-of-way clearing on windthrow?
8. How will the right-of-way clearing affect wildlife habitat, biodiversity, Habitat Conservation Areas, and rare and endangered species?
9. Will wildlife species used for subsistence harvest be affected by the transmission line and access road? If so, how? Will this affect subsistence lifestyles?
10. To what degree will the transmission line and access road affect the visual quality of key viewing areas, particularly at Orchard Lake and Eagle Lake, which have been mentioned as potential additions to the Wild and Scenic Rivers system?
11. To what degree will the transmission line and access road change the quality and type of recreation opportunities?
12. What are the economic implications for the cities of Wrangell and Petersburg?

Based on the results of scoping and agency consultation, alternatives to the proposed action, including a ''no action'' alternative, will be developed for the Draft Environmental Impact Statement (DEIS).

A series of five public workshops will be held upon completion of the Preliminary Draft EIS. These workshops will be informal sessions designed to explain to the public the study process and preliminary findings, answer questions, and highlight any problems that might need resolving before issuing the DEIS. Their location, date, and time will be announced in the local media.

The DEIS is projected to be filed with the Environmental Protection Agency in February 1996. Public comment on the DEIS will be solicited for a minimum of 45 days from the date the Notice of Availability appears in the Federal Register. Subsistence hearings, as required by Section 8 of the Alaska National Interest Lands Conservation Act, are planned during this 45-day comment period.

The Forest Service believes, at this early stage, it is important to give reviewers notice of several court rulings related to public participation in the environmental review process. First, reviewers of DEIS's must structure their participation in the environmental review of the proposal so that it is meaningful and alerts an agency to the reviewer's position and contentions. *Vermont Yankee Nuclear Power Corp. v. NRDC,* 435 U.S. 519 553 (1978). Also, environmental objections that could be raised at the DEIS stage but that are not raised until after completion of the final EIS may be waived or dismissed by the courts. *City of Angoon v. Hodel,* 803 F.2d 1016, 1022 (9th Cir. 1986) and *Wisconsin Heritages, Inc. v. Harris,* 490 F. Suppl. 1334, 1338 (E.D. Wis. 1980). Because of these court rulings, it is very important that those interested in this proposed action participate by the close of the 45-day comment period so that substantive comments and objections are made available to the Forest Service at a time when it can meaningfully consider them and respond to them in the final EIS.

To assist the Forest Service in identifying and considering issues and concerns on the proposed action, comments on the DEIS should be as specific as possible. It is also helpful if comments refer to specific pages or chapters of the draft statement. Comments may also address the adequacy of the DEIS or the merits of the alternatives formulated and discussed in the statement. Reviewers may wish to refer to the Council on Environmental Quality regulations for implementing the procedural provisions of the National Environmental Policy Act at 40 CFR 1503.3 in addressing these points.

Issuance of the Final Environmental Impact Statement is projected in November 1996. The responsible official for the decision is Linn Shipley, Acting District Ranger, Tongass National Forest, Ketchikan Ranger District, 3031 Tongass Avenue, Ketchikan, AK 99901.

Permits

Permits required for construction of the transmission line may include the following:

Federal

U.S. Forest Service

- Special use permit
- Permit for surveying the right-of-way

U.S. Army Corps of Engineers

- Approval of the discharge of dredged or fill materials into waters of the United States under Section 404 of the Clean Water Act
- Approval of the construction of structures or work in navigable waters of the United States under Section 10 of the Rivers and Harbors Act of 1899.

U.S. Federal Aviation Administration

- Notice of proposed construction

State

Alaska Department of Environmental Conservation

- Certificate of Reasonable Assurance regarding discharge of dredged or fill materials into waters of the United States
- Prevention of Significant Deterioration permit for the exhaust of any fossil-fuel-burning equipment used during construction
- Open-burn permit for waste burning
- Solid waste disposal permit

Alaska Department of Fish and Game

- Habitat Protection Permits when streams are to be crossed and when other wildlife habitats are affected
- Title 16 Fish Habitat permit for disturbing anadromous fish streams

Alaska Department of Natural Resources

- Tideland lease for structures below mean high water line
- Easement for crossing Alaska State uplands
- Permit required if more than 500 gallons per day is withdrawn from any stream
- Permits required for log transfers facilities

Dated: December 28, 1994.

David D. Rittenhouse,

Forest Supervisor.

[FR Doc. 95–280 Filed 1–5–95; 8:45 am]

BILLING CODE 3410–11–M

DEPARTMENT OF COMMERCE

International Trade Administration

[A–428–602]

Brass Sheet and Strip From Germany; Preliminary Results of Antidumping Duty Administrative Reviews

AGENCY: Import Administration, International Trade Administration, Department of Commerce.

ACTION: Notice of preliminary results of antidumping duty administrative reviews.

SUMMARY: The Department of Commerce (the Department) has conducted administrative reviews of the antidumping duty order on brass sheet and strip from Germany. The reviews cover one manufacturer/exporter of this merchandise to the United States, Wieland Werke AG (Wieland). The periods covered are March 1, 1990 through February 28, 1991, March 1, 1991 through February 29, 1992, and March 1, 1992 through February 28, 1993. The reviews indicate the existence of dumping margins for these periods.

As result of these reviews, the Department has preliminarily determined to assess antidumping duties equal to the differences between United States price (USP) and foreign market value (FMV). We invite interested parties to comment on these preliminary results.

EFFECTIVE DATE: January 6, 1995.

FOR FURTHER INFORMATION CONTACT: Thomas Killiam, Chip Hayes, or John Kugelman, Office of Antidumping Compliance, Import Administration, International Trade Administration, U.S. Department of Commerce, 14th Street and Constitution Avenue, NW., Washington, DC 20230; telephone: (202) 482–5253.

SUPPLEMENTARY INFORMATION:

Background

On March 6, 1987, the Department published in the **Federal Register** (52 FR 6997) the antidumping duty order on brass sheet and strip from Germany. Based on timely requests for review, in accordance with 19 CFR 353.22(c), we initiated administrative reviews of Wieland on March 8, 1991 (56 FR 9937), March 5, 1992, (57 FR 7910) and on March 12, 1993 (58 FR 13584) for the 1990–1991, 1991–1992, and 1992–1993 periods of review (POR's) respectively. The Department is now conducting these administrative reviews in accordance with section 751 of the Tariff Act of 1930, as amended (the Act).

Scope of the Review

Imports covered by these reviews are brass sheet and strip, other than leaded and tin brass sheet and strip, from Germany. The chemical composition of the products under review is currently defined in the Copper Development Association (C.D.A.) 200 Series or the Unified Numbering System (U.N.S.) C20000 series. These reviews do not cover products the chemical compositions of which are defined by other C.D.A. or U.N.S. series. The physical dimensions of the products covered by these reviews are brass sheet and strip of solid rectangular cross section over 0.006 inches (0.15 millimeters) through 0.188 inches (4.8 millimeters) in gauge, regardless of width. Coiled, wound-on-reels (traverse wound), and cut-to-length products are included. The merchandise is classified under Harmonized Tariff Schedule (HTS) item numbers 7409.21.00 and 7409.29.20. The HTS item numbers are provided for convenience and customs purposes. The written description remains dispositive.

These reviews cover one manufacturer/exporter, Wieland. The POR's are March 1, 1990 through February 28, 1991, March 1, 1991 through February 29, 1992, and March 1, 1992 through February 28, 1993.

United States Price

We based USP on purchase price (PP) and exporter's sales price (ESP), as appropriate, in accordance with section 772 of the Act. We calculated PP and ESP based on C.I.F., duty-paid prices, delivered either to independent U.S. warehouses or to the customers' premises. In accordance with section 772(d)(2) of the Act, we made deductions for movement expenses and customs duty.

For ESP transactions, we also made deductions for U.S. movement expenses, direct selling expenses, commissions, where appropriate, and indirect selling expenses.

We adjusted USP for taxes in accordance with our practice as outlined in Siliconmanganese From Venezuela; Preliminary Determination of Sales at Less than Fair Value, 59 FR 31204 (June 17, 1994) (Siliconmanganese).

No other adjustments were claimed or allowed.

Foreign Market Value

Based on a comparison of the volume of home market and third country sales, we determined that the home market was viable. Therefore, in accordance with section 773 of the Act, we compared U.S. sales with sales of such or similar merchandise in the home market.

We calculated FMV using monthly weighted-average prices of sales of brass sheet and strip having the same characteristics as to alloy, gauge, width, temper, form, and coating. The gauge and width groupings are the same as those used in prior reviews. The model-match methodology in these reviews was the same as that used in the last administrative review (August 22, 1986 through February 29, 1988), except the Department included alloy-specific information for each transaction, instead of assigning sales into one of two alloy grade groups having above or below 70% copper content. This added specificity brings the model-match methodology into conformance with other orders on brass sheet and strip.

On January 5, 1994, the Court of Appeals for the Federal Circuit, in The Ad Hoc Committee of AZ–NM–TX–FL Producers of *Gray Portland Cement* v. *United States,* No. 93–1239, held that the Department could not deduct home market movement charges from FMV pursuant to its inherent power to fill in gaps in the antidumping statute. Accordingly, we now adjust for home market movement expenses under the circumstance-of-sale (COS) provision of 19 CFR 353.56 and the ESP offset provision of 19 CFR 353.56(b) (1) and (2), as appropriate. In these reviews, home market movement expenses were incurred between factory and customer, after the sale, and were therefore treated as direct COS deductions.

FMV was based on packed, delivered prices to unrelated customers in the home market, with appropriate deductions from the home market price for inland freight and insurance, credit expenses, home market packing, and rebates. We added U.S. packing to the home market price in accordance with section 773(a)(1) of the Act. For PP sales we added credit expenses to FMV, as a direct selling expense. For ESP sales we made adjustments to the home market price for indirect selling expenses, which we limited to the amount of indirect selling expenses in the United States, in accordance with 19 CFR 353.56(b)(2). In addition, we included in FMV the amount of value-added taxes collected in the home market in accordance with our practice as outlined in Siliconmanganese. We also made adjustments for differences in merchandise.

Wieland claimed that ''an adjustment should be made for the per unit differences in processing expenses associated with different order size.'' However, Wieland did not demonstrate to what extent these claimed adjustments affected price, or how they were related to the transactions under review. Accordingly, since we are not ''satisfied that the amount of any price differential is wholly or partly due to that difference in quantities,'' (19 CFR 353.55), we disallowed this claimed adjustment.

No other adjustments were claimed or allowed.

Cost Test

Because allegations by petitioners in the 1990–1991 administrative review provided the Department with reasonable grounds to believe or suspect that sales in that period had been made below cost, in accordance with section 773(b) of the Act, we investigated whether Wieland sold such or similar merchandise in the home market at prices below the cost of production (COP). In determining whether to disregard home market sales made at prices below the COP, we examined whether such sales were made in substantial quantities over an extended period of time, and whether such sales were made at prices which permitted recovery of all costs within a reasonable period of time in the normal course of trade.

COP was reported as the sum of costs for materials, labor, variable costs of manufacturing, factory overhead, selling and general expenses, net interest, and packing. In accordance with 19 CFR 353.51(c), we compared COP to home market prices net of discounts.

In accordance with our normal practice, when less than 10 percent of the home market sales of a model were at prices below the COP, we did not disregard any sales of that model. When 10 percent or more, but not more than 90 percent, of the home market sales of a particular model were determined to be below cost, we excluded the below-cost home market sales from our calculation of FMV, provided that these below-cost home market sales were made over an extended period of time. When more than 90 percent of the home market sales of a particular model were made below cost over an extended period of time, we disregarded all home market sales of that model in our calculation of FMV. See, for example, Mechanical Transfer Presses from Japan, Final Results of Antidumping Duty Administrative Review, 59 FR 9958.

To determine whether sales below cost had been made over an extended period of time, we compared the number of months in which sales below cost occurred for a particular model to the number of months in which that model was sold. If the model was sold

in fewer than three months, we did not disregard below-cost sales unless there were below-cost sales of that model in each month sold. If a model was sold in three or more months, we did not disregard below-cost sales unless there were sales below cost in at least three of the months in which the model was sold.

We compared individual home market prices with the monthly COP. We tested the home market prices on the basis of the six physical criteria used for product matches, and found that, for certain models, between 10 and 90 percent of home market sales were made at below-COP prices. Since the respondent provided no indication that these sales were at prices that would permit recovery of all costs within a reasonable period of time and in the normal course of trade, we disregarded the below-cost sales for those models, if those sales were made over an extended period of time. We used the remaining above-cost sales for comparison purposes.

For certain models, we used constructed value (CV) as the basis for FMV when there were no contemporaneous home market sales of such or similar merchandise.

We calculated CV in accordance with section 773(e) of the Act. We included the cost of materials, labor, and factory overhead in our calculations. The respondent reported selling, general, and administrative expenses (SG&A) greater than the statutory minimum of 10 percent of the cost of manufacture (COM). Therefore, we used the respondent's reported SG&A expenses. The respondent reported actual profit greater than the statutory minimum of eight percent of the sum of the COM and SG&A. Therefore, we used the respondent's reported profit amounts. We adjusted the CV for warranty and credit expenses, and the lesser of home market indirect selling expenses or U.S. commissions.

No other adjustments were claimed or allowed.

Preliminary Results of the Reviews

As a result of our comparison of USP to FMV, we preliminarily determine that the following dumping margins exist for the periods of review:

Review period	Manufacturer/exporter	Margin (Percent)
3/1/90–2/28/91	Wieland	3.33
3/1/91–2/29/92	Wieland	2.07
3/1/92–2/28/93	Wieland	0.36

Any interested party may request a hearing within 10 days of publication of this notice. Any hearing will be held 44 days after the date of publication or the first workday thereafter. Interested parties may submit case briefs within 30 days of the publication date of this notice. Rebuttal briefs, limited to issues raised in the case briefs, may be filed not later than 37 days after the date of publication. The Department will publish a notice of the final results of these administrative reviews, which will include the results of its analyses of issues raised in any such case briefs or hearing.

The following deposit requirements shall be effective for all shipments of the subject merchandise that are entered or withdrawn from warehouse for consumption on or after the publication date of the final results of these administrative reviews, as provided by section 751(a)(1) of the Act: (1) The cash deposit rates for the reviewed company shall be those rates established in the final results of these reviews; (2) for previously reviewed or investigated companies not listed above, the cash deposit rate will continue to be the company-specific rate published for the most recent period; (3) if the exporter is not a firm covered in these reviews, a prior review, or the original LTFV investigation, but the manufacturer is, the cash deposit rate shall be the rate established for the most recent period for the manufacturer of the merchandise; and (4) if neither the exporter nor the manufacturer is a firm covered in these or any previous reviews by the Department, the cash deposit rate will be 8.87%, the all others rate established in the LTFV investigation.

These deposit requirements, when imposed, shall remain in effect until publication of the final results of the next administrative review.

This notice serves as a preliminary reminder to importers of their responsibility under 19 CFR 353.26 to file a certificate regarding the reimbursement of antidumping duties prior to liquidation of the relevant entries during these review periods. Failure to comply with this requirement could result in the Secretary's presumption that reimbursement of antidumping duties occurred and the subsequent assessment of double antidumping duties.

These administrative reviews and this notice are in accordance with section 751(a)(1) of the Act (19 U.S.C. 1675(a)(1)) and 19 CFR 353.22.

Dated: December 23, 1994.

Susan G. Esserman,

Assistant Secretary for Import Administration

[FR Doc. 95–347 Filed 1–5–95; 8:45 am]

BILLING CODE 3510–DS–P

[A–549–809]

Notice of Preliminary Determination of Sales at Less Than Fair Value: Certain Carbon Steel Butt-Weld Pipe Fittings From Thailand

Correction

In notice document 94–24539 beginning on page 50568, in the issue of Tuesday, October 4, 1994, make the following corrections:

1. On page 50568, in the third column, under *Case History*, in the third paragraph, in the third line, ''Asahi'' should read ''Awaji.''

2. On page 50570, in the second column, under *Suspension of Liquidation*, after the second paragraph, under the heading ''Manufacturer/Producer/Exporter,'' ''Asahi'' should read ''Awaji.''

Dated: December 26, 1994.

Barbara R. Stafford,

Acting Assistant Secretary for Import Administration.

[FR Doc. 95–348 Filed 1–5–95; 8:45 am]

BILLING CODE 3510–DS–M

[A–570–820]

Certain Compact Ductile Iron Waterworks Fittings and Glands From the People's Republic of China: Notice of Court Decision; Exclusion From the Application of the Antidumping Duty Order, in Part; Termination of Administrative Review in Part; and Amended Final Determination and Order

AGENCY: Import Administration, International Trade Administration, Department of Commerce.

ACTION: Notice of amendment to final determination of sales at less-than-fair-value, exclusion from the application of the Antidumping Duty Order, and termination of administrative review in accordance with decision upon remand.

SUMMARY: On November 15, 1994, the United States Court of International Trade (CIT) affirmed the Department's September 30, 1994, remand determination which was not contested by defendant-intervenor, The U.S. Waterworks Fittings Producers Council, *et al.*; and entered Final Judgment with prejudice. See *China National Metal Products Import and Export Corporation*

and Sigma Corporation v. *United States et al.*, Slip Op. 94–178, Ct. No. 93–09–00655 (CIT September, 1993). The remand resulted in a finding of a de minimis margin for China National Metals Import and Export Corporation (CMP) and, consequently, a negative determination of sales at less than fair value for the investigation of CMP. Therefore, CMP, as an exporter of subject merchandise produced by Bin He Foundry and Song Zhuang Foundry, is excluded from the application of the antidumping duty order on compact ductile iron waterworks products from the People's Republic of China. Because CMP is excluded from the application of the antidumping duty order with respect to its sales of subject merchandise produced by Bin He Foundry and Song Zhuang Foundry, we are also terminating the on-going administrative review with respect to CMP as an exporter of subject merchandise produced by these two foundries. Because no parties to the Court proceeding contested the Department's Final Redetermination, we are not publishing a Timken notice, pursuant to *Timken* v. *United States*, 893 F.2d 337 CAFC (1990).

EFFECTIVE DATE: January 6, 1995.

FOR FURTHER INFORMATION CONTACT: Kate Johnson, Office of Antidumping Investigations, Import Administration, International Trade Administration, U.S. Department of Commerce, 14th Street and Constitution Avenue, NW., Washington, DC 20230; telephone (202) 482–4929.

SUPPLEMENTARY INFORMATION:

Background

On February 18, 1993, the Department published its Preliminary Determination of Sales at Less Than Fair Value: Certain Compact Ductile Iron Waterworks Fittings and Glands From the People's Republic of China (58 FR 8930) (CDIW). In that determination, the Department found CMP's weighted-average dumping margin to be 127.38 percent. Consequently, we instructed the U.S. Customs Service to suspend liquidation of all entries of the subject merchandise exported by CMP entered into U.S. Customs territory on or after February 18, 1993, the date of publication of the preliminary determination in the **Federal Register**. In the final determination, the Department found CMP's weighted-average dumping margin to be 127.38 percent. See Final Determination of Sales at Less Than Fair Value: Compact Ductile Iron Waterworks Fittings and Glands from the People's Republic of China, 58 FR 37908 (July 14, 1993). In CDIW the Department determined that, in a nonmarket economy, ownership of an enterprise by the government provides the opportunity for the government to control the export activities of the enterprise. Given this potential to manipulate export pricing decisions, the Department determined that enterprises which were state-owned, *i.e.*, ''owned by all the people,'' such as CMP, were ineligible for separate rates (58 FR at 37909). On September 7, 1993, the Department published an antidumping duty order in this proceeding. See Antidumping Duty Order: Certain Compact Ductile Iron Waterworks Fittings and Glands From the People's Republic of China, 58 FR 47117 (September 7, 1993).

On September 30, 1993, CMP and importer Sigma Corporation instituted an action at the CIT challenging, along with other findings, the Department's denial of a separate rate for CMP in the final less-than-fair-value determination. On May 27, 1994, all parties joined in a consent motion to the Court to remand the case to the Department, and on June 2, 1994, the Court issued its remand order. Pursuant to the Court's remand order, on September 30, 1994, the Department presented to the Court the Final Redetermination of Voluntary Remand in Compact Ductile Iron Waterworks Fittings and Glands from the People's Republic of China.

In the final redetermination, the Department reconsidered the issue of whether or not CMP, as an exporter of subject merchandise produced by Bin He Foundry and Song Zhuang Foundry, was entitled to a separate dumping margin in light of the Department's recent decision in the Final Determination of Sales at Less than Fair Value: Silicon Carbide from the People's Republic of China, (59 FR 22585, May 2, 1994) (Silicon Carbide). In Silicon Carbide, the Department modified the separate rates policy enunciated in CDIW, and evaluated whether enterprises ''owned by all the people'' could receive separate rates based upon evidence submitted demonstrating that reforms by the central government had devolved control over enterprises owned by all the people. Based on that evidence and analysis, the Department determined that ''ownership by all the people'' does not necessarily mean that an enterprise is controlled by the government, and therefore, such an enterprise may qualify for a separate rate.

In the final redetermination of CDIW to determine whether CMP, an enterprise ''owned by all the people,'' was entitled to receive a separate rate, the Department used the criteria developed in the Final Determination of Sales at Less Than Fair Value: Sparklers from the People's Republic of China (56 FR 20588, May 6, 1991) (Sparklers) as amplified in Silicon Carbide. Under the separate rates criteria, the Department assigns a separate rate only when an exporter can demonstrate the absence of both *de jure* [1] and *de facto* [2] governmental control over export activities.

Evaluating the facts for the final redetermination in CDIW in light of the separate rates policy articulated in Silicon Carbide, the Department determined that respondent CMP, as an exporter of subject merchandise produced by Bin He Foundry and Song Zhuang Foundry, was entitled to a separate rate.

As a result of calculating a separate rate for CMP, the final weighted-average dumping margin for CMP is 0.44 percent, and is, therefore, *de minimis*, pursuant to 19 CFR 353.6(a) of the Department's regulations. Consequently, our final less-than-fair-value determination for CMP, with respect to its exports of subject merchandise produced by Bin He Foundry and Song Zhuang Foundry, is negative.

Exclusion From the Application of the Antidumping Duty Order, in Part

Pursuant to section 735(c)(2) of the Act and 19 CFR 353.21(c), and consistent with the Final Determination of Sales at Less Than Fair Value: Certain Cased Pencils From the People's Republic of China, 59 FR 55625, 31 (November 8, 1994), we are excluding from the application of the order imports of subject merchandise that are sold by CMP and manufactured by the producers whose factors formed the basis for the *de minimis* margin. Under the NME methodology, the *de minimis* margin for each exporter is based on a comparison of the exporter's U.S. price and FMV based on the factors of production of a specific producer (which may be a different party). The

[1] Evidence supporting, though not requiring, a finding of *de jure* absence of central control includes: (1) An absence of restrictive stipulations associated with an individual exporter's business and export licenses; (2) any legislative enactments decentralizing control of companies; or (3) any other formal measures by the government decentralizing control of companies.

[2] The factors considered include: (1) Whether the export prices are set by or subject to the approval of a governmental authority; (2) whether the respondent has authority to negotiate and sign contracts and other agreements; (3) whether the respondent has autonomy from the government in making decisions regarding the selection of management; and (4) whether the respondent retains the proceeds of its export sales and makes independent decisions regarding disposition of profits or financing of losses (see *Silicon Carbide*).

exclusion, therefore, applies only to subject merchandise sold by the exporter and manufactured by that specific producer, or producers. Merchandise that is sold by the exporter but manufactured by other producers will be subject to the order on *CDIW*. This is also consistent with *Jia Farn* (See, *Jia Farn Manufacturing Co., Ltd.* v. *United States*, Slip Op. 93–42 (March 26, 1993)), which held that exclusion of merchandise manufactured and sold by respondent did not cover merchandise sold but not manufactured by respondent. Therefore, merchandise that is sold by CMP but produced by someone other than Bin He Foundry or Song Zhuang Foundry is subject to suspension of liquidation at the ''all others'' cash deposit rate. In addition, if the Department has reasonable cause to believe or suspect at any time during the existence of the antidumping duty order that CMP has sold or is likely to sell the subject merchandise to the United States at less than its foreign market value, the Department may institute an administrative review of CMP under section 751(b) of the Tariff Act of 1930, as amended.

On November 25, 1994, the CIT ordered that plaintiffs' consent motion for injunction against liquidation, which was consented to by the Department and defendant-intervenor, be granted. Therefore, the effective date of CMP's exclusion from the order is retroactive to February 18, 1993, the publication date of the Preliminary Determination of Sales at Less Than Fair Value: Certain Compact Ductile Iron Waterworks Fittings and Accessories Thereof from the People's Republic of China (58 FR 8930), and the date we began suspension of liquidation for entries of the subject merchandise from the People's Republic of China.

Termination of Administrative Review

Since publication of the duty order, the Department has initiated, pursuant to section 751 of the Act, the first administrative review of the antidumping duty order. That review is examining exports of subject merchandise during the review period by CMP (as well as other exporters). (See Notice of Initiation of Administrative Review, 59 FR 51939 (October 13, 1994)). Because we are retroactively excluding CMP, as an exporter of subject merchandise produced by Bin He Foundry and Song Zhuang Foundry, from the application of this antidumping duty order, we are also hereby terminating the administrative review with regard to imports by CMP, which are produced by Bin He Foundry and Song Zhuang Foundry.

Termination of Suspension of Liquidation

Pursuant to section 516(e)(2) of the Act, the Department will instruct the U.S. Customs Service to terminate the suspension of liquidation of subject merchandise produced by Bin He Foundry and Song Zhuang Foundry and exported by CMP, which is entered, or withdrawn from warehouse, for consumption on or after February 18, 1993, and to proceed with liquidation of such entries without regard to antidumping duties. Additionally, the Department will instruct U.S. Customs Service to release any bond or other security with respect to entries of the subject merchandise, pursuant to section 735(c)(3)(B) of the Act.

Dated: December 29, 1994.

Barbara R. Stafford,

Acting Assistant Secretary for Import Administration.

[FR Doc. 95–349 Filed 1–5–95; 8:45 am]

BILLING CODE 3510–DS–P

[A–570–836]

Notice of Preliminary Affirmative Determination of Critical Circumstances: Glycine From the People's Republic of China

AGENCY: International Trade Administration, Import Administration, Department of Commerce.

EFFECTIVE DATES: January 6, 1995.

FOR FURTHER INFORMATION CONTACT: Susan Strumbel, Office of Countervailing Investigations, Import Administration, International Trade Administration, U.S. Department of Commerce, 14th Street and Constitution Avenue, NW., Washington, DC 20230; telephone (202) 482–1442.

Preliminary Critical Circumstances Determination

The Department of Commerce (''the Department'') published its preliminary determination of sales at less than fair value in this investigation on November 16, 1994 (59 FR 59211). On December 1, 1994, petitioners alleged that there is a reasonable basis to believe or suspect that critical circumstances exist with respect to imports of the subject merchandise.

In accordance with 19 CFR 353.16(b)(2)(ii), when a critical circumstances allegation is filed later than 20 days before the scheduled date of the preliminary determination (as was done in this case), we must issue our preliminary determination not later than 30 days after the allegation is submitted.

Section 733(e)(1) of the Tariff Act of 1930 Act of 1930 (''the Act'') provides that the Department will determine that critical circumstances exist if:

(A)(i) there is a history of dumping in the United States or elsewhere of the class or kind of merchandise which is the subject of the investigation, or

(ii) the person by whom, or for whose account, the merchandise was imported knew or should have known that the exporter was selling the merchandise which is the subject of the investigation at less than its fair value, and

(B) there have been massive imports of the class or kind of merchandise which is the subject of the investigation over a relatively short period.

History of Dumping

Petitioners in this investigation have not provided information indicating that there are outstanding third country antidumping duty orders on glycine from the People's Republic of China (''PRC''). Additionally, the Department has been unable to determine from its sources whether or not there are third country antidumping duty orders on glycine from the PRC.

Importer Knowledge

With respect to the alternative first criterion, we have consistently determined that preliminary antidumping duty margins in excess of 25 percent on U.S. purchase price sales are sufficient to impute importer knowledge of sales at less than fair value. See, Final Determination of Sales at Less Than Fair Value: Silicon Metal from China (56 FR 18570, April 23, 1991) and Final Determination of Sales at Less Than Fair Value: Extruded Rubber Thread from Malaysia (57 FR 38465, August 25, 1992). In this investigation, the rate for all companies, based on best information available (''BIA''), was in excess of 25 percent. Therefore, we determine that importers either knew or should have known that exporters were selling glycine at less than fair value.

Massive Imports

Because we have preliminarily determined that the first statutory criterion is met for finding critical circumstances (*i.e.*, importer knowledge of sales at less than fair value), we must consider the second statutory criterion: whether imports of the merchandise have been massive over a relatively short period.

Because the potential respondents have impeded the Department's critical circumstances analysis by refusing to

participate in this investigation, we determine, as BIA, that imports have been massive over a short period. Therefore, we preliminarily determine that critical circumstances exist.

Final Critical Circumstances Determination

We will make a final determination concerning critical circumstances when we make our final determination of sales at less than fair value in this investigation.

Suspension of Liquidation

In accordance with section 733(d)(1) and 733(e)(2) of the Act, we are directing the Customs Service to suspend liquidation of all entries of glycine from the PRC, as defined in the ''Scope of the Investigation'' section of this notice, that are entered, or withdrawn from warehouse, for consumption on or after August 18, 1994, which is 90 days prior to the date of publication of our affirmative preliminary determination in the **Federal Register**. This suspension of liquidation will remain in effect until further notice.

ITC Notification

In accordance with section 733(f) of the Act, we have notified the ITC of our determination.

Public Comment

Written comments regarding this preliminary determination on critical circumstances should be incorporated into the case and rebuttal briefs which are due on January 5 and January 7, 1995, respectively. Parties wishing to comment on this determination, but who are unable to do so in the context of the case and rebuttal briefs noted above, should submit comments no later than January 13, 1995.

This determination is published pursuant to section 733(f) of the Act.

Dated: December 30, 1994.

Barbara R. Stafford,

Acting Assistant Secretary for Import Administration.

[FR Doc. 95–350 Filed 1–5–95; 8:45 am]

BILLING CODE 3510–DS–P

COMMITTEE FOR THE IMPLEMENTATION OF TEXTILE AGREEMENTS

Request for Public Comments on Bilateral Textile Consultations with the Government of Thailand on Certain Cotton and Man-Made Fiber Textiles and Textile Products

December 30, 1994.

AGENCY: Committee for the Implementation of Textile Agreements (CITA).

ACTION: Notice.

FOR FURTHER INFORMATION CONTACT: Ross Arnold, International Trade Specialist, Office of Textiles and Apparel, U.S. Department of Commerce, (202) 482–4212. For information on categories on which consultations have been requested, call (202) 482–3740.

SUPPLEMENTARY INFORMATION:

Authority: Executive Order 11651 of March 3, 1972, as amended; section 204 of the Agricultural Act of 1956, as amended (7 U.S.C. 1854).

On November 28, 1994, under the terms of the Bilateral Textile Agreement of September 3, 1991, as amended and extended, between the Governments of the United States and Thailand, the United States Government requested consultations with the Government of Thailand with respect to Categories 352/652 (underwear), Category 603 (staple fiber yarn) and Category 670–L (luggage).

The purpose of this notice is to advise the public the request to consult was based on year ending August 1994 trade of 1,505,169 dozen for Categories 352/652; 792,415 kilograms for Category 603; and 19,929,610 kilograms for Category 670–L.

Summary market statements concerning Categories 352/652, 603 and 670–L follow this notice.

Anyone wishing to comment or provide data or information regarding the treatment of Categories 352/652, 603 and 670–L, under the agreement with the Government of Thailand, or to comment on domestic production or availability of products included in the categories, is invited to submit 10 copies of such comments or information to Rita D. Hayes, Chairman, Committee for the Implementation of Textile Agreements, U.S. Department of Commerce, Washington, DC 20230; ATTN: Helen L. LeGrande. The comments received will be considered in the context of the consultations with the Government of Thailand.

Because the exact timing of the consultations is not yet certain, comments should be submitted promptly. Comments or information submitted in response to this notice will be available for public inspection in the Office of Textiles and Apparel, room H3100, U.S. Department of Commerce, 14th and Constitution Avenue, NW., Washington, DC.

Further comments may be invited regarding particular comments or information received from the public which the Committee for the Implementation of Textile Agreements considers appropriate for further consideration.

The solicitation of comments regarding any aspect of the bilateral textile agreement or any other appropriate agreement between the Governments of the United States and Thailand or the implementation thereof is not a waiver in any respect of the exemption contained in 5 U.S.C. 553(a)(1) relating to matters which constitute ''a foreign affairs function of the United States.''

The United States remains committed to finding a solution concerning Categories 352/652, 603 and 670–L. Should such a solution be reached in consultations with the Government of Thailand, further notice will be published in the **Federal Register**.

A description of the textile and apparel categories in terms of HTS numbers is available in the CORRELATION: Textile and Apparel Categories with the Harmonized Tariff Schedule of the United States (see **Federal Register** notice 58 FR 62645, published on November 29, 1993).

Rita D. Hayes,

Chairman, Committee for the Implementation of Textile Agreements.

Market Statement—Thailand

Category 352/652—Cotton and Manmade Fiber Underwear

October 1994

Import Situation and Conclusion

U.S. imports of cotton and manmade fiber underwear, Category 352/652, from Thailand reached 1,505,169 dozen for the year ending August 1994, 27 percent above the 1,183,686 dozen imported in the year ending August 1993. During the first eight months of 1994, imports from Thailand were 989,385 dozen, 23 percent above their January-August 1993 level.

The sharp and substantial increase in Category 352/652 imports from Thailand is causing a real risk of disruption in the U.S. market for cotton and manmade fiber underwear.

U.S. Production, Import Penetration, and Market Share

U.S. production of cotton and manmade fiber underwear, Category

352/652, declined from 175,542,000 dozen in 1992 to 168,802,000 dozen in 1993, a decline of 4 percent. Production continued to decline in 1994, falling to 81,713,000 dozen in the first half for 1994, 8 percent below the January-June 1993 production level.

In contrast, U.S. imports of cotton and manmade fiber underwear increased from 65,507,000 dozen in 1992 to 79,962,000 dozen in 1993, a 22 percent increase. Category 352/652 imports continued to increase in 1994, reaching 59,204,000 dozen in the first eight months of 1994, 12 percent above the January-August 1993 import level.

The ratio of imports to domestic production increased from 37 percent in 1992 to 47 percent in 1993, and reached 51 percent during the first half of 1994. The share of this market held by domestic manufacturers fell from 73 percent in 1992 to 68 percent in 1993, a decline of five percentage points, and fell to 66 percent during the first half 1994.

Duty-Paid Value and U.S. Producers' Price

Approximately 71 percent of Category 352/652 imports from Thailand during the year ending August 1994 entered under HTSUSA numbers 6107.11.0010—men's knitted cotton underpants and briefs; 6108.21.0010—women's knitted cotton briefs and panties; and 6207.11.0000—men's and boys' woven cotton underpants and briefs. This underwear entered the U.S. at landed duty-paid values below U.S. producers' prices for comparable underwear.

Market Statement—Thailand

Category 603—85 Percent or More Artificial Staple Fiber Yarn

October 1994

Import Situation and Conclusion

U.S. imports of Category 603, 85 percent or more artificial staple fiber yarn, from Thailand reached 792,415 kilograms for the year ending August 1994, more than double the 368,987 kilograms imported in the year ending August 1993. During the first eight months of 1994, imports from Thailand were 683,140 kilograms, two and half times their January-August 1993 level, and 84 percent above their calendar year 1993 level.

The sharp and substantial increase in Category 603 imports from Thailand is causing a real risk of disruption in the U.S. market for 85 percent or more artificial staple fiber yarn.

U.S. Production, Import Penetration, and Market Share

U.S. production of 85 percent or more artificial staple fiber yarn, Category 603, declined from 36,694,000 kilograms in 1991 to 30,964,000 kilograms in 1993, a 16 percent decrease. By contrast, U.S. imports of Category 603, nearly tripled increasing from 3,638,000 kilograms in 1991 to 9,886,000 kilograms in 1993. Imports continued to increase in 1994 reaching 7,714,000 kilograms in the first eight months, 24 percent above the January-August 1993 level.

The ratio of imports to domestic production more than tripled, increasing from 10 percent in 1991 to 32 percent in 1993. The share of this market held by domestic manufacturers fell from 91 percent in 1991 to 76 percent in 1993, a decline of 15 percentage points.

Duty-Paid Value and U.S. Producers' Price

All of Category 603 imports from Thailand during 1994 entered under HTSUSA numbers 5510.11.0000—single artificial fiber staple yarn; and 5510.12.0000—multiple artificial fiber staple yarn. These yarns entered the U.S. at landed duty-paid values below U.S. producers' prices and below the landed duty-paid values of other major foreign suppliers to the U.S. market for comparable yarn.

Market Statement—Thailand

Category 670–L—Manmade Fiber Luggage

October 1994

Import Situation and Conclusion

U.S. imports of Category 670-L, manmade fiber luggage, from Thailand reached 19.9 million kilograms for the year ending August 1994, 41 percent above the 14.1 million kilograms imported a year earlier. During the first eight months of 1994, imports from Thailand were 13.3 million kilograms, 44 percent above their January-August 1993 level. During the year ending August 1994, Thailand became the largest supplier of manmade fiber luggage to the U.S., accounting for 24 percent of total Category 670–L imports. A year earlier, Thailand was the third largest supplier, accounting for 18 percent of total Category 670–L imports.

The sharp and substantial increase in Category 670–L imports from Thailand is causing a real risk of market disruption in the U.S. market for manmade fiber luggage.

U.S. Production, Import Penetration and Market Share

U.S. production of manmade fiber luggage, Category 670–L, measured in kilograms of fabric consumed in the production of luggage, declined every year since 1989 except for 1992, when production increased 1 percent. Production in 1993 declined 3 percent from the 1992 level and was 10 percent below the 1989 level. In contrast, Category 670–L luggage imports, measured in kilograms of fabric content, increased every year since 1989 except in 1991, when imports decreased 3 percent from the 1990 level. However, imports of category 670–L increased 16 percent from 1991 to 1993 and are up 10 percent for the first eight months of 1994 when compared to the January-August 1993 level.

The ratio of imports to domestic production in Category 670–L luggage increased to 250 percent in 1993 from 195 percent in 1989. The domestic manufacturers' share of this market fell from 34 percent in 1989 to 29 percent in 1993, a decline of 5 percentage points.

Duty-Paid Values and U.S. Producers' Prices

Approximately 94 percent of Category 670–L imports from Thailand during 1994 entered the U.S. under HTSUSA numbers 4202.12.8070—suitcases and similar containers of manmade fiber, and 4202.92.3030—travel bags and similar bags of manmade fiber. The prices of these imports of luggage from Thailand are lower than the prices of comparable U.S. produced luggage.

[FR Doc. 95–304 Filed 1–5–95; 8:45 am]

BILLING CODE 3510–DR–F

COMMITTEE FOR PURCHASE FROM PEOPLE WHO ARE BLIND OR SEVERELY DISABLED

Procurement List; Proposed Additions

AGENCY: Committee for Purchase From People Who Are Blind or Severely Disabled

ACTION: Proposed Additions to Procurement List.

SUMMARY: The Committee has received proposals to add to the Procurement List services to be furnished by nonprofit agencies employing persons who are blind or have other severe disabilities.

COMMENTS MUST BE RECEIVED ON OR BEFORE: February 6, 1995.

ADDRESSES: Committee for Purchase From People Who Are Blind or Severely Disabled, Crystal Square 3, Suite 403, 1735 Jefferson Davis Highway, Arlington, Virginia 22202–3461.

FOR FURTHER INFORMATION CONTACT: Beverly Milkman (703) 603–7740.

SUPPLEMENTARY INFORMATION: This notice is published pursuant to 41 U.S.C. 47(a) (2) and 41 CFR 51–2.3. Its purpose is to provide interested persons an opportunity to submit comments on the possible impact of the proposed actions.

If the Committee approves the proposed additions, all entities of the Federal Government (except as otherwise indicated) will be required to procure the services listed below from

nonprofit agencies employing persons who are blind or have other severe disabilities.

I certify that the following action will not have a significant impact on a substantial number of small entities. The major factors considered for this certification were:

1. The action will not result in any additional reporting, recordkeeping or other compliance requirements for small entities other than the small organizations that will furnish the services to the Government.

2. The action does not appear to have a severe economic impact on current contractors for the services.

3. The action will result in authorizing small entities to furnish the services to the Government.

4. There are no known regulatory alternatives which would accomplish the objectives of the Javits-Wagner-O'Day Act (41 U.S.C. 46–48d) in connection with the services proposed for addition to the Procurement List.

Comments on this certification are invited. Commenters should identify the statement(s) underlying the certification on which they are providing additional information.

The following services have been proposed for addition to Procurement List for production by the nonprofit agency listed:

Acquisition & Distribution of Batteries, Greenville, North Carolina, NPA: Eastern Carolina Vocational Center, Inc., Greenville, North Carolina

Laundry Service, Basewide, Fort Sam Houston, Texas, NPA: Goodwill Industries of San Antonio, San Antonio, Texas

Laundry Service, Naval Undersea Warfare Center, Keyport, Washington, NPA: Northwest Center for the Retarded, Seattle, Washington

Mailing Service, Headquarters, Air Force Military Personnel Center, Randolph Air Force Base, Texas, NPA: Goodwill Industries of San Antonio, San Antonio, Texas

Beverly L. Milkman,

Executive Director.

[FR Doc. 95–330 Filed 1–5–95; 8:45 am]

BILLING CODE 6820–33–P

Addition

AGENCY: Committee for Purchase From People Who Are Blind or Severely Disabled.

ACTION: Addition to the Procurement List.

SUMMARY: This action adds to the Procurement List a service to be furnished by nonprofit agencies employing persons who are blind or have other severe disabilities.

EFFECTIVE DATES: February 6, 1995.

ADDRESSES: Committee for Purchase From People Who Are Blind or Severely Disabled, Crystal Square 3, Suite 403, 1735 Jefferson Davis Highway, Arlington, Virginia 22202–3461.

FOR FURTHER INFORMATION CONTACT: Beverly Milkman (703) 603–7740.

SUPPLEMENTARY INFORMATION: On July 29, 1994, the Committee for Purchase From People Who Are Blind or Severely Disabled published notices (59 F.R. 38586) of proposed addition to the Procurement List.

After consideration of the material presented to it concerning capability of qualified nonprofit agencies to provide the service, fair market price, and impact of the addition on the current or most recent contractors, the Committee has determined that the services listed below are suitable for procurement by the Federal Government under 41 U.S.C. 46–48d and 41 CFR 51–2.4.

I certify that the following action will not have a significant impact on a substantial number of small entities. The major factors considered for this certification were:

1. The action will not result in any additional reporting, recordkeeping or other compliance requirements for small entities other than the small organizations that will furnish the service to the Government.

2. The action does not appear to have a severe economic impact on current contractors for the service.

3. The action will result in authorizing small entities to furnish the service to the Government.

4. There are no known regulatory alternatives which would accomplish the objectives of the Javits-Wagner-O'Day Act (41 U.S.C. 46–48c) in connection with the service proposed for addition to the Procurement List.

Accordingly, the following service is hereby added to the Procurement List:

Janitorial/Custodial for the following locations: Federal Building, Plattsburgh, New York

U.S. Border Station, Champlain, New York

This action does not affect current contracts awarded prior to the effective date of this addition or options exercised under those contracts.

Beverly L. Milkman,

Executive Director.

[FR Doc. 95–331 Filed 1–5–95; 8:45 am]

BILLING CODE 6820–33–p

DEPARTMENT OF DEFENSE

Office of the Secretary

Meeting of the Commission on Roles and Missions of the Armed Forces

AGENCY: Department of Defense, Commission of Roles and Missions of the Armed Forces.

ACTION: Notice.

SUMMARY: Notice is hereby given of a forthcoming meeting of the Commission on Roles and Missions of the Armed Forces. The Commission will meet in closed session from 12:30 p.m. until approximately 2:00 p.m., and in open session from approximately 2:00 p.m. until 6:00 p.m.

During the open part of the meeting, the Commission will consider a thematic framework for its task, discuss selected process issues, and receive a briefing from the Defense Logistics Agency. During the closed portion of the meeting, the Commission will address topics that require the disclosure and discussion of classified information, including counter-proliferation, information warfare and other classified issues.

In accordance with section 10(d) of the Federal Advisory Committee Act, Public Law 92–453, as amended (5 U.S.C. App II), it has been determined that these portions of the Commission on Roles and Missions meeting concern matters listed in 5 U.S.C. 552b(c)(1), and that, accordingly, the meeting will be closed to the public during these times.

DATES: January 11, 1995, 12:30 p.m. until 6:00 p.m.

ADDRESSES: Hyatt Regency Arlington, 1325 Wilson Boulevard, Arlington, Virginia.

FOR FURTHER INFORMATION CONTACT: Commander Gregg Hartung, Director for Public Affairs, Commission on Roles and Missions, 1100 Wilson Boulevard, Suite 1200F, Arlington, Virginia 22209; telephone (703) 696–4250.

SUPPLEMENTARY INFORMATION: Seating will be available on a first-come, first-served basis. Members of the press who with to reserve seating should contact Commander Gregg Hartung, Director for Public Affairs, in advance at (703) 696–4250.

Extraordinary circumstances compel notice of this meeting to be posted in less than the 15-day requirement.

Dated: January 3, 1995.

L.M. Bynum,

Alternate OSD Federal Register Liaison Officer, Department of Defense.

[FR Doc. 95–313 Filed 1–5–95; 8:45 am]

BILLING CODE 5000–4–M

Office of the Secretary of Defense

Per Diem, Travel, and Transportation Allowance Committee

AGENCY: Per Diem, Travel, and Transportation Allowance Committee.

ACTION: Publication of Changes in Per Diem Rates.

SUMMARY: The Per Diem, Travel and Transportation Allowance Committee is publishing Civilian Personnel Per Diem Bulletin Number 181. This bulletin lists changes in per diem rates prescribed for U.S. Government employees for official travel in Alaska, Hawaii, Puerto Rico, the Northern Mariana Islands and Possessions of the United States. Bulletin Number 181 is being published in the **Federal Register** to assure that travelers are paid per diem at the most current rates.

EFFECTIVE DATE: 1 January 1995.

SUPPLEMENTARY INFORMATION: This document gives notice of changes in per diem rates prescribed by the Per Diem Travel and Transportation Allowance Committee for non-foreign areas outside the continental United States. Distribution of Civilian Personnel Per Diem Bulletins by mail was discontinued effective 1 June 1979. Per Diem Bulletins published periodically in the **Federal Register** now constitute the only notification of change in per diem rates to agencies and establishments outside the Department of Defense.

The text of the Bulletin follows:

BILLING CODE 5000–04–M

MAXIMUM PER DIEM RATES FOR OFFICIAL TRAVEL IN ALASKA, HAWAII, THE COMMONWEALTHS OF PUERTO RICO AND THE NORTHERN MARIANA ISLANDS AND POSSESSIONS OF THE UNITED STATES BY FEDERAL GOVERNMENT CIVILIAN EMPLOYEES

LOCALITY	MAXIMUM LODGING AMOUNT (A) +	M&IE RATE (B) =	MAXIMUM PER DIEM RATE (C)	EFFECTIVE DATE
ALASKA:				
ADAK 5/	$ 10	$ 34	$ 44	10-01-91
ANAKTUVUK PASS	83	57	140	12-01-90
ANCHORAGE				
06-01--09-15	147	64	211	06-01-94
09-16--05-31	81	57	138	05-01-94
ANIAK	73	36	109	07-01-91
ATQASUK	129	86	215	12-01-90
BARROW	105	83	188	11-01-93
BETHEL	76	67	143	02-01-94
BETTLES	65	45	110	12-01-90
COLD BAY	110	54	164	07-01-93
COLDFOOT	95	59	154	10-01-92
CORDOVA	60	81	141	01-01-94
CRAIG	67	35	102	07-01-91
DENALI NATIONAL PARK	113	68	181	05-01-94
DILLINGHAM	85	64	149	11-01-93
DUTCH HARBOR-UNALASKA	113	67	180	05-01-92
EIELSON AFB				
05-15--09-15	106	59	165	05-15-94
09-16--05-14	68	55	123	01-01-94
ELMENDORF AFB				
06-01--09-15	147	64	211	06-01-94
09-16--05-31	81	57	138	05-01-94
EMMONAK	62	61	123	10-01-93
FAIRBANKS				
05-15--09-15	106	59	165	05-15-94
09-16--05-14	68	55	123	01-01-94
FALSE PASS	80	37	117	06-01-91
FT. RICHARDSON				
06-01--09-15	147	64	211	06-01-94
09-16--05-31	81	57	138	05-01-94
FT. WAINWRIGHT				
05-15--09-15	106	59	165	05-15-94
09-16--05-14	68	55	123	01-01-94
HOMER				
05-01--09-30	71	60	131	05-01-94
10-01--04-30	60	58	118	02-01-94
JUNEAU				
04-30--09-14	92	74	166	04-30-94
09-15--04-29	78	73	151	01-01-94

MAXIMUM PER DIEM RATES FOR OFFICIAL TRAVEL IN ALASKA, HAWAII, THE COMMONWEALTHS OF PUERTO RICO AND THE NORTHERN MARIANA ISLANDS AND POSSESSIONS OF THE UNITED STATES BY FEDERAL GOVERNMENT CIVILIAN EMPLOYEES

LOCALITY	MAXIMUM LODGING AMOUNT (A) +	M&IE RATE (B) =	MAXIMUM PER DIEM RATE (C)	EFFECTIVE DATE
ALASKA: (CONT'D)				
KATMAI NATIONAL PARK	$ 89	$ 59	$148	12-01-90
KENAI-SOLDOTNA				
04-02--09-30	104	74	178	04-02-94
10-01--04-01	67	71	138	01-01-94
KETCHIKAN				
04-01--09-30	82	71	153	04-01-94
10-01--03-31	69	70	139	01-01-94
KING SALMON 3/	75	59	134	12-01-90
KLAWOCK	75	36	111	07-01-91
KODIAK	74	65	139	01-01-94
KOTZEBUE	133	87	220	05-01-93
KUPARUK OILFIELD	75	52	127	12-01-90
METLAKATLA				
06-01--10-01	95	58	153	06-01-94
10-02--05-31	72	56	128	02-01-94
MURPHY DOME				
05-15--09-15	106	59	165	05-15-94
09-16--05-14	68	55	123	01-01-94
NELSON LAGOON	102	39	141	06-01-91
NOATAK	133	87	220	05-01-93
NOME	71	67	138	10-01-93
NOORVIK	133	87	220	05-01-93
PETERSBURG				
04-16--10-14	77	56	133	05-01-94
10-15--04-15	72	56	128	10-15-94
POINT HOPE	99	61	160	12-01-90
POINT LAY 6/	106	73	179	12-01-90
PRUDHOE BAY-DEADHORSE	73	60	133	11-01-93
SAND POINT	64	67	131	08-01-94
SEWARD				
05-01--09-30	90	65	155	05-01-94
10-01--04-30	52	62	114	01-01-94
SHUNGNAK	133	87	220	05-01-93
SITKA-MT. EDGECOMBE	79	71	150	01-01-94
SKAGWAY				
04-01--09-30	82	71	153	04-01-94
10-01--03-31	69	70	139	01-01-94
SPRUCE CAPE	74	65	139	01-01-94
ST. GEORGE	100	39	139	06-01-91

MAXIMUM PER DIEM RATES FOR OFFICIAL TRAVEL IN ALASKA, HAWAII, THE COMMONWEALTHS OF PUERTO RICO AND THE NORTHERN MARIANA ISLANDS AND POSSESSIONS OF THE UNITED STATES BY FEDERAL GOVERNMENT CIVILIAN EMPLOYEES

LOCALITY	MAXIMUM LODGING AMOUNT (A) +	M&IE RATE (B) =	MAXIMUM PER DIEM RATE (C)	EFFECTIVE DATE
ALASKA: (CONT'D)				
ST. MARY'S	$ 77	$ 59	$136	06-01-93
ST. PAUL ISLAND	62	63	125	10-01-93
TANANA	71	67	138	10-01-93
TOK				
05-02--09-30	60	58	118	05-02-94
10-01--05-01	51	57	108	01-01-94
UMIAT	97	63	160	12-01-90
VALDEZ				
05-01--09-14	95	61	156	05-01-94
09-15--04-30	79	59	138	01-01-94
WAINWRIGHT	90	75	165	12-01-90
WALKER LAKE	82	54	136	12-01-90
WRANGELL				
04-01--09-30	82	71	153	04-01-94
10-01--03-31	69	70	139	01-01-94
YAKUTAT	77	58	135	11-01-93
OTHER 3, 4, 6/	63	48	111	01-01-93
AMERICAN SAMOA	73	48	121	11-01-94
GUAM	155	75	230	05-01-93
HAWAII:				
ISLAND OF HAWAII: HILO	73	61	134	06-01-93
ISLAND OF HAWAII: OTHER	111	69	180	01-01-95
ISLAND OF KAUAI	105	70	175	01-01-95
ISLAND OF KURE 1/		13	13	12-01-90
ISLAND OF MAUI	99	76	175	01-01-95
ISLAND OF OAHU	100	67	167	01-01-95
OTHER	79	62	141	06-01-93
JOHNSTON ATOLL 2/	22	22	44	08-01-94
MIDWAY ISLANDS 1/		13	13	12-01-90
NORTHERN MARIANA ISLANDS:				
ROTA	48	77	125	05-01-94
SAIPAN	89	80	169	05-01-94
TINIAN	50	72	122	05-01-94
OTHER	20	13	33	12-01-90
PUERTO RICO:				
BAYAMON				
05-01--11-24	107	75	182	11-01-94
11-25--04-30	130	77	207	11-25-94

MAXIMUM PER DIEM RATES FOR OFFICIAL TRAVEL IN ALASKA, HAWAII, THE COMMONWEALTHS OF PUERTO RICO AND THE NORTHERN MARIANA ISLANDS AND POSSESSIONS OF THE UNITED STATES BY FEDERAL GOVERNMENT CIVILIAN EMPLOYEES

LOCALITY	MAXIMUM LODGING AMOUNT (A) +	M&IE RATE (B) =	MAXIMUM PER DIEM RATE (C)	EFFECTIVE DATE
PUERTO RICO: (CONT'D)				
CAROLINA				
05-01--11-24	$107	$ 75	$182	11-01-94
11-25--04-30	130	77	207	11-25-94
FAJARDO (INCL CEIBA, LUQUILLO AND HUMACAO)				
04-16--12-10	65	52	117	10-01-93
12-11--04-15	110	52	162	12-11-93
FT. BUCHANAN (INCL GSA SERV CTR, GUAYNABO)				
05-01--11-24	107	75	182	11-01-94
11-25--04-30	130	77	207	11-25-94
MAYAGUEZ	85	65	150	08-01-92
PONCE	96	75	171	09-01-93
ROOSEVELT ROADS				
04-16--12-10	65	52	117	10-01-93
12-11--04-15	110	52	162	12-11-93
SABANA SECA				
05-01--11-24	107	75	182	11-01-94
11-25--04-30	130	77	207	11-25-94
SAN JUAN (INCL SAN JUAN COAST GUARD UNITS)				
05-01--11-24	107	75	182	11-01-94
11-25--04-30	130	77	207	11-25-94
OTHER 7/	63	52	115	08-01-92
VIRGIN ISLANDS OF THE U.S.:				
ST. CROIX				
04-15--12-14	119	73	192	08-01-94
12-15--04-14	169	78	247	12-15-94
ST. JOHN				
06-01--12-14	255	78	333	11-01-94
12-15--05-31	370	90	460	12-15-94
ST. THOMAS				
04-17--12-17	141	106	247	08-01-94
12-18--04-16	220	114	334	12-18-94
WAKE ISLAND 2/	30	25	55	10-01-94
ALL OTHER LOCALITIES	20	13	33	12-01-90

BILLING CODE 5000–04–C

Footnotes

[1] Commercial facilities are not available. The meal and incidental expense rate covers charges for meals in available facilities plus an additional allowance for incidental expenses and will be increased by the amount paid for Government quarters by the traveler.

[2] Commercial facilities are not available. Only Government-owned and contractor operated quarters and mess are available at this locality. This per diem rate is the amount necessary to defray the cost of lodging, meals and incidental expenses.

[3] On any day when U.S. Government or contractor quarters are available and U.S. Government or contractor messing facilities are used, a meal and incidental expense rate of $19.65 is prescribed to cover meals and incidental expenses at Shemya AFB, Clear AFS, Galena APT and King Salmon APT. This rate will be increased by the amount paid for U.S. Government or contractor quarters and by $4 for each meal procured at a commercial facility. The rates of per diem prescribed herein apply from 0001 on the day after arrival through 2400 on the day prior to the day of departure.

[4] On any day when U.S. Government or contractor quarters are available and U.S. Government or contractor messing facilities are used, a meal and incidental expense rate of $34 is prescribed to cover meals and incidental expenses at Amchitka Island, Alaska. This rate will be increased by the amount paid for U.S. Government or contractor quarters and by $10 for each meal procured at a commercial facility. The rates of per diem prescribed herein apply from 0001 on the day after arrival through 2400 on the day prior to the day of departure.

[5] On any day when U.S. Government or contractor quarters are available and U.S. Government or contractor messing facilities are used, a meal and incidental expense rate of $25 is prescribed instead of the rate prescribed in the table. This rate will be increased by the amount paid for U.S. Government or contractor quarters.

[6] The meal rates listed below are prescribed for the following locations in Alaska: Cape Lisburne RRL, Cape Newenham RRL, Cape Romanzof APT, Fort Yukon RRL, Indian Mtn RRL, Sparrevohn RRL, Tatalina RRL, Tin City RRL, Barter Island AFS, Point Barrow AFS, Point Lay AFS and Oliktok AFS. The amount to be added to the cost of government quarters in determining the per diem will be $3.50 plus the following amount:

	Daily rate
DOD Personnel	$13
Non-DOD Personnel	30

[7] (Eff 9–1–94) A per diem rate of $200 (lodging $148; M&IE $52) will be in effect for Las Croabas, Puerto Rico, during the Annual Conference of the National Association of State Boating Law Administrators (NASBLA) being held at the El Conquistador Resort and County Club. This rate will be in effect from 4–12 September 1994 only for travelers attending the conference and only for travelers staying at the El Conquistador Resort.

Dated: January 3, 1995.

L.M. Bynum,

Alternate OSD Federal Register Liaison Officer, Department of Defense.

[FR Doc. 95–314 Filed 1–5–95; 8:45 am]

BILLING CODE 5000–04–M

Public Information Collection Requirement Submitted to the Office of Management and Budget (OMB) for Review

ACTION: Notice.

The Department of Defense has submitted to OMB for clearance, the following proposal for collections of information under the provisions of the Paperwork Reduction Act (44 U.S.C. Chapter 35).

Title; Applicable Form; and OMB Control Number; Air Force ROTC College Scholarship Application; AF Form 113; OMB Control Number 0701–0101

Type of Request: Expedited Processing—Approval date requested: 30 days following publication in the **Federal Register**

Number of Respondents: 2,000

Responses per of Respondent: 1

Annual Responses: 2,000

Average Burden per Response: 30 minutes

Annual Burden Hours: 1,000

Needs and Uses: The information collected hereby, provides the DoD approving authority with the data necessary to evaluate and rule on requests from the public for military aerial support at community relations Events

Affected Public: Individuals or households; State or local governments; Federal agencies or employees; and non-profit institutions

Frequency: On occasion

Respondent's Obligation: Required to obtain or retain a benefit

OMB Desk Officer: Mr. Edward C. Springer. Written comments and recommendations on the proposed information collection should be sent to Mr. Springer at the Office of Management and Budget, Desk Officer for DoD, Room 10236, New Executive Office Building, Washington, DC. 20503

DOD Clearance Officer: Mr. William Pearce. Written requests for copies of the information collection proposal should be sent to Mr. Pearce, WHS/DIOR, 1215 Jefferson Davis Highway, Suite 1204, Arlington, VA 22202–4302.

Dated: January 3, 1995.

Patricia L. Toppings,

Alternate OSD Federal Register Liaison Officer, Department of Defense.

[FR Doc. 95–315 Filed 1–5–95; 8:45 am]

BILLING CODE 5000–04–M

DEFENSE NUCLEAR FACILITIES SAFETY BOARD

[Recommendation 94–5]

Integration of DOE Safety Rules, Orders, and Other Requirements

AGENCY: Defense Nuclear Facilities Safety Board.

ACTION: Notice; recommendation.

SUMMARY: The Defense Nuclear Facilities Safety Board has made a recommendation to the Secretary of Energy pursuant to 42 U.S.C. 2286a concerning Integration of DOE Safety Rules, Orders, and Other Requirements. The Board requests public comments on this recommendation.

DATES: Comments, data, views, or arguments concerning this recommendation are due on or before February 6, 1995.

ADDRESSES: Send comments, data, views, or arguments concerning this recommendation to: Defense Nuclear Facilities Safety Board, 625 Indiana Avenue, NW., Suite 700, Washington, DC 20004.

FOR FURTHER INFORMATION CONTACT: Kenneth M. Pusateri or Carole C. Morgan, at the address above or telephone (202) 208–6400.

Dated: January 2, 1995.

John T. Conway,

Chairman.

[Recommendation 94–5]

The Board has been following with considerable interest the structure of DOE's nuclear health and safety requirements as the transition is being made from the use of Orders to rulemaking. The Board recognizes that the change has been prompted by provisions of the Price/Anderson Act Amendments of 1988, the need for uniform, enforceable requirements, and by a desire of the Department to provide greater opportunities for public input into the process for establishment of requirements. Thus the Board understands the reasons for development and promulgation of nuclear safety requirements through rulemaking. However, the Board has expressed reservations in the past and remains concerned today lest the process of conversion of Orders to rules is used as occasion to:

(1) Unduly relax or eliminate important nuclear safety requirements in Orders.

(2) Relegate good nuclear safety practices extant in existing Orders to optional status.

(3) Forego or delay current efforts to bring safety practices into compliance with mutually agreed implementation plans that respond to recommendations of the Board.

In accepting Recommendation 91–1, your predecessor advised that rulemaking would be a time-consuming process, and he committed to expedited issuance and implementation of updated requirements in DOE Orders while rules are developed. More recently, in your response of October 21, 1994 to the Board's May 6, 1994 inquiry to the Department, you also acknowledged the need for interim development, revision, and compliance with requirements in DOE Orders while rules are being promulgated.

In fact, your response reflected more completely the process that has been developed in discussions with the Board and its staff. It stated that:

(1) The Department is committed to a requirements-based safety management program.

(2) Environment, safety and health requirements are identified in rules and Orders.

(3) Orders are the prevailing means by which the Department identifies management objectives that are requirements for its personnel, and when incorporated into contracts, requirements for DOE contractors.

(4) Nuclear safety Orders are being phased into rules. Rules are the documents by which the DOE establishes binding requirements of general applicability and are adopted pursuant to the Administrative Procedures Act.

(5) Contractors are expected to comply with a rule or Order when it becomes effective.[1]

(6) Standards/Requirements Identification Documents (S/RIDs) are developed as compilations of site and facility-specific requirements contained in applicable legislation, rules, Orders, technical standards and other directives necessary to operate facilities or conduct DOE activities with adequate protection of workers and the general public.

This summary clearly shows that DOE intends that the definition of what constitutes adequacy in the way of protection of workers and the public extends beyond the requirements of rules. In that, the Board definitely concurs. It is the compilation of requirements as envisaged for RIDs that represents the more comprehensive base upon which sites and facilities are to be managed from the environment, health and safety viewpoint. This has also been the thrust of many of the Board recommendations dealing with Order compliance.

However, the action toward development of S/RIDs has been slow. Requirements in Orders have been and are still the prevailing DOE means for defining safety requirements for contractors. Requirements in Orders are made enforceable by incorporating Orders into contracts. Therefore, the Board has reviewed a number of existing M & O contracts relative to provisions for Order compliance. The Board has also examined the health and safety management specifications included in several recently proposed contract actions (for example, at Rocky Flats and Hanford/Solid Waste Management). Performance per conditions specified either in existing contracts or those more recently examined will not in our view assure delivery of the safety management programs we believe that the Board and the Department expect.

Though the Board has been reassured by your letter of October 21 and by other means that requirements in DOE Orders are to remain operative until replaced by rules, there appears to be contrary guidance being issued to the field. For example, a May 27, 1994 memorandum from the Assistant Secretary for Defense Programs provides guidance that in effect encourages a premature shift in resources from Order compliance to rule compliance. For rules that will have progressed far enough in the promulgation process that only a few months are left for a show of compliance, such action may be appropriate as regards establishing priorities in assigning resources. However, such action should not be construed as countenancing relaxation of necessary requirements of the existing Order. Moreover, for proposed rules not nearly so far along in the rule-making process, impending developments should not be taken as cause for a slowdown on compliance efforts or the upgrading of applicable requirements now in Orders and contracts.

Along similar lines, the Board has noted a November 30, 1994 advisory from the Albuquerque field office to DOE headquarters (M.S. Dienes to J. Fitzgerald) that a hold has been placed on the radiation protection functional appraisal process until DOE review and approval of the implementation plans for the rule have been completed. There is no rational justification for such deferral. Such action suggests that field personnel may have been led to believe that there will be marked differences between those radiation protection programs under the rule and the requirements under existing Orders incorporated in contracts.

The provisions of the contracts and the above-mentioned advisories by DOE line management indicate that the integrated use of nuclear safety-related Rules, Orders, standards and guides in defining and executing DOE's safety management program may not be sufficiently well understood by either the M & O contractors or DOE managers. This issue was raised in the Board's letter of May 6, 1994 to the Department.

Given the situation as described above, the Board believes that further DOE actions are needed to ensure there is no relaxation of commitments made to achieve compliance with requirements in Orders while proposed rules are undergoing the development process. These actions should also provide for smooth transition of Orders to rules once promulgated. Toward that end, the Board recommends that DOE:

(1) Widely disseminate the information provided to the Board in response to our May 6, 1994 letter on DOE's Safety Management Program, and take steps to ensure that key technical and contracts personnel are well schooled in this topic.

(2) Promptly issue appropriate directives and procedures to DOE Headquarters, Field Offices and O&M contractors which:

(a) Embrace the basic principle that work already commenced or planned to develop and implement requirements in existing or revised Orders or S/RIDS should continue while rulemaking is underway;

(b) Explain in detail the relationship between safety requirements contained in Orders in O&M contracts and those contained in new rules, and the process by which a rule may ''supersede'' parts, or the entirety, of a safety Order;

(c) Explain that compliance with a requirement whether in a rule, Order or other directive is not accomplished by submittal of an adequate implementation plan but requires completion of action proposed by that plan;

(d) Provide guidance to contractors and DOE program offices on how to coordinate implementation plans for multiple requirements such as those in

[1] Note: Rules actually require an implementation plan and then allow a period for achieving compliance. A similar phase-in period is permissible for requirements in Orders incorporated into contracts.

Orders, rules, S/RIDS and other binding directives; and,

(e) In the process of eliminating duplicate requirements and in arranging the remaining ones along more user friendly guidelines, which the Board agrees is desirable, ensure that existing requirements that are necessary and appropriate are not relaxed nor eliminated, and schedule commitments for achieving compliance are not delayed.

(3) Ensure that compliance with the minimal (base-line) set of safety requirements contained in Rules is not construed as full compliance with all necessary safety requirements and does not displace effort to develop and implement through RIDS the best nuclear safety requirements and practices embodied in rules, Orders, standards, and other safety directives.

(4) Clearly establish such line, oversight, and legal responsibilities for review and approval of contractual provisions specifying environment, health and safety requirements for DOE contractors to ensure that the requirements-based safety management program expected by the DOE will be uniformly developed and consistently imposed across the complex.

Defense Nuclear Facilities Safety Board

December 29, 1994.

The Honorable Hazel R. O'Leary,
Secretary of Energy, Washington, DC 20585.

Dear Secretary O'Leary: On December 29, 1994, the Defense Nuclear Facilities Safety Board, in accordance with 42 U.S.C. 2286a(5), unanimously approved Recommendation 94–5 which is enclosed for your consideration. Recommendation 94–5 deals with Integration of DOE Safety Rules, Orders, and Other Requirements.

42 U.S.C. 2286d(a) requires the Board, after receipt by you, to promptly make this recommendation available to the public in the Department of Energy's regional public reading rooms. The Board believes the recommendation contains no information which is classified or otherwise restricted. To the extent this recommendation does not include information restricted by DOE under the Atomic Energy Act of 1954, 42 U.S.C. 2161–68, as amended, please arrange to have this recommendation promptly placed on file in your regional public reading rooms.

The Board will publish this recommendation in the **Federal Register**.

Sincerely,

John T. Conway,

Chairman.

[FR Doc. 95–363 Filed 1–5–95; 8:45 am]

BILLING CODE 6820–KD–M

DEPARTMENT OF ENERGY

Financial Assistance Award; in Support of U.S. Historically Black Colleges and Universities

AGENCY: U.S. Department of Energy (DOE), Pittsburgh Energy Technology Center (PETC).

ACTION: Notice of Restricted Eligibility.

SUMMARY: The Department of Energy (DOE), Pittsburgh Energy Technology announces that pursuant to 10 CFR 600.7(b)(1), and in support of the Metairie Site Office (MSO), it intends to conduct a competitive Program Solicitation No. DE–PS22–95MT95001 and to award, on a restricted eligibility basis, financial assistance (grants) to U.S. Historically Black Colleges and Universities who can show evidence of a collaborative effort with industry, in support of innovative research and advanced concepts pertinent to fossil resource conversion and utilization. Proposals will be subjected to a comparative merit review by a DOE technical panel, and awards will be made to a limited number of proposers on the basis of the scientific merit of the proposal, application of relevant program policy factors, and the availability of funds. The solicitation is expected to be available on January 12, 1995, and proposals must be received by the designated DOE office by February 28, 1995. The solicitation will be provided on a 3.5″, double-sided/high density diskette, using Word Perfect 5.1 for DOS.

FOR FURTHER INFORMATION CONTACT: U.S. Department of Energy, Pittsburgh Energy Technology Center, Acquisition and Assistance Division, P.O. Box 10940, MS 921–143, Pittsburgh, PA 15236, Attn.: Nancy Toppetta, Telephone: (412) 892–5715, FAX: (412) 892–6216.

Requests for solicitation copies must be made in writing or be transmitted via facsimile (FAX) to (412) 892–6212. If the diskette version of the solicitation is incompatible with the proposer's computer system, then a written request should be made for a paper copy in lieu of the diskette.

SUPPLEMENTARY INFORMATION: *Solicitation Number:* DE–PS22–95MT95001.

Title of Solicitation: ''Support of Advanced Fossil Resource Utilization Research at Historically Black Colleges and Universities.''

Objective: The Department of Energy seeks proposals from Historically Black Colleges and Universities (HBCUs) and HBCU-affiliated research institutes in collaboration with the private sector for innovative research and advanced concepts pertinent to fossil resource conversion and utilization. The resultant grants are intended to maintain and upgrade educational, training, and research capabilities of our HBCUs in the fields of science and technology related to fossil energy resources; to foster private sector participation, collaboration, and interaction with HBCUs; and to provide for the exchange of technical information and to raise the overall level of HBCU competitiveness with other institutions in the field of fossil energy research and development. Thus, the establishment of linkages between the HBCU and private sector fossil energy community is critical to the success of this program, and consistent with the Nation's goal of ensuring a future supply of fossil fuel scientists and engineers from a previously under-utilized resource.

Eligibility: Eligibility for participation in this Program Solicitation is redistricted to Historically Black Colleges and Universities (HBCUs) and HBCU-affiliated research institutes, and *only those that meet all of the following criteria may submit applications in response to this solicitation:* the Principal Investigator or a Co-Principal Investigator must be a teaching professor at the submitting university listed in the application; *and* at least one student registered at the university is to be compensated for work performed in the conduct of research proposed in the application; *and* each HBCU applicant must reflect collaboration with industry, i.e., the private sector. Proposals from HBCU-affiliated research institutes must be submitted through the college or university with which they are affiliated. The university (*not* the university-affiliated research institute) will be the recipient of any resultant DOE grant award. A small or large business enterprise will qualify as a ''private'' sector entity; however, the following are specifically excluded from recognition as private sector collaborators: Federal, state and/or local government agencies and non-HBCU colleges and universities. Collaboration by the private sector with the HBCU may be in the form of cash cost sharing, consultation, HBCU access to industrial facilities or equipment, experimental data and/or equipment not available at the university, or as a subgrantee/subcontractor to the HBCU.

Areas of Interest: In order to develop a focused national and regional program of HBCU research on fossil technology and resources, the Department is particularly interested in innovative

research and advanced concepts pertinent to fossil resource conversion and utilization limited to the nine (9) technical topics listed below.

Topic 1—Advanced Environmental Control Technology for Coal

Grant applications in support of Advanced Environmental Control Technology for Coal are only solicited for the following subtopics:

Coal Preparation
Hot Gas Stream Cleanup
Advanced High Efficiency Emissions Control
Waste Management

Topic 2—Advanced Coal Utilization

Grant applications in support of Advanced Coal Utilization are only solicited for the following subtopics:

Advanced Coal Combustion Systems
Fluid Bed Combustion (FBC)

Topic 3—Coal Liquefaction Technology

Grant applications in support of Coal Liquefaction Technology are only solicited for the following subtopics:

Advanced Concepts for Conversion of Coal to Liquids
Advanced Concepts for Conversion of Syngas to Liquids
Coal-Oil Coprocesing
Advanced Catalysts

Topic 4—Biotechnology for Fossil Energy

Grant applications in support of Biotechnology for Fossil Energy are only solicited for the following subtopics:

Beneficiation of Coal Resources
Conversion of Fossil Energy Resources
Bioreactors and Bioprocess Efficiency
Enhanced Oil and Gas Recovery

Topic 5—Advanced Recovery of Oil

Grant applications in support of Advanced Recovery of Oil are only solicited for the following subtopics:

Recovery of Light Oil
Recovery of Heavy Oil
Oil-Field Geoscience

Topic 6—Advanced Technology for the Recovery of Natural Gas

Grant applications in support of Advanced Technology for the Recovery of Natural Gas are only solicited for the following subtopics:

Advanced Geotechnology in Production Applications
Advanced Concepts for Natural Gas Conversion to Liquids

Topic 7—Advanced Environmental Considerations in the Recovery and Processing of Oil and Natural Gas

Grant applications in support of Advanced Environmental Considerations in the Recovery and Processing of Oil and Natural Gas are only solicited for innovative methods and concepts that allow more efficient, effective, and economical reduction of environmental risk from the processing and primary, secondary, and enhanced extraction of oil and natural gas. Research relating to open oil spill cleanup technologies will not be considered.

Topic 8—Heavy Oil Upgrading and Processing

Grant applications in support of Heavy Oil Upgrading and Processing, are sought for the following subtopics:

(a) *Improved Understanding of the Chemistry and the Thermodynamics of Adding Hydrogen to Heavy Feedstocks;*

(b) *Improved Understanding of the Chemistry and the Thermodynamics of the Removal of the Contaminants, i.e., S, N, O, Metals, etc., from Heavy Feedstocks;*

(c) *Development of New and Less Expensive Means for Producing Hydrogen from Feedstocks other than Light Hydro-carbons which are Excellent Fuels as is;*

(d)*Development of New and Less Expensive Contaminant Removal Processes for Heavy Oils along with Environmentally Acceptable Means of Disposing of the Contaminants when Removed;*

(e) *Development of New Knowledge to be used to Improve Catalytic Cracking and Hydrocracking Catalysts and Process;* and

(f) *Development of the Knowledge, Catalysts and Processes Necessary to Eliminate the Production of Petroleum Coke or the Ability to Liquefy it so that it can be Recycled to the Refinery.*

Topic 9—Faculty/Student Exploratory Grants

DOE is seeking grant applications from HBCU faculty and/or students for a supportable basic premise on any one of the subtopics covered under the above eight (8) technical topics. DOE will provide ''seed'' grants to the selected HBCU(s) to enable the faculty and/or student researcher(s) to conduct the proposed exploratory research and further develop the stated premise. This is the *only* topic (Topic nine (9)) under this Program Solicitation that does not require initial private sector collaboration for an application to be considered for selection.

Awards: DOE anticipates issuing financial assistance (grants) for each project. DOE reserves the right to support or not support any or all applications received in whole or in part, and to determine how many awards may be made through the solicitation subject to funds available in this fiscal year. The limitation on the maximum DOE funding for each selected grant to be awarded under this Program Solicitation is as follows:

	Maximum award
Topics 1–8:	
To 12 months grant duration	$80,000
13–24 months grant duration	140,000
25–60 months grant duration	200,000
Topic 9:	
To 12 months grant duration	10,000

Approximately one million dollars is planned for this solicitation. The total should provide support for approximately four to eight R&D proposal selections (Topics 1–8), and approximately two to six facility/student exploratory proposal selection (Topic 9).

Solicitation Release Date: The Program Solicitation is expected to be ready for mailing on January 12, 1995. Applications must be prepared and submitted in accordance with the instructions and forms in the Program Solicitation. To be eligible, applications must be received by the Department of Energy by the closing date stated in the solicitation.

Debra E. Ball,

Contracting Officer, Acquisition and Assistance Division.

[FR Doc. 95–141 Filed 1–5–95; 8:45 am]

BILLING CODE 6450–01–M

Record of Decision for Remedial Actions at Operable Unit 4, Fernald Environmental Management Project, Fernald, Ohio

AGENCY: U.S. Department of Energy.

ACTION: Notice.

SUMMARY: The Record of Decision (ROD) for Operable Unit 4 (OU4) at the Fernald Environmental Management Project was signed by the Department of Energy on November 3, 1994, and was approved by the Environmental Protection Agency (EPA) Region V on December 7, 1994, with concurrence of the Ohio Environmental Protection Agency. This decision was made in accordance with the provisions of the Comprehensive Environmental Response, Compensation, and Liability Act (CERCLA), 42 U.S.C. 9601 *et seq.* For OU4 at Fernald, the Department has chosen to complete an integrated CERCLA/National Environmental Policy Act (NEPA) process. To support the selection of a remedy for OU4, which includes K–65 silo wastes, the

Department prepared an integrated Feasibility Study/Proposed Plan-Environmental Impact Statement (FS/PP–EIS) (DOE/EIS–0195). Subsequent to the public involvement opportunities on the draft and final FS/PP–EIS documents, and after having considered the comments received, a remedy was selected in a joint CERCLA/NEPA ROD. The Department is publishing this Declaration Statement of the joint CERCLA/NEPA ROD, as originally signed in November 1994, as specified in the Department NEPA regulations [10 CFR 1021.315(c)].

FOR FURTHER INFORMATION CONTACT:

For further information on the CERCLA/NEPA ROD at Fernald, contact: Mr. Gary Stegner, Public Affairs Specialist, Fernald Area Office, U.S. Department of Energy, P.O. Box 538705, Cincinnati, Ohio 45253–8705, (513) 648–3014.

For further information on the DOE NEPA process, contact: Ms. Carol M. Borgstrom, Director, Office of NEPA Oversight, EH–25, U.S. Department of Energy, 1000 Independence Ave, SW., Washington, D.C. 20585, (202) 586–4600 or (800) 472–2756.

Issued in Washington, D.C., this 30th day of December, 1994.

Clyde Frank,

Acting Assistant Secretary for Environmental Management.

SUPPLEMENTARY INFORMATION: The following is the *verbatim* Declaration Statement of the joint CERCLA/NEPA ROD for Remedial Actions at OU4 at Fernald, Ohio.

Site Name and Location

Fernald Environmental Management Project (FEMP) Site—Operable Unit 4, Fernald, Hamilton County, Ohio

Statement of Basis and Purpose

This decision document presents the selected remedial action for Operable Unit 4 of the Fernald Site in Fernald, Ohio. This remedial action was selected in accordance with the Comprehensive Environmental Response, Compensation, and Liability Act (CERCLA), as amended by the Superfund Amendments and Reauthorization Act of 1986 (SARA), and to the extent practicable 40 Code of Federal Regulations (CFR) Part 300, the National Oil and Hazardous Substances Pollution Contingency Plan (NCP).

For Operable Unit 4 at the FEMP, DOE has chosen to complete an integrated CERCLA/NEPA process. This decision was based on the longstanding interest on the part of local stakeholders to prepare an Environmental Impact Statement (EIS) on the restoration activities at the FEMP and on the recognition that the draft document was issued and public comments received. Therefore, this single document is intended to serve as DOE's ROD for Operable Unit 4 under both CERCLA and NEPA; however, it is not the intent of the DOE to make a statement on the legal applicability of NEPA to CERCLA actions.

The decision presented herein is based on the information available in the administrative record for Operable Unit 4 and maintained in accordance with CERCLA. The major documents prepared through the CERCLA process include the Remedial Investigation (RI), the Feasibility Study (FS), and the Proposed Plan (PP) for Operable Unit 4. The FS and the PP also comprised DOE's draft EIS and were made available for public review and comment. This decision is also based on the public hearing held on March 21, 1994, in Harrison, Ohio, and the public meeting held on May 11, 1994, in Las Vegas, Nevada following the issuance of the Feasibility Study/Proposed Plan-Draft Environmental Impact Statement (FS/PP–DEIS). DOE has considered all comments received during the public comment period on the FS/PP–DEIS and following issuance of the final EIS in the preparation of this ROD.

The State of Ohio concurs with the remedy and the applicable or relevant and appropriate requirements (ARARs) put forth in this ROD for Operable Unit 4.

Assessment of the Site

Actual or threatened releases of hazardous substances from Operable Unit 4, if not addressed by implementing the response action selected in this ROD, may present an imminent and substantial endangerment to public health, welfare, or the environment.

Description of the Remedy

This is the selected remedial action for Operable Unit 4, one of five operable units at the FEMP. The materials within Operable Unit 4 exhibit a wide range of properties. Most notable would be the elevated direct radiation associated with the K–65 residues versus the much lower direct radiation associated with cold metal oxides in Silo 3. Even more significant would be the much lower levels of contamination associated with the soils and building materials, like concrete, within the Operable Unit 4 Study Area. To account for these differences and for the varied cleanup alternatives applying to each waste type, Operable Unit 4 was segmented into three subunits. These subunits are described as follows:

Subunit A: Silos 1 and 2 contents (K–65 residues and bentonite clay) and the sludge in the decant sump tank

Subunit B: Silo 3 contents (cold metal oxides)

Subunit C: Silos 1, 2, 3, and 4 structures; contaminated soils within the Operable Unit 4 boundary, including surface and subsurface soils and the earthen berm around Silos 1 and 2; the decant sump tank; the radon treatment system; the concrete pipe trench and the miscellaneous concrete structures within Operable Unit 4, any debris (i.e., concrete, piping, etc.) generated through implementing cleanup for Subunits A and B, and any perched groundwater encountered during remedial activities.

On the basis of the evaluation of final alternatives, the selected remedy addressing Operable Unit 4 at the FEMP is a combination of Alternatives 3A.1/Vit—Removal, Vitrification, and Off-site Disposal—Nevada Test Site (NTS); 3B.1/Vit—Removal, Vitrification, and Off-site Disposal—NTS; and 2C—Demolition, Removal and On-Property Disposal. These alternatives apply to Subunits A, B, and C respectively. The major components of the selected remedy include:

- Removal of the contents of Silos 1, 2, and 3 (K–65 residues and cold metal oxides) and the decant sump tank sludge.
- Vitrification (glassification) to stabilize the residues and sludges removed from the silos and decant sump tank.
- Off-site shipment for disposal at the NTS of the vitrified contents of Silos 1, 2, 3, and the decant sump tank.
- Demolition of Silos 1, 2, 3, and 4 and decontamination, to the extent practicable, of the concrete rubble, piping, and other generated construction debris.
- Removal of the earthen berms and excavation of contaminated soils within the boundary of Operable Unit 4, to achieve remediation levels. Placement of clean backfill to original grade following excavation.
- Demolition of the vitrification treatment unit and associated facilities after use. Decontamination or recycling of debris prior to disposition.
- On-property interim storage of excavated contaminated soils and contaminated debris in a manner consistent with the approved Work Plan for Removal Action 17 (improved storage of soil and debris) pending final disposition in accordance with the

Records of Decision for Operable Units 5 and 3, respectively.

- Continued access controls and maintenance and monitoring of the stored wastes inventories.
- Institutional controls of the Operable Unit 4 area such as deed and land use restrictions.
- Potential additional treatment of stored Operable Unit 4 soil and debris using Operable Unit 3 and 5 waste treatment systems.
- Pumping and treatment as required of any contaminated perched groundwater encountered during remedial activities.
- Disposal of Operable Unit 4 contaminated debris and soils consistent with the Records of Decision for Operable Units 3 and 5, respectively.

The remedy specifies off-site disposal of vitrified contents of Silos 1, 2 and 3 at the NTS. At the time of the signing of this ROD, The Department of Energy—Nevada Operations Office (DOE–NV) is in the process of preparing a site-wide environmental impact statement (EIS) under NEPA for the NTS. Shipments of Operable Unit 4 vitrified waste are not proposed to begin until after the planned completion of the EIS for the NTS.

The planned date of completion of the EIS for the NTS is December 1995, at which time a Record of Decision is expected to be issued. Shipments of low-level waste generated from the remediation of Operable Unit 4 are not proposed to begin until mid-1997, which should be after the planned completion of the NTS site-wide EIS. Given these timeframes, DOE does not anticipate the NTS EIS schedule will negatively impact the Operable Unit 4 remediation schedule discussed in the ROD.

The containerized vitrified product will require interim storage at the FEMP prior to its transportation to the NTS for disposal. The purpose of this interim storage is two-fold; first, the vitrified product will require verification sampling in order to certify that each production lot has met specific performance and waste disposal criteria; and second, to provide the Fernald waste shipping program a buffer staging area where the material can be safely managed prior to its shipment to NTS in accordance with DOE as low as reasonably achievable (ALARA) principles, ARARs identified and included in the Operable Unit 4 ROD, as well as in a manner protective of human health and the environment. It has been anticipated that the interim storage area will be needed to accommodate the interim handling of approximately 90 days of vitrification production.

The decision regarding the final disposition of the remaining Operable Unit 4 contaminated soil and debris will be placed in abeyance, until completion of the Records of Decision for Operable Units 3 and 5 remedial actions, in order to take full advantage of planned and in progress waste minimization treatment processes by these operable units. Further, this strategy enables the integration of disposal decisions for contaminated soils and debris on a site-wide basis.

In the unlikely event unforeseen circumstances preclude the integration of Operable Unit 4 soil and debris into the Operable Unit 3 and/or Operable Unit 5 treatment and disposal decisions, the disposal decision for Operable Unit 4 contaminated soils and debris will be documented in a ROD amendment for Operable Unit 4 in accordance with Section 117(c) of CERCLA and United States Environmental Protection Agency (EPA) guidance. The ROD amendment will provide the public and the EPA further opportunity to review and comment on the final disposal option for Operable Unit 4 soils and debris. A ROD amendment to the Operable Unit 4 ROD will not be necessary in the event the Operable Unit 3 remedy for debris and the Operable Unit 5 remedy for contaminated soils can be feasibly implemented for Operable Unit 4.

In reaching the decision to implement this remedial alternative, DOE evaluated other alternatives for each subunit, in addition to no action. The other alternatives are: (a) Subunit A—Silos 1 and 2 Contents: (1) Removal, Cement Stabilization, Off-Site Disposal at Nevada Test Site; (b) Subunit B—Silo 3 Contents: (1) Removal, Vitrification, On-Property Disposal; (2) Removal, Cement Stabilization, On-Property Disposal; (3) Removal, Cement Stabilization, Off-Site Disposal at Nevada Test Site; (c) Subunit C—Silos 1, 2, 3, and 4 Structures, Soils, and Debris: (1) Demolition, Removal, Off-Site Disposal at Nevada Test Site; (2) Demolition, Removal, Off-Site Disposal at Permitted Commercial Facility.

A description of the alternatives is provided in the Decision Summary of the ROD, hereby incorporated by reference for DOE's NEPA ROD, and is available in the Administrative Record. CERCLA's nine criteria set forth in 40 CFR Part 300, the National Oil and Hazardous Substances Pollution Contingency Plan were used to evaluate the alternatives. The selected remedy represents the best balance among the alternatives with respect to these criteria and is the environmentally preferable alternative.

The preferred alternative for Operable Unit 4 provides the best performance when compared with the other alternatives, with respect to the evaluation criteria. This remedy will achieve substantial risk reduction by removing the sources of contamination, treating the material which poses the highest risk, shipping the treated residues off-site for disposal, managing the remaining contaminated soils and debris consistent with the site-wide strategy. The selected treatment alternative both reduces the mobility of the hazardous constituents and results in significant reduction in the volume of materials requiring disposal. The selected remedy also provides the highest degree of long-term protectiveness for human health and the environment.

Statutory Determinations

The selected remedy is protective of human health and the environment, complies with Federal and State requirements that are legally applicable or relevant and appropriate to the remedial action, and is cost effective. This remedy utilizes permanent solutions and alternative treatment (or resource recovery) technologies to the maximum extent practicable, and satisfies the statutory preference for remedies that employ treatment, and also reduce toxicity, mobility, or volume as a principal element. This remedy will result in contaminated debris and soil being dispositioned by Operable Units 3 and 5, respectively. Because this remedy will result in hazardous substances (i.e., contaminated soil and debris) remaining on site, above health-based levels, a review will be conducted every five years after commencement of remedial action to ensure that the remedy continues to provide adequate protection of human health and the environment.

All practical means to avoid or minimize environmental harm from implementation of the selected remedy have been adopted. During excavation activities, sediment controls will be implemented to eliminate potential surface water runoff and sediment deposition to Paddys Run. Final site layout and design will include all practicable means (e.g., sound engineering practices and proper construction practices) to minimize environmental impacts.

[FR Doc. 95–345 Filed 1–5–95; 8:45 am]

BILLING CODE 6450–01–P

Advisory Committee on Human Radiation Experiments

AGENCY: U.S. Department of Energy.

ACTION: Notice of open meeting.

SUMMARY: Under the provisions of the Federal Advisory Committee Act (Pub. L. No. 92-463,86 Stat. 770), notice is hereby given of the following meeting:

DATE AND TIME:

January 19, 1995, 9:00 a.m. - 5:00 p.m.
January 20, 1995, 8:00 a.m. - 4:30 p.m.

PLACE: Omni Shoreham Hotel, 2500 Calvert Street, N.W., Washington, D.C.

FOR FURTHER INFORMATION CONTACT: Steve Klaidman, Advisory Committee on Human Radiation Experiments, 1726 M Street, NW, Suite 600, Washington, DC 20036. Telephone: (202) 254-9795 Fax:(202) 254-9828

SUPPLEMENTARY INFORMATION:

Purpose of the Committee

The Advisory Committee on Human Radiation Experiments was established by the President, Executive Order No. 12891, January 15, 1994, to provide advice and recommendations on the ethical and scientific standards applicable to human radiation experiments carried out or sponsored by the United States Government. The Advisory Committee on Human Radiation Experiments reports to the Human Radiation Interagency Working Group, the members of which include the Secretary of Energy, the Secretary of Defense, the Secretary of Health and Human Services, the Secretary of Veterans Affairs, the Attorney General, the Administrator of the National Aeronautics and Space Administration, the Director of Central Intelligence, and the Director of the Office of Management and Budget.

Tentative Agenda

Thursday, January 19, 1995
9:00 a.m. Call to Order and Opening Remarks
9:10 a.m. Discussion, Committee Strategy and Direction
12:15 p.m. Lunch
1:30 p.m. Discussion, Committee Strategy and Direction (continued)
5:00 p.m. Meeting Adjourned
Friday, January 20, 1995
8:00 a.m. Opening Remarks
8:05 a.m. Public Comment
10:00 a.m. Discussion, Committee Strategy and Direction
11:45 a.m. Lunch
1:15 p.m. Discussion, Committee Strategy and Direction (continue)
4:30 p.m. Meeting Adjourned

A final agenda will be available at the meeting.

Public Participation

The meeting is open to the public. The chairperson is empowered to conduct the meeting in a fashion that will facilitate the orderly conduct of business. Any member of the public who wishes to file a written statement with the

Advisory Committee will be permitted to do so, either before or after the meeting. Members of the public who wish to make a five-minute oral statement should contact Kristin Crotty of the Advisory Committee at the address or telephone number listed above. Requests must be received at least five business days prior to the meeting and reasonable provisions will be made to include the presentation on the agenda. This notice is being published less than 15 days before the date of the meeting due to programmatic issues that had to be resolved prior to publication.

Transcript

Available for public review and copying at the office of the Advisory Committee at the address listed above between 9 a.m. and 4 p.m., Monday through Friday, except Federal holidays.

Dated: January 3, 1995.

Rachel Murphy Samuel,

Acting Deputy Advisory Committee Management Officer.

[FR Doc. 95–346 Filed 1-5-95; 8:45 am]

BILLING CODE 6450-01-P

Federal Energy Regulatory Commission

[Docket No. CP95–136–000]

Florida Gas Transmission Co.; Notice of Request Under Blanket Authorization

December 30, 1994.

Take notice that on December 27, 1994, Florida Gas Transmission Company (FGT), 1400 Smith Street, Houston, Texas 77002, filed in Docket No. CP95–136–000 a request pursuant to Sections 157.205 and 157.212 of the Commission's Regulations under the Natural Gas Act (18 CFR 157.205 and 157.212) for authorization to construct and operate a new bi-directional meter station and approximately 800 feet of 12-inch lateral line connecting to FGT's 30-inch mainline in Mobile County, Alabama, to accommodate natural gas deliveries to and from Bay Gas Storage Company, Ltd. (Bay Gas), under FGT's blanket certificate issued in Docket No. CP82–553–000 pursuant to Section 7 of the Natural Gas Act, all as set forth in the request which is on file with the Commission and open to public inspection.

FGT states that Bay Gas has requested FGT to construct and operate a new bi-directional meter station and approximately 800 feet of 12-inch lateral to accommodate the transportation of natural gas, to and from Bay Gas's existing 20-inch pipeline that leads to the McIntosh underground storage cavern. FGT states that the maximum gas quantity that FGT will deliver into the subject meter station is 75,000 MMBtu per day; and 27,375,000 MMBtu per year. FGT states that the proposed gas quantity has no incremental affect on FGT and therefore, will not impact its peak day and annual gas deliveries. FGT states that Bay Gas shall reimburse FGT for all construction costs; approximately $285,000.

Any person or the Commission's staff may, within 45 days after issuance of the instant notice by the Commission, file pursuant to Rule 214 of the Commission's Rules of Practice and Procedure (18 CFR 385.214) a motion to intervene or notice of intervention and pursuant to Section 157.205 of the Regulations under the National Gas Act (18 CFR 157.205) a protest to the request. If no protest is filed within the time allowed therefor, the proposed activity is deemed to be authorized effective on the day after the time allowed for filing a protest. If a protest is filed and not withdrawn within 30 days after the time allowed for filing a protest, the instant request shall be treated as an application for authorization pursuant to Section 7 of the Natural Gas Act.

Lois D. Cashell,

Secretary.

[FR Doc. 95–274 Filed 1–5–95; 8:45 am]

BILLING CODE 6717–01–M

[Docket No. ER95–297–000, et al.]

PECO Energy Company, et al.; Electric Rate and Corporate Regulation Filings

December 30, 1994.

Take notice that the following filings have been made with the Commission:

1. PECO Energy Company

[Docket No. ER95–297–000]

Take notice that on December 20, 1994, PECO Energy Company (PECO), tendered for filing an agreement between PECO and Louis Dreyfus Electric Power Inc. (LDEP) dated September 23, 1994.

PECO states that the Agreement sets forth the terms and conditions for the sale of system energy which it expects to have available for sale from time to

time and the purchase of which will be economically advantageous to LDEP. PECO requests that the Commission permit the agreement to become effective in sixty days from the date of filing.

PECO states that a copy of this filing has been sent to LDEP and will be furnished to the Pennsylvania Public Utility Commission.

Comment date: January 13, 1995, in accordance with Standard Paragraph E at the end of this notice.

2. Central Vermont Public Service Corporation

[Docket No. ER95–298–000]

Take notice that on December 20, 1994, Central Vermont Public Service Corporation (Central Vermont), tendered for filing Service Agreements with InterCoast Power Marketing company and Catex Vitol Electric Inc. under its FERC Electric Tariff No. 5. The tariff provides for the sale by Central Vermont of power and energy at or below Central Vermont's fully allocated costs.

Central Vermont requests waiver of the Commission's regulations to permit the service agreement to become effective on December 22, 1994.

Comment date: January 13, 1995, in accordance with Standard Paragraph E at the end of this notice.

3. Wisconsin Electric Power Company

[Docket No. ER95–299–000]

Take notice that on December 16, 1994, Wisconsin Electric Power Company (Wisconsin Electric), tendered for filing a revision to the Interconnection and Interchange Agreement between itself and Wisconsin Power and Light Company (WP&L). The Agreement was accepted for filing by letter dated September 16, 1994 (Docket No. ER94–1347–000).

Wisconsin Electric and WP&L have determined that the Centerville Interconnection is no longer required. Wisconsin Electric shall remove all necessary metering equipment and related facilities. The parties request an effective date sixty days after filing.

Copies of the filing have been served on WP&L, and the Public Service Commission of Wisconsin.

Comment date: January 13, 1995, in accordance with Standard Paragraph E at the end of this notice.

4. Wickland Power Services

[Docket No. ER95–300–000]

Take notice that on December 20, 1994, Wickland Power Services (WPS), tendered for filing pursuant to Rules 205 and 207 of the Commission's Rules of Practice and Procedure, 18 CFR 385.205 and 385.207, a petition for waivers and blanket approvals under various regulations of the Commission, and an order accepting its Rate Schedule No. 1, to be effective the earlier of February 18, 1995, or the date of a Commission order granting approval of this Rate Schedule.

WPS intends to engage in electric power and energy transactions as a marketer and broker. In transactions where WPS purchases power, including capacity and related services from electric utilities, qualifying facilities and independent power producers, and resells such power to other purchasers, WPS will be functioning as a marketer. In WPS's marketing transactions, WPS proposes to charge rates mutually agreed upon by the parties. In transactions where WPS does not take title to the electric power and/or energy, WPS will be limited to the role of a broker and will charge a fee for its services. WPS is not in the business of producing or transmitting electric power. WPS does not currently have or contemplate acquiring title to any electric power transmission facilities.

Rate Schedule No. 1 provides for the sale of energy and capacity at agreed prices.

Comment date: January 13, 1995, in accordance with Standard Paragraph E at the end of this notice.

5. Florida Power & Light Company

[Docket No. ER95–301–000]

Take notice that on December 20, 1994, Florida Power & Light Company (FPL), tendered for filing proposed Service Agreements with Louis Dreyfus Electric Power Inc. for transmission service under FPL's Transmission Tariff Nos. 2 and 3.

FPL requests that the proposed Service Agreements be permitted to become effective on January 20, 1995, or as soon thereafter as practicable.

FPL states that this filing is in accordance with Part 35 of the Commission's regulations.

Comment date: January 13, 1995, in accordance with Standard Paragraph E at the end of this notice.

6. Florida Power & Light Company

[Docket No. ER95–302–000]

Take notice that on December 20, 1994, Florida Power & Light Company (FPL), tendered for filing proposed Service Agreements with Fort Pierce Utilities Authority for transmission service under FPL's Transmission Tariff Nos. 2 and 3.

FPL requests that the proposed Service Agreements be permitted to become effective on January 1, 1995, or as soon thereafter as practicable.

FPL states that this filing is in accordance with Part 35 of the Commission's regulations.

Comment date: January 13, 1995, in accordance with Standard Paragraph E at the end of this notice.

7. Florida Power Corporation

[Docket No. ER95–303–000]

Take notice that on December 20, 1994, Florida Power Corporation (FPC), tendered for filing a service agreement for transmission service resale with Louis Dreyfus Electric Power Inc. under Florida Power's existing T–1 Transmission Tariff. This involves transmission service to be provided to Louis Dreyfus Electric Power at all existing and future interconnection of FPC.

FPC requests a waiver of the Commission's 60-day notice requirement to allow FPC and Enron's Agreement to become effective December 21, 1994.

Comment date: January 13, 1995, in accordance with Standard Paragraph E at the end of this notice.

8. Florida Power Corporation

[Docket No. ER95–304–000]

Take notice that on December 20, 1994, Florida Power Corporation (FPC), tendered for filing a service agreement for transmission service resale with Enron Power Marketing, Inc. under Florida Power's existing T–1 Transmission Tariff. This involves transmission service to be provided to Enron at all existing and future interconnections of FPC.

FPC requests a waiver of the Commission's 60-day notice requirement to allow FPC and Enron's Agreement to become effective December 21, 1994.

Comment date: January 13, 1995, in accordance with Standard Paragraph E at the end of this notice.

9. Transco Power Trading Company

[Docket No. ER95–305–000]

Take notice that on December 20, 1994, Transco Power Trading Company (TPT), tendered for filing pursuant to Rule 205, 18 CFR 385.205, an application for waivers and blanket approvals under various regulations of the Commission and for an order accepting its FERC Electric Rate Schedule No. 1 to be effective on the earlier of February 18, 1995 or the date of the Commission's order herein.

TPT is a subsidiary of Transco Gas Marketing Company, with its principal place of business at 9821 Katy Freeway, Houston, Texas 77024. TPT intends to engage in electric power and energy

transactions as a marketer and a broker. In transactions where TPT sells electric energy, it proposes to make such sales at rates, terms, and conditions to be mutually agreed upon with the purchasing party, TPT is not in the business of generating, transmitting, or distributing electric power.

Comment date: January 13, 1995, in accordance with Standard Paragraph E at the end of this notice.

10. William R. Gregory

[Docket No. ID–2861–000]

Take notice that on December 16, 1994, William R. Gregory (Applicant), tendered for filing a supplemental application under Section 305(b) of the Federal Power Act to hold the following positions:

President, CEO and Director, Edison Sault Electric Co. (Edison)

Director, First of America Bank-Michigan, N.A. (FABM)

Director, First of America Bank-Northern Michigan (FABNM)

Comment date: January 13, 1995, in accordance with Standard Paragraph E at the end of this notice.

11. Tenaska III Texas Partners

[Docket No. QF88–295–006]

On December 21, 1994, Tenaska III Texas Partners (Tenaska), tendered for filing an amendment to its filing in this docket.

The amendment pertains to information relating to the ownership structure of Tenaska's cogeneration facility. No determination has been made that the submittal constitutes a complete filing.

Comment date: January 18, 1995, in accordance with Standard Paragraph E at the end of this notice.

Standard Paragraphs:

E. Any person desiring to be heard or to protest said filing should file a motion to intervene or protest with the Federal Energy Regulatory Commission, 825 North Capitol Street, N.E., Washington, D.C. 20426, in accordance with Rules 211 and 214 of the Commission's Rules of Practice and Procedure (18 CFR 385.211 and 18 CFR 385.214). All such motions or protests should be filed on or before the comment date. Protests will be considered by the Commission in determining the appropriate action to be taken, but will not serve to make protestants parties to the proceeding. Any person wishing to become a party must file a motion to intervene. Copies of this filing are on file with the Commission and are available for public inspection.

Lois D. Cashell,

Secretary.

[FR Doc. 95–320 Filed 1–5–95; 8:45 am]

BILLING CODE 6717–01–P

[Docket No. ER95–309–000]

Appalachian Power Company; Notice of Filing

December 30, 1994.

Take notice that on December 21, 1994, Appalachian Power Company (APCo), tendered for filing with the Commission new Electric Service Agreements that were executed on December 1, 1994, by APCo and its following wholesale customers.

a. Black Diamond Power Company—East Hartland
b. Black Diamond Power Company—Elkhurst
c. Black Diamond Power Company—Sophia
d. Elk Power Company—Clay
e. Elk Power Company—Reed's Fork
f. Elkhom Public Service Company—Crozier #4
g. Elkhom Public Service Company—Elkhom
h. Kimball Light & Water Company
i. Union Power Company—Mullens
j. Union Power Company—Pierpont
k. Union Power Company—Rhodell
l. United Light & Power Company
m. War Light & Power Company

The agreements are intended to replace the existing service agreements between APCo and the companies listed above, which expired on November 30, 1994.

APCo proposes an effective date of December 1, 1994, and states that a copy of its filing was served on the affected customers and the Public Service Commission of West Virginia.

Any person desiring to be heard or to protest said filing should file a motion to intervene or protest with the Federal Energy Regulatory Commission, 825 North Capitol Street, N.E., Washington, D.C. 20426, in accordance with Rules 211 and 214 of the Commission's Rules of Practice and Procedure (18 CFR 385.211 and 18 CFR 385.214). All such motions or protests should be filed on or before January 13, 1995. Protests will be considered by the Commission in determining the appropriate action to be taken, but will not serve to make protestants parties to the proceeding. Any person wishing to become a party must file a motion to intervene. Copies of this filing are on file with the Commission and are available for public inspection.

Lois D. Cashell,

Secretary.

[FR Doc. 95–323 Filed 1–5–95; 8:45 am]

BILLING CODE 6717–01–M

[Docket Nos. ER94–1505–000, ER95–42–000, ER95–70–000 and ER95–81–000]

Illinois Power Company; Notice of Filing

December 30, 1994.

Take notice that on December 21, 1994, Illinois Power Company (IPC), tendered for filing an amendment to the agreements between IPC, Louis Dreyfus Electric Power Inc., Electric Clearinghouse, Inc., AES Power, Inc. and Enron Power Marketing, Inc. in the dockets listed above. IPC states that the purpose of this amendment is to revise the charges when IPC is buying from a third party and selling to any of the above parties.

Any person desiring to be heard or to protest said filing should file a motion to intervene or protest with the Federal Energy Regulatory Commission, 825 North Capitol Street, N.E., Washington, D.C. 20426, in accordance with Rules 211 and 214 of the Commission's Rules of Practice and Procedure (18 CFR 385.211 and 18 CFR 385.214). All such motions or protests should be filed on or before January 13, 1995. Protests will be considered by the Commission in determining the appropriate action to be taken, but will not serve to make protestants parties to the proceeding. Any person wishing to become a party must file a motion to intervene. Copies of this filing are on file with the Commission and are available for public inspection.

Lois D. Cashell,

Secretary.

[FR Doc. 95–322 Filed 1–5–95; 8:45 am]

BILLING CODE 6717–01–M

[Docket No. ER95–306–000]

Northeast Utilities Service Company; Notice of Filing

December 30, 1994.

Take notice that on December 20, 1994, Northeast Utilities Service Company (NUSCO), on behalf of The Connecticut Light and Power Company, Western Massachusetts Electric Company, Holyoke Water Power Company, Holyoke Power and Electric Company, and Public Service Company of New Hampshire, tendered for filing: Agreement Regarding Transmission and Interconnection Arrangements For The

Altresco Pittsfield Cogeneration Plant, between NUSCO and Altresco Pittsfield Limited Partnership (Altresco); Transmission Tariff 1 and 2 Service Agreements, between NUSCO and Altresco; and Altresco Pittsfield, L.P. Tax Indemnity Agreement, between NUSCO and Altresco.

In this filing, NUSCO requests that: (1) The Transmission Tariff 1 Service Agreement supersede the Firm Transmission Service Agreement between NUSCO and New England Power Company (NEP), and that the Firm Transmission Service Agreement be terminated as of the effective of the Tariff 1 Service Agreement; and 92) the Transmission Tariff 2 Service Agreement supersede the Non-Firm Transmission Service Agreement between NUSCO and NEP, and that the Non-Firm Transmission Service Agreement be terminated as of the effective date of the Tariff 2 Service Agreement.

NUSCO states that this filing is in accordance with Part 35 of the Commission's regulations.

Any person desiring to be heard or to protest said filing should file a motion to intervene or protest with the Federal Energy Regulatory Commission, 825 North Capitol Street, N.E., Washington, D.C. 20426, in accordance with Rules 211 and 214 of the Commission's Rules of Practice and Procedure (18 CFR 385.211 and 18 CFR 385.214). All such motions or protests should be filed on or before January 13, 1995. Protests will be considered by the Commission in determining the appropriate action to be taken, but will not serve to make protestants parties to the proceeding. Any person wishing to become a party must file a motion to intervene. Copies of this filing are on file with the Commission and are available for public inspection.

Lois D. Cashell,

Secretary.

[FR Doc. 95–324 Filed 1–5–95; 8:45 am]

BILLING CODE 6717–01–M

[Docket No. FA92–8–000]

Pennsylvania Power & Light Company; Order Establishing Hearing Procedures

December 30, 1994.

On November 8, 1994, the Chief Accountant issued a letter under delegated authority noting Pennsylvania Power & Light Company's (PP&L) disagreement with respect to certain recommendations of the Division of Audits.[1] PP&L was requested to advise whether it would agree to the disposition of the contested matters under the shortened procedures provided for by Part 41 of the Commission's Regulations. 18 CFR Part 41.

By letter dated December 6, 1994, PP&L responded that it did not consent to the shortened procedures. Section 41.7 of the Commission's Regulations provides that in case consent to the shortened procedures is not given, the proceeding will be assigned for hearing. Accordingly, the Secretary, under authority delegated by the Commission, will set the matters for hearing.

Any interested person seeking to participate in this docket shall file a protest or motion to intervene pursuant to Rules 211 and 214 of the Commission's Rules of Practice and Procedure (18 CFR 385.211 and 385.214) no later than 15 days after the date of publication of this order in the **Federal Register.**

It is ordered:

(A) Pursuant to the authority contained in and subject to the jurisdiction conferred upon the Federal Energy Regulatory Commission by section 402(a) of the Department of Energy Organization Act, the provisions of the Federal Power Act, particularly sections 205, 206, and 301 thereof, and pursuant to the Commission's Rules of Practice and Procedures (18 CFR Chapter I), a public hearing shall be held concerning the appropriateness of PP&L's practices as referred to above.

(B) A Presiding Administrative Law Judge, to be designated by the Chief Administrative Law Judge, shall convene a prehearing conference in this proceeding, to be held within 45 days of the date of this order, in a hearing room of the Federal Energy Regulatory Commission 810 First Street, N.E., Washington, D.C. 10416. The Presiding Judge is authorized to establish procedural dates and to rule on all motions (except motions to dismiss) as provided in the Commission's Rules of Practice and Procedure.

(C) This order shall be published in the **Federal Register.**

Lois D. Cashell,

Secretary.

[FR Doc. 95–325 Filed 1–5–95; 8:45 am]

BILLING CODE 6717–01–M

[1] 69 FERC ¶ 62, 135. The contested matters are the three items discussed in Part I of the letter order.

[Project Nos. 11077–001, et al.]

Hydroelectric Applications [Alaska Power and Telephone Co., et al.]; Notice of Applications

Take notice that the following hydroelectric applications have been filed with the Commission and are available for public inspection:

1a. *Type of application:* Major License.

b. *Project No.:* 11077–001.

c. *Date filed:* May 31, 1994.

d. *Applicant:* Alaska Power and Telephone Company.

e. *Name of project:* Goat Lake.

f. *Location:* At the existing Goat Lake, near Skagway, Alaska. Sections 10, 11, 14, 15, and 16, Township 27 South, Range 60 West, CRM.

g. *Filed pursuant to:* Federal Power Act, 16 U.S.C. 791(a)–825(r).

h. *Applicant contact:* Mr. Robert S. Grimm, President, Alaska Power & Telephone Co., P.O. Box 222, Port Townsend, WA 98368, (206) 385–1733.

i. *FERC contact:* Héctor M. Pérez, (202) 219–2839

j. *Deadline for protests, interventions, competing applications and notices of intent:* February 13, 1995.

l. *Status of environmental analysis:* This application is not ready for environmental analysis at this time—see attached paragraph D8.

m. *Brief description of project:* The proposed project would consist of: (1) Goat Lake, with a surface area of 204 acres and a storage capacity of 5,460 acre-feet at surface elevation of 2,915 feet; (2) a submerged wedge wire screen intake at elevation 2,875 feet; (3) a 600-foot-long and 30-inch-diameter steel or HDPE siphon with a vacuum pump assembly; (4) a 6,200-foot-long and 22-inch-diameter steel penstock; (5) a powerhouse containing a 4-MW unit; (6) a 24.9-Kv and 3,400-feet-long transmission line; and (7) other appurtenances.

n. *This notice also consists of the following standard paragraph:* A2, A9, B1, and D8.

o. *Available locations of application:* A copy of the application, as amended and supplemented, is available for inspection and reproduction at the Commission's Public Reference and Files Maintenance Branch, located at 941 North Capitol Street, N.E., Room 3104, Washington, D.C. 20426, or by calling (202) 208–1371. A copy is also available for inspection and reproduction at the address shown in item h above.

2a. *Type of application:* Amendment of License.

b. *Project No.:* 2016–022.

c. *Date filed:* October 24, 1994.
d. *Applicant:* City of Tacoma.
e. *Name of project:* Cowlitz River Hydroelectric Project.
f. *Location:* On the Cowlitz River, Lewis County, Washington.
g. *Filed pursuant to:* Section 23(b) of the Federal Power Act, 16 U.S.C. 817(b).
h. *Applicant contact:* Paul H. Svoboda, City of Tacoma, P.O. Box 11007, Tacoma, WA 98411, (206) 502–8340.
i. *FERC contact:* Steve Hocking, (202) 219–2656.
j. *Comment date:* January 30, 1995.
k. *Description of amendment:* The City of Tacoma (City) filed an application to amend its license for the Cowlitz River Hydroelectric Project. The application seeks Commission approval of a settlement agreement between the City, the Washington Department of Fish and Wildlife, and the U.S. Fish and Wildlife Service. In the agreement, the City and agencies agree to provisions for acquiring, improving, and maintaining about 14,000 acres of wildlife mitigation lands, most of which are near the project. The City applies to have these lands included in the project boundary.
l. *This notice also consists of the following standard paragraphs:* B, C1, and D2.

3a. *Type of application:* Minor License—Existing (Notice of Tendering).
b. *Project No.:* 11509–000.
c. *Date filed:* December 5, 1994.
d. *Applicant:* City of Albany, Oregon.
e. *Name of project:* City of Albany, Oregon Hydroelectric Project.
f. *Location:* On the South Santiam, Calapooia, and Willamette Rivers, and the Albany-Santiam Canal in Linn County, Oregon near the towns of Albany and Lebanon. T12S, R1W, section 19; T12S, R2W, sections 2, 3, 11, 23 and 24; T11S, R3W, sections 6, 7, 15, 18, and 20–25; T11S, R2W, section 12; T11S, R4W, section 12.
g. *Filed pursuant to:* Federal Power Act, 16 U.S.C. 791(a)–825(r).
h. *Applicant contact:* Laura L. Hudson, Project Manager, David Evans and Associates, Inc., 2828 SW Corbett Avenue, Portland, Oregon 97201–4830, (503) 223–6663;Richard M. Glick, Project Counsel, Davis Wright Tremaine, 2300 First Interstate Tower, 1300 SW Fifth Avenue, Portland, OR 97201–5682, (503) 241–2300.
i. *FERC contact:* Ms. Deborah Frazier-Stutely, (202) 219–2842.
j. *Brief description of existing project:* The existing project consists of: (1) the 450-foot-long, 6-foot-high existing Lebanon Dam, on the South Santiam River; (2) an unscreened canal inlet and headgate; (3) the 18-mile-long Albany-Santiam Canal; (4) a penstock intake with trashracks and a slide gate; (5) a 6-foot-diameter, 55-foot-long penstock; (6) a powerhouse containing two generating units with an installed capacity of 500 kilowatts; (7) a tailrace discharging project flows into the Calapooia River; and (8) related facilities.

The applicant proposes modifications to the existing project.

k. With this notice, we are initiating consultation with the State Historic Preservation Officer (SHPO), as required by § 106 of the National Historic Preservation Act, and the regulations of the Advisory Council on Historic Preservation, 36 CFR 800.4.

l. In accordance with section 4.32 (b)(7) of the Commission's regulations, if any resource agency, SHPO, Indian Tribe, or person believes that an additional scientific study should be conducted in order to form an adequate, factual basis for a complete analysis of this application on its merits, they must file a request for the study with the Commission, together with justification for such request, not later than 60 days from the filing date and serve a copy of the request on the Applicant.

4a. *Type of Application:* Preliminary Permit.
b. *Project No.:* 11504–000.
c. *Date filed:* November 1, 1994.
d. *Applicant:* Elsinore Valley Municipal Water District.
e. *Name of Project:* Lake Elsinore Pumped Storage.
f. *Location:* On Lake Elsinore, in Riverside County (near town of Elsinore), California; in the Cleveland National Forest. Sections 22 and 23, in Township 6 South, Range 5 West.
g. *Filed Pursuant to:* Federal Power Act, 16 USC §§ 791(a)–825(r)
h. *Applicant Contact:* Mr. John E. Hoagland, Elsinore Valley Municipal, Water District, 31315 Chaney Street, Lake Elsinore, CA 92531, (909) 674–3146.
i. *FERC Contact:* Surender M. Yepuri, P.E., (202) 218–2847.
j. *Comment Date:* March 1, 1995.
k. *Description of Project:* The proposed pumped storage project would consist of: (1) an upper reservoir (elevation 2,860 MSL) created by a 120-foot-high concrete-face rockfill type dam and a 50-foot-high rockfill type dike; (2) the existing Lake Elsinore reservoir with a pool elevation 1,249 MSL; (3) a high-head water conductor system which includes three penstock tunnels; (4) a 70-foot-wide, 350-foot-long, and 160-foot-high underground powerhouse containing three pump-turbine units with a total rated capacity of 80 MW; (5) an access tunnel from the powerhouse cavern to the surface; (6) a transmission line; and (7) appurtenant structures.

The lake bed of Lake Elsinore is owned by the City of Lake Elsinore, and the water rights to the lake water is owned by the Elsinore Valley Municipal District.

The project would generate an estimated 520 GWh of energy annually. The estimated cost of the studies to be conducted under the preliminary permit is $500,000. No new roads would be needed for conducting studies under the preliminary permit.

l. *Purpose of Project:* Project power would be sold to a local utility.
m. *This notice also consists of the following standard paragraphs:* A5, A7, A9, A10, B, C, and D2.

5a. *Type of Application:* Amendment of License.
b. *Project No.:* 803–039.
c. *Date Filed:* November 29, 1994.
d. *Applicant:* Pacific Gas and Electric Company.
e. *Name of Project:* De Sabla—Centerville.
f. *Location:* On Butte Creek and West Branch Feather River in Butte County, California.
g. *Filed Pursuant to:* Federal Power Act, §§ 791(a)–825(r).
h. *Applicant Contact:* Shan Bhattacharya, Manager, Pacific Gas and Electric Company, Hydro Generation Department, P. O. Box 770000, P10A, San Francisco, CA 94177, (415) 973–4603.
i. *FERC Contact:* Donald H. Wilt, (202) 219–2676.
j. *Comment Date:* February 6, 1995.
k. *Description of Amendment of License:* Pacific Gas and Electric Company proposes to amend its license by deleting all requirements associated with the construction of the New Centerville Powerhouse as authorized by Commission order issued January 31, 1992 (58 FERC ¶ 62,093). Pacific Gas and Electric Company states that it is not economically feasible to replace the existing Centerville Powerhouse and perform the capacity upgrade. Because the term of the license was extended for construction of the New Centerville Powerhouse, the term may be revised to reflect the deletion of the New Centerville Powerhouse.
l. *This notice also consists of the following standard paragraphs:* B, C1, and D2.

6a. *Type of Application:* Preliminary Permit.
b. *Project No.:* 11508–000.
c. *Date filed:* December 5, 1994.
d. *Applicant:* Alaska Power and Telephone Company.
e. *Name of Project:* Wolf Lake.
f. *Location:* On the Wolf Creek in Prince of Wales Island (S.E. Alaska), near the Association of Hollis, Alaska.

g. *Filed Pursuant to:* Federal Power Act, 16 USC §§ 791(a)–825(r).

h. *Applicant Contact:* Mr. Robert S. Grimm, President, Alaska Power & Telephone Co., P.O. Box 222, Port Townsend, WA 98368, (206) 385–1733.

i. *FERC Contact:* Héctor M. Pérez, (202) 219–2843.

j. *Comments Date:* March 7, 1995.

k. *Brief Description of Project:* The proposed project would consist of: (1) A 15-foot-high and 30-foot-long concrete or wood crib diversion structure and a screened intake a short distance downstream from the natural outlet of Wolf Lake; (2) a 24-inch-diameter and 7,000-foot-long penstock; (3) a prefabricated metal powerhouse with a 2.5-MW unit; (4) a 50-foot-long tailrace channel; (5) a 12.5-Kv transmission line; and (6) other appurtenances.

l. *This notice also consists of the following standard paragraph:* A5, A7, A9, A10, B, C, and D2.

m. *Available Locations of Application:* A copy of the application, as amended and supplemented, is available for inspection and reproduction at the Commission's Public Reference and Files Maintenance Branch, located at 941 North Capitol Street, NE., room 3104, Washington, DC 20426, or by calling (202) 208–1371. A copy is also available for inspection and reproduction at the address shown in item h above.

Standard Paragraph:

A2. *Development Application*—Any qualified applicant desiring to file a competing application must submit to the Commission, on or before the specified deadline date for the particular application, a competing development application, or a notice of intent to file such an application. Submission of a timely notice of intent allows an interested person to file the competing development application no later than 120 days after the specified deadline date for the particular application. Applications for preliminary permits will not be accepted in response to this notice.

A5. *Preliminary Permit*—Anyone desiring to file a competing application for preliminary permit for a proposed project must submit the competing application itself, or a notice of intent to file such an application, to the Commission on or before the specified comment date for the particular application (see 18 CFR 4.36). Submission of a timely notice of intent allows an interested person to file the competing preliminary permit application no later than 30 days after the specified comment date for the particular application. A competing preliminary permit application must conform with 18 CFR 4.30(b) (1) and (9) and 4.36.

A7. *Preliminary Permit*—Any qualified development applicant desiring to file a competing development application must submit to the Commission, on or before a specified comment date for the particular application, either a competing development application or a notice of intent to file such an application. Submission of a timely notice of intent to file a development application allows an interested person to file the competing application no later than 120 days after the specified comment date for the particular application. A competing license application must conform with 18 CFR 4.30(b) (1) and (9) and 4.36.

A9. *Notice of intent*—A notice of intent must specify the exact name, business address, and telephone number of the prospective applicant, and must include an unequivocal statement of intent to submit, if such an application may be filed, either a preliminary permit application or a development application (specify which type of application). A notice of intent must be served on the applicant(s) named in this public notice.

A10. *Proposed Scope of Studies under Permit*—A preliminary permit, if issued, does not authorize construction. The term of the proposed preliminary permit will be 36 months. The work proposed under the preliminary permit would include economic analysis, preparation of preliminary engineering plans, and a study of environmental impacts. Based on the results of these studies, the Applicant would decide whether to proceed with the preparation of a development application to construct and operate the project.

B. *Comments, Protests, or Motions to Intervene*—Anyone may submit comments, a protest, or a motion to intervene in accordance with the requirements of Rules of Practice and Procedure, 18 CFR 385.210, .211, .214. In determining the appropriate action to take, the Commission will consider all protests or other comments filed, but only those who file a motion to intervene in accordance with the Commission's Rules may become a party to the proceeding. Any comments, protests, or motions to intervene must be received on or before the specified comment date for the particular application.

B1. *Protests or Motions to Intervene*—Anyone may submit a protest or a motion to intervene in accordance with the requirements of Rules of Practice and Procedure, 18 CFR 385.210, 385.211, and 385.214. In determining the appropriate action to take, the Commission will consider all protests filed, but only those who file a motion to intervene in accordance with the Commission's Rules may become a party to the proceeding. Any protests or motions to intervene must be received on or before the specified deadline date for the particular application.

C. *Filing and Service of Responsive Documents*—Any filings must bear in all capital letters the title ''COMMENTS'', ''NOTICE OF INTENT TO FILE COMPETING APPLICATION'', ''COMPETING APPLICATION'', ''PROTEST'', ''MOTION TO INTERVENE'', as applicable, and the Project Number of the particular application to which the filing refers. Any of the above-named documents must be filed by providing the original and the number of copies provided by the Commission's regulations to: The Secretary, Federal Energy Regulatory Commission, 825 North Capitol Street, NE., Washington, DC 20426. An additional copy must be sent to Director, Division of Project Review, Federal Energy Regulatory Commission, Room 1027, at the above-mentioned address. A copy of any notice of intent, competing application or motion to intervene must also be served upon each representative of the Applicant specified in the particular application.

C1. *Filing and Service of Responsive Documents*—Any filings must bear in all capital letters the title ''COMMENTS'', ''RECOMMENDATIONS FOR TERMS AND CONDITIONS'', ''PROTEST'', OR ''MOTION TO INTERVENE'', as applicable, and the Project Number of the particular application to which the filing refers. Any of the above-named documents must be filed by providing the original and the number of copies provided by the Commission's regulations to: The Secretary, Federal Energy Regulatory Commission, 825 North Capitol Street, NE., Washington, DC 20426. A copy of any motion to intervene must also be served upon each representative of the Applicant specified in the particular application.

D2. *Agency Comments*—Federal, state, and local agencies are invited to file comments on the described application. A copy of the application may be obtained by agencies directly from the Applicant. If an agency does not file comments within the time specified for filing comments, it will be presumed to have no comments. One copy of an agency's must also be sent to the Applicant's representatives.

D8. *Filing and Service of Responsive Documents*—The application is not

ready for environmental analysis at this time; therefore, the Commission is not now requesting comments, recommendations, terms and conditions, or prescriptions.

When the application is ready for environmental analysis, the Commission will issue a public notice requesting comments, recommendations, terms and conditions, or prescriptions.

All filings must (1) bear in all capital letters the title ''PROTEST'' or ''MOTION TO INTERVENE,'' ''NOTICE OF INTENT TO FILE COMPETING APPLICATION,'' or ''COMPETING APPLICATION;'' (2) set forth in the heading the name of the applicant and the project number of the application to which the filing responds; (3) furnish the name, address, and telephone number of the person protesting or intervening; and (4) otherwise comply with the requirements of 18 CFR 385.2001 through 385.2005. Agencies may obtain copies of the application directly from the applicant. Any of these documents must be filed by providing the original and the number of copies required by the Commission's regulations to: The Secretary, Federal Energy Regulatory Commission, 825 North Capitol Street, NE., Washington, DC 20426. An additional copy must be sent to Director, Division of Project Review, Office of Hydropower Licensing, Federal Energy Regulatory Commission, room 1027, at the above address. A copy of any protest or motion to intervene must be served upon each representative of the applicant specified in the particular application.

Dated: December 30, 1994.

Lois D. Cashell,

Secretary.

[FR Doc. 95–272 Filed 1–5–95; 8:45 am]

BILLING CODE 6717–01–P

[Docket No. CP95–126–000, et al.]

Columbia Gas Transmission Corp., et al.; Natural Gas Certificate Filings

December 29, 1994.

Take notice that the following filings have been made with the Commission:

1. Columbia Gas Transmission Corporation

[Docket No. CP95–126–000]

Take notice that on December 21, 1994, Columbia Gas Transmission Corporation (Columbia), 1700 MacCorkle Avenue, S.E., Charleston, West Virginia 25314–1599, filed in Docket No. CP95–126–000 a request pursuant to Sections 157.205 and 157.211 of the Commission's Regulations under the Natural Gas Act (18 CFR 157.205) for authorization to construct and operate facilities for 8 new delivery points for existing firm transportation customers in Ohio and West Virginia, under Columbia's blanket certificate issued in Docket No. CP83–76–000, all as more fully set forth in the request which is on file with the Commission and open to public inspection.

Columbia proposes to construct and operate the facilities for the delivery of gas to Columbia Gas of Ohio, Inc. (COH) and Mountaineer Gas Company (Mountaineer), Columbia's existing customers, in order for COH to serve 3 residential customers and for Mountaineer to serve 5 residential customers. Columbia states that each of the 8 delivery points would be used for the delivery of 1.5 dt equivalent of gas per day and 150 dt equivalent on an annual basis. It is asserted that these volumes would be within COH's and Mountaineer's existing peak day and annual entitlements from Columbia. Columbia estimates the cost of installing the facilities at $150 apiece. It is stated that the delivery points would be used for the delivery of gas transported on a firm basis under Columbia's Part 284 blanket certificate, issued in Docket No. CP86–240–000.

Comment date: February 13, 1995, in accordance with Standard Paragraph G at the end of this notice.

2. Natural Gas Pipeline Company of America

[Docket No. CP95–127–000]

Take notice that on December 21, 1994, Natural Gas Pipeline Company of America (Natural), 701 East 22nd Street, Lombard, Illinois 60148, filed in Docket No. CP95–127–000 an application pursuant to Section 7(b) of the Natural Gas Act for permission and approval to abandon:

(1) an exchange service between Natural and Mobil Oil Corporation (Mobil) performed under Natural's Rate Schedule X–28 authorized in Docket No. CP71–163, as amended; and

(2) an exchange service between Natural and Mobil performed under Natural's Rate Schedule X–55 authorized in Docket No. CP71–316,

all as more fully set forth in the application on file with the Commission and open to public inspection.

Natural states that pursuant to a gas exchange agreement between Natural and Mobil (formerly Union Texas Petroleum) dated November 25, 1970 (1970 Agreement), as amended, Natural received exchange quantities of natural gas equal to fifty (50%) of the natural gas received by Natural from Mobil in the ROC field, Caprito Area, Ward County, Texas (up to approximately 20,000 Mcf of natural gas per day) and delivered equivalent quantities of natural gas to Mobil in Liberty County, Texas. Such exchange was performed under Natural's Rate Schedule X–28 authorized in Docket No. CP71–163, as amended.

Natural further states that pursuant to a gas purchase agreement between Natural and Mobil dated April 1, 1971 (1971 Agreement), Natural received certain volumes of natural gas from Mobil in Hemphill County, Texas and delivered equivalent quantities of natural gas to Mobil in Liberty County, Texas. Such exchange was performed under Natural's Rate Schedule X–55 authorized in Docket No. CP71–316.

Natural states that by a letter agreement between Natural and Mobil dated November 10, 1994, Natural and Mobil agreed to terminate both the 1970 Agreement, as amended, and the 1971 Agreement.

Comment date: January 19, 1995, in accordance with Standard Paragraph F at the end of this notice.

3. Tennessee Gas Pipeline Company

[Docket No. CP95–128–000]

Take notice that on December 22, 1994, Tennessee Gas Pipeline Company (Tennessee), P. O. Box 2511, Houston, Texas 77252, filed in Docket No. CP95–128–000 a request pursuant to Sections 157.205 and 157.212 of the Commission's Regulations under the Natural Gas Act (18 CFR 157.205 and 157.212) for authorization to construct and operate a delivery point in Sabine Parish, Louisiana, in order to deliver gas to Trans Louisiana Gas Company (Trans La). Tennessee makes such request under its blanket certificate issued in Docket No. CP82–413–000 pursuant to Section 7 of the Natural Gas Act, all as set forth in the request which is on file with the Commission and open to public inspection.

Tennessee proposes to install, own, operate and maintain two 2″ hot tap assemblies, 2″ interconnect pipe, and 2″ meter facilities in Sabine Parish, Louisiana. Tennessee states that the hot tap and interconnect pipe will be located on existing right-of-way; the meter will be located on a side provided by Trans La adjacent to the right-of-way. Tennessee states that the estimated cost associated with this new delivery point is $46,079. Tennessee states that this cost is 100% reimbursable by Trans La.

Tennessee states that the total quantities to be delivered for Trans La will not exceed the total quantities authorized. Tennessee asserts that the

establishment of the proposed delivery point is not prohibited by Tennessee's tariff, and that it has sufficient capacity to accomplish the deliveries at the proposed new delivery point without detriment or disadvantage to any of Tennessee's other customers.

Comment date: February 13, 1995, in accordance with Standard Paragraph G at the end of this notice.

4. Northern Natural Gas Company

[Docket No. CP95–130–000]

Take notice that on December 22, 1994, Northern Natural Gas Company (Northern), P.O Box 3330, Omaha, NE 68103–0330, filed an application in Docket No. CP95–130–000 pursuant to Section 7(c) of the Natural Gas Act for a certificate of public convenience and necessity authorizing it to construct and operate compression and other facilities necessary to expand the capacity of its East Leg in order to render provide new or additional firm transportation services to five shippers, all as more fully set forth in the application on file with the Commission and open to public inspection.

Northern proposes to increase the capacity of its East Leg by approximately 107,600 MMBtu per day (MMBtu/d) by constructing, operating, and modifying certain compression and town border station (TBS) facilities in the states of Iowa, Illinois, and Wisconsin. Northern proposes to construct the facilities in two phases, the first phase to be completed in November and December 1995, and the second phase to be completed by June 1, 1996. It is indicated that the 1995 construction includes (1) a new compressor station of approximately 6,000 horsepower (hp) in Hardin County, Iowa (Hubbard Compressor Station), (2) modification and repiping of the existing Waterloo Compressor Station, (3) a new compressor station of approximately 14,000 hp in Delaware County, Iowa (Earlville Compressor Station), (4) a new TBS in Dubuque County, Iowa, (5) modification of the existing Galena Compressor Station, (6) modification of the existing Beloit TBS near Beloit, Wisconsin, and (7) a new TBS in Walworth County, Wisconsin. The 1996 construction program would involve construction of a new 3,200 hp compressor station in Green County, Wisconsin (Belleville Compressor Station).

The 1995 construction program would increase East Leg capacity by 72,200 MMBtu/d and permit deliveries to 4 customers as shown below.

Cedar Falls Utilities—200 MMBtu/d
Wisconsin Power and Light Company—20,000 MMBtu/d
Iowa-Illinois Gas & Electric Company—50,000 MMBtu/d
IES Industries, Inc.—2,000 MMBtu/d

The 1996 construction program would provide incremental capacity of 30,400 MMBtu/d and would serve the requirements of 2 customers as shown below.

LSP Whitewater Limited Partnership—25,400 MMBtu/d
Iowa Illinois Gas & Electric Company—5,000 MMBtu/d

Northern states that the total estimated cost of the project is $27,600,000, including $21,710,000 for 1995 construction and $5,890,000 for 1996 construction. Compression facilities account for $26,880,000 of the capital costs with the remaining $720,000 attributable to TBS facilities. Northern proposes to finance the project with internally generated funds.

Northern states that the market requirements to be served by the project are the result of an open season which Northern conducted from March 19, 1993 to April 19, 1993. The open season was posted on Northern's electronic bulletin (EEB) on March 8, 1993 and was publicized through various other means.

Northern states that it has executed precedent agreements covering the incremental firm service to be provided through the proposed facilities. Northern does not propose incremental rates for the project. Northern states that the incremental revenues from the proposed project will exceed the incremental cost of service for at least ten years and will therefore produce a positive impact on rates.

Comment date: January 19, 1995, in accordance with Standard Paragraph F at the end of this notice.

Standard Paragraphs:

F. Any person desiring to be heard or to make any protest with reference to said application should on or before the comment date, file with the Federal Energy Regulatory Commission, Washington, D.C. 20426, a motion to intervene or a protest in accordance with the requirements of the Commission's Rules of Practice and Procedure (18 CFR 385.214 or 385.211) and the Regulations under the Natural Gas Act (18 CFR 157.10). All protests filed with the Commission will be considered by it in determining the appropriate action to be taken but will not serve to make the protestants parties to the proceeding. Any person wishing to become a party to a proceeding or to participate as a party in any hearing therein must file a motion to intervene in accordance with the Commission's Rules.

Take further notice that, pursuant to the authority contained in and subject to the jurisdiction conferred upon the Federal Energy Regulatory Commission by Sections 7 and 15 of the Natural Gas Act and the Commission's Rules of Practice and Procedure, a hearing will be held without further notice before the Commission or its designee on this application if no motion to intervene is filed within the time required herein, if the Commission on its own review of the matter finds that a grant of the certificate and/or permission and approval for the proposed abandonment are required by the public convenience and necessity. If a motion for leave to intervene is timely filed, or if the Commission on its own motion believes that a formal hearing is required, further notice of such hearing will be duly given.

Under the procedure herein provided for, unless otherwise advised, it will be unnecessary for applicant to appear or be represented at the hearing.

G. Any person or the Commission's staff may, within 45 days after issuance of the instant notice by the Commission, file pursuant to Rule 214 of the Commission's Procedural Rules (18 CFR 385.214) a motion to intervene or notice of intervention and pursuant to Section 157.205 of the Regulations under the Natural Gas Act (18 CFR 157.205) a protest to the request. If no protest is filed within the time allowed therefor, the proposed activity shall be deemed to be authorized effective the day after the time allowed for filing a protest. If a protest is filed and not withdrawn within 30 days after the time allowed for filing a protest, the instant request shall be treated as an application for authorization pursuant to Section 7 of the Natural Gas Act.

Lois D. Cashell,

Secretary.

[FR Doc. 95–273 Filed 1–5–95; 8:45 am]

BILLING CODE 6717–01–P

ENVIRONMENTAL PROTECTION AGENCY

[ER-FRL–4718–8]

Environmental Impact Statements; Notice of Availability

Responsible Agency: Office of Federal Activities, General Information (202) 260–5076 OR (202) 260–5075. Weekly receipt of Environmental Impact Statements Filed December 26, 1994 Through December 30, 1994 Pursuant to 40 CFR 1506.9.

EIS No. 940525, Draft EIS, DOD, HI, Kauai Acoustic Thermometry of

Ocean Climate (ATOC) Project and Marine Mammal Research Program (MMRP), Funding, Marine Manual Research Permit and COE Section 10 Permit Issuance, Kauai, HI, Due: February 20, 1995, Contact: Marilyn Cox (619) 534–3860.

The U.S. Department of Defense's, Advanced Research Projects Agency and the U.S. Department of Commerce's, National Marine Fisheries Service are Joint Lead Agencies for the above project.

EIS No. 940526, Final EIS, NPS, ID, City of Rocks National Reserve, Comprehensive Management Plan and Development Concept Plan, Implementation, Cassia County, ID, Due: February 6, 1995, Contact: Charles H. Odegaard (206) 220–4010.

EIS No. 940527, Draft Supplement, FHW, VT, I–89 Interchange in the Town of Bolton and US 2 between Watersburg and Richmond Construction Project, Updated Information, Chittenden and Washington Counties, VT, Due: March 15, 1995, Contact: Donald J. West (802) 828–4423.

EIS No. 940528, Draft EIS, FHW, WI, WI–100 and US 45 Interchange Roadway Improvements and Construction, Funding and COE Section 404 Permit, Milwaukee and Waukesha Counties, WI, Due: February 20, 1995, Contact: Richard C. Schimelfenyg (608) 264–5437.

EIS No. 940529, Draft EIS, FHW, PA, Kittanning By-Pass/PA–6028, Section 015 Extension of the Allegheny Valley Expressway, existing Allegheny Valley Expressway to the Traffic Route 28/66 and Traffic Route 85 Intersection, Funding and COE Section 404 and EPA NPDES Permits Issuance, Armstrong County, PA, Due: March 15, 1995, Contact: Manuel A. Marks (717) 782–2222.

EIS No. 940530, Draft EIS, BLM, WY, Grass Creek Resource Management Plan, Implementation, Big Horn, Washakie, Hot Springs and Park Counties, WY, Due: April 5, 1995, Contact: Bob Ross (307) 34798711.

EIS No. 940531, Draft EIS, FHW, AL, Eastern Pleasure Island Hurricane Evacuation Route Construction, AL–182 in Orange Beach to CR–95 near CR–20 (on the mainland) and CR–95 near CR–20 to I–10, Funding and U.S. Coast Guard Bridge and COE Section 404 Permits Issuance, Baldwin County, AL, Due: February 27, 1995, Contact: Joe D. Wilkerson (250) 223–7370.

Dated: December 30, 1994.

William D. Dickerson,

Director, Federal Agency Liaison Division, Office of Federal Activities.

[FR Doc. 95–235 Filed 1–5–95; 8:45 am]

BILLING CODE 6560–50–U

FEDERAL COMMUNICATIONS COMMISSION

Network Reliability Council Meeting

AGENCY: Federal Communications Commission.

ACTION: Notice of public meeting.

SUMMARY: In accordance with the Federal Advisory Committee Act, Public Law 92–463, as amended, this notice advises interested persons of the tenth meeting of the Network Reliability Council (''Council''), which will be held at the Federal Communications Commission in Washington, D.C.

DATES: Thursday, January 19, 1995 at 1:30 p.m.

ADDRESS: Federal Communications Commission, Room 865, 1919 M Street, N.W., Washington, D.C. 20554.

FOR FURTHER INFORMATION CONTACT: Robert Kimball at (202) 634–7150.

SUPPLEMENTARY INFORMATION: The Council was established by the Federal Communications Commission to bring together leaders of the telecommunications industry and telecommunications experts from academic, consumer and other organizations to explore and recommend measures that would enhance network reliability.

The agenda for the tenth meeting is as follows. The Council will hear reports from the four subject matter task groups on their groups' membership and progress to date. The Council also will receive an update on the present state of telecommunications network reliability and will discuss other issues of business. After determining future meeting dates, the Council will adjourn.

Members of the general public may attend the meeting. The Federal Communications Commission will attempt to accommodate as many people as possible. However, admittance will be limited to the seating available. The public may submit written comments to the Council's designated Federal Officer, before the meeting.

William F. Caton,

Acting Secretary.

[FR Doc. 95–409 Filed 1–6–95; 12:44 pm]

BILLING CODE 6712–01–M

FEDERAL MARITIME COMMISSION

Security for the Protection of the Public Indemnification of Passengers for Nonperformance of Transportation; Notice of Issuance of Certificate (Performance)

Notice is hereby given that the following have been issued a Certificate of Financial Responsibility for Indemnification of Passengers for Nonperformance of Transportation pursuant to the provisions of Section 3, Public Law 89–777 (46 U.S.C. 817(e)) and the Federal Maritime Commission's implementing regulations at 46 CFR part 540, as amended: Crystal Cruises, Inc. and Crystal Ship (Bahamas) Limited, 2121 Avenue of the Stars, Los Angeles, California 90067.

Vessel: Crystal Symphony

Dated: January 3, 1995.

Joseph C. Polking,

Secretary.

[FR Doc. 95–360 Filed 1–5–95; 8:45 am]

BILLING CODE 6730–01–M

DEPARTMENT OF HEALTH AND HUMAN SERVICES

Administration for Children and Families; Office of Community Services

[Program Announcement No. OCS–95–03]

Request for Applications Under the Office of Community Services' Fiscal Year 1995 Discretionary Grants Program

AGENCY: Office of Community Services, Administration for Children and Families, Department of Health and Human Services.

ACTION: Request for applications under the Office of Community Services' Discretionary Grants Program.

SUMMARY: The Administration for Children and Families, Office of Community Services (OCS) announces that competing applications will be accepted for new grants pursuant to the Secretary's discretionary authority under sections 681 (a) and (b) of the Community Services Block Grant Act of 1981, as amended. This Program Announcement consists of seven parts:

Part A covers information on legislative authorities and defines terms used in the Program Announcement;

Part B lists the three program priority areas under which grants will be made, describes the types of projects that will be considered for funding under each priority area, and defines which organizations are eligible to apply;

Part C provides details on application prerequisites, funds available in each priority area, limitations on grant amounts, project periods, who should benefit from the programs, and other application requirements;

Part D describes the application procedures, including the availability of forms, where and how to submit an application, the criteria used in screening and evaluating applications, and compliance with Federal requirements regarding the drug-free workplace and debarment requirements in submitting the application;

Part E describes the contents of the application package and receipt process;

Part F provides instructions for completing the SF–424 following standard Federal guidelines as well as OCS specific requirements, and describes how the project narrative should be ordered and presented; and

Part G details post-award information and reporting requirements.

CLOSING DATES: The closing date for submission of applications is February 21, 1995 for all Priority Areas with exception of Priority Area 1.5. For Priority Area 1.5, the closing date for submission of applications is February 6, 1995.

FOR FURTHER INFORMATION CONTACT: Office of Community Services, Joseph D. Reid, Director, Division of Community Discretionary Programs, Administration for Children and Families, 370 L'Enfant Promenade S.W., Washington, D.C. 20447, Telephone (202) 401–9345.

This Announcement is accessible on the OCS Electronic Bulletin Board for downloading through your computer modem by dialing 1–800–627–8886. For assistance in accessing the Bulletin Board, a Guide to accessing and downloading is available from Ms. Minnie Landry at (202) 401–5309.

Table of Contents

Part A—Preamble

1. Legislative Authority
2. Departmental Goals
3. Definition of Terms

Part B—Program Priority Areas

Part C—Application Prerequisites

1. Eligible Applicants
2. Availability of Funds
3. Project and Budget Periods
4. Mobilization of Resources
5. Program Beneficiaries
6. Number of Projects in Application
7. Multiple Submittals
8. Sub-contracting or Delegating Projects
9. Previous Performance and Current Grants

Part D—Application Procedures

1. Availability of Forms
2. Application Submission
3. Intergovernmental Review
4. Application Consideration
5. Criteria for Screening Applicants
6, 7 & 8. Criteria for Review and Evaluation of all Applications

Part E—Contents of Application and Receipt Process

1. Contents of Application
2. Acknowledgement of Receipt

Part F—Instructions for Completing Application Package

1. SF–424 ''Application for Federal Assistance''
2. SF–424A ''Budget Information—Non-Construction Programs''
3. SF–424B ''Assurances—Non-Construction''
4. Restrictions on Lobbying Activities
5. Disclosure of Lobbying Activities
6. Project Narrative

Part G—Post Award Information and Reporting Requirements

Part A—Preamble

1. Legislative Authority

Section 681(a) and 681(b)(2) of the Community Services Block Grant Act, as amended, authorizes the Secretary to make funds available to support program activities of national or regional significance to alleviate the causes of poverty in distressed communities with special emphasis on community and economic development activities and assistance to migrants and seasonal farmworkers. Section 681(b) authorizes the Secretary to make grants for assistance to rural low-income families in home repair and planning and developing low-income rural rental housing units and training and technical assistance to meet community facility needs.

2. Departmental Goals

This announcement is particularly relevant to the Departmental goal of strengthening the American family and promoting self-sufficiency. These programs have objectives of increasing the access of low-income people to employment-related opportunities, improving job skills, and improving the integration, coordination, and continuity of the various HHS (and other Federal Departments') funded services potentially available to families living in poverty.

3. Definition of Terms

For purposes of this Program Announcement the following definitions apply:

—Community development corporation: A private, nonprofit entity, governed by a board consisting of residents of the community and business and civic leaders, which has as a principal purpose planning, developing, or managing low-income housing or community development projects.

—Displaced worker: An individual who is in the labor market but has been unemployed for six months or longer.

—Distressed community: A geographic urban neighborhood or rural community of high unemployment and pervasive poverty.

—Eligible applicant: (See appropriate Priority Area under Part B.)

—Empowerment Zones: Rebuilding communities in America's poverty-stricken inner cities and rural heartland. Empowering communities across the nation in developing and implementing strategic plans to create jobs and business opportunities and sustainable community development.

—Enterprise Communities: Empowering American communities and their residents to create jobs and business opportunities, take effective action to solve difficult and pressing economic, human, community and physical development challenges of today, and to build for tomorrow as part of a Federal-State-local and private-sector partnership.

—Indian tribe: A tribe, band, or other organized group of Indians recognized in the State in which it resides or which is considered by the Secretary of the Interior to be an Indian tribe or an Indian organization for any purpose. For the purpose of Priority Area 1.0 (Urban and Rural Community Economic Development) an Indian tribe or Indian organization is ineligible unless the applicant organization is a private non-profit community economic development corporation.

—Job Creation: Jobs that were not in existence prior to grant. (NOTE: Do not confuse this with Job Placement which is placing a person in a vacant job.)

—Migrant farmworker: An individual who works in agricultural employment of a seasonal or other temporary nature who is required to be absent from his/her place of permanent residence in order to secure such employment.

—Rural: An area that is not within the outer boundary of a metropolitan entity having a population of 25,000 or more and contiguous communities with a population density of 100 persons or more per square mile according to the latest decennial census. Such an area may be located entirely within one State or made up of contiguous interstate communities.

—Seasonal farmworker: Any individual employed in agricultural work of a seasonal or other temporary nature who is able to remain at his/her place

of permanent residence while employed.

—Budget period: The interval of time into which a grant period of assistance is divided for budgetary and funding purposes.

—Project period: The total time for which a project is approved for support, including any approved extensions.

—Employment Education and Training Program: A program that provides education and/or training to welfare recipients, at-risk youth, public housing tenants, displaced workers, homeless and low-income individuals and that has demonstrated organizational experience in education and training for these populations (JOBS, JTPA, etc).

—Technical Assistance: A problem-solving event generally utilizing the services of an expert. Such services may be provided on-site, by telephone, or other communications. These services address specific problems and are intended to assist with the immediate resolution of a given problem or set of problems.

Part B—Program Priority Areas

The program priority areas of the Office of Community Services' Discretionary Grants Program are as follows:

Priority Area 1.0 Urban and Rural Community Economic Development.

1.1 Urban and Rural Community Economic Development (Operational).

1.2 Urban and Rural Community Economic Development (HBCU Set-Aside).

1.3 Urban and Rural Community Economic Development (Pre-Developmental Set-Aside).

1.4 Administrative and Management Expertise.

1.5 Training and Technical Assistance (Set-Aside).

Priority Area 2.0 Rural Community Development Activities.

2.1 Rural Housing (including rental housing for low-income individuals).

2.2 Rural Community Facilities Development (Water and Waste Water Treatment Systems Development).

Priority Area 3.0 Assistance for Migrants and Seasonal Farmworkers.

3.1 Assistance for Migrants and Seasonal Farmworkers (General).

3.2 Assistance for Migrants and Seasonal Farmworkers (HBCU Set-Aside).

Priority Area 1.0 Urban and Rural Community Economic Development

Eligible applicants are private, non-profit community development corporations governed by a board consisting of residents of the community and business and civic leaders which has as a principal purpose planning, developing, or managing low-income housing or community development projects.

The purpose of this priority area is to encourage the creation of projects intended to provide employment and business development opportunities for low-income people through business, physical or commercial development, and generally to improve the quality of the economic and social environment of low-income residents, including displaced workers, at-risk teenagers, individuals residing in public housing, and individuals who are homeless, especially those with developmental disabilities. It is intended to provide resources to eligible applicants but also has the broader objectives of arresting tendencies toward dependency, chronic unemployment, and community deterioration in urban and rural areas. Sub-Priority Area 1.4 is intended to provide administrative and management expertise to current Office of Community Services' grantees who are experiencing problems in the implementation of urban and rural community economic development projects. Sub-Priority Area 1.5 is intended to provide training and technical assistance to groups of community development corporations in developing or implementing projects funded under this section and to generally enhance the viability and competence of community development corporations.

To this end, the program also seeks to attract additional private capital into distressed communities, including empowerment zones and enterprise communities, and to build and/or expand the ability of local institutions to better serve the economic needs of local residents.

Sub-priority area 1.1 Urban and rural community economic development (operational). Funds will be provided to a limited number of private non-profit community development corporations for business development activities at the local level. Funding will be provided for specific projects and will require the submission of business plans or developmental proposals that meet the test of economic feasibility.

Projects must further the Departmental goals of strengthening American families and promoting their self-sufficiency. OCS is particularly interested in receiving applications that stress public-private partnerships that are directed toward the development of economic self-sufficiency through a focus on economic expansion.

Applicants located in empowerment zones and enterprise communities are urged to submit applications. Such applicants may request funds for a business development project or a project that demonstrates innovative ways to create jobs in the poverty community.

Applications must show that the proposed project:

(1) Creates full-time permanent jobs. Seventy-five percent (75%) of those jobs created must be filled by low-income residents of the community and must also provide for career development opportunities. Project emphasis should be on employment of individuals who are unemployed or on public assistance, with particular emphasis on at-risk teenagers, AFDC recipients who are participating in the JOBS program, individuals residing in public housing, and individuals who are homeless. While projected employment in future years may be included in the application, it is essential that the focus of employment projects concentrate on those jobs created during the duration of the OCS project period; and/or

(2) Creates a significant number of business development opportunities for low-income residents of the community or significantly aids such residents in maintaining economically viable businesses; and

(3) Provides for establishing the self-sufficiency of program participants.

In the evaluation process, favorable consideration will be given to applicants under this priority area who show the lowest cost-per-job created. Unless there are extenuating circumstances, OCS will not fund projects where the cost-per-job in OCS funds exceeds $15,000.

In addition, favorable consideration in the evaluation process will be given to applicants who demonstrate their intention to coordinate services with the local JOBS office and/or other employment education and training offices that serve the proposed area. The JOBS or other employment education and training offices should serve welfare recipients, at-risk youth, public housing tenants, displaced workers, homeless and low-income individuals (as defined by DHHS poverty guidelines). Applicants should submit a written agreement from the JOBS or other local employment education and training office that indicates what actions will be taken to integrate/coordinate services

that relate directly to the project for which funds are being requested. The agreement should include the goals and objectives (including target groups) that the applicant and the employment education and training office expect to reach through their collaboration. It should describe the cooperative relationship, including specific activities and/or actions each of these entities proposes to carry out in support of the project, and the mechanism(s) to be used in coordinating those activities if the project is funded by OCS. Documentation that illustrates the organizational experience of the employment education and training office should also be included.

Any applicant which proposes to use the requested OCS funds to make an equity investment such as the purchase of stock, or a loan to a business concern, including a wholly-owned subsidiary, or to make a sub-grant with a portion of the OCS funds, must include in its application a written agreement with the third party that commits the latter to the following:

1. A minimum of 75% of the jobs to be created under the grant will be for low-income individuals.
2. The grantee will have authority to screen applicants for jobs to be filled by low-income individuals and to verify their eligibility.
3. The grantee will have a seat on the Board of Directors of the third party's firm if the grantee's investment equals 25% or more of the firm's assets. (Not applicable to loans made to third parties.)
4. Reports will be made on a quarterly basis to the grantee on the use of grant funds.
5. A procedure will be developed to assure that there are no duplicative counts of jobs created.
6. Detailed information will be provided on how the grant funds will be used by the third party by submitting a Source and Use of Funds Statement. In addition, the agreement will provide details on how the community development corporation will provide support and technical assistance to the third-party in areas of recruitment and retention of low-income individuals.

Any funds that are proposed to be used for training purposes must be limited to providing specific job-related training to those poverty level individuals who have been selected for employment in the grant supported project.

OCS encourages applications that create linkages with community organizations administering the JOBS program which will train and place residents dependent on public assistance into jobs created by the project funded under this priority area.

Projects which would result in the relocation of a business from one geographic area to another with the possible displacement of employees are discouraged.

OCS will not consider applications that propose to establish or expand revolving loan funds, nor proposals that are geared towards the establishment of Small Business Investment Corporations or Minority Enterprise Small Business Investment Corporations.

OCS does not anticipate approving the funding of applications which propose to sub-grant all or most of the grant activities to an unrelated entity.

Applicants must be aware that projects funded under this priority area must be operational by the end of the project period, i.e., businesses must be in place, and low-income individuals actually employed in those businesses.

See Part F, 7, d, for special instructions on developing a work program for this priority area.

Sub-priority area 1.2 Urban and rural community economic development (HBCU set-aside). For Fiscal Year 1995, a set-aside fund of $2,250,000 will be included under this priority area for eligible applicants that submit projects that will be carried out in conjunction with Historically Black Colleges and Universities through contract or sub-grant. Such projects must conform to the purposes, requirements and prohibitions applicable to those submitted under Sub-Priority Area 1.1.

Any funds that are proposed to be used for training must be directly related to the project and all individuals trained must be placed in a newly created job or business.

These projects should reflect a significant partnership role for the college or university, and the applicant in doing so will be considered to have fulfilled the goals of the Public-Private Partnerships evaluation criterion and will be granted the maximum number of points in that category. Applications for these set-aside funds which are not funded due to the limited amount of funds available will also be considered competitively within the larger pool of eligible applicants under Sub-Priority Area 1.1.

See Part F, 7, d, for special instructions on developing a work program for this priority area.

Sub-priority area 1.3 Urban and rural community economic development (pre-developmental set-aside). OCS intends in this priority area to provide funds to recently-establishment private, non-profit community development corporations which propose to undertake economic development activities in distressed communities.

OCS recognizes that there are a number of newly-organized non-profit community development corporations who have identified needs in their communities but who have not had the staff or other resources to develop projects to address those needs. This lack of resources also might be affecting their ability to compete for funds, such as those provided under OCS's Urban and Rural Community Development Program (Operational Grants) since their limited resources would preclude them from developing a comprehensive business plan and/or mobilizing resources. OCS has an interest in providing support to these new entities in order to enable them to become more firmly established in their communities, thereby bringing technical expertise and new resources to these previously unserved or underserved communities. Therefore, OCS is setting aside $750,000 in Fiscal Year 1995 for grants to private non-profit community development corporations which have been in existence for no more than three years and have never received OCS funding. From this sum, grants of up to $75,000 each will be made to eligible applicants. These grants will be made for a period of one year and will not require matching funds.

The grants will be pre-developmental grants under which CDCs may incur costs to: (1) evaluate the feasibility of potential projects which address identified needs in the low-income community and which conform to those projects and activities allowable under Sub-Priority Areas 1.1 and 1.2; (2) develop a Business Plan related to one of those projects; and (3) mobilize resources to be contributed to projects, including the utilization of Historically Black Colleges and Universities. Based on the availability of funds in Fiscal Year 1996, OCS will consider establishing a set-aside to provide operational funds to those organizations which received pre-developmental grants. Grants might be for a maximum of $250,000 and competition for those funds will be restricted to those organizations receiving Fiscal Year 1995 pre-developmental grants. The Business Plan developed as a result of the pre-developmental grant would be submitted as part of the competitive application.

Each application for Fiscal Year 1995 funded under this Priority Area must include the following as part of the project narrative.

1. Description of the impact area, i.e., a description of the low-income area it proposes to address;

2. Analysis of need in the distressed community;

3. Project objectives and measurable impact, i.e., a discussion of the types of projects that might be implemented to address the identified needs and how the proposed projects relate to the applicant's organizational goals and previous experience (if any); and

4. Implementation factors and quarterly work plans with specific task timelines.

Sub-priority area 1.4 Administrative and management expertise. OCS believes that one of the most effective means of assuring the successful operation of a project under the Discretionary Grants Program area is through the sharing amongst CDCs of their experiences in dealing with the day to day issues and challenges presented in promoting community economic development. Accordingly, OCS strongly encourages more experienced CDCs to share their administrative and management expertise with less experienced CDCs or with those who have encountered difficulties in operationalizing their work programs. In order to facilitate this, OCS will provide funds to one or more community development corporations (as defined in Part A.3) to enhance the management and operational capacities of the less experienced CDCs or those having difficulties.

The grant(s) would be for a maximum of $500,000 with a project period not to exceed 17 months. Formal referrals to the grantee or grantees funded under this sub-priority area could be initiated by OCS with the concurrence of a grantee seeking to benefit from such contact. Such formal requests could also be initiated by a grantee with the concurrence of OCS. These contacts may occur on-site, by telephone, or by other methods of communication. Costs incurred in connection with participating in such activities will be borne by the recipient(s) of the OCS grant under this sub-priority area.

Sub-priority area 1.5 Training and technical assistance. Funds will be awarded to one organization under this priority area for the purpose of providing training and technical assistance to strengthen the network of CDCs and to evaluate projects funded under this section.

The grant will be for a maximum of $235,000 with a grant period not to exceed 17 months. Applicant must have the ability to collect and analyze data nationally that may benefit CDCs and be able to disseminate information to all of OCS funded grantees. The applicant will also be responsible for the development of instructional programs, conferences, seminars and other activities to assist community development corporations.

Eligible applicants are private non-profit organizations. Applicants must operate on a national basis and have significant and relevant experiences in working with community development corporations.

Priority Area 2.0 Rural Community Development Activities

Sub-priority area 2.1 Rural housing (including rental housing for low-income individuals). Eligible applicants are States, public agencies or private nonprofit organizations, including Historically Black Colleges and Universities.

The purpose of this priority area is to assist low-income residents in rural communities by providing grants to eligible applicants to: (a) Provide technical assistance to help low-income families and individuals more effectively utilize existing local, State and Federal housing assistance programs; and (b) develop innovative ways to meet the housing needs of low-income people, e.g., the rehabilitation or repair of existing substandard housing units for occupancy by low-income residents, the conversion of nonresidential buildings to low-income residential use, and the purchase of homes by low-income people.

OCS encourages applications that will assist low-income homeowners to improve their housing through self-help rehabilitation. These applications should not include projects which can be funded through other existing Federal programs.

OCS also encourages the submission of proposals with the aim of assisting homeless families and those at risk of homelessness. Innovative ways to address housing needs of homeless families are of particular interest to OCS.

Projects should produce the following types of tangible improvements and benefits related to housing conditions for rural poor people: interior or exterior structural repairs including weatherization, asbestos and lead abatement, and alternative energy systems; jobs created for local unskilled residents while assuring quality work; technical assistance and professional services related to housing and community planning by community-based design and planning organizations. (Such projects should be conducted with maximum use of voluntary services of professional and community personnel, and development of innovative housing strategies to help low-income rural residents acquire housing.)

Applications calling for new construction or ''gut'' rehabilitation will only be considered if the application documents that there is insufficient existing housing stock that can be economically rehabilitated.

Funds will not be available for the repair or rehabilitation of low-income rental housing unless the structure is either occupied by a low-income owner or the properties to be repaired are (a) owned by a private non-profit organization and (b) covered by a written agreement which will ensure continued occupancy by low-income people for at least three years after completion of repairs and rehabilitation.

OCS is particularly interested in receiving applications from such entities as rural housing development corporations, cooperatives, and other public and private organizations with proven accomplishments in the area of rural housing.

See Part F, 7, d, for special instructions on developing a work program for this priority area.

Sub-priority area 2.2 Rural community facilities development (water and waste water treatment systems development). Funds will be provided under this priority area to help low-income rural communities develop the capability and expertise to establish and/or maintain affordable, adequate and safe water and waste water treatment facilities.

Funds provided under this priority area may not be used for construction of water and waste water treatment systems or for operating subsidies for such systems, but other mobilized funds may be used for these activities. Therefore, it is suggested that applicants coordinate projects with the Farmers Home Administration (FmHA) and other Federal and State agencies to ensure that funds for hardware for local community projects are available.

Eligible applicants are public or private nonprofit organizations, including Historically Black Colleges and Universities, that provide training and technical assistance to small, rural communities in meeting their community facility needs.

See Part F, 7, d, for special instructions on developing a work program for this priority area.

Priority 3.0 Assistance for Migrants and Seasonal Farmworkers

Sub-priority 3.1 Assistance for migrants and seasonal farmworkers

(general). Eligible applicants are States, public agencies and private nonprofit organizations, including Historically Black Colleges and Universities.

The purpose of this priority area is to fund a limited number of projects which focus exclusively on the problems and special needs of migrants and seasonal farmworkers in order to improve their quality of life and advance self-sufficiency.

OCS will entertain proposals that directly meet farmworker needs in such areas as: homelessness; crisis nutritional relief; the development of self-help systems of food production; emergency health and social services referral and assistance; home repair, rehabilitation, and ownership; direct assistance to low-income farmworkers, including at-risk teenagers, to improve their job skills for them to qualify for long term and permanent full-time employment in agriculture; and/or assistance to low-income farmworkers, including at-risk teenagers, who wish to leave agricultural employment and find jobs in other lines of work. Linkages with the local JOBS program are encouraged wherever appropriate.

Applicants must provide quantifiable objectives for each of the above activities which will be included in the project. OCS encourages applicants to develop linkages with other public and private sector service providers who also are working with migrant and seasonal farmworkers or with issues affecting this target group.

For projects that relate to job skills and training, OCS will not consider applications proposing to use funds exclusively for classroom instruction. Placement in permanent jobs must be an integral activity of any training project.

Applications submitted under this priority area must not contain requests for OCS funding for projects that would duplicate Community Services Block Grant funding or activities for which funding is available from other Federal agencies such as the Department of Labor and the Department of Agriculture's Women, Infants and Children (WIC) program.

See Part F, 7, d, for special instructions on developing a work program for this priority area.

Sub-priority area 3.2 assistance for migrants and seasonal farmworkers (HBCU set-aside). For Fiscal Year 1995, a fund of $300,000 will be set aside for Historically Black Colleges and Universities to enable them to offer continuing education to migrants and seasonal farmworkers and to increase participant employment opportunities. Applicants must provide quantifiable objectives for each of the activities which will be included in the project. Applications which are not funded within this set-aside due to the limited amount of funds available will also be considered competitively within the larger pool of eligible applicants under Sub-Priority Area 3.1.

See Part F, 7, b, for special instructions on developing a work program for this priority area.

Part C—Application Prerequisites

1. Eligible Applicants

Priority areas included in this Program Announcement have differing eligibility requirements. Therefore, eligible applicants are identified in the individual priority area descriptions found in Part B, above.

2. Availability of Funds

a. FY 1995 Funds

The Office of Community Services expects to award funds by April 30, 1995 for new grants. The maximum amount of funds available for each Priority Area is summarized below:

Priority area	Fiscal year 1995 funds
1.0 Urban and Rural Community Economic Development:	
1.1 Urban and Rural Community Economic Development (Operational)	$19,498,000
1.2 Urban and Rural Community Economic Development (HBCU Set-Aside)	2,250,000
1.3 Urban and Rural Community Economic Development (Pre-Developmental Set-Aside)	750,000
1.4 Grantee Assistance (Set Aside)	500,000
1.5 Training & Technical Assistance (Set Aside)	235,000
2.0 Rural Community Development Activities	6,198,000
3.0 Assistance for Migrants and Seasonal Farmworkers:	
3.1 Assistance for Migrants and Seasonal Farmworkers (General)	2,784,000
3.2 Assistance for Migrants and Seasonal Farmworkers (HBCU Set-Aside)	300,000

b. Grant Amounts

No more than the below stated amounts will be granted for projects under the Priority Areas as indicated:

Sub-priority area	Funding limit
1.1	$700,000
1.2	750,000
1.3	75,000
1.4	500,000
1.5	235,000
2.1	250,000
2.2	425,000
3.1	250,000
3.2	75,000

3. Project and Budget Periods

For Sub-Priority Areas 1.1, and 1.2, applicants with projects involving construction only, may request project and budget periods of up to 36 months. Applicants for other economic development projects under those priority areas and Sub-Priority Areas 1.4, 1.5, 2.1, 3.1 and 3.2 may request project and budget periods of up to 17 months. For Sub-Priority Area 2.2, grantees will be funded for a 12 month project period. For Sub-Priority Area 1.3, applicants may request project and budget periods of up to 12 months. By fully funding the projects in FY 95 funding stability in future years will be insured.

4. Mobilization of Resources

OCS encourages and strongly supports mobilization of resources through public/private partnerships which can mobilize cash and/or third-party in-kind contributions.

5. Program Beneficiaries

Projects proposed for funding under this Announcement must result in direct benefits to low-income people as defined in the most recent Annual Revision of Poverty Income Guidelines published by DHHS.

Attachment A to this Announcement is an excerpt from the Poverty Income Guidelines currently in effect. Annual revisions of these guidelines are normally published in the **Federal Register** in February or early March of each year. Grantees will be required to apply the most recent guidelines throughout the project period. These revised guidelines may be obtained by accessing the OCS Electronic Bulletin Board (see ''For Further Information Contact'' at the beginning of this Announcement), at public libraries, Congressional offices, or by writing the Superintendent of Documents, U.S. Government Printing Office, Washington, D.C. 20402.

No other government agency or privately-defined poverty guidelines are applicable for the determination of low-income eligibility for these OCS programs.

Note, however, that low-income individuals granted lawful temporary

resident status under Sections 245A or 210A of the Immigration and Nationality Act, as amended by the Immigration Reform and Control Act of 1986 (Public law 99–603) may not be eligible for direct or indirect assistance based on financial need under this program for a period of five years from the date such status was granted.

6. Number of Projects in Application

An application may contain only one project (except for Priority Areas 1.3, 1.4, 1.5, and 3.1 where applicants are researching various opportunities, are providing training and/or technical assistance to current OCS grantees, are responsible for seminars and other activities in assisting Community Development Corporations, or are having a multi-faceted approach to Migrants' issues) and this project must be identified as responding to one of the program priority areas stated in this Announcement. Applications which are not in compliance with this requirement will be ineligible for funding.

7. Multiple Submittals

There is no limit to the number of applications that can be submitted under a specific program priority area as long as each application contains a proposal for a different project. However, an applicant will receive only one grant in any Priority Area.

8. Sub-Contracting or Delegating Projects

OCS does not fund projects where the role of the applicant is *primarily* to serve as a conduit for funds to organizations other than the applicant. The applicant must have a substantive role in the implementation of the project for which funding is requested.

9. Previous Performance and Current Grants

Previous performance of applicants will be a determining factor in the grant award decisions. Any applicant which has three or more active OCS grants may only be funded under exceptional circumstances.

Part D—Application Procedures

1. Availability of Forms

Attachments B, C, and D contain all of the standard forms necessary for the application for awards under these OCS programs. These forms may be photocopied for the application.

Copies of the **Federal Register** containing this announcement are available at most local libraries and Congressional District Offices for reproduction. If copies are not available at these sources, they may be obtained by writing or telephoning the office listed under the section entitled **FOR FURTHER INFORMATION** at the beginning of this announcement. In addition, they may be obtained by downloading from the OCS Electronic Bulletin Board. (See instructions under ''Contact'' at the beginning of this document.)

For purposes of this announcement, all applicants will use SF–424, SF–424A, and SF–424B, regardless of the priority area governing the project. Applications proposing construction projects will also present all required financial data using SF–424A. Instructions for completing the SF–424, SF–424A, and SF–424B are found in Attachments B, C, and D.

Part F contains instructions for the project narrative and project abstract. They will be submitted on plain bond paper along with the SF–424 and related forms.

Attachment J provides a checklist to aid applicants in preparing a complete application package for OCS.

The applicant must be aware that in signing and submitting the application for this award, it is certifying that it will comply with the Federal requirements concerning the drug-free workplace and debarment regulations set forth in Attachments E and F.

2. Application Submission

Applications must be submitted to ACF by the closing dates. Refer to ''Closing Dates'' at the beginning of this document for the specific date.

Applications may be mailed to: Department of Health and Human Services Administration for Children and Families Division of Discretionary Grants, 370 L'Enfant Promenade, S.W., 6th Floor (OCS–95–03), Washington, D.C. 20447. ATTN: Maiso Bryant

Hand-delivered applications are accepted during normal working hours of 8:00 a.m. to 4:30 p.m., Monday through Friday, on or prior to the established closing date at the below listed address.

Administration for Children and Families Division of Discretionary Grants, 6th Floor, ACF Guard Station, 901 ''D'' Street, S.W. Washington, D.C. 20447

An application will be considered to be received on time if sent on or before the closing date as evidenced by a legible U.S. Postal Service postmark or a legibly dated receipt from a commercial carrier. Private metered postmarks will not be considered acceptable as proof of timely mailing. Applications submitted by any means other than through the U.S. Postal Service or commercial carrier shall be considered as acceptable only if physically received at the above address before close of business on or before the deadline date.

Note: Applicants should note that the U.S. Postal Service does not uniformly provide a dated postmark. Before relying on this method, applicants should check with their local post office. In some instances packages presented for mailing after a predetermined time are postmarked with the next day's date. In other cases, postmarks are not routinely placed on packages. Applicants are cautioned to verify that there is a date on the package, and that it is the correct date of mailing, before accepting a receipt.

Applications which have a postmark later than the closing date, or which are hand-delivered after the closing date, will be returned to the sender without consideration in the competition.

One signed original application and four copies are required. The first page of the SF–424 must contain in the lower right-hand corner, a designation indicating under which priority area funds are being requested (See part F, section 1, subsection 11).

3. Intergovernmental Review

This program is covered under Executive Order 12372, ''Intergovernmental Review of Federal Programs,'' and 45 CFR part 100, ''Intergovernmental Review of Department of Health and Human Services Programs and Activities.'' Under the Order, States may design their own processes for reviewing and commenting on proposed Federal assistance under covered programs.

All States and Territories except Alabama, Alaska, Colorado, Connecticut, Hawaii, Idaho, Kansas, Louisiana, Minnesota, Montana, Nebraska, Oklahoma, Oregon, Pennsylvania, South Dakota, Virginia, Washington, American Samoa and Palau have elected to participate in the Executive Order process and have established Single Points of Contact (SPOCs). Applicants from these nineteen jurisdictions need take no action regarding E.O. 12372. Applicants for projects to be administered by federally-recognized Indian tribes are also exempt from the requirements of E.O. 12372. Otherwise, applicants should contact their SPOCs as soon as possible to alert them of the prospective applications and receive any necessary instructions. Applicants must submit any required material to the SPOCs as soon as possible so that the program office can obtain and review SPOC comments as part of the award process. It is imperative that the applicant submit all required materials, if any, to the SPOC and indicate the date of this

submittal (or the date of contact if no submittal is required) on the Standard Form 424, item 16a.

Under 45 CFR 100.8(a)(2), a SPOC has 60 days from the application deadline date to comment on proposed new or competing continuation awards.

SPOCs are encouraged to eliminate the submission of routine endorsements as official recommendations. Additionally, SPOCs are requested to clearly differentiate between mere advisory comments and those official State process recommendations which they intend to trigger the ''accommodate or explain'' rule.

When comments are submitted directly to ACF, they should be addressed to: Department of Health and Human Services, Administration for Children and Families, Division of Discretionary Grants, 370 L'Enfant Promenade, SW., 6th Floor, Washington, DC 20447.

A list of the Single Points of Contact for each State and Territory is included as Attachment G of this announcement.

4. Application Consideration

Applications which meet the screening requirements in sections 5 a and b below will be reviewed competitively. Such applications will be referred to reviewers for a numerical score and explanatory comments based solely on responsiveness to program priority area guidelines and evaluation criteria published in this announcement.

Applications submitted under all priority areas will be reviewed by persons outside of the OCS unit which will be directly responsible for programmatic management of the grant. The results of these reviews will assist the Director and OCS program staff in considering competing applications. Reviewers' scores will weigh heavily in funding decisions but will not be the only factors considered. Applications generally will be considered in order of the average scores assigned by reviewers. However, highly ranked applications are not guaranteed funding since the Director may also consider other factors deemed relevant including, but not limited to, the timely and proper completion of projects funded with OCS funds granted in the last five (5) years; comments of reviewers and Government officials; staff evaluation and input; geographic distribution; previous program performance of applicants; compliance with grant terms under previous DHHS grants; audit reports; investigative reports; and applicant's progress in resolving any final audit disallowances on previous OCS or other Federal agency grants. Applicants with three or more incomplete OCS grants at the time of review may be denied funding. In addition, for applications received under 1.0, OCS will consider the geographic distribution of funds among States and the relative proportion of funding among rural and urban areas in accordance with section 681(b)(1)(D) of the Act.

OCS reserves the right to discuss applications with other Federal or non-Federal funding sources to ascertain the applicant's performance record.

5. Criteria for Screening Applicants

a. Initial Screening

All applications that meet the published deadline for submission will be screened to determine completeness and conformity to the requirements of this announcement. Only those applications meeting the following requirements will be reviewed and evaluated competitively. Others will be returned to the applicants with a notation that they were unacceptable.

(1) The application must contain a Standard Form 424 ''Application for Federal Assistance'' (SF–424), a budget (SF–424A), and signed ''Assurances'' (SF 424B) completed according to instructions published in part F and attachments B, C, and D of this Program Announcement.

(2) An Executive Summary and a project abstract must also accompany the standard forms.

(3) The SF–424 and the SF–424B must be signed by an official of the organization applying for the grant who has authority to obligate the organization legally.

(4) The application must be submitted for consideration under one priority area only.

b. Pre-Rating Review

Applications which pass the initial screening will be forwarded to reviewers and/or OCS staff prior to the programmatic review to verify that the applications comply with this Program Announcement in the following areas:

(1) *Eligibility*: Applicant meets the eligibility requirements for the priority area under which funds are being requested. Proof of non-profit status must be included in the Appendices of the Project Narrative where applicable. Applicants must also be aware that the applicant's legal name as required in SF–424 (Item 5) *must match* that listed as corresponding to the Employer Identification Number (Item 6).

(2) *Number of Projects*: An application may contain only one project (except for Priority Areas 1.3, 1.4, 1.5, and 3.1 where applicants are researching various opportunities, providing assistance to current OCS grantees, providing seminars and other activities in assisting Community Development Corporations, or having a multifaceted approach to Migrants' issues) and this project must be identified as responding to one of the program priority areas stated in this Announcement.

Applicants which are not in compliance with this requirement will be ineligible for funding.

(3) *Grant amount*: The amount of funds requested does not exceed the limits indicated in Part C, 2,b for the appropriate priority area.

(4) *Written Agreement When Applicant Proposes to Make Equity Investment, Loan, or Sub-Grant*: (Sub-Priority Areas 1.1, and 1.2); The application contains a written agreement signed by the applicant and the third party which includes all of the elements required in part B.

An application may be disqualified from the competition and returned if it does not conform to one or more of the above requirements.

c. Evaluation Criteria

Applications which pass the pre-rating review will be assessed and scored by reviewers. Each reviewer will give a numerical score for each application reviewed. These numerical scores will be supported by explanatory statements on a formal rating form describing major strengths and weaknesses under each applicable criterion published in the announcement.

The in-depth evaluation and review process will use the following criteria coupled with the specific requirements contained under each program priority area as described in Part B.

(Note: the following review criteria reiterate collection of information requirements contained in Part F of this announcement. These requirements are approved under OMB Control Number 0970–0062.)

6. Criteria for Review and Evaluation of All Applications Except Sub-Priority Areas 1.3, 1.4 and 1.5

(a) Criterion I: Analysis of Need (Maximum: 5 Points)

The application documents that the project addresses a vital need in a distressed community and provides statistics and other data and information in support of its contention.

(b) Criterion II: Organizational Experience in Program Area and Staff Responsibilities (Maximum: 15 Points)

(i) Organizational Experience in Program Area (sub-rating: 0–5 points).

Documentation provided indicates that projects previously undertaken have been relevant and effective and have provided permanent benefits to the low-income population.

Organizations which propose providing training and technical assistance have detailed competence in the specific program priority area and as a deliverer with expertise in the fields of training and technical assistance. If applicable, information provided by these applicants also addresses related achievements and competence of each cooperating or sponsoring organization.

Applicable to Sub-Priority Areas 1.1, and 1.2

The applicant has demonstrated the ability to implement major activities in such areas as business development, commercial development, physical development, or financial services; the ability to mobilize dollars from sources such as the private sector (corporations, banks, etc.), foundations, the public sector, including State and local governments, or individuals; that it has a sound organizational structure and proven organizational capability; and an ability to develop and maintain a stable program in terms of business, physical or community development activities that will provide needed permanent jobs, services, business development opportunities, and other benefits to community residents.

(ii) Staff Skills, Resources and Responsibilities (sub-rating 0–10 points).

The application describes in brief resume form the experience and skills of the project director who is not only well qualified, but his/her professional capabilities are relevant to the successful implementation of the project. If the key staff person has not yet been identified, the application contains a comprehensive position description which indicates that the responsibilities to be assigned to the project director are relevant to the successful implementation of the project. The applicant has adequate facilities and resources (i.e. space and equipment) to successfully carry out the work plan. The assigned responsibilities of the staff are appropriate to the tasks identified for the project and sufficient time of senior staff will be budgeted to assure timely implementation and cost effective management of the project.

(c) Criterion III: Project Implementation (Maximum: 25 Points)

The Work Plan, or Business Plan where appropriate, is both sound and feasible. The project is responsive to the needs identified in the Analysis of Need. It sets forth realistic quarterly time targets by which the various work tasks will be completed. Critical issues or potential problems that might impact negatively on the project are defined and the project objectives can be reasonably attained despite such potential problems.

(d) Criterion IV A: Significant and Beneficial Impact (Maximum: 30 Points) (Applicable to Sub-Priority Areas 1.1, and 1.2)

(i) *Significant and Beneficial Impact (sub- rating: 0–10 points).*

The application contains a full and accurate description of the proposed use of the requested financial assistance. The proposed project will produce permanent and measurable results that will reduce the incidence of poverty in the community. The OCS grant funds, in combination with private and/or other public resources, are targeted into low-income communities, distressed communities, and/or designated enterprise zones and enterprise communities.

(ii) *Community Empowerment Consideration (Maximum: 0–10 points).*

Special consideration will be given to applicants who are located in areas which are characterized by poverty and other indicators of socio-economic distress such as a poverty rate of at least 20%, designation as an Empowerment Zone or Enterprise Community, high levels of unemployment, and high levels of incidences of violence, gang activity, crime, or drug use. Applicants should document that they were involved in the preparation and planned implementation of a comprehensive community-based strategic plan to achieve both economic and human development in an integrated manner.

(iii) *Cost-per-Job (sub-rating: 0–5 points).*

During the project period the proposed project will create new, permanent jobs or maintain permanent jobs for low-income residents at a cost-per-job below $15,000 in OCS funds.

(**Note:** The maximum number of points will be given to those applicants proposing cost-per-job estimates of $5,000 or less of OCS requested funds. Higher cost-per-job estimates will receive correspondingly fewer points.)

(iv) *Career Development Opportunities (sub- rating: 0–5 points).*

The application documents that the jobs to be created for low-income people have career development opportunities which will promote self-sufficiency.

(e) Criterion IV B: Significant and Beneficial Impact (Maximum: 30 Points) Applicable to Sub-Priority Areas 2.1, 2.2, 3.1 and 3.2)

The application contains a full and accurate description of the proposed use of the requested financial assistance. The proposed project will produce permanent and measurable results that will reduce the incidence of poverty in the areas targeted and significantly enhance the self sufficiency of program participants. Results are quantifiable in terms of program area expectations, e.g., number of units of housing rehabilitated, agricultural and non-agricultural job placements, etc. The OCS grant funds, in combination with private and/or other public resources, are targeted into low-income and/or distressed communities and/or designated empowerment zones and enterprise communities.

(f) Criterion V A: Public-Private Partnerships (Maximum: 20 Points) (Applicable to Sub-Priority Areas 1.1 and 1.2)

(i) *Mobilization of resources: (sub-rating: 15 points).*

The application documents that the applicant will mobilize from public and/or private sources cash and/or in-kind contributions valued at an amount equal to the OCS funds requested. Applicants documenting that the value of such contributions will be at least equal to the OCS funds requested will receive the maximum number of points for this Criterion. Lesser contributions will be given consideration based upon the value documented. Applicants under Sub-Priority Area 1.2 who are proposing to enter into a partnership with Historically Black Colleges and Universities are deemed to have fully met this criterion and will receive the maximum number of points if they document the participation of the HBCU.

(ii) *Integration/coordination of services: (sub-rating: 5 points).*

The applicant demonstrates a commitment to coordination with the local JOBS office and/or other employment education and training programs (such as JTPA) to ensure that welfare recipients, at-risk youth, displaced workers, public housing tenants, homeless and low-income individuals will be trained and placed in the newly created jobs. The applicant provides a written agreement from the local JOBS or other employment education and training office indicating what actions will be taken to integrate/

coordinate services that relate directly to the project for which funds are being requested.

Specifically, the agreement should include: (1) the goals and objectives that the applicant and the JOBS or other employment education and training office expect to achieve through their collaboration; (2) the specific activities/actions that will be taken to integrate/coordinate services on an on-going basis; (3) the target population that this collaboration will serve; (4) the mechanism(s) to be used in integrating/coordinating activities; (5) how those activities will be significant in relation to the goals and objectives to be achieved through the collaboration; and (6) how those activities will be significant in relation to their impact on the success of the OCS-funded project.

The applicant should also provide documentation that illustrates the organizational experience related to the employment education and training program (refer to Criterion II for guidelines).

(g) Criterion V B: Public-Private Partnerships (Maximum: 20 Points) (Applicable to Sub-Priority Areas 2.1, 2.2, 3.1, and 3.2)

The application documents that the applicant will mobilize from public and/or private sources cash and/or in-kind contributions valued at an amount equal to the OCS funds requested. Applicants documenting that the value of such contributions will be at least equal to the OCS funds requested will receive the maximum number of points for this Criterion. Lesser contributions will be given consideration based upon the value documented.

(h) Criterion VI: Budget Appropriateness and Reasonableness (Maximum: 5 points)

Funds requested are commensurate with the level of effort necessary to accomplish the goals and objectives of the project. The application includes a detailed budget break-down for each of the budget categories in the SF–424A. The applicant presents a reasonable administrative cost. The estimated cost to the government of the project also is reasonable in relation to the anticipated results.

7. Criteria for Review and Evaluation of Applications Submitted Under Sub-Priority Area 1.3

a. Criterion I: Organizational Capability and Capacity (Maximum: 20 Points)

(1) *Organizational experience in program area (sub-rating: 5 Points).* Where the applicant has a history of prior achievement in economic development, the documentation must address the relevance and effectiveness of projects undertaken, especially their cost effectiveness and the relevance and effectiveness of any services and the permanent benefits provided to the targeted population. Applicants must also indicate why they feel that they can successfully implement the project for which they are requesting funds.

(2) *Management capacity (sub-rating: 5 points).* Applicants must fully detail their ability to implement sound and effective management practices and if they have been recipients of other Federal or other governmental grants, they must also detail that they have consistently complied with financial and program progress reporting and audit requirements. Applicants should submit any available documentation on their management practices and progress reporting procedures along with a statement by a Certified or Licensed Public Accountant as to the sufficiency of the applicant's financial management system to protect adequately any Federal funds awarded under the application submitted.

(3) *Staffing (sub-rating: 5 points).* The application must fully describe (e.g., resumes) the experience and skills of key staff showing that they are not only well qualified but that their professional capabilities are relevant to the successful implementation of the project.

(4) Staffing responsibilities (sub-rating: 5 points). The application must describe how the assigned responsibilities of the staff are appropriate to the tasks identified for the project.

b. Criterion II: Significant and Beneficial Impact (Maximum: 35 Points)

The work plan funded under this announcement must show that there is a clearly identified need in a low-income area which is not being effectively addressed currently.

Project funds under this announcement must be used to develop a Business Plan for a project which would produce permanent and measurable results that will reduce the incidence of poverty in the areas targeted and mobilize non-discretionary program dollars from private sector individuals, public resources, corporations, and foundations if the project is implemented. The project around which the Business Plan is developed with the use of OCS grant funds must be targeted into low-income communities, and/or designated empowerment zones or enterprise communities with the goals of increasing the economic conditions and social self-sufficiency of residents. Activities must be designed to achieve the specific Program Priority Area 1.3 objectives as defined in this program announcement.

c. Criterion III: Project Implementation and Evaluation (Maximum: 30 Points)

(1) Project implementation component (sub-rating: 25 points). The application must contain a detailed and specific work plan that is both sound and feasible. It must set forth realistic quarterly time targets by which the various work tasks will be completed. Because quarterly time schedules are used by OCS as a key instrument to monitor progress, failure to include these time targets may seriously reduce an applicant's point score in this criterion. It must define critical issues or potential problems that might impact negatively on the project and it must indicate how the project objectives will be attained notwithstanding any such potential problems.

(2) *Evaluation component (sub-rating: 5 points).* All proposals should include a self-evaluation component. The evaluation data collection and analysis procedures should be specifically oriented to assess the degree to which the stated goals and objectives are achieved. Qualitative and quantitative measures reflective of the scheduling and task delineation in (1) above should be used to the maximum extent possible. This component should indicate the ways in which the potential grantee would integrate qualitative and quantitative measures of accomplishment and specific data into its program progress reports that are required by OCS from all grantees.

d. Criterion IV: Budget Appropriateness and Reasonableness (Maximum: 15 points)

Each applicant should carefully review the requirements of Program Sub-Priority Area 1.3 and the budget submitted must coincide with those requirements.

The proposal's request for funds must include a detailed budget breakout for each of the pertinent budget categories in part III, section B of the SF–424. (Please identify any positions for which less than full-time funding is requested.)

8. Criteria for Review and Evaluation of Applications Submitted Under Sub-Priority Area 1.4

(a) Criterion I: Organizational Experience in Program Area and Staff Responsibilities (Maximum: 20 points)

(i) *Organizational Experience in Program Area (sub-rating: 0–10 points).*

Applicant has documented the capability to provide leadership in solving long-term and immediate problems locally and/or nationally in such areas as business development, commercial development, organizational and staff development, board training, and micro-entrepreneurship development. Applicant must document a capability (including access to a network of skilled individuals and/or organizations) in two or more of the following areas: Business Management, including strategic planning and fiscal management; Finance, including development of financial packages and provision of financial/accounting services; and Regulatory Compliance, including assistance with zoning and permit compliance. Further, the applicant has the demonstrated ability to mobilize dollars from sources such as the private sector (corporations, banks, foundations, etc.) and the public sector, including state and local governments. Applicant also demonstrates that it has a sound organizational structure and proven organizational capability as well as an ability to develop and maintain a stable program in terms of business, physical or community development activities that have provided permanent jobs, services, business development opportunities, and other benefits to poverty community residents.

Applicants must indicate why they feel that their successful experiences would be of assistance to existing grantees which are experiencing difficulties in implementing their projects.

(ii) *Staff Skills, Resources and Responsibilities (sub-rating 0–10 points).* The application describes in brief resume form the experience and skills of the project director who is not only well qualified, but who has professional capabilities relevant to the successful implementation of the project. If the key staff person has not yet been identified, the application contains a comprehensive position description which indicates that the responsibilities to be assigned to the project director are relevant to the successful implementation of the project. The applicant has adequate facilities and resources (i.e. space and equipment) to successfully carry out the work plan. The assigned responsibilities of the staff are appropriate to the tasks identified for the project and sufficient time of senior staff will be budgeted to assure timely implementation and cost effective management of the project.

(b) Criterion II: Work Program (Maximum: 30 Points)

Based upon the applicant's knowledge and experience related to OCS's Discretionary Grants Program (particularly community economic development), the application should demonstrate in some specificity a thorough understanding of the problems a grantee may encounter in implementing a successful project. The application should include a strategy for assessing the specific nature of the problems, outlining a course of action and identifying the resources required to resolve the problems.

(c) Criterion III: Significant and Beneficial Impact (Maximum: 30 Points)

Project funds under this sub-priority area must be used for the purposes of transferring expertise directly, or by a contract with a third party, to other OCS funded grantees. Applicants must document how the success or failure of collaboration with these grantees will be documented.

Applicants must demonstrate an ability to disseminate results on the kinds of programmatic and administrative expertise transfer efforts in which they participated and successful strategies that they may have developed to share expertise with grantees during the grant period. Applicants must also state whether the results of the project will be included in a handbook, a progress paper, an evaluation report or a general manual and why the particular methodology chosen would be most effective.

d. Criterion IV: Public-Private Partnerships (15 Points)

The applicant demonstrates that it has worked with local, regional, state or national offices to ensure that welfare recipients, at-risk youth, displaced workers, public housing tenants, homeless and low-income individuals have been trained and placed in newly created jobs. Applicant should demonstrate how it will design a comprehensive strategy which makes use of other available resources to resolve typical and recurrent grantee problems.

e. Criterion V: Budget Appropriateness and Reasonableness (Maximum: 5 Points)

Applicant documents that the funds requested are commensurate with the level of effort necessary to accomplish the goals and objectives of the project. The application includes a detailed budget break-down for each of the appropriate budget categories in the SF–424A. The estimated cost to the government of the project also is reasonable in relation to the anticipated results.

9. Criteria for Review and Evaluation of Applications submitted under Sub-Priority Area 1.5

(a) Criterion I: Need for Assistance (Maximum: 10 Points)

The application documents that the project addresses a vital nationwide need related to the purposes of Priority Area 1.0 and provides data and information in support of its contention.

(b) Criterion II: Organizational Experience in Program Area and Staff Responsibilities (Maximum: 20 Points)

(i) Organizational Experience (0–10 Points) Applicant has documented the capability to provide leadership in solving long-term and immediate problems locally and/or nationally in such areas as business development, commercial development, organizational and staff development, board training, and micro-entrepreneurship development. Applicant must document a capability (including access to a network of skilled individuals and/or organizations) in two or more of the following areas: Business Management, including strategic planning and fiscal management; Finance, including development of financial packages and provision of financial/accounting services; and Regulatory Compliance, including assistance with zoning and permit compliance.

(ii) Staff Skills (0–10 points) The applicants's proposed project director and primary staff are well qualified and their professional experiences are relevant to the successful implementation of the proposed project.

(c) Criterion III: Work Plan (Maximum 35 Points)

Based upon the applicant's knowledge and experience related to OCS's Discretionary Grants Program (particularly community economic development), the applicant must develop and submit a detailed and specific work plan that is both sound and feasible. The work plan should—

(i) Demonstrate that all activities are comprehensive and nationwide in scope, and adequately described and appropriately related to the goals of the program (0–10 points).

(ii) Demonstrate in some specificity a thorough understanding of the kinds of training and technical assistance that can be provided to the network of Community Development Corporations (0–10 points).

(iii) Delineate the tasks and sub-tasks involved in the areas necessary to carry out the responsibilities to include training, technical assistance, research, outreach, seminars, etc. (0–5 points).

(iv) State the intermediate and end products to be developed by task and sub-task (0–5 points).

(v) Provide realistic time frames and chronology of key activities for the goals and objectives (0–5 points).

(d) Criterion IV: Significant and Beneficial Impact (Maximum: 25 Points)

Project funds under this sub-priority area must be used for the purpose of providing training and technical assistance on a national basis to the network of Community Development Corporations. Applicant must document how the success or failure of the assistance provided will be documented.

(i) Application should adequately describe how the project will assure long-term program and management improvements for Community Development Corporations (0–10 points);

(ii) The project will impact on a significant number of Community Development Corporations (0–10 points);

(iii) Applicant should document how the project will leverage or mobilize significant other non-federal resources for the direct benefit of the project (0–5 points);

(e) Criteria V: Budget Reasonableness (Maximum 10 Points)

(i) The resources requested are reasonable and adequate to accomplish the project (0–5 points).

(ii) Total costs are reasonable and consistent with anticipated results (0–5 points).

Part E—Contents of Application and Receipt Process

1. Contents of Application

Each application, whether involving construction or not, should include one original and four additional copies of the following:

a. A signed ''Application for Federal Assistance'' (SF–424);

b. ''Budget Information-Non-Construction Programs'' (SF–424A);

c. A signed ''Assurances-Non-Construction Programs'' (SF–424B);

d. A Project Abstract (a paragraph which succinctly describes the project (in *300* characters or less));

e. A Project Narrative consisting of the following elements preceded by a consecutively numbered Table of Contents that will describe the project in the following order:

(i) Eligibility Confirmation

(ii) Analysis of Need (except for Sub-Priorities 1.4, 1.5)

(iii) Organizational Experience and Staff Responsibilities

(iv) Work Program (including Executive Summary)

(v) Appendices, including relevant sections of By-Laws and/or Articles of Incorporation which confirm eligibility of organization as a CDC; proof of non-profit status where applicable; resumes; written agreements re grants, coordination with JOBS, etc.; Single Point of Contact comments, where applicable; certification regarding anti-lobbying activities; and a disclosure of lobbying activities.

The application package should not exceed 50 pages for applications submitted under sub-priority areas 1.1 and 1.2., and 30 pages for all applications submitted under the other sub-priority areas.

Applications should be two holed punched at the top center and fastened with a compressor slide paper fastener or a binder clip. The submission of bound applications, or applications enclosed in binders, is especially discouraged.

Applications must be uniform in composition since OCS may find it necessary to duplicate them for review purposes. Therefore, applications must be submitted on white 8 1/2 X 11 inch paper only. They must not include colored, oversized or folded materials. Do not include organizational brochures or other promotional materials, slides, films, clips, etc. in the proposal. They will be discarded, if included.

2. Acknowledgement of Receipt

All applicants will receive an acknowledgement notice with an assigned identification number. Applicants are requested to supply a self-addressed mailing label with their application which can be attached to this acknowledgement notice. The identification number and the program priority area letter code must be referred to in all subsequent communications with OCS concerning the application. If an acknowledgement is not received within three weeks after the deadline date, please notify ACF by telephone (202) 401–9365.

Part F—Instructions for Completing Application Package

(Approved by the Office of Management and Budget under Control Number 0970–0062. The standard forms attached to this announcement shall be used to apply for funds for all priority areas described in this announcement.)

It is suggested that you reproduce the SF–424 and SF–424A, and type your application on the copies. If an item on the SF–424 cannot be answered or does not appear to be related or relevant to the assistance requested, write ''NA'' for ''Not Applicable.''

Prepare your application in accordance with the standard instructions given in Attachments B and C corresponding to the forms, as well as the OCS specific instructions set forth below:

1. SF–424 ''Application for Federal Assistance'' Item

1. For the purposes of this announcement, all projects are considered ''Applications''; there are no ''Pre-Applications.'' Also for the purposes of this announcement, construction projects are those which involve major renovations or new construction. All others are considered non-construction. Check the appropriate box under ''Application.''

5. and 6. The legal name of the applicant must match that listed as corresponding to the Employer Identification Number. Where the applicant is a previous Department of Health and Human Services grantee, enter the Central Registry System Employee Identification Number (EIN) and the Payment Identifying Number (PIN), if one has been assigned, in the Block entitled ''Federal Identifier'' located at the top right hand corner of the form.

7. If the applicant is a non-profit corporation, enter ''N'' in the box and specify ''non-profit corporation'' in the space marked ''Other.'' Proof of non-profit status, such as IRS determination or appropriate sections of the Articles of Incorporation, or By-laws, must be included as an appendix to the project narrative.

8. For the purposes of this announcement, all applications are ''New''.

9. Enter DHHS-ACF/OCS.

10. The Catalog of Federal Domestic Assistance number for OCS programs covered under this announcement is 93.570. The title is ''CSBG Discretionary Awards.''

11. The following letter program priority area designations must be used:

UR—for Sub-Priority Area 1.1. Urban and Rural Community Economic Development (Operational)

HB—for Sub-Priority Area 1.2. Urban and Rural Community Economic Development (HBCU Set-Aside)

PD—for Sub-Priority Area 1.3. Urban and Rural Community Economic Development (Pre-Developmental Set-Aside)

AM—for Sub-Priority Area 1.4. Administrative and Management (Set-Aside)

UT—for Sub-Priority Area 1.5. Technical Assistance (Set-Aside)

RH—for Sub-Priority Area 2.1. Rural Housing Repairs and Rehabilitation (including rental housing for low-income individuals).

RF—for Sub-Priority Area 2.2. Rural Community Facilities Development (Water and Waste Water Treatment Systems Development)

MS—for Sub-Priority Area 3.1. Assistance for Migrants and Seasonal Farmworkers (General)

HM—for Sub-Priority Area 3.2 Assistance for Migrants and Seasonal Farmworkers (HBCU Set-Aside)

2. SF–424A—''Budget Information—Non-Construction Programs'' See Instructions accompanying this form as well as the instructions set forth below:

In completing these sections, the ''Federal Funds'' budget entries will relate to the requested OCS discretionary funds only, and ''Non-Federal'' will include mobilized funds from all other sources—applicant, state, local, and other. Federal funds other than requested OCS discretionary funding should be included in ''Non-Federal'' entries.

The budget forms in SF–424A are only to be used to present grant administrative costs and major budget categories.

Financial data that is generated as part of a project Business Plan or other internal project cost data must be separate and should appear as part of the project Business Plan or other project implementation data.

Sections A and D of SF–424A must contain entries for both Federal (OCS) and non-Federal (mobilized) funds. Section B contains entries for Federal (OCS) funds only. Clearly identified continuation sheets in SF–424A format should be used as necessary.

Section A—Budget Summary

Lines 1–4

Col. (a): Line 1 Enter ''CSBG Discretionary'';

Col. (b): Line 1 Enter ''93.570'';

Col. (c) and (d): Applicants should leave columns (c) and (d) blank.

Col. (e)–(g): For line 1, enter in columns (e), (f) and (g) the appropriate amounts needed to support the project for the budget period.

Line 5 Enter the figures from Line 1 for all columns completed as required, (c), (d), (e), (f), and (g).

Section B—Budget Categories

Allowability of costs are governed by applicable cost principles set forth in 45 CFR Parts 74 and 92. Columns (1) and (5):

In OCS applications, it is only necessary to complete Columns (1) and (5).

Column 1: Enter the total requirements for OCS Federal funds by the Object Class Categories of this section:

Personnel-Line 6a: Enter the total costs of salaries and wages of applicant/grantee staff only. Do not include costs of consultants or personnel costs of delegate agencies or of specific project(s) or businesses to be financed by the applicant.

Fringe Benefits-Line 6b: Enter the total costs of fringe benefits unless treated as part of an approved indirect cost rate which is entered on line 6j. Provide a breakdown of amounts and percentages that comprise fringe benefit costs.

Travel-Line 6c: Enter total costs of all travel by employees of the project. Travel costs for the Executive Director or Project Director to attend a two day national workshop in Washington, D.C. should be included. Do not enter costs for consultant's travel. Provide justification for requested travel costs.

Equipment-Line 6d: Enter the total costs of all non-expendable personal property to be acquired by the project. ''Non-expendable personal property'' means tangible non-expendable personal property having a useful life of more than one year and an acquisition cost of $5,000 or more per unit.

Supplies-Line 6e: Enter the total costs of all tangible personal property (supplies) other than that included on line 6d.

Contractual-Line 6f: Enter the total costs of all contracts, including (1) procurement contracts (except those which belong on other lines such as equipment, supplies, etc.) and (2) contracts with secondary recipient organizations including delegate agencies and specific project(s) or businesses to be financed by the applicant. Also include any contracts with organizations for the provision of technical assistance. Do not include payments to individual service contractors on this line. If available at the time of application, attach a list of contractors indicating the name of the organization, the purpose of the contract and the estimated dollar amount of the award.

Note: Whenever the applicant/grantee intends to delegate part of the program to another agency, the applicant/grantee must submit Sections A and B of this form (SF–424A), completed for each delegate agency by agency title, along with the required supporting information referenced in the applicable instructions. The total costs of all such agencies will be part of the amount shown on Line 6f. Provide back-up documentation identifying name of contractor, purpose of contract and major cost elements.

Construction-Line 6g: Enter the costs of renovation, repair, or new construction. Provide narrative justification and breakdown of costs.

Other-Line 6h: Enter the total of all other costs. Such costs, where applicable, may include but are not limited to insurance, food, medical and dental costs (noncontractual), fees and travel paid directly to individual consultants, space and equipment rentals, printing and publication, computer use, training costs, including tuition and stipends, training service costs including wage payments to individuals and supportive service payments, and staff development costs.

Total Direct Charges-Line 6i: Show the total of Lines 6a through 6h.

Indirect Charges-Line 6j: Enter the total amount of indirect costs. This line should be used only when the applicant currently has an indirect cost rate approved by the Department of Health and Human Services or another Federal agency or is awaiting such approval. With the exception of local governments, applicants should enclose a copy of the current rate agreement if it was negotiated with a Federal agency other than the Department of Health and Human Services.

If the applicant organization is in the process of initially developing or renegotiating a rate, it should immediately, upon notification that an award will be made, develop a tentative indirect cost rate proposal based on its most recently completed fiscal year in accordance with the principles set forth in the pertinent *DHHS Guide for Establishing Indirect Cost Rates*, and submit it to the appropriate DHHS Regional Office.

It should be noted that when an indirect cost rate is requested, those costs included in the indirect cost pool should not be also charged as direct costs to the grant.

Totals-Line 6k: Enter the total amounts of Lines 6i and 6j. The total amount shown in Section B, Column (5), Line 6k, should be the same as the amount shown in Section A, Line 5, Column (e).

Program Income-Line 7: Enter the estimated amount of income, if any, expected to be generated from this project. Separately show expected

program income generated from OCS support and income generated from other mobilized funds. Do not add or subtract this amount from the budget total. Show the nature and source of income in the program narrative statement.

Column 5: Carry totals from Column 1 to Column 5 for all line items.

Section C—Non-Federal Resources

This section is to record the amounts of ''non-Federal'' resources that will be used to support the project. ''Non-Federal'' resources mean other than OCS funds for which the applicant is applying. Therefore, mobilized funds from other Federal programs, such as the Job Training Partnership Act program, should be entered on these lines. Provide a brief listing of the non-Federal resources on a separate sheet and describe whether it is a grantee-incurred cost or a third-party in-kind contribution. The firm commitment of these resources must be documented and submitted with the application in order to be given credit in the Public-Private Partnerships criterion.

Except in unusual situations, this documentation must be in the form of letters of commitment from the organization(s)/individuals from which funds will be received.

Line 8:

Column (a): Enter the project title.

Column (b): Enter the amount of contributions to be made by the applicant to the project.

Column (c): Enter the State contribution. If the applicant is a State agency, enter the non-Federal funds to be contributed by the State other than the applicant.

Column (d): Enter the amount of cash and in-kind contributions to be made from all other sources.

Column (e): Enter the total of columns (b), (c), and (d). Lines 9, 10, and 11 should be left blank.

Line 12: Carry the total of each column of Line 8, (b) through (e). The amount in Column (e) should be equal to the amount on Section A, Line 5, column (f).

Section D—Forecasted Cash Needs

Line 13: Enter the amount of Federal (OCS) cash needed for this grant by quarter. During the budget period for grants which are more than twelve (12) months, submit a separate sheet for each additional twelve (12) months or portion thereof.

Line 14: Enter the amount of cash from all other sources needed by quarter during the budget period.

Line 15: Enter the total of Lines 13 and 14.

Section E—Budget Estimates of Federal Funds Needed for Balance of Project(s)

Completion not required.

Section F—Other Budget Information

Line 21—Use this space and continuation sheets as necessary to fully explain and justify the major items included in the budget categories shown in Section B. Include sufficient detail to facilitate determination of allowability, relevance to the project, and cost benefits. Particular attention must be given to the explanation of any requested direct cost budget item which requires explicit approval by the Federal agency. Budget items which require identification and justification shall include, but not be limited to, the following:

A. Salary amounts and percentage of time worked for those key individuals who are identified in the project narrative;

B. Any foreign travel;

C. A list of all equipment and estimated cost of each item to be purchased wholly or in part with grant funds which meet the definition of nonexpendable personal property provided on Line 6d, Section B. Need for equipment must be supported in program narrative.

D. Contractual: Major items or groups of smaller items; and

E. Other: group into major categories all costs for consultants, local transportation, space, rental, training allowances, staff training, computer equipment, etc. Provide a complete breakdown of all costs that make up this category.

Line 22—Enter the type of HHS or other Federal agency approved indirect cost rate (provisional, predetermined, final or fixed) that will be in effect during the funding period, the estimated amount of the base to which the rate is applied and the total indirect expense. Also, enter the date the rate was approved, where applicable. Attach a copy of the rate agreement if it was negotiated with a Federal agency other than the Department of Health and Human Services.

Line 23—Provide any other explanations and continuation sheets required or deemed necessary to justify or explain the budget information.

3. SF–424B ''Assurances-Non-Construction''—All applicants, whether or not project involves construction, must file the Standard Form 424B, ''Assurances: Non-Construction Programs.'' Applicants must sign and return the Standard Form 424B, found at Attachment D, with their applications.

4. Restrictions on Lobbying Activities—Applicants must provide a certification for concerning Lobbying. Prior to receiving an award in excess of $100,000, applicants shall furnish an executed copy of the lobbying certification. Applicants must sign and return the certification, found at Attachment H, with their applications.

5. Disclosure of Lobbying Activities, SF–LLL: Fill out, sign and date form found at Attachment H, if applicable.

6. Project Abstract—The project abstract is a brief summary of the project to include specific benefits such as number of jobs to be created, especially jobs for low-income individuals. The abstract must not exceed 300 characters (including words, spaces and punctuation) on a separate sheet of plain paper headed by the applicant's name as shown in item 5 of the SF 424 and the priority area number as shown by you at the bottom of the SF 424.

7. Project Narrative—The project narrative must address the specific concerns mentioned under the relevant priority area description in Part B. The narrative should provide information on how the application meets the evaluation criteria in Part D, Section 5 c of this Program Announcement and should follow the format below:

a. Eligibility Confirmation

This section must explain how the applicant has complied with each of the basic requirements listed in Part D, 5b(1)-(5), i.e., (1) that the applicant meets the eligibility requirements for the sub-priority area under which funds are being requested; (2) an application submitted under subpriority areas 1.1, 1.2, 2.1, 2.2, or 3.2 contains only one project; (3) the amount of funds requested does not exceed the limits indicated in Part C, Section 2, b for the appropriate sub-priority area; (4) (Sub-Priority Areas 1.1, and 1.2) if an applicant proposes to use OCS funds for an equity investment, a loan, or a sub-grant, the application contains a written agreement signed by the applicant and the third party which includes all of the elements required in Part B. An application may be disqualified from the competition and returned if it does not conform to one or more of the above requirements.

b. Analysis of Need

The application should include a description of the target area and population to be served as well as a discussion of the nature and extent of the problem to be solved. It should also include documentation supportive of its needs assessment such as employment statistics, housing statistics, etc.

c. Organizational Experience and Staff Responsibilities

(i) *Organizational Experience.*

Each applicant must document competence in the specific program priority area under which an application is submitted.

Documentation must be provided which addresses the relevance and effectiveness of projects previously undertaken in the specific priority area for which funds are being requested and especially their cost effectiveness, the relevance and effectiveness of any services provided, and the permanent benefits provided to the low-income population. Organizations which propose providing training and technical assistance must detail their competence in the specific program priority area and as a deliverer with expertise in the fields of training and technical assistance. If applicable, information provided by these applicants must also address related achievements and competence of each cooperating or sponsoring organization.

Applicable to Sub-Priority Areas 1.1, 1.2 and 1.4

Applicants in these priority areas must also document a firmly established and quantifiable performance record that shows the following:

—The ability to implement major activities such as business development, commercial development, physical development, or financial services;
—Successful working relationships within the community including public officials, financial institutions, corporations, other community organizations and residents;
—A sound asset base and organizational structure in terms of (a) net worth, (b) management stability, and (c) organizational capability;
—An ability to develop and maintain a stable program in terms of business, physical or community development activities that will provide needed permanent jobs, services, business development opportunities and other benefits to community residents, and impact on community-wide economic problems and needs;
—Sound administrative and fiscal systems and controls, and the ability to establish and maintain partnerships with the private sector in such forms as financial support, volunteerism or executives on loan.

(ii) *Staff Skills, Resources and Responsibilities.* The application must fully describe (e.g. a resume or position description) the experience and skills of the proposed project director showing that the individual is not only well qualified but that his/her professional capabilities are relevant to the successful implementation of the project.

The application must include statements regarding who will have the responsibilities of the chief executive officer, who will be responsible for grant coordination with OCS, and how the assigned responsibilities of the staff are appropriate to the tasks identified for the project. It must show clearly that sufficient time of senior staff will be budgeted to assure timely implementation and cost effective management of the project.

d. Work Program

The application must contain a detailed and specific work program, or Business Plan where appropriate, (to include an Executive Summary) that is both sound and feasible. (For those applicants submitting proposals under Sub-Priority Areas 1.1, and 1.2, the Business Plan will be accepted in lieu of the work program.) The Executive Summary should not exceed five pages. This summary must address the program principles within this announcement and document that the proposed project will have national or regional significance. The work program will be evaluated according to Criteria III, IV, and V set forth in Part D of this announcement: Project Implementation, Significant and Beneficial Impact, and Public-Private Partnerships.

Projects funded under this announcement must be designed to produce permanent and measurable results that will reduce the incidence of poverty in the areas targeted. The OCS grant funds, in combination with private and/or other public resources, must be targeted into low-income, distressed communities, and/or designated empowerment zones or enterprise communities. Projects must be designed to achieve the specific program priority area objectives defined in this Program Announcement.

It must set forth realistic quarterly time targets by which the various work tasks will be completed. It must identify critical issues or potential problems that might impact negatively on the project and it must indicate how the project objectives will be attained despite such potential problems.

If an applicant is proposing a project which will affect a property listed in, or eligible for inclusion in the National Register of Historic Places, it must identify this property in the narrative and explain how it has complied with the provisions of Section 106 of the National Historic Preservation Act of 1966 as amended. If there is any question as to whether the property is listed in or eligible for inclusion in the National Register of Historic Places, the applicant should consult with the State Historic Preservation Officer. (See Attachment D: SF–424B, Item 13 for additional guidance.) The applicant should contact OCS early in the development of its application for instructions regarding compliance with the Act and data required to be submitted to the Department of Health and Human Services. Failure to comply with the cited Act may result in the application being ineligible for funding consideration.

Applicable to Sub-Priority Areas 1.1, and 1.2

Applications submitted under Sub-Priority Areas 1.1, and 1.2 which propose to use the requested OCS funds to make an equity investment or a loan to a business concern, including a wholly-owned subsidiary, or to make a sub-grant with a portion of the OCS funds, must include a written agreement between the community development corporation and the recipient of the grant funds which contains all of the elements listed in Part B under the appropriate Priority Area.

Applications submitted under Sub-Priority Areas 1.1, and 1.2 must include a complete Business Plan where it is appropriate to the project/venture. An application that does not include a Business Plan where one is appropriate may be disqualified and returned to the applicant.

In some cases a Business Plan may not be required under the Priority Areas. All applicants under the Priority Areas, however, must nevertheless submit the information which is required in Sections 7 through 10, as set forth below.

The Business Plan is one of the major components that will be evaluated by OCS to determine the feasibility of an economic development project. It must be well prepared and address all the major issues noted herein.

The following guidelines show what should be included in order to produce a complete and professional Business Plan which makes an orderly presentation of the facts necessary to be judged responsive to the program announcement.

Because the guidelines were written to cover a variety of possibilities, rigid adherence to them is not possible nor even desirable for all projects. For example, a plan for a service business would not require a discussion of manufacturing nor product design.

The Business Plan should include the following:

1. *The business and its industry.* This section should describe the nature and history of the business and provide some background on its industry.

a. *The Business:* As a legal entity; the general business category;

b. *Description and Discussion of Industry:* Current status and prospects for the industry;

2. *Products and Services:* This section deals with the following:

a. *Description:* Describe in detail the products or services to be sold;

b. *Proprietary Position:* Describe proprietary features if any of the product, e.g. patents, trade secrets;

c. *Potential:* Features of the product or service that may give it an advantage over the competition;

3. *Market Research and Evaluation:* This section should present sufficient information to show that the product or service has a substantial market and can achieve sales in the face of competition;

a. *Customers:* Describe the actual and potential purchasers for the product or service by market segment.

b. *Market Size and Trends:* State the size of the current total market for the product or service offered;

c. *Competition:* An assessment of the strengths and weaknesses of competitive products and services;

d. *Estimated Market Share and Sales:* Describe the characteristics of the product or service that will make it competitive in the current market;

4. *Marketing Plan:* The marketing plan should detail the product, pricing, distribution, and promotion strategies that will be used to achieve the estimated market share and sales projections. The marketing plan must describe what is to be done, how it will be done and who will do it. The plan should address the following topics—Overall Marketing Strategy, Packaging, Service and Warranty, Pricing, Distribution and Promotion.

5. *Design and Development Plans:* If the product, process or service of the proposed venture requires any design and development before it is ready to be placed on the market, the nature and extent and cost of this work should be fully discussed. The section should cover items such as Development Status and Tasks, Difficulties and Risks, Product Improvement and New Products, and Costs.

6. *Manufacturing and Operations Plan:* A manufacturing and operations plan should describe the kind of facilities, plant location, space, capital equipment and labor force (part and/or full time and wage structure) that are required to provide the company's product or service.

7. *Management Team:* The management team is the key in starting and operating a successful business. The management team should be committed with a proper balance of technical, managerial and business skills, and experience in doing what is proposed. This section must include a description of: the key management personnel and their primary duties; compensation and/or ownership; the organizational structure; Board of Directors; management assistance and training needs; and supporting professional services.

8. *Overall Schedule:* A schedule that shows the timing and interrelationships of the major events necessary to launch the venture and realize its objectives. Prepare, as part of this section, a month-by-month schedule that shows the timing of such activities as product development, market planning, sales programs, and production and operations. Sufficient detail should be included to show the timing of the primary tasks required to accomplish each activity.

9. *Critical Risks and Assumptions:* The development of a business has risks and problems and the Business Plan should contain some explicit assumptions about them. Accordingly, identify and discuss the critical assumptions in the Business Plan and the major problems that will have to be solved to develop the venture. This should include a description of the risks and critical assumptions relating to the industry, the venture, its personnel, the product's market appeal, and the timing and financing of the venture.

10. *Community Benefits:* The proposed project must contribute to economic, community and human development within the project's target area. A section that describes and discusses the potential economic and non-economic benefits to low-income members of the community must be included as well as a description of the strategy that will be used to identify and hire individuals being served by public assistance programs and how linkages with community agencies/organizations administering the JOBS program will be developed. The following project benefits must be described:

Economic

—Number of permanent jobs that will be created for low-income people during the grant period;
—Number of jobs to be created for low-income people that will have career development opportunities and a description of those jobs
—Number of jobs that will be filled by individuals on public assistance;
—Ownership opportunities created for poverty-level project area residents;
—Specific steps to be taken to promote the self-sufficiency of program participants. Other benefits which might be discussed are:

Human Development

—New technical skills development and associated career opportunities for community residents;
—Management development and training.

Community Development

—Development of community's physical assets;
—Provision of needed, but currently unsupplied, services or products to community;
—Improvement in the living environment.

11. The Financial Plan: The Financial Plan is basic to the development of a Business Plan. Its purpose is to indicate the project's potential and the timetable for financial self-sufficiency. In developing the Financial Plan, the following exhibits must be prepared for the first three years of the business' operation:

a. Profit and Loss Forecasts-quarterly for each year;

b. Cash Flow Projections-quarterly for each year;

c. Pro forma balance sheets-quarterly for each year;

d. Initial sources of project funds;

e. Initial uses of project funds; and

f. Any future capital requirements and sources.

Applicable to Sub-Priority Area 1.4 Only

An applicant in this priority area must document its experience and capability in two or more of the following areas:

—Business/Development;
—Micro-Entrepreneurship Development;
—Commercial Development;
—Organizational and Staff Development;
—Board Training;
—Business Management, including Strategic Planning and Fiscal Management;
—Finance, including Business Packaging and Financial/Accounting Services, and/or
—Regulatory Compliance including Zoning and Permit Compliance

The applicant must document staff competence or the accessibility of third party resources with proven competence. If the work program requires the significant use of third

party (consultant/contractor) resources, those resources should be identified and resumes of the individuals or key organizational staff provided. Resumes of the applicant's staff, who are to be directly involved in programmatic and administrative expertise sharing, should also be included. The applicant must document successful experience in the mobilization of resources (both cash and in-kind) from private and public sources. The applicant must also clearly state how the information learned from this project may be disseminated to other interested grantees.

Applicable to Sub-Priority Area 1.5 Only

An applicant in this priority area must document its experience and capability in implementing projects national in scope and have significant and relative experiences in working with Community Development Corporations.

The applicant must demonstrate an ability to disseminate results on the kinds of assistance provided and successful strategies that it may have developed to serve CDCs during the grant period.

Applicable to Sub-Priority Area 2.1 Only

Each applicant must include a full discussion of the project including the following information:

—Basic Housing Data for Targeted Area. Information on the number of sub-standard housing units available to low-income people in the target area, deficiencies of the housing units to be repaired, i.e., lack of or inadequate plumbing, upgrading of electrical systems, etc., new construction inventory, property values, rents and mortgage rates. While specific census data may be included, this information must be project specific. Applicants must show that other Federal programs do not exist to address the rehabilitation needs of the targeted area.

—*Priorities.* Provide a rationale for the strategies and priorities for which OCS support is requested.

—*Participant Application Process.* A description of the participant application process including: (a) Verification of participant need and income eligibility, (b) proposed diagnostic repair forms and contract bid procedures (where applicable), and (c) completion verification and quality workmanship assurance procedures.

—*Types of Work to be Performed.* The quantitative and qualitative measures in the work plan should reflect the types of work to be performed, e.g. (a) technical assistance and training for each proposed organization/community; and/or (b) repairs or rehabilitation or construction work, noting which types of work will be done in order to bring properties up to minimum housing standards, inspection procedures and construction schedules.

Applications proposing to repair or rehabilitate low-income rental housing (see Part B, Sub-Priority Area 2.1, regarding restrictions) must state the current rents for the units in question as well as what rents will be charged for the rehabilitated units. Applicants should also state the number of low-income residents who will be helped to purchase or acquire adequate housing.

—*Job Creation.* Data regarding the number of direct jobs that will be created in the proposed project, noting the number of low-income residents that will be trained and/or placed in these jobs.

—*Public-Private Partnership.* A description of the degree of involvement by private sector individuals, corporations, and foundations in the implementation of the project and the amount of dollars which will be mobilized.

Applicable to Sub-Priority Area 2.2

Each applicant must include a full discussion of how the proposed use of funds will enable low-income rural communities to develop the capability and expertise to establish and maintain affordable, adequate and safe water and waste water systems. Applicants must also discuss how they will disseminate information about water and waste water programs serving rural communities, and how they will better coordinate Federal, State, and local water and waste water program financing and development to assure improved service to rural communities.

Among the benefits that merit discussion under this sub-priority area are: The number of rural communities to be provided with technical and advisory services; the number of rural poor individuals who are expected to be directly served by applicant-supported improved water and waste water systems; the decrease in the number of inadequate water systems related to applicant activity; the number of newly-established and applicant-supported treatment systems (all of the above may be expressed in terms of equivalent connection units); the increase in local capacity in engineering and other areas of expertise; and the amount of non-discretionary program dollars expected to be mobilized.

Applicable to Sub-Priority Areas 3.1 and 3.2

Each applicant must include a full discussion of the proposed project and how it will address one or more farmworker needs as described in Part B.

Among the benefits which merit discussion under these priority areas are: The number of farmworkers who are expected to improve their agricultural skills and thus improve their agricultural employment situation; the number of farmworkers and/or their dependents who will be afforded an opportunity to continue their formal education; the number of farmworkers/families who will receive crisis nutritional relief, emergency health and social services referrals and assistance, and assistance in the development of self-help systems of food production; the number of farmworkers who are expected to gain longer term or permanent private sector employment in areas outside agriculture; the number of farmworkers who will receive help in the areas of housing; the number of housing units to be repaired or rehabilitated; the degree and kind of such help; the amount of non-Discretionary program dollars expected to be mobilized, and the degree of private sector involvement that will be utilized in developing and carrying out projects funded under this Announcement.

Part G—Post Award Information and Reporting Requirements

Following approval of the applications selected for funding, notice of project approval and authority to draw down project funds will be made in writing. The official award document is the Financial Assistance Award which provides the amount of Federal funds approved for use in the project, the budget period for which support is provided, the terms and conditions of the award, the total project period for which support is contemplated, and the total financial participation from the award recipient.

General Conditions and Special Conditions (where the latter are warranted) which will be applicable to grants, are subject to the provisions of 45 CFR Parts 74 and 92.

Grantees will be required to submit semi-annual progress and financial reports (SF–269) as well as a final progress and financial report. Grantees are subject to the audit requirements in 45 CFR Parts 74 and 92 and OMB Circular A–128 or A–133. If an applicant will not be requesting indirect costs, it should anticipate in its budget

request the cost of having an audit performed at the end of the grant period.

Section 319 of Public Law 101–121, signed into law on October 23, 1989, imposes new prohibitions and requirements for disclosure and certification related to lobbying on recipients of Federal contracts, grants, cooperative agreements, and loans. It provides limited exemptions for Indian tribes and tribal organizations. Current and prospective recipients (and their subtier contractors and/or grantees) are prohibited from using appropriated funds for lobbying Congress or any Federal agency in connection with the award of a contract, grant, cooperative agreement or loan. In addition, for each award action in excess of $100,000 (or $150,000 for loans) the law requires recipients and their subtier contractors and/or subgrantees (1) to certify that they have neither used nor will use any appropriated funds for payment to lobbyists, (2) to submit a declaration setting forth whether payments to lobbyists have been or will be made out of nonappropriated funds and, if so, the name, address, payment details, and purpose of any agreements with such lobbyists whom recipients or their subtier contractors or subgrantees will pay with the *nonappropriated* funds and (3) to file quarterly up-dates about the use of lobbyists if an event occurs that materially affects the accuracy of the information submitted by way of declaration and certification. The law establishes civil penalties for noncompliance and is effective with respect to contracts, grants, cooperative agreements and loans entered into or made on or after December 23, 1989. See Attachment H for certification and disclosure forms to be submitted with the applications for this program.

Attachment I indicates the regulations which apply to all applicants/grantees under the Discretionary grants Program.

Dated: December 28, 1994.

Donald Sykes,

Director, Office of Community Services.

ATTACHEMENT A-1994 POVERTY INCOME GUIDELINES FOR ALL STATES (EXCEPT ALASKA AND HAWAII AND THE DISTRICT OF COLUMBIA

Size of family unit	Poverty guideline
1	$7,360
2	9,840
3	12,320
4	14,800
5	17,280
6	19,760
7	22,240
8	24,720

For family units with more than 8 members, ad $2,480 for each additional member.

POVERTY INCOME GUIDELINES FOR ALASKA

Size of family unit	Poverty guideline
1	$9,200
2	12,300
3	15,400
4	18,500
5	21,600
6	24,700
7	27,800
8	30,900

For family units with more than 8 members, add $3,100 for each additional member.

POVERTY INCOME GUIDELINES FOR HAWAII

Size of family unit	Poverty guideline
1	$8,470
2	11,320
3	14,170
4	17,020
5	19,870
6	22,720
7	25,570
8	28,420

For family units with more than 8 members, add $2,850 for each additional member. (The same increment applies to smaller family sizes also, as can be seen in the figures above.)

BILLING CODE 4184–01–P

ATTACHMENT B

APPLICATION FOR FEDERAL ASSISTANCE

OMB Approval No. 0348-0043

2. DATE SUBMITTED	Applicant Identifier
3. DATE RECEIVED BY STATE	State Application Identifier
4. DATE RECEIVED BY FEDERAL AGENCY	Federal Identifier

1. TYPE OF SUBMISSION:

Application	*Preapplication*
☐ Construction	☐ Construction
☐ Non-Construction	☐ Non-Construction

5. APPLICANT INFORMATION

Legal Name:	Organizational Unit:
Address *(give city, county, state, and zip code)*:	Name and telephone number of the person to be contacted on matters involving this application *(give area code)*

6. EMPLOYER IDENTIFICATION NUMBER (EIN): ☐☐ – ☐☐☐☐☐☐☐

7. TYPE OF APPLICANT: *(enter appropriate letter in box)* ☐

A. State
B. County
C. Municipal
D. Township
E. Interstate
F. Intermunicipal
G. Special District
H. Independent School Dist.
I. State Controlled Institution of Higher Learning
J. Private University
K. Indian Tribe
L. Individual
M. Profit Organization
N. Other (Specify): _____

8. TYPE OF APPLICATION:

☐ New ☐ Continuation ☐ Revision

If Revision, enter appropriate letter(s) in box(es): ☐ ☐

A. Increase Award B. Decrease Award C. Increase Duration
D. Decrease Duration Other *(specify)*:

_____

9. NAME OF FEDERAL AGENCY:

10. CATALOG OF FEDERAL DOMESTIC ASSISTANCE NUMBER: ☐☐ . ☐☐☐

TITLE:

11. DESCRIPTIVE TITLE OF APPLICANT'S PROJECT:

12. AREAS AFFECTED BY PROJECT *(cities, counties, states, etc.)*:

13. PROPOSED PROJECT:

Start Date	Ending Date

14. CONGRESSIONAL DISTRICTS OF:

a. Applicant	b. Project

15. ESTIMATED FUNDING:

a. Federal	$ .00
b. Applicant	$ .00
c. State	$ .00
d. Local	$ .00
e. Other	$ .00
f. Program Income	$ .00
g. TOTAL	$ .00

16. IS APPLICATION SUBJECT TO REVIEW BY STATE EXECUTIVE ORDER 12372 PROCESS?

a. YES. THIS PREAPPLICATION/APPLICATION WAS MADE AVAILABLE TO THE STATE EXECUTIVE ORDER 12372 PROCESS FOR REVIEW ON:

DATE _____

b NO. ☐ PROGRAM IS NOT COVERED BY E.O. 12372

☐ OR PROGRAM HAS NOT BEEN SELECTED BY STATE FOR REVIEW

17. IS THE APPLICANT DELINQUENT ON ANY FEDERAL DEBT?

☐ Yes If "Yes," attach an explanation. ☐ No

18. TO THE BEST OF MY KNOWLEDGE AND BELIEF, ALL DATA IN THIS APPLICATION/PREAPPLICATION ARE TRUE AND CORRECT, THE DOCUMENT HAS BEEN DULY AUTHORIZED BY THE GOVERNING BODY OF THE APPLICANT AND THE APPLICANT WILL COMPLY WITH THE ATTACHED ASSURANCES IF THE ASSISTANCE IS AWARDED

a. Typed Name of Authorized Representative	b. Title	c. Telephone number
d. Signature of Authorized Representative		e. Date Signed

Previous Editions Not Usable

Standard Form 424 (REV 4-88)
Prescribed by OMB Circular A-102

Authorized for Local Reproduction

BILLING CODE 4184–01–C

Instructions for the SF 424

This is a standard form used by applicants as a required facesheet for preapplications and applications submitted for Federal assistance. It will be used by Federal agencies to obtain applicant certification that States which have established a review and comment procedure in response to Executive Order 12372 and have selected the program to be include din their process, have been given an opportunity to review the applicant's submission.

Item and Entry

1. Self-explanatory.

2. Date application submitted to Federal agency (or State if applicable) & applicant's control number (if applicable).

3. State use only (if applicable).

4. If this application is to continue or revise an existing award, enter present Federal identifier number. If for a new project, leave blank.

5. Legal name of applicant, name of primary organizational unit which will undertake the assistance activity, complete address of the applicant, and name and telephone numer of the person to contact on matters related to this application.

6. Enter Employer Identification Number (EIN) as assigned by the Internal Revenue Service.

7. Enter the appropriate letter in the space provided.

8. Check appropriate box and enter appropriate letter(s) in the space(s) provided:

—''New'' means a new assistance award.

—''Continuation'' means an extension for an additional funding/budget period for a project with a projected completion date.

—''Revision'' means any change in the Federal Government's financial obligation or contingent liability from an existing obligation.

9. Name of Federal agency from which assistance is being requested with this application.

10. Use the Catalog of Federal Domestic Assistance number and title of the program under which assistance is requested.

11. Enter a brief descriptive title of the project. If more than one program is involved, you should append an explanation on a separate sheet. If appropriate (e.g., construction or real property projects), attach a map showing project location. For preapplications, use a separate sheet to provide a summary description of this project.

12. List only the largest political entities affected (e.g., State, counties, cities).

13. Self-explanatory.

14. List the applicant's Congressional District and any District(s) affected by the program or project.

15. Amount requested or to be contributed during the firs funding/budget period by each contributor. Value of in-kind contributions should be included on appropriate lines as applicable. If the action will result in a dollar change to an existing award, indicate *only* the amount of the change. For decreases, enclose the amounts in parentheses. If both basic and supplemental amounts are included, show breakdown on a attached sheet. For multiple program funding, use totals and show breakdown using same categories as item 15.

16. Applicants should contact the State Single Point of Contact (SPOC) for Federal Executive Order 12372 to determine whether the application is subject to the State intergovernmental review process.

17. This question applies to the applicant organization, not the person who signs as the authorized representative. Categories of debt include delinquent audit disallowances, loans and taxes.

18. To be signed by the authorized representative of the applicant. A copy of the governing body's authorization for you to sign this application as official representative must be on file in the applicant's office. (Certain Federal agencies may require that this authorization be submitted as part of the application.)

BILLING CODE 4184–01–P

ATTACHMENT C

OMB Approval No. 0348-0044

BUDGET INFORMATION — Non-Construction Programs

SECTION A – BUDGET SUMMARY

Grant Program Function or Activity (a)	Catalog of Federal Domestic Assistance Number (b)	Estimated Unobligated Funds		New or Revised Budget		
		Federal (c)	Non-Federal (d)	Federal (e)	Non-Federal (f)	Total (g)
1.		$	$	$	$	$
2.						
3.						
4.						
5. TOTALS		$	$	$	$	$

SECTION B – BUDGET CATEGORIES

6 Object Class Categories	GRANT PROGRAM, FUNCTION OR ACTIVITY				Total (5)
	(1)	(2)	(3)	(4)	
a. Personnel	$	$	$	$	$
b. Fringe Benefits					
c. Travel					
d. Equipment					
e. Supplies					
f. Contractual					
g. Construction					
h. Other					
i. Total Direct Charges (sum of 6a - 6h)					
j. Indirect Charges					
k. TOTALS (sum of 6i and 6j)	$	$	$	$	$
7. Program Income	$	$	$	$	$

Authorized for Local Reproduction

Standard Form 424A (4-88)
Prescribed by OMB Circular A-102

SECTION C - NON-FEDERAL RESOURCES

(a) Grant Program	(b) Applicant	(c) State	(d) Other Sources	(e) TOTALS
8.	$	$	$	$
9.				
10.				
11.				
12. TOTALS (sum of lines 8 and 11)	$	$	$	$

SECTION D - FORECASTED CASH NEEDS

	Total for 1st Year	1st Quarter	2nd Quarter	3rd Quarter	4th Quarter
13. Federal	$	$	$	$	$
14. NonFederal					
15. TOTAL (sum of lines 13 and 14)	$	$	$	$	$

SECTION E - BUDGET ESTIMATES OF FEDERAL FUNDS NEEDED FOR BALANCE OF THE PROJECT

(a) Grant Program	FUTURE FUNDING PERIODS (Years)			
	(b) First	(c) Second	(d) Third	(e) Fourth
16.	$	$	$	$
17.				
18.				
19.				
20. TOTALS (sum of lines 16 -19)	$	$	$	$

SECTION F - OTHER BUDGET INFORMATION

(Attach additional Sheets if Necessary)

21. Direct Charges:	22. Indirect Charges:

23. Remarks

SF 424A (4-88) Page 2
Prescribed by OMB Circular A-102

Authorized for Local Reproduction

BILLING CODE 4184-01-C

INSTRUCTIONS FOR THE SF–424A

General Instructions

This form is designed so that application can be made for funds from one or more grant programs. In preparing the budget, adhere to any existing Federal grantor agency guidelines which prescribe how and whether budgeted amounts should be separately shown for different functions or activities within the program. For some programs, grantor agencies may require budgets to be separately shown by function or activity. For other programs, grantor agencies may require a breakdown by function or activity. Sections A, B, C, and D should include budget estimates for the whole project except when applying for assistance which requires Federal authorization in annual or other funding period increments. In the latter case, Sections A, B, C, and D should provide the budget for the first budget period (usually a year) and Section E should present the need for Federal assistance in the subsequent budget periods. All applications should contain a breakdown by the object class categories shown in Lines a–k of Section B.

Section A. Budget Summary Lines 1–4, Columns (a) and (b)

For applications pertaining to a *single* Federal grant program (Federal Domestic Assistance Catalog number) and *not requiring* a functional or activity breakdown, enter on Line 1 under Column (a) the catalog program title and the catalog number in Column (b).

For applications pertaining to a *single* program *requiring* budget amounts by multiple functions or activities, enter the name of each activity or function on each line in Column (a), and enter the catalog number in Column (b). For applications pertaining to multiple programs where none of the programs require a breakdown by function or activity, enter the catalog program title on each line in *Column* (a) and the respective catalog number on each line in Column (b).

For applications pertaining to *multiple* programs where one or more programs *require* a breakdown by function or activity, prepare a separate sheet for each program requiring the breakdown. Additional sheets should be used when one form does not provide adequate space for all breakdown of data required. However, when more than one sheet is used, the first page should provide the summary totals by programs.

Lines 1–4, Columns (c) through (g.)

For new applications, leave Columns (c) and (d) blank. For each line entry in Columns (a) and (b), enter in Columns (e), (f), and (g) the appropriate amounts of funds needed to support the project for the first funding period (usually a year).

Lines 1–4, Columns (c) through (g).) (continued)

Fr continuing grant program applications, submit these forms before the end of each funding period as required by the grantor agency. Enter in Columns (c) and (d) the estimated amounts of funds which will remain unobligated at the end of the grant funding period only if the Federal grantor agency instructions provide for this. Otherwise, leave these columns blank. Enter in columns (e) and (f) the amounts of funds needed for the upcoming period. The amount(s) in Column (g) should be the sum of amounts in Columns (e) and (f).

For supplemental grants and changes to existing grants, do not use Columns (c) and (d). Enter in Column (e) the amount of the increase or decrease of Federal funds and enter in Column (f) the amount of the increase or decrease of non-Federal funds. In Column (g) enter the new total budgeted amount (Federal and non-Federal) which includes the total previous authorized budgeted amounts plus or minus, as appropriate, the amounts shown in Columns (e) and (f). The amount(s) in Column (g) should not equal the sum of amounts in Columns (e) and (f).

Line 5—Show the totals for all columns used.

Section B Budget Categories

In the column headings (1) through (4), enter the titles of the same programs, functions, and activities shown on Line 1–4, Column (a), Section A. When additional sheets are prepared for Section A, provide similar column headings on each sheet. For each program, function or activity, fill in the total requirements for funds (both Federal and non-Federal) by object class categories.

Lines 6a–i—Show the totals of Lines 6a to 6h in each column.

Line 6j—Show the amount of indirect cost.

Line 6k—Enter the total of amounts on Lines 6i and 6j. For all applications for new grants and continuation grants the total amount in column (5), Line 6k, should be the same as the total amount shown in Section A, Column (g), Line 5. For supplemental grants and changes to grants, the total amount of the increase or decrease as shown in Columns (1)–(4), Line 6k should be the same as the sum of the amounts in Section A, Columns (e) and (f) on Line 5.

Line 7—Enter the estimated amount of income, if any, expected to be generated from this project. Do not add or subtract this amount from the total project amount. Show under the program narrative statement the nature and source of income. The estimated amount of program income may be considered by the federal grantor agency in determining the total amount of the grant.

Section C. Non-Federal-Resources

Lines 8–11—Enter amounts of non-Federal resources that will be used on the grant. If in-kind contributions are included, provide a brief explanation on a separate sheet.

Column (a)—Enter the program titles identical to Column (a), Section A. A breakdown by function or activity is not necessary.

Column (b)—Enter the contribution to be made by the applicant.

Column (c)—Enter the amount of the State's cash and in-kind contribution if the applicant is not a State or State agency. Applicants which are a State or State agencies should leave this column blank.

Column (d)—Enter the amount of cash and in-kind contributions to be made from all other sources.

Column (e)—Enter totals of Columns (b), (c), and (d).

Line 12—Enter the total for each of Columns (b)–(e). The amount in Column (e) should be equal to the amount on Line 5, Column (f), Section A.

Section D. Forecasted Cash Needs

Line 13—Enter the amount of cash needed by quarter from the grantor agency during the first year.

Line 14—Enter the amount of cash from all other sources needed by quarter during the first year.

Line 15—Enter the totals of amounts on Lines 13 and 14.

Section E. Budget Estimates of Federal Funds Needed for Balance of the Project

Lines 16–19—Enter in Column (a) the same grant program titles shown Column (a), Section A. A breakdown by function or activity is not necessary. For new applications and continuation grant applications, enter in the proper columns amounts of Federal funds which will be needed to complete the program or project over the succeeding funding periods (usually in years). This section need not be completed for revisions (amendments, changes, or supplements) to funds for the current year of existing grants.

If more than four lines are needed to list the program titles, submit additional schedules as necessary.

Line 20—Enter the total for each of the Columns (b)–(e). When additional schedules are prepared for this Section, annotate accordingly and show the overall totals on this line.

Section F. Other Budget Information

Line 21—Use this space to explain amounts for individual direct object-class cost categories that may appear to be out of the ordinary or to explain the details as required by the Federal grantor agency.

Line 22—Enter the type of indirect rate (provisional, predetermined, final or fixed) that will be in effect during the funding period, the estimated amount of the base to which the rate is applied, and the total indirect expense.

Line 23—Provide any other explanations or comments deemed necessary.

ASSURANCES—NON-CONSTRUCTION PROGRAMS

Note: Certain of these assurances may not be applicable to your project or program. If you have questions, please contact the awarding agency. Further, certain Federal awarding agencies may require applicants to certify to additional assurances. If such is the case, you will be notified.

As the duly authorized representative of the applicant I certify that the applicant:

1. Has the legal authority to apply for Federal assistance, and the institutional, managerial and financial capability (including funds sufficient to pay the non-Federal share of project costs) to ensure proper planning, management and completion of the project described in this application.

2. Will give the awarding agency, the Comptroller General of the United States, and if appropriate, the State, through any authorized representative, access to and the

right to examine all records, books, papers, or documents related to the award; and will establish a proper accounting system in accordance with generally accepted accounting standards or agency directives.

3. Will establish safeguards to prohibit employees from using their positions for a purpose that constitutes or presents the appearance of personal or organizational conflict of interest, or personal gain.

4. Will initiate and complete the work within the applicable time frame after receipt of approval of the awarding agency.

5. Will comply with the Intergovernmental Personnel Act of 1970 (42 U.S.C. §§ 4728–4763) relating to prescribed standards for merit systems for programs funded under one of the nineteen statutes or regulations specified in Appendix A of OPM's Standards for a Merit System of Personnel Administration (5 C.F.R. 900, Subpart F).

6. Will comply with all Federal statutes relating to nondiscrimination. These include but are not limited to: (a) Title VI of the Civil Rights Act of 1964 (P.L. 88–352) which prohibits discrimination on the basis of race, color or national origin; (b) Title IX of the Education Amendments of 1972, as amended (20 U.S.C. §§ 1681–1683, and 1685–1686), which prohibits discrimination on the basis of sex; (c) Section 504 of the Rehabilitation Act of 1973, as amended (29 U.S.C. § 794), which prohibits discrimination on the basis of handicaps; (d) the Age Discrimination Act of 1975, as amended (42 U.S.C. §§ 6101–6107), which prohibits discrimination on the basis of age; (e) the Drug Abuse Office and Treatment Act of 1972 (P.L. 92–255), as amended, relating to nondiscrimination on the basis of drug abuse; (f) the Comprehensive Alcohol Abuse and Alcoholism Prevention, Treatment and Rehabilitation Act of 1970 (P.L. 91–616), as amended, relating to nondiscrimination on the basis of alcohol abuse or alcoholism; (g) §§ 523 and 527 of the Public Health Service Act of 1912 (42 U.S.C. 290 dd–3 and 290 ee–3), as amended, relating to confidentiality of alcohol and drug abuse patient records; (h) Title VIII of the Civil Rights Act of 1968 (42 U.S.C. § 3601 et seq.), as amended, relating to nondiscrimination in the sale, rental or financing of housing; (i) any other nondiscrimination provisions in the specific statute(s) under which application for Federal assistance is being made; and (j) the requirements of any other nondiscrimination statute(s) which may apply to the application.

7. Will comply, or has already complied, with the requirements of Titles II and III of the Uniform Relocation Assistance and Real Property Acquisition Policies Act of 1970 (P.L. 91–646) which provide for fair and equitable treatment of persons displaced or whose property is acquired as a result of Federal or federally assisted programs. These requirements apply to all interests in real property acquired for project purposes regardless of Federal participation in purchases.

8. Will comply with the provisions of the Hatch Act (5 U.S.C. §§ 1501–1508 and 7324–7328) which limit the political activities of employees whose principal employment activities are funded in whole or in part with Federal funds.

9. Will comply, as applicable, with the provisions of the Davis-Bacon Act (40 U.S.C. §§ 276a to 276a–7), the Copeland Act (40 U.S.C. § 276c and 18 U.S.C. §§ 874), and the Contract Work Hours and Safety Standards Act (40 U.S.C. §§ 327–333), regarding labor standards for federally assisted construction subagreements.

10. Will comply, if applicable, with flood insurance purchase requirements of Section 102(a) of the Flood Disaster Protection Act of 1973 (P.L. 93–234) which requires recipients in a special flood hazard area to participate in the program and to purchase flood insurance if the total cost of insurable construction and acquisition is $10,000 or more.

11. Will comply with environmental standards which may be prescribed pursuant to the following: (a) institution of environmental quality control measures under the National Environmental Policy Act of 1969 (P.L. 91–190) and Executive Order (EO) 11514; (b) notification of violating facilities pursuant to Eo 11738; (c) protection of wetlands pursuant to EO 11990; (d) evaluation of flood hazards in floodplains in accordance with EO 11988; (e) assurance of project consistency with the approved State management program developed under the Coastal Zone Management Act of 1972 (16 U.S.C. §§ 1451 et seq.); (f) conformity of Federal actions to State (Clear Air) Implementation Plans under Section 176(c) of the Clear Air Act of 1955, as amended (42 U.S.C. § 7401 et seq.); (g) protection of underground sources of drinking water under the Safe Drinking Water Act of 1974, as amended, (P.L. 93–523); and (h) protection of endangered species under the Endangered Species Act of 1973, as amended, (P.L. 93–205).

12. Will comply with the Wild and Scenic Rivers Act of 1968 (16 U.S.C. §§ 1271 et seq.) related to protecting components or potential components of the national wild and scenic rivers system.

13. Will assist the awarding agency in assuring compliance with Section 106 of the National Historic Preservation Act of 1966, as amended (16 U.S.C. 470), EO 11593 (identification and protection of historic properties), and the Archaeological and Historic Preservation Act of 1974 (16 U.S.C. 469a–1 et seq.).

14. Will comply with P.L. 93–348 regarding the protection of human subjects involved in research, development, and related activities supported by this award of assistance.

15. Will comply with the Laboratory Animal Welfare Act of 1966 (P.L. 89–544, as amended, 7 U.S.C. 2131 et seq.) pertaining to the care, handling, and treatment of warm blooded animals held for research, teaching, or other activities supported by this award of assistance.

16. Will comply with the Lead-Based Paint Poisoning Prevention Act (42 U.S.C. §§ 4801 et seq.) which prohibits the use of lead based paint in construction or rehabilitation of residence structures.

17. Will cause to be performed the required financial and compliance audits in accordance with the Single Audit Act of 1984.

18. Will comply with all applicable requirements of all other Federal laws, executive orders, regulations and policies governing this program.

_____

Signature of Authorized Certifying Official

_____

Applicant Organization

_____

Title

_____

Date Submitted

BILLING CODE 4184–01–P

ATTACHMENT E

U.S. Department of Health and Human Services
Certification Regarding Drug-Free Workplace Requirements
Grantees Other Than Individuals

By signing and/or submitting this application or grant agreement, the grantee is providing the certification set out below.

This certification is required by regulations implementing the Drug-Free Workplace Act of 1988, 45 CFR Part 76, Subpart F. The regulations, published in the May 25, 1990 Federal Register, require certification by grantees that they will maintain a drug-free workplace. The certification set out below is a material representation of fact upon which reliance will be placed when the Department of Health and Human Services (HHS) determines to award the grant. If it is later determined that the grantee knowingly rendered a false certification, or otherwise violates the requirements of the Drug-Free Workplace Act, HHS, in addition to any other remedies available to the Federal Government, may taken action authorized under the Drug-Free Workplace Act. False certification or violation of the certification shall be grounds for suspension of payments, suspension or termination of grants, or governmentwide suspension or debarment.

Workplaces under grants, for grantees other than individuals, need not be identified on the certification. If known, they may be identified in the grant application. If the grantee does not identify the workplaces at the time of application, or upon award, if there is no application, the grantee must keep the identity of the workplace(s) on file in its office and make the information available for Federal inspection. Failure to identify all known workplaces constitutes a violation of the grantee's drug-free workplace requirements.

Workplace identifications must include the actual address of buildings (or parts of buildings) or other sites where work under the grant takes place. Categorical descriptions may be used (e.g., all vehicles of a mass transit authority or State highway department while in operation, State employees in each local unemployment office, performers in concert halls or radio studios.)

If the workplace identified to HHS changes during the performance of the grant, the grantee shall inform the agency of the change(s), if it previously identified the workplaces in question (see above).

Definitions of terms in the Nonprocurement Suspension and Debarment common rule and Drug-Free Workplace common rule apply to this certification. Grantees' attention is called, in particular, to the following definitions from these rules:

"Controlled substance" means a controlled substance in Schedules I through V of the Controlled Substances Act (21 USC 812) and as further defined by regulation (21 CFR 1308.11 through 1308.15).

"Conviction" means a finding of guilt (including a plea of nolo contendere) or imposition of sentence, or both, by any judicial body charged with the responsibility to determine violations of the Federal or State criminal drug statutes;

"Criminal drug statute" means a Federal or non-Federal criminal statute involving the manufacture, distribution, dispensing, use, or possession of any controlled substance;

"Employee" means the employee of a grantee directly engaged in the performance of work under a grant, including: (i) All "direct charge" employees; (ii) all "indirect charge" employees unless their impact or involvement is insignificant to the performance of the grant; and, (iii) temporary personnel and consultants who are directly engaged in the performance of work under the grant and who are on the grantee's payroll. This definition does not include workers not on the payroll of the grantee (e.g., volunteers, even if used to meet a matching requirement; consultants or independent contractors not on the grantee's payroll; or employees of subrecipients or subcontractors in covered workplaces).

The grantee certifies that it will or will continue to provide a drug-free workplace by:

(a) Publishing a statement notifying employees that the unlawful manufacture, distribution, dispensing, possession or use of a controlled substance is prohibited in the grantee's workplace and specifying the actions that will be taken against employees for violation of such prohibition;

(b) Establishing an ongoing drug-free awareness program to inform employees about:

(1) The dangers of drug abuse in the workplace; (2) The grantee's policy of maintaining a drug-free workplace; (3) Any available drug counseling, rehabilitation, and employee assistance programs; and, (4) The penalties that may be imposed upon employees for drug abuse violations occurring in the workplace;

(c) Making it a requirement that each employee to be engaged in the performance of the grant be given a copy of the statement required by paragraph (a);

(d) Notifying the employee in the statement required by paragraph (a) that, as a condition of employment under the grant, the employee will:

(1) Abide by the terms of the statement; and, (2) Notify the employer in writing of his or her conviction for a violation of a criminal drug statute occurring in the workplace no later than five calendar days after such conviction;

(e) Notifying the agency in writing, within ten calendar days after receiving notice under subparagraph (d)(2) from an employee or otherwise receiving actual notice of such conviction. Employers of convicted employees must provide notice, including position title, to every grant officer or other designee on whose grant activity the convicted employee was working, unless the Federal agency has designated a central point for the receipt of such notices. Notice shall include the identification number(s) of each affected grant;

(f) Taking one of the following actions, within 30 calendar days of receiving notice under subparagraph (d)(2), with respect to any employee who is so convicted:

(1) Taking appropriate personnel action against such an employee, up to and including termination, consistent with the requirements of the Rehabilitation Act of 1973, as amended; or, (2) Requiring such employee to participate satisfactorily in a drug abuse assistance or rehabilitation program approved for such purposes by a Federal, State, or local health, law enforcement, or other appropriate agency;

(g) Making a good faith effort to continue to maintain a drug-free workplace through implementation of paragraphs (a), (b), (c), (d), (e) and (f).

The grantee may insert in the space provided below the site(s) for the performance of work done in connection with the specific grant (use attachments, if needed):

Place of Performance (Street address, City, County, State, ZIP Code)_____

Check ___ *if there are workplaces on file that are not identified here.*

Sections 76.630(c) and (d)(2) and 76.635(a)(1) and (b) provide that a Federal agency may designate a central receipt point for STATE-WIDE AND STATE AGENCY-WIDE certifications, and for notification of criminal drug convictions. For the Department of Health and Human Services, the central receipt point is: Division of Grants Management and Oversight, Office of Management and Acquisition, Department of Health and Human Services, Room 517-D, 200 Independence Avenue, S.W., Washington, D.C. 20201.

DGMO Form#2 Revised May 1990

BILLING CODE 4184–01–C

ATTACHMENT F

Certification Regarding Debarment, Suspension, and Other Responsibility Matters—Primary Covered Transactions

By signing and submitting this proposal, the applicant, defined as the primary participant in accordance with 45 CFR Part 76, certifies to the best of its knowledge and believe that it and its principals:

(a) Are not presently debarred, suspended, proposed for debarment, declared ineligible, or voluntarily excluded from covered transactions by any Federal Department or agency;

(b) Have not within a 3-year period preceding this proposal been convicted of or had a civil judgment rendered against them for commission of fraud or a criminal offense in connection with obtaining, attempting to obtain, or performing a public (Federal, State, or local) transaction or contract under a public transaction; violation of Federal or State antitrust statutes or commission of embezzlement, theft, forgery, bribery, falsification or destruction of records, making false statements, or receiving stolen property;

(c) Are not presently indicted or otherwise criminally or civilly charged by a governmental entity (Federal, State or local) with commission of any of the offenses enumerated in paragraph (1)(b) of this certification; and

(d) Have not within a 3-year period preceding this application/proposal had one or more public transactions (Federal, State, or local) terminated for cause or default.

The inability of a person to provide the certification required above will not necessarily result in denial of participation in this covered transaction. If necessary, the prospective participant shall submit an explanation of why it cannot provide the certification. The certification or explanation will be considered in connection with the Department of Health and Human Services (HHS) determination whether to enter into this transaction. However, failure of the prospective primary participant to furnish a certification or an explanation shall disqualify such person from participation in this transaction.

The prospective primary participant agrees that by submitting this proposal, it will include the clause entitled ''Certification Regarding Debarment, Suspension, Ineligibility, and Voluntary Exclusion—Lower Tier Covered Transaction.'' provided below without modification in all lower tier covered transactions and in all solicitations for lower tier covered transactions.

Certification Regarding Debarment, Suspension, Ineligibility and Voluntary Exclusion—Lower Tier Covered Transactions (To Be Supplied to Lower Tier Participants)

By signing and submitting this lower tier proposal, the prospective lower tier participant, as defined in 45 CFR Part 76, certifies to the best of its knowledge and belief that it and its principals:

(a) are not presently debarred, suspended, proposed for debarment, declared ineligible, or voluntarily excluded from participation in this transaction by any federal department or agency.

(b) where the prospective lower tier participant is unable to certify to any of the above, such prospective participant shall attach an explanation to this proposal.

The prospective lower tier participant further agrees by submitting this proposal that it will include this clause entitled ''Certification Regarding Debarment, Suspension, Ineligibility, and Voluntary Exclusion—Lower Tier Covered Transactions.'' without modification in all lower tier covered transactions and in all solicitations for lower tier covered transactions.

ATTACHMENT G

Executive Order 12372—State Single Points of Contact

Mrs. Janice Dunn

Arizona

Attn: Arizona State Clearinghouse
3800 N. Central Avenue, 14th Floor
Phoenix, Arizona 85012
Telephone (602) 280–1315

Arkansas

Tracie L. Copeland, Manager
State Clearinghouse
Office of Intergovernmental Services
Department of Finance and Administration
P.O. Box 3278
Little Rock, Arkansas 72203
Telephone (501) 682–1074

California

Glenn Stober, Grants Coordinator
Office of Planning and Research
1400 Tenth Street
Sacramento, California 95814
Telephone (916) 323–7480

Delaware

Ms. Francine Booth
State Single Point of Contact
Executive Department
Thomas Collins Building
Dover, Delaware 19903
Telephone (302) 736–3326

District of Columbia

Rodney T. Hallman
State Single Point of Contact
Office of Grants Management and Development
717 14th Street, NW.
Suite 500
Washington, DC 20005
Telephone (202) 727–6551

Florida

Florida State Clearinghouse
Intergovernmental Affairs Policy Unit
Executive Office of the Governor
Office of Planning and Budgeting
The Capitol
Tallahassee, Florida 32399–0001
Telephone (904) 488–8441

Georgia

Mr. Charles H. Badger, Administrator
Georgia State Clearinghouse
254 Washington Street, SW.
Atlanta, Georgia 30334
Telephone (404) 656–3855

Illinois

Steve Klokkenga
State Single Point of Contact
Office of the Governor
107 Stratton Building
Springfield, Illinois 62706
Tehephone (217) 782–1671

Indiana

Jean S. Blackwell
Budget Director, State Budget Agency
212 State House
Indianapolis, Indiana 46204
Telephone (317) 232–5610

Iowa

Mr. Steven R. McCann
Division of Community Progress
Iowa Department of Economic Development
200 East Grand Avenue
Des Moines, Iowa 50309
Telephone (515) 281–3725

Kentucky

Ronald W. Cook
Office of the Governor
Department of Local Government
1024 Capitol Center Drive
Frankfort, Kentucky 40601
Telephone (502) 564–2382

Maine

Ms. Joyce Benson
State Planning Office
State House Station #38
Augusta, Maine 04333
Telephone (207) 289–3261

Maryland

Ms. Mary Abrams
Chief, Maryland State Clearinghouse
Department of State Planning
301 West Preston Street
Baltimore, Maryland 21201–2365

Telephone (301) 225–4490

Massachusetts

Karen Arone
State Clearinghouse
Executive Office of Communities and Development
100 Cambridge Street, Room 1803
Boston, Massachusetts 02202
Telephone (617) 727–7001

Michigan

Richard S. Pastula, Director
Michigan Department of Commerce
Lansing, Michigan 48909
Telephone (517) 373–7356

Mississippi

Ms. Cathy Mallette, Clearinghouse Officer
Office of Federal Grant Management and Reporting
301 West Pearl Street
Jackson, Mississippi 39203
Telephone (601) 960–2174

Missouri

Ms. Lois Pohl
Federal Assistance Clearinghouse
Office of Administration
P.O. Box 809
Room 430, Truman Building
Jefferson City, Missouri 65102
Telephone (314) 751–4834

Nevada

Department of Administration
State Clearinghouse, Capitol Complex
Carson City, Nevada 89710
Telephone (702) 687–4065
Attention: Ron Sparks, Clearinghouse Coordinator

New Hampshire

Mr. Jeffrey H. Taylor, Director
New Hampshire Office of State Planning
Attn: Intergovernmental Review Process/James E. Bieber
2½ Beacon Street
Concord, New Hampshire 03301
Telephone (603) 271–2155

New Jersey

Gregory W. Adkins, Acting Director
Division of Community Resources
N.J. Department of Community Affairs
Trenton, New Jersey 08625–0803
Telephone (609) 292–6613
Please direct correspondence and questions to: Andrew J. Jaskolka, State Review Process
Division of Community Resources
CN 814, Room 609
Trenton, New Jersey 08625–0803
Telephone (609) 292–9025

New Mexico

George Elliott, Deputy Director
State Budget Division
Room 190, Bataan Memorial Building
Santa Fe, New Mexico 87503
Telephone (505) 827–3640
FAX (505) 827–3006

New York

New York State Clearinghouse
Division of the Budget
State Capitol
Albany, New York 12224
Telephone (518) 474–1605

North Carolina

Mrs. Chrys Baggett, Director
Office of the Secretary of Admin.
N.C. State Clearinghouse
116 W. Jones Street
Telephone (919) 733–7232

North Dakota

N.D. Single Point of Contact
Office of Intergovernmental Assistance
Office of Management and Budget
600 East Boulevard Avenue
Bismarck, North Dakota 58505–0170
Telephone (701) 224–2094

Ohio

Larry Weaver, State Single Point of Contact
State/Federal Funds Coordinator
State Clearinghouse, Office of Budget and Management
30 East Broad Street, 34th Floor
Columbus, Ohio 43266–0411
Telephone (614) 466–0698

Rhode Island

Mr. Daniel W. Varin, Associate Director
Statewide Planning Program
Department of Administration
Division of Planning
265 Melrose Street
Providence, Rhode Island 02907
Telephone (401) 277–2656
Please direct correspondence and questions to: Review Coordinator, Office of Strategic Planning

South Carolina

Omeagia Burgess
State Single Point of Contact
Grant Services
Office of the Governor
1205 Pendleton Street, Room 477
Columbia, South Carolina 29201
Telephone (803) 734–0494

Tennessee

Mr. Charles Brown
State Single Point of Contact
State Planning Office
500 Charlotte Avenue
309 John Sevier Building
Nashville, Tennessee 37219
Telephone (615) 741–1676

Texas

Mr. Thomas Adams
Governor's Office of Budget and Planning
P.O. Box 12428
Austin, Texas 78711
Telephone (512) 463–1778

Utah

Utah State Clearinghouse
Office of Planning and Budget
Attn: Carolyn Wright
Room 116 State Capitol
Salt Lake City, Utah 84114
Telephone (801) 538–1535

Vermont

Mr. Bernard D. Johnson, Assistant Director
Office of Policy Research & Coordination
Pavilion Office Building
109 State Street
Montpelier, Vermont 05602
Telephone (802) 828–3326

West Virginia

Mr. Fred Cutlip, Director
Community Development Division
West Virginia Development Office
Building #6, Room 553
Charleston, West Virginia 25305
Telephone (304) 348–4010

Wisconsin

Mr. William C. Carey
Federal/State Relations
Wisconsin Department of Administration
101 South Webster Street
P.O. Box 7864
Madison, Wisconsin 53707
Telephone (608) 266–0267

Wyoming

Sheryl Jeffries
State Single Point of Contact
Herschler Building
4th Floor, East Wing
Cheyenne, Wyoming 82002
Telephone (307) 777–7574

Guam

Mr. Michael J. Reidy, Director
Bureau of Budget and Management Research
Office of the Governor
P.O. Box 2950
Agana, Guam 96910
Telephone (671) 472–2285

Northern Mariana Islands

State Single Point of Contact
Planning and Budget Office
Office of the Governor
Saipan, CM
Northern Mariana Islands 96950

Puerto Rico

Norma Burgos/Jose H. Caro
Chairman/Director

Puerto Rico Planning Board
Minillas Government Center
P.O. Box 41119
San Juan, Puerto Rico 00940–9985
Telephone (809) 727–4444

Virgin Islands

Jose L. George, Director
Office of Management and Budget
41 Norregade Emancipation Garden Station
Second Floor
Saint Thomas, Virgin Islands 00802
Please direct correspondence to: Linda Clarke, telephone (809) 774–0750

Certification Regarding Lobbying

Certification for Contracts, Grants, Loans, and Cooperative Agreements

The undersigned certifies, to the best of his or her knowledge and belief, that:

(1) No Federal appropriated funds have been paid or will be paid, by or on behalf of the undersigned, to any person for influencing or attempting to influence an officer or employee of any agency, a Member of Congress, an officer or employee of Congress, or an employee of a Member of Congress in connection with the awarding of any Federal contract, the making of any Federal grant, the making of any Federal loan, the entering into of any cooperative agreement, and the extension, continuation, renewal, amendment, or modification of any Federal contract, grant, loan, or cooperative agreement.

(2) If any funds other than Federal appropriated funds have been paid or will be paid to any person for influencing or attempting to influence an officer or employee of any agency, a Member of Congress, an officer or employee of Congress, or an employee of a Member of Congress in connection with this Federal contract, grant, loan or cooperative agreement, the undersigned shall complete and submit Standard Form-LLL, ''Disclosure Form to Report Lobbying,'' in accordance with its instructions.

(3) The undersigned shall require that the language of this certification be included in the award documents for all subawards at all tiers (including subcontracts, subgrants, and contracts under grants, loans, and cooperative agreements) and that all subrecipients shall certify and disclose accordingly.

This certification is a material representation of fact upon which reliance was placed when this transaction was made or entered into. Submission of this certification is a prerequisite for making or entering into this transaction imposed by section 1352, title 31, U.S. Code. Any person who fails to file the required certification shall be subject to a civil penalty of not less than $10,000 and not more than $100,000 for each such failure.

State for Loan Guarantee and Loan Insurance

The undersigned states, to the best of his or her knowledge and belief, that:

If any funds have been paid or will be paid to any person for influencing or attempting to influence an officer or employee of any agency, a Member of Congress, an officer or employee of Congress, or an employee of a Member of Congress in connection with this commitment providing for the United States to insure or guarantee a loan, the undersigned shall complete and submit Standard Form-LLL ''Disclosure Form to Report Lobbying,'' in accordance with its instructions.

Submission of this statement is a prerequisite for making or entering into this transaction imposed by section 1352, title 31, U.S. Code. Any person who fails to file the required statement shall be subject to a civil penalty of not less than $10,000 and not more than $100,000 for each such failure.

_____
Signature

_____
Title

_____
Organization

_____
Date

ATTACHMENT J

Checklist for Use in Submitting OCS Grant Applications (Optional)

The application should contain:

1. A completed, signed SF–424, ''Application for Federal assistance''. The letter code for the priority area e.g., (UR) should be in the lower right hand corner.

2. A completed ''Budget Information—Non-Construction'' (SF–424A);

3. A signed ''Assurances—Non-Construction'' (SF–424A);

4. A Project Abstract

5. A Project Narrative beginning with a Table of Contents that describes the project in the following order:

(a) Eligibility Confirmation

(b) Analysis of Need (except for Sub-Priority 1.4)

(c) Organizational Experience and Staff Responsibilities

(d) Work Program (including Executive Summary)

6. Appendices, including relevant sections of By-Laws and/or Articles of Incorporation which confirm applicant's eligibility as a CDC; proof of non-profit status where applicable; résumés, written agreements re grants, coordination with JOBS, etc.; Single Point of Contact comments (where applicable); certification regarding anti-lobbying activities; and a disclosure of lobbying activities''.

7. A signed copy of ''Certification Regarding Anti-Lobbying Activities.''

8. A completed ''Disclosures of Lobbying Activities'', if appropriate; and

9. A self-addressed mailing label which can be affixed to a notice to acknowledge receipt of application.

The application should not exceed a total of 50 pages for applications submitted under sub-priority areas 1.1 and 1.2 and 30 pages for all applications submitted under the other sub-priority areas. It should include one original and four identical copies, printed on white 8½ by 11 inch paper only. Applications should be two holed punched at the top center and fastened with a compressor slide paper fastener or a binder clip. All pages should be numbered.

BILLING CODE 4184–01–P

DISCLOSURE OF LOBBYING ACTIVITIES

Approved by OMB
0348-0046

Complete this form to disclose lobbying activities pursuant to 31 U.S.C. 1352
(See reverse for public burden disclosure.)

1. Type of Federal Action:
☐ a. contract
b. grant
c. cooperative agreement
d. loan
e. loan guarantee
f. loan insurance

2. Status of Federal Action:
☐ a. bid/offer/application
b. initial award
c. post-award

3. Report Type:
☐ a. initial filing
b. material change
For Material Change Only:
year _____ quarter _____
date of last report _____

4. Name and Address of Reporting Entity:
☐ Prime ☐ Subawardee
Tier _____, *if known*:

Congressional District, *if known*:

5. If Reporting Entity in No. 4 is Subawardee, Enter Name and Address of Prime:

Congressional District, *if known*:

6. Federal Department/Agency:

7. Federal Program Name/Description:

CFDA Number, *if applicable*: _____

8. Federal Action Number, *if known*:

9. Award Amount, *if known*:
$

10. a. Name and Address of Lobbying Entity
(if individual, last name, first name, MI):

b. Individuals Performing Services *(including address if different from No. 10a)*
(last name, first name, MI):

(attach Continuation Sheet(s) SF-LLL-A, if necessary)

11. Amount of Payment *(check all that apply)*:
$ _____ ☐ actual ☐ planned

12. Form of Payment *(check all that apply)*:
☐ a. cash
☐ b. in-kind; specify: nature _____
value _____

13. Type of Payment *(check all that apply)*:
☐ a. retainer
☐ b. one-time fee
☐ c. commission
☐ d. contingent fee
☐ e. deferred
☐ f. other; specify: _____

14. Brief Description of Services Performed or to be Performed and Date(s) of Service, including officer(s), employee(s), or Member(s) contacted, for Payment Indicated in Item 11:

(attach Continuation Sheet(s) SF-LLL-A, if necessary)

15. Continuation Sheet(s) SF-LLL-A attached: ☐ Yes ☐ No

16. Information requested through this form is authorized by title 31 U.S.C. section 1352. This disclosure of lobbying activities is a material representation of fact upon which reliance was placed by the tier above when this transaction was made or entered into. This disclosure is required pursuant to 31 U.S.C. 1352. This information will be reported to the Congress semi-annually and will be available for public inspection. Any person who fails to file the required disclosure shall be subject to a civil penalty of not less than $10,000 and not more than $100,000 for each such failure.

Signature: _____
Print Name: _____
Title: _____
Telephone No.: _____ **Date:** _____

Federal Use Only:

Authorized for Local Reproduction
Standard Form - LLL

[FR Doc. 95–238 Filed 1–5–95; 8:45 am]
BILLING CODE 4184–01–C

Indian Health Service

List of Recipients of Indian Health Scholarships Under the Indian Health Scholarship Program.

The regulations governing Indian Health Care Improvement Act Programs (Pub. L. 94–437) provide at 42 CFR 36.334 that the Indian Health Service shall publish annually in the **Federal Register** a list of recipients of Indian Health Scholarships, including the name of each recipient, school, discipline and tribal affiliation, if applicable. These scholarships were awarded under the authority of section 104 of the Indian Health Care Improvement Act, 25 U.S.C. 1613–1613a, as amended by the Indian Health Care Amendments of 1988, Public Law 100–713.

This notice also includes a separate list of preparatory scholarship recipients funded under the authority of Section 103 of the Indian Health Care Improvement Act, as amended.

The following is a list of Indian Health Scholarship Recipients for Fiscal Year 1994:

Professions Section 104

Abe, Winifred Vivian, University of Phoenix, Nurse, Navajo
Adams, Michelle Dette, Miles Community College, Nurse, Assiniboine & Sioux
Adcock, Keith James, University of New Mexico, Pharmacy, Navajo
Aird, Stephanie Ann, University of New Mexico, Health Education, Navajo
Albers, Leslie Ann, South Dakota State University, Nurse, Oglala Sioux
Albert, Corrina Dynalle, New Mexico State University, Medical Technology, Laguna Pueblo
Allard-Laroque, Stephanie Marie, University of North Dakota, Clinical Psychology, Turtle Mountain Chippewa
Allen, Alana Dawn, Langston University, Nurse, Cherokee
Anderson, Annette Irene, University of Alaska-Anchorage, Computer Science, Alaskan
Anderson, Lori Dawn, Murray State College, Nurse, Cherokee
Anoatubby, Christopher Michael, University of Oklahoma, Pharmacy, Chickasaw
Anoatubby, Theresa Rose, University of Oklahoma, Physical Therapy, Chickasaw
Arkansas, Carmen, University of Utah, Medicine, Eastern Cherokee
Armijo, Darlene Jean, Albuquerque Technical Vocational Institute, Nurse, Jemez Pueblo
Arviso, Angela Mary, Arizona State University, Engineer, Navajo
Arviso, Anthony Lionel, University of New Mexico, Physical Therapy, Navajo
Aspaas, Anthony Hans, University of New Mexico, Nurse, Navajo
Atkins, Pamela Jane, University of New Mexico, Nurse, Navajo
Autaubo, Diana Lynn, University of Oklahoma, Health Education, Seminole
Azure, Joette Danielle, University of North Dakota, Nurse, Turtle Mountain Chippewa
Bahe, Velma Ann, University of New Mexico, Nurse, Navajo
Baker, Biron Dale, University of North Dakota, Medicine, Three Affiliated-Fort Berthold
Ball, Christi Ann, Wichita State University, Dental Hygiene, Seneca
Bancroft, Trina Ann, University of Colorado, Medicine, Ute Mountain
Banks, Joey M., Indiana University, Medicine, Cherokee
Barnoskie, Terrill Ray, Bacone College, Radiology, Cherokee
Bartmess, Valene Nancy, Oklahoma City University, Nurse, Creek
Bartosovsky, Teri Kaye, University of Oklahoma, Nurse, Comanche
Beets, Billy Conn, University of Minnesota, Medicine, Cherokee
Begay, Adriann Westine, University of North Dakota, Medicine, Navajo
Begay, Elsie, University of New Mexico, Nurse, Navajo
Begay, Josie Carol, College of St. Catherine, Nurse, Lac Courte Oreilles Chippewa
Begay, Morris Wayne, University of New Mexico, Medical Technology, Navajo
Begay-Potvin, Angela Ann, Kansas Newman College, Nurse, Navajo
Belgarde, Patrick Edward, North Dakota State University, Pharmacy, Chippewa Cree
Ben, Elaine Ann, University of New Mexico, Nurse, Navajo
Benally, Belinda Jane, Arizona State University, Nurse, Navajo
Berryhill, Wayne Edward, University of Minnesota, Medicine, Creek
Bethel, Dennis Wayne, University of Minnesota, Medicine, Alabama Quassarte Creek
Bethel, Michael Roy, College of the Sequoias, Nurse, Choctaw
Binford, Josephine J., University of Mary Hardin-Baylor, Nurse, San Juan Pueblo
Birdinground Hogan, Valerie Suzette, University of Osteopathic Medicine & Health Science, Physician Assistant, Crow
Birney, Debra Lynn, Oklahoma Baptist University, Nurse, Creek
Bitsinni, Susan, University of New Mexico, Pharmacy, Navajo
Bitsoie, Irene Gail, Northland Pioneer College, Nurse, Navajo
Black, Angela Dawn, Oklahoma State University, Medicine, Chickasaw
Black, Geoffrey Wayne, University of Southern California, Medicine, Choctaw
Blackwater, Marlene, Arizona State University, Nurse, Navajo Blue, Donald Ray, East Central Oklahoma State University, Sanitarian, Lumbee
Blue, Joanne Cecile, University of North Dakota, Nurse, Turtle Mountain Chippewa
Blue, Lawrence Donald, University of North Dakota, Nurse, Turtle Mountain Chippewa
Blue, Virginia Pamela, University of North Dakota, Nurse, Turtle Mountain Chippewa
Bluehouse, Orpha Eleanor, University of New Mexico, Dental Hygiene, Navajo
Bollig, John Joseph, Oregon Health Sciences University, Medicine, Alaskan
Bormann, Teresa Jo, University of North Dakota, Medicine, Oglala Sioux
Bowker, Debra Dawn, University of Minnesota, Medicine, Cheyenne River Sioux
Brady-Davis, Elizabeth Ann, Oklahoma City Community College, Nurse, Citizen Band Potawatomi
Braziel, Holly Hean, Nurse, Oklahoma Baptist University, Chickasaw
Brooks, Michael Dwayne, Harvard Medical School, Medicine, Lumbee Brown, Valerie Lee, University of North Dakota, Medicine, Cherokee
Bruce, Ella Mae, University of North Dakota, Social Work, Turtle Mountain Chippewa
Bruce, Roger Allen, University of Washington, Physician Assistant, Turtle Mountain Chippewa
Burris, Lorena Jean, Oklahoma State University, Clinical Psychology, Osage
Burton, Pamela Michele, Pacific University College of Optometry, Optometry, Tlingit-Haida
Butler, Jana Sue, Rogers State College, Nurse, Cherokee
Butler, Sherry L., Bartlesville Wesleyan College, Creek
Butler, Thetath Ann, Rose State College, Health Records, Creek
Bydonie, Sharon Lynn, Northern Arizona University, Dental Hygiene, Navajo
Caley-Hestnes, Jean Karen, University of Alaska, Nurse, Alaskan
Campbell-Abrahamson, Lucinda Jane, Eastern Washington State College, Nurse, Spokane
Carey, Matthew, University of Arkansas, Engineer, Cherokee
Carlos, Angela Mary, The Fielding Institute, Clinical Psychology, Seneca
Carlson, Gwendolyn Ann, Alderson-Braddus College, Physician Assistant, Aleut
Carlson, Rochelle Ann, University of Wisconsin, Nurse, Bad River Band Chippewa
Carmona, Happy Elizabeth, University of New Mexico, Medicine, Omaha
Carpenter, James Spencer, University of Minnesota, Medicine, Yankton Sioux
Carpio, Jean Marie, University of New Mexico, Pharmacy, Laguna Pueblo
Cartier, Michelle Renae, University of North Dakota, Nurse, Sisseton-Wahpeton Sioux
Casey, Juanita Louise, New Mexico State University, Nurse, Creek
Chambellan, David Begay, University of New Mexico, Pharmacy, Navajo
Charlie, Jimmie Ray, Stanford University, Medicine, Navajo
Chavez, Virgil Thompson, San Juan College, Computer Science, Navajo
Chee, Vicky Jayne, University of Utah, Physician Assistant, Navajo
Chosa, Erik James, University of Montana, Pharmacy, Chippewa
Chouteau, Christine Wilma, Dartmouth Medical School, Medicine, Cherokee
Christensen, Eric James, University of Nevada, Engineer, Navajo
Clanton, Marc Anthony, University of North Dakota, Clinical Psychology, Cherokee
Clark, Leroy Allen, University of Minnesota, Medicine, Cheyenne River Sioux
Clarke, Rita Catherine, Salish Kootenai College, Nurse, Turtle Mountain Chippewa
Claw, Carol Jean, Western New Mexico Unviersity, Substance Abuse Counseling, Navajo

Cleveland, Sharon, University of New Mexico, Nurse, Navajo
Cleveland, Valerie Ann, Sisseton Wahpeton Community College, Nurse, Sisseton-Wahpeton Sioux
Coby-Roa, Celestine Rosetta, Boise State University, Health Records, Shoshone-Paiute
Connelly, Carla Ann, Salish Kootenai College, Nurse, Blackfeet
Cooper, Tina Marie, University of Oklahoma, Medicine, Chickasaw
Cooper, Tracey Anne, University of North Dakota, Nurse, Sisseton-Wahpeton Sioux
Corbine, Joseph Lawrence, University of North Dakota, Clinical Psychology, Bad River Band Chippewa
Cordier, Danna Rae, Montana State University, Nurse, Salish & Kootenai
Correa, Jolene Michelle, Albuquerque Technical Vocational Institute, Nurse, Laguna Pueblo
Craig, Velliyah Ellen, University of New Mexico, Pharmacy, Navajo
Crank, Ernestine, Regis College, Nurse, Navajo
Crawford, Jamisu Lynn, Salish Kootenai College, Nurse, Blackfeet
Crawford, Kartha Lamae, Langston Unviersity, Nurse, Cherokee
Crawford, Louis A., University of South Dakota, Medicine, Sisseton-Wahpeton Sioux
Crittenden, Robert Bryan, University of Oklahoma, Medicine, Cherokee
Crouch, Carol Vallee, East Central Oklahoma State Univerity, Sanitarian, Salish & Kootenai
Crouch, J. Kase Mathis, East Central Oklahoma State Univerity, Sanitarian, Salish & Kootenai
Cummings-Wero, Maeuneka, Northern Arizona University, Sanitarian, Navajo
Cummins, Phillip Aaron, University of New Mexico, Nurse, Assiniboine & Sioux
Cuny, Jennifer Kathleen, Presentation College, Nurse Ogalala Sioux
Custer, Michelle Hope, University of New Mexico, Health Records, Navajo
Dagen, Kelly Ann, College of St. Scholastica, Nurse, Minnesota Chippewa
Dahozy, Roger Norman, Arizona State University, Engineer, Navajo
Dale, Regena Nichol, Loma Linda University, MPH, Navajo
Dance, Patricia Anne, Seminole Junior College, Nurse, Choctaw
Daniel, Mary Frances, Connors State College, Nurse, Cherokee
Darwin, Donovan, University of New Mexico, Engineer, Navajo
Darwin, Wilbert, University of New Mexico, Pharmacy, Navajo
Daugherty, Christine Marie, Simmons College, Nurse, Citizen Band Potawatomi
Davis, Aaron, Indiana University, Paraoptometry, Navajo
Davis, Brenda Ann, University of North Dakota, Nurse, Turtle Mountain Chippewa
Davis, Celeste Lenore, University of Oklahoma, MPH, Chickasaw
Davis, Daniel G., University of North Dakota, Engineer, Turtle Mountain Chippewa
Davis, Deanna Eileen, University of New Mexico, Nurse, Navajo
Davis, Jamie Dee, Oklahoma State University, Clinical Psychology, Creek
Davis, Mitchell Ryan, Boston University, Medicine, Cherokee
Dayzie, Bernadette, University of Colorado, Nurse, Navajo
Deckard, Christy Lynn, Rogers State College, Nurse, Cherokee
DeLong, Amy Joe, University of Minnesota, Medicine, Wisconsin Winnebago
Derrisaw, James Alan, University of Colorado, Medicine, Creek
Descheny, Maybelle H., Weber State University, Sonography, Navajo
Detsoi-Smiley, Pamela Jean, University of New Mexico, Nurse, Navajo
Dickson, Janise, Northern Arizona University, Nurse, Navajo
Dickson, Jeffrey Todd, East Central Oklahoma State University, Sanitarian, Choctaw
Dixon, Shelly Jo, Rogers State College, Chemical Dependency Counseling, Cherokee
Douville, Andre Maurice, South Dakota School of Mines & Technology, Engineer, Oglala Sioux
Dubray, Kansas Lee, University of Minnesota, Medicine, Cheyenne River Sioux
Ducheneaux, Colette Ann, University of North Dakota, Medicine, Cheyenne River Sioux
Ducheneaux, Lorelei Dale, Presentation College, Nurse, Cheyenne River Sioux
Dugaqua-Young, Elizabeth Ann, University of Hawaii, Dietetics, Alaskan
Dumontier, Timothy Albert, University of Washington, Medicine, Kootenai of Idaho
Dusterhoff, Linda Lee, University of Washington, Nurse Practitioner, Blackfeet
Duverger, Diane Monts, Langston University, Dietetics, Creek
Eaglestaff, Mary Lynn, University of North Dakota, Nurse, Three Affiliated Tribes-Ft. Berthold
Earl, Leah Renee, Arizona State University, Nurse, Navajo
Eddins, Paul Eugene, University of Minnesota, Medicine, Navajo
Elliott, Billy Wayne, Heritage College, Chemical Dependency Counseling, Wyandotte
Emerson, Mathan Daniel, University of New Mexico, Nurse Navajo
Epperson, Tammy Jo, University of Oklahoma, Physical Therapy, Cherokee
Eriacho, Marlene J., University of New Mexico, Nurse, Navajo
Esquiro, Jennifer Gail Azure, University of Washington, Medicine, Tlingit & Haida
Essendrup, Lisa Marie, Arizona State University, Nurse, Aleut
Estrada, Ronni-Leigh, Syracuse University, Social Work, Onondaga
Etchison, Dollie Ann, Rogers State College, Nurse, Creek
Etier, Tonia Jean, University of New Mexico, Nurse, Cherokee
Etsitty, Edison Virgil, University of Minnesota, Medicine, Navajo
Finley, Jennifer Lynn, Eastern Washington State College, Nurse, Confederated Tribes Colville
Finley, Tina Dionne, East Central Oklahoma State University, Nurse, Choctaw
Fiorello, Albert Bruno, University of New York at Buffalo, Medicine, Cherokee
Foster, Bryan Mace, University of Montana, Pharmacy, Iowa
Fralinger, Jack Bruce, University of Minnesota, Medicine, Washoe
Francis, Deannamay, University of New England, Medicine, Passamaquoddy
Francis, Theresa R., University of New Mexico, Nurse, Laguna Pueblo
Francisco, Regina Mary, Northern Arizona University, Nurse, Navajo
Frank, Coleen Lou, Boise State University, Nurse, Navajo
Fryrear, Janette Elaine, University of Arizona, Clinical Psychology, Chickasaw
Fuson, Elizabeth, Northern Arizona University, Dental Hygiene, Navajo
Gaikowski-Shindelbower, Rose Anne, University of North Carolina, Nurse, Sisseton-Wahpeton Sioux
Garcia, Dean John, University of Utah, Pharmacy, Three Affiliated-Ft. Berthold
Garcia, Derrick Anthony, University of New Mexico, Engineer, Santa Ana Pueblo
Gardner, Stacee Lee, Langston University, Nurse, Cherokee
Garlow, Cheryl Gay, D'Youville College, Physician Assistant, Seneca
Garman, Camille Diann, Niagara County Community College, Nurse, Seneca-Cayuga
Garnenez, Ragene Ann, University of New Mexico, Medical Technology, Navajo
Garrison, Chad Matthew, University of Oklahoma, Dental, Cherokee Geronimo, Sonya, New Mexico State University, Nurse, Mescalero Apache
Gesinger, Ruthie Ann, Cheyenne River Lakota College, Nurse, Cheyenne River Sioux
Geurin, Shannon Leigh, Bacone College, Nurse, Cherokee Goldman, Ryan Mitchell, University of Central Arkansas, Radiology, Cherokee
Gonzales, Pat Marie, Redlands Community College, Nurse, Kiowa Gourneau, Lori Ann, University of Minnesota, Medicine, Turtle Mountain Chippewa
Gourneau, Ronald Paul, University of South Dakota, Medicine, Turtle Mountain Chippewa
Grant, Amelda Rose, University of North Dakota, Nurse, Turtle Mountain Chippewa
Gray, Lisa Irene, University of Tulsa, Nurse, Chickasaw
Gray, Thomas Kevin, University of North Dakota, Medicine, Salish & Kootenai
Green, Ellen Louise, Oklahoma State University, Dietetics, Choctaw
Green, Ross Preston, Southwestern State College, Pharmacy, Choctaw
Green, Stacy Lynn, Bacone College, Radiology, Cherokee
Griggs, Roger Lee, University of Arizona, Medicine, White Mountain Apache
Grinnell-Evans, Regina Marie, Oklahoma City University, Nurse, Sac & Fox
Gust, Jarvis Jay, University of Montana, Physical Therapy, Crow
Gustafson, Janice Kay, University of Minnesota, Pharmacy, Red Cliff-Lake Superior Chippewa
Guy, Kim Rayna, Oregon Health Sciences University, Medicine, Cherokee
Guzman, Angela, Arizona State University, Accounting, Navajo
Halwood, Veronica J., Northern Arizona University, Dietetics, Navajo
Hanson, Brenda Lee, College of St. Scholastica, Physical Therapy, Minnesota Chippewa

Harrison, Marquetta Ann, Bacone College, Nurse, Creek
Harrison, Wendy Lynn, University of Oklahoma, Pharmacy, Chickasaw
Harrison-Herrod, Carlene, University of New Mexico, Nurse Practitioner, Navajo
Harvey, Arthur John, California Lutheran University, Computer Science, Oglala Sioux
Hastings, Joannie Reyes, Northern Arizona University, Nurse, Navajo
Hastings, Verna Susan, Arizona State University, Nurse, White Mountain Apache
Hawkins, Andrea Dawn, Oklahoma Baptist University, Nurse, Creek
Hayes, Robert Wayne, University of Oklahoma, Pharmacy, Chickasaw
Hensaw, Aubrey Judson, University of Oklahoma, Dental, Cherokee
Heredia, Joyce Christine, University of New Mexico, Nurse, Zuni
Hillaire, Carla Rae, University of North Dakota, Medical Technology, Lummi
Hole, Rose Marie, University of Mary, Nurse, Turtle Mountain Chippewa
Houston, Jessica Eileen, Bacone College, Nurse, Cherokee
Hoverson, Brenda Lee, University of North Dakota, Nurse, Turtle Mountain Chippewa
Hubbard, Jonathan Shawn, Arizona State University, Computer Science, Navajo
Hudson, Dana Noel, University of Oklahoma, Nurse, Kiowa
Hughes, Randall Joseph, Colorado State University, Computer Science, Oglala Sioux
Isaac, Lisa Gail, East Central Oklahoma State University, Nurse, Choctaw
Jackson, Carrie Billie, South Plains College, Radiology, Navajo
Janis, Rachel Ann, Oglala Lakota College, Nurse, Rosebud Sioux
Jarvis, David Lloyd, University of Washington, Medicine, Osage
Jenkins, Jeffery Lee, University of Oklahoma, Medicine, Cherokee
Jensen, Carmen Sue, Colorado State University, Sanitarian, Oglala Sioux
Jim, Sallie, University of Utah, Physician Assistant, Navajo
Joe, Marilyn, University of New Mexico, Medical Technology, Navajo
Johnson, Murna Mae, University of New Mexico, Nurse, Navajo
Jones, Anna Marie, Mount Marty College, Nurse, Lower Brule Sioux
Jones, Denise Dawn, University of New Mexico, Nurse, Navajo
Jones, Jennifer Katherine, Northeastern State University, Optometry, Cherokee
Jones, Zita Roberta, Salish Kooetenai College, Nurse, Fort Belknap
Joseph, Clarice Louise, Salish Kootenai College, Nurse, Salish & Kootenai
Jumping-Eagle, Sara Juanita, University of North Dakota, Medicine, Oglala Sioux
Kahn-John, M. Michelle, University of New Mexico, Nurse, Navajo
Kalectaca, David, Arizona State University, Engineer, Navajo
Kaniatobe, Angie Jo, New England College, Optometry, Choctaw
Kemppainen, David William, University of Oklahoma, Clinical Psychology, Chippewa
Keplin, Sherry Lee, Minot State University, Computer Science, Turtle Mountain Chippewa
Kezar, Kristina Signe, Montana State University, Dietetics, Fort Belknap
Kienzle, Judy Ann, Marshalltown Community College, Nurse, Oglala Sioux
King, Jeannie, University of New Mexico, Nurse, Navajo
Kinnebrew, Kimberly Joy, University of Washington, Physician Assistant, Alaskan
Kinsey, Cindi Kay, Eastern Oklahoma State College, Nurse, Cherokee
Kipp, Billie Joe, College of Great Falls, Chemical Dependency Counseling, Blackfeet
Klaudt, Monte Ray, University of California, Medicine, Three Affiliated-Ft. Berthold
Knaub, Marcella Ann, Salish Kootenai College, Nurse, Chippewa Cree
Knighten, Eric Lewis, University of Washington, Nurse, Peoria
Krause, Robin Ernest, Stanford University, Medicine, Creek
LaPlante, Kim Renee, University of Anchorage, Nurse, Blackfeet
LaCroix, Castle Renee, University of North Dakota, Nurse, Rosebud Sioux
LaFriniere, Melody Lou, University of North Dakota, Clinical Psychology, Minnesota Chippewa
LaJeunesse, Roxanne Marie, University of North Dakota, Nurse, Red Lake Chippewa
Lambert, Angela Marie, Western Carolina University, Sanitarian, Eastern Cherokee
Lamp-Dillard, Denise Anne, Colorado State University, Clinical Psychology, Alaskan
Lamy, Yvonne Mary, University of New Mexico, Nurse, Zuni
Landavazo, Gloria Christina, University of New Mexico, Nurse, Zuni
Landsberry, Alvin Gene, Bacone College, Nurse, Creek
LaPointe, Mary Katherine, College of St. Scholastica, Nurse, Bad River Band Chippewa
Laroque, Michael John, University of North Dakota, Medicine, Turtle Mountain Chippewa
Larson, Mickie Lynn, Presentation College, Nurse, Citizen Band Potawatomi
Lawrence, Lynnae Susan, University of Arizona, Medicine, Hopi
Lawrence, Morse Paul, University of Nebraska, Physician Assistant, Oglala Sioux
LeCompte, Kira Leigh, Northern State University, Chemical Dependency Counseling, Yankton Sioux
Lee, Eugenia R., University of New Mexico, Engineer, Navajo
Lefthandbull, Marvella Nancy, Medcenter One, Nurse, Cheyenne River Sioux
Leslie, Katrina Jeanette, Creighton University, Dental, Hopi
Leverett, Paula Mae, Central State University, Nurse, Chickasaw
Lewis, Lance D., University of Washington, Physician Assistant, Gila River Pima-Maricopa
Lippman, Judy A., Eastern Washington University, Social Work, Spokane
Little, Chaleen Laurie, Arizona State University, Dietetics, Oglala Sioux
Lofgren, Paul Arthur, University of Maryland, Social Work, Cherokee
Logue, Don Ed, University of Oklahoma, Dental, Cherokee
Lohnes, Lisa Rae, University of New Mexico, Nurse, Devils Lake Sioux
Lonasee, Kelly Elizabeth, University of New Mexico, Nurse, Zuni
Longhorn-McClelland, Pamela Ann, University of Tulsa, Nurse, Sac & Fox
Lord, Darlene Marie, University of Alaska, Nurse, Alaskan
Louis-Lopez, Evellen Marie, Wenatchee Valley College, Chemical Dependency Counseling, Confederated Tribes Colville
Luger, Patrick A., University of North Dakota, Medicine, Standing Rock Sioux
Lujan, Jose Vecenti, University of New Mexico, Accounting, Taos Pueblo
Lujan, Natasha Jane, University of New Mexico, Medicine, Taos Pueblo
Lynch, Roger Harvey, University of Arizona, Engineer, Navajo
MacDonald, Deborah Ann, University of Washington, Health Records, Assiniboine & Sioux
MacGregor, Mike G., Stanford University, Engineer, Spokane
Manion, Christopher John, University of Colorado, Medicine, Osage
Marquez, Frank Joseph, University of Southern California, Physician Assistant, Northfork Mono
Martinez, Alyssa Ann, University of North Dakota, Nurse, Standing Rock Sioux
Matt, Victoria, Tufts University, Medicine, Navajo
Mault, Clifford Homer, Ohio University, Medicine, Cherokee
McGath, Ron Christopher, University of New Mexico, Pharmacy, Oglala Sioux
McGilberry, Charles Stephen, Okahoma City University, Chemical Dependency Counseling, Choctaw
McMillan, Henry Paul, University of North Carolina, Physical Therapy, Lumbee
Mermejo, Deloris Lynne, University of San Francisco, Nurse, Picuris Pueblo
Meyer, Pamela Jean, Salish Kootenai College, Nurse, Fort Belknap
Meyers-Bartos, Elizabeth, University of Oklahoma, Nurse Practitioner, Seminole
Michalk, Kathleen Ruthanne, Chicago College of Osteopathic Medicine, Medicine, Minnesota Chippewa
Milford, Ginalori, University of New Mexico, Nurse, Navajo
Miller, Marcella, Phoenix College, Health Records, Tohono O'odham
Mills, Trivean, Arizona State University, Social Work, Cocopah
Miner, Theresa Diane, Oklahoma Baptist University, Nurse, Seminole
Mist, Heidi Christine, Tulane University, Medicine, Cherokee
Mitchell, Sherry Donnell, University of Oklahoma, Physical Therapy, Creek
Monteiro, Lomona Rene, Georgetown University, Medicine, Narragansett
Montreal, Eunice Rose, Presentation College, Nurse, Cheyenne River Sioux
Moore, Thomas Taylor, Fuller Theological Seminary, Clinical Psychology, Minnesota Chippewa
Mora, Paula Renee, Stanford University, Medicine, Navajo
Moran, Michelle Medith, Mary College, Nurse, Cheyenne River Sioux
Morgan, Jay C., University of New Mexico, Pharmacy, Navajo
Morris, Elizabeth Lynette, Connors State College, Nurse, Creek

Morris, Frances, Northland Pioneer College, Nurse, Navajo
Morris, Tina Marie, Northern Arizona University, Engineer, Navajo
Morton, Ronald Dean, California School of Professional Psychology, Clinical Psychology, Cherokee
Mullins-Moynihan, Kelly Lynn, Illinois School of Professional Psychology, Clinical Psychology, Caddo
Murillo, Allison, Illinois Benedictine College, Dietetics, Grand Traverse Ottawa & Chippewa
Myers, Lenora, Arizona State University, Nurse, Chippewa Cree
Nabahe, April Racquel, University of North Dakota, Medicine, Navajo
Natonabah, Ernest, San Juan Community College, Nurse, Navajo
Navarro, Freida Anne, University of Washington, Medicine, Alaskan
Negale, Verenda Christine, University of New Mexico, Nurse, Navajo
Nelson, Allen Keith, Chemeketa Community College, Chemical Dependency Counseling, Klamath
Nelson, Tina Ann, San Juan College, Computer Science, Navajo
Newbrough, Dayton Dean, South Dakota School of Mines & Technology, Engineer, Cheyenne River Sioux
Nez, Alberta, Northern Arizona University, Nurse, Navajo
Nez, Lucinda Lou, Northland Pioneer College, Nurse, Navajo
Nez, Victoria, Arizona State University, Nurse, Navajo
Notah, Sharon Jean, University of New Mexico, Nurse, Navajo
O'Donnell, Roselyn Keams, University of New Mexico, Medicine, Navajo
OBrien, Kevin Lee, Tulane University, Medicine, Choctaw
OConnell, Shelby Joan, Southwestern Oklahoma State University, Nurse, Choctaw
Okemah, John Lee, University of North Dakota, Medicine, Kickapoo
Oosahwe, Elizabeth Ann, Northeastern Oklahoma State University, Medical Technology, Cherokee
Ovah, Joycelyn, University of New Mexico, Nurse, Hopi
Oxendine, Audrey Dell, North Carolina State University, Engineer, Lumbee
Ozbirn, Kathryn Elizabeth, East Central Oklahoma State University, Nurse, Chickasaw
Pablito, Bertha, University of New Mexico, Nurse, Zuni
Padilla, Tiffany Michelle, University of Arkansas, Nurse, Paiute/Maidu/Pit River/Washoe
Painter, Michael Wayne, University of Washington, Medicine, Cherokee
Palm, Korri Jane, Salish Kootenai College, Nurse, Cherokee
Paris, Patti Ann, University of Vermont, Medicine, Penobscot
Patterson, Gregory Frank, Oklahoma Baptist University, Nurse, Cherokee
Pebworth, Barry Wade, University of Oklahoma, Physician Assistant, Choctaw
Pepion-Healy, Lita Jean, University of Nevada, Medicine, Blackfeet
Perryman, Debbie Renee, University of Oklahoma, Physical Therapy, Creek
Peters, Melinda Sue, Redlands Community College, Nurse, Choctaw
Peters, Tony Dale, East Los Angeles College, Nurse, Sisseton-Wahpeton Sioux
Peterson, Cheryl, University of Washington, Nurse, Turtle Mountain Chippewa
Petrie, Sarah Ann, University of Oregon, Nurse, Confederated Coos Lower Umpqua & Siuslaw
Peyketewa, Al Lotario, Weber State College, Medical Technology, Zuni
Pfliger, Rose B., University of North Dakota, Nurse, Three Affiliated-Ft. Berthold
Phillips, Tomas Scott, University of Montana, Pharmacy, Salish & Kootenai
Polacca, Mona Ann, Arizona State University, Social Work, Colorado River
Polequaptewa, Honani, Northern Arizona University, Physical Therapy, Hopi
Pollock, Patricia Mary, Salish Kootenai College, Nurse, Blackfeet
Pollock, Steven Eugene, University of Washington, Medicine, Blackfeet
Pond, Leland James, University of Montana, Medical Technology, Assiniboine & Sioux
Porter, Billy James, University of Oklahoma, Engineer, Seminole
Pound-Card, Shelly Kay, Saint Leo College, Medical Technology, Turtle Mountain Chippewa
Preslopski, Michelle Alesandra, University of Pittsburgh, Nurse, Otoe-Missouria
Pugh, Jody Marie, Southern Nazarene University, Nurse, Otoe-Missouria
Quam, Elana Marie, University of New Mexico, Nursing, Laguna Pueblo
Quam, Paula Uvonne, University of New Mexico, Nurse, Zuni
Quam, Yolana Margaret, Pima Medical Institute, Radiology, Laguna Pueblo
Quisno, Jacqueline Elaine, University of Washington, Medicine, Oglala Sioux
Rafferty, Marc Shannon, University of Oklahoma, Pharmacy, Citizen Band Potawatomi
Reategui, Tyra Nicole, University of North Dakota, Nurse, Turtle Mountain Chippewa
Redeye, Monica, D'Youville College, Physician Assistant, Seneca
Redman, Kay Lynne, Medical College of Wisconsin, Medicine, Creek
Redshirt, Trudy Rae, Oklahoma Baptist University, Nurse, Navajo
Reeves, Kevin Davis, Duke University, Physical Therapy, Lovelock Paiute
Reynolds, Victoria A., University of Utah, Physician Assistant, Te-Moak Western Shoshone
Rock-Arnoux, Dianna Joy, Central Washington University, Medical Technology, Blackfeet
Rogers, Charles Michael, University of Oklahoma, Medicine, Creek
Romancito, Gayle Rozelle, University of New Mexico, Nurse, Zuni
Roundstone, Tamara Ann, Salish Kootenai College, Nurse, Northern Cheyenne
Russell, Jeffrey Lynn, Scholl College of Podiatry, Podiatry, Cherokee
Rutter, James Dull, University of Kansas, Medicine, Cherokee
Saganey, Sarah Patterson, University of Health Sciences, Physician Assistant, Navajo
Sahmaunt, Rebecca Jo, East Central Oklahoma State University, Nursing, Kiowa
Sam, Orena Ann, University of New Mexico, Nurse, Navajo
Sanders, Jay Derek, Southwestern State College, Pharmacy, Choctaw
Sandoval-Lucero, Lucinda, University of New Mexico, Medicine, San Felipe Pueblo
Sangrey, Cory Leigh, Northern Montana College, Computer Science, Chippewa Cree
Sargent, Christopher John, University of Washington, Medicine, Alaskan
Scott, Larry Brent, Oklahoma State University, Medicine, Cherokee
Seger, Jeanine, University of Kansas, Social Work, Cheyenne-Arapaho
Self, Andrea Joy, Southwestern State College, Pharmacy, Cherokee
Shawa, Wynonah Anne, University of North Dakota, Medicine, Ottawa & Chippewa
Shipp, Darren, University of Oklahoma, Medicine, Ponca
Simon, Ramona Patricia, University of Mary, Nurse, Cheyenne River Sioux
Smiley, Bennett, Fort Lewis College, Computer Science, Gila River Pima-Maricopa
Smith, Dan Mark, Northern Arizona University, Physical Therapy, Oneida
Smith, Farrel Wayne, East Central Oklahoma State University, Sanitarian, Seminole
Smith, Ganene Kay, Eastern Washington University, Social Work, Coeur D'Alene
Smith, Karole Denise, University of Oklahoma, Health Education, Navajo
Smith, Veronica Ann, Yale University, Nurse Practitioner, Navajo
Smith-Yazzie, Nadine Rae, Northern Arizona University, Dental Hygiene, Navajo
Snow, Carl Donelle, Northeastern Oklahoma State University, Sanitarian, Creek
Sockbeson, Dorothy A., University of Maine, Nurse Practioner, Penobscot
Somoza, Melinda, University of North Dakota, Medicine, Navajo
Speicher, Amanda Wenona, Dartmouth Medical School, Medicine, Cherokee
Spencer, Irene B., Albuquerque Technical Vocational Institute, Nurse, Navajo
Stacey, Miriam Jean, University of New Mexico, Nurse, Hopi
Stately, Anthony Louis, California School of Professional Psychology, Clinical Psychology, Oneida
Stepp, Peggy, Bacone College, Nurse, Cherokee
Stewart, Cynthia Jean, Tacoma Community College, Respiratory Therapy, Rosebud Sioux
Stewart, Deanna, Phoenix College, Health Records, Navajo
Stewart, Mark Gregory, Rush University, Medicine, Echota Cherokee
Stoeckmann, Kyle Jane Clark, University of Arizona, Medicine, Caddo
Stone, Joseph B., Utah State University, Clinical Psychology Blackfeet
Stout, Dana Rene, University of Oklahoma, Physical Therapy, Cherokee
Strickland, Deena Joanne, East Carolina University, Nutrition, Lumbee
Studer, Laurence Wilfred, Ohio State University, Social Work, Eastern Band Cherokee
Stumblingbear, Zoie Ellen, University of Central Oklahoma, Chemical Dependency Counseling, Kiowa
Sunagoowie, Jack, Washington University, Social Work, Cherokee

Sunday, Robyn Rachelle, University of Oklahoma, Nurse, Cherokee
Sunday-Carter, Lisa Diane, University of Arkansas, Nurse, Cherokee
Taylor, Laurie Ann, University of Vermont, Medicine, Miami
Teller, Donnell Rae, Northern Arizona University, Engineer, Navajo
Thomas, Jennifer Lee, University of North Dakota, Nurse, Turtle Mountain Chippewa
Thomas, Karen Suzanne, University of Oklahoma, Physician Assistant, Choctaw
Thomas, Leonard Don, University of New Mexico, Medicine, Navajo
Thompson, Regina, San Juan Community College, Nurse, Navajo
Thunder, Michael, University of Wisconsin, Nurse, Winnebago
Tiger, Brandy Susan, University of Oklahoma, Radiology, Creek
Tincher, Michelle, University of North Dakota, Medicine, Fort Belknap
Tobacco, Dajuanna Rae, National College, Health Records, Oglala Sioux
Tom, Virginia D., University of Utah, Physician Assistant, Navajo
Tonemah, Darryl Parker, University of Nebraska, Clinical Psychology, Kiowa
Torivio, Cheryl Ann, University of Missouri, Dental, Hopi
Treat, Shannon Nichole, East Central University, Chemical Dependency Counseling, Chickasaw
Truesdell, Michael Paul, University of Arizona, Medicine, White Mountain Apache
Tso, Lenora, University of New Mexico, Nurse, Navajo
Tsosie, Aurelia Frances, Phoenix College, Health Records, Navajo
Umber, Steven Ray, University of Michigan, Nurse, Mississippi Band Choctaw
Vanatta, Elizabeth Ann, Pittsburg State University, Nurse, Cherokee
Vanbuskirk, Paula Elaine, University of Oklahoma, Dental, Chickasaw
Vazquez, Rose Lydia, California School of Professional Psychology, Clinical Psychology, Navajo
Vent, Liza Sarah, University of Alaska, Nurse, Alaskan
Vicenti, Darren, University of New Mexico, Medicine, Hopi
Vickers, Francine Judith, University of Colorado, Dental, Isleta Pueblo
Villines, Bobby Travis, East Central Oklahoma State University, Sanitarian, Cherokee
Vizenor, Kristie, North Dakota State University, Pharmacy, Minnesota Chippewa
Wagers, Shirley Marie, Southern University, Social Work, Oglala Sioux
Wahnee, Kari Kay, University of Oklahoma, Physician Assistant, Kiowa
Waldroup, Anthony Wayne, University of Oklahoma, Medicine, Tonkawa
Walker, Carrie Ann, University of South Dakota, Medicine, Creek
Walker, Sharon K., University of Mary, Nurse, Minnesota Chippewa
Wanna, Katherine Nora, University of North Dakota, Medical Technology, Sisseton-Wahpeton Sioux
Warlick, Ethan Aaron, University of Kansas, Medicine, Cherokee
Warlick, Matthew Eli, University of Missouri, Dental, Cherokee
Warren, Trent Brian, University of Utah, Medicine, Salish & Kootenai
Warrington, Sue Carol, University of Wisconsin, Nurse Practitioner, Bad River Chippewa
Wassillie, Marcia Elice, Washington State University, Dietetics, Aleut
Watts, Travis E., University of Oklahoma, Pharmacy, Choctaw
Welch, Brian Keith, University of Oklahoma, Pharmacy, Choctaw
Welch, Trudy Ella, University of North Dakota, Nurse, Eastern Band Cherokee
Wells, Craig James, South Dakota State University, Engineer, Cheyenne River Sioux
Wero, Anthony, Northern Arizona University, Physical Theraphy, Navajo
West, Darin Joy, Towson State University, Sanitarian, Mississippi Choctaw
West, Michael Curtis, University of North Dakota, Medicine, Mississippi Choctaw
West, Ronald Reed, University of Miami, Physical Theraphy, White Mountain Apache
West, Sophia, University of North Dakota, Nurse Practitioner, Cheyenne River Sioux
Westbrook, Sonja Marie, California School of Professional Psychology, Clinical Psychology, Comanche
Whipple, Katherine Joy, University of Minnesota, Medicine, Spokane
White, Anna Marie, University of North Dakota, Nurse, Turtle Mountain Chippewa
White, Betty Jane, University of Kansas, Nurse, Cherokee
White, Kalvin Glenual, University of Utah, Clinical Psychology, Navajo
White Horse, Marilyn Ruth, University of North Dakota, Nurse, Three Affiliated-Ft. Berthold
White Horse, Wyatt Arthur, Augustana College, Medical Technology, Rosebud Sioux
Wilcox, Christopher Michael, University of Missouri, Dental, Cherokee
Williams, Alton Lee, Northern Arizona University, Engineer, Navajo
Williams, Beverly Jean, Bacone College, Nurse, Creek
Williams, Carmelita Sue, University of New Mexico, Nurse, Navajo
Williams, Elise Kay, University of California, Physician Assistant, Yurok of Hoopa Valley
Williams, Jerry Bruce, University of Oklahoma, Computer Science, Chickasaw
Williams, Vern Raymond, Boise State University, Nurse, Creek
Wind, William Alva, University of Oklahoma, Medicine, Creek
Witt, Margaret Ann, Portland State University, Computer Science, Oglala Sioux
Wood, Chelsea Lee, University of Arizona, Dietetics, Alaskan
Wyaco, Michelle, University of New Mexico, Nurse, Zuni
Yazzie, Eulalia Faye, University of New Mexico, Nurse, Navajo
Yazzie, Mildred, University of New Mexico, Nurse, Navajo
Ybarra, Ysidro Patrick, Eastern Montana College, Accounting, Crow
Yellowman, Ida Mae, Pacific Lutheran University, Nurse, Navajo
Yellowman, Marilyn Frances, Arizona State University, Nurse, Navajo
Young, Iola Grace, University of Colorado, Physician Assistant, Alaskan
Yuselew, Melissa, Medical Technology, University of New Mexico, Zuni

Preparatory/Pregraduate Section 103 and 103p:

Abold-Arellano, Carol Ann, Colorado State University, Pre-Medicine, Oglala Sioux
Abrahamson, Sherry Ann, Murray State College, Pre-Nurse, Choctaw
Allick, Tina Marie, University of North Dakota, Pre-Medical Technology, Turtle Mountain Chippewa
Anderson, Lanella April, Arizona State University, Pre-Sanitarian, Navajo
Anderson, Zachariah Jessic, Montana State University, Pre-Medicine, Creek
Baracker, Amber Jo, Gonzaga University, Pre-Medicine, Turtle Mountain Chippewa
Barnoskie, Frances Angela, Oklahoma State University, Pre-Physical Therapy, Creek
Bartholomew, Michael Lee, University of Vermont, Pre-Medicine, Kiowa
Becenti, Joycelyn, Northern Arizona University, Pre-Medical Technology, Navajo
Begay, Ellaverne, Navajo Community College, Pre-Nurse, Navajo
Begay, Tina Rae, Northland Pioneer College, Pre-Dental, Navajo
Bekes, Kimberly Dawn, University of Oklahoma, Pre-Medicine, Navajo
Black, Ann Marie, University of North Dakota, Pre-Medicine, Devils Lake Sioux
Blake, Ginger Elaine, Oklahoma State University, Pre-Physical Therapy, Osage
Bonnet, Bryan Edward, Northeastern State University, Pre-Medicine, Choctaw
Boot, Bettyjo, University of Arizona, Pre-Pharmacy, Zuni
Bowie, Ursula Marie, Colorado State University, Pre-Physical Therapy, San Juan Pueblo
Bradsher, Lisa Ann, East Central University, Pre-Medicine, Creek
Brock-Thomas, Tammy Sue, Glendale Community College, Pre-Physical Therapy, Choctaw
Brown, Judy Keith, University of Oklahoma, Pre-Medicine, Cherokee
Brown, Stephanie Michele, Northern Oklahoma College, Pre-Nurse, Apache of Oklahoma
Burr, Larae Jordanna, Arizona State University, Pre-Physical Therapy, Three Affiliated-Ft. Berthold
Campbell, Laurel Suzette, East Central Oklahoma State University, Pre-Nurse, Choctaw
Campbell, Stephen Franklin, New Mexico Highlands University, Pre-Medicine, Osage
Camplain, Jamie Lynn, University of Central Oklahoma, Pre-Dental, Choctaw
Camplain, Lisa Nichole, University of Central Oklahoma, Pre-Pharmacy, Choctaw
Capitan, Tia Maria, University of New Mexico, Pre-Nurse, Navajo
Carpenter, Michael Keith, University of Central Oklahoma, Pre-Medicine, Choctaw
Chase, Duane Maynard, University of New Mexico, Pre-Medicine, Lower Brule Sioux
Chesnut, Tracie Lynn, Cameron University, Pre-Pharmacy, Comanche

Chino, Joachim David, University of New Mexico, Pre-Medicine, Navajo
Clah, Melinda, Navajo Community College, Pre-Nurse, Navajo
Clani, Brenda Lynn, University of New Mexico, Pre-Medicine, Navajo
Clarke, David Eric, Carroll College, Pre-Medicine, Santa Ynez of Chumash
Cody, Michael Stephen, Tyler Junior College, Pre-Nurse, Kiowa
Coleman, Monica Faye, Southwestern Oklahoma State University, Pre-Pharmacy, Cherokee
Corbine, David Paul, University of North Dakota, Pre-Medicine, Turtle Mountain Chippewa
Cotton, Debra Harlow, Laramie County Community College, Pre-Nurse, Osage
Crespin, Sheldon Leon, New Mexico State University, Pre-Nurse, Santo Domino Pueblo
Crissler, Mary Jo, University of North Dakota, Pre-Medicine, Turtle Mountain Chippewa
Cruz, Karl Marcus, University of New Mexico, Pre-Medical Technology, San Juan Pueblo
Cruz, Kelly Janice Lynn, University of New Mexico, Pre-Nurse, Acoma Pueblo
Cruz, Mark Deleon, El Paso Community College, Pre-Nurse, Ysleta Del Sur
Currin, Philemon Matthew, Drury College, Pre-Medicine, Creek
Dale, Cindy Rose, Phoenix College, Pre-Nurse, Navajo
Darling, Vickie L., University of Alaska, Pre-Nurse, Alaskan
Davis, Debra Ann, University of Oklahoma, Pre-Medicine, Delaware
Davis, Debra Jean, Northeastern State University, Pre-Medicine, Cherokee
Dexter, Nathan Lee, Lewis & Clark College, Pre-Dental, Klamath
Dugan, Carysa Malaret, University of Idaho, Pre-Medicine, Nez Perce
Dushkin, Veronica Mae, University of Alaska, Pre-Sanitarian, Alaskan
Edwards, Polly Ann, Cameron University, Pre-Medicine, Caddo
Ellis, Kendall Karyl, University of Oklahoma, Pre-Medicine, Chickasaw
Emarthla, Nanelle Joyce, Oklahoma Baptist University, Pre-Nurse, Seminole
Endischee, Flonda, University of Arizona, Pre-Engineer, Navajo
Endischee, Sophia, University of Arizona, Pre-Medicine, Navajo
Eskamire, Lucinda Ruth, Rose State College, Pre-Dental, Creek
Etcitty, Carol M., Albuquerque Technical Vocational Institute, Pre-Nurse, Navajo
Etsitty, Annette Florine, Northern Arizona University, Pre-Dental, Navajo
Everling, Denise Sylvia, Metropolitan State College, Pre-Medicine, Turtle Mountain Chippewa
Favre, Christopher Allen, Mississippi Gulf Coast Community College, Pre-Engineer, Citizen Band Potawatomi
Fields, Julie Marie, Oklahoma Baptist University, Pre-Nurse, Crow
Filteau, Sarah Louise, University of Wisconsin, Pre-Pharmacy, Bad River Chippewa
Fitzpatrick, Robin Dawn, University of Oklahoma, Pre-Medicine, Crow
Fleming, Pamela Elese, Casper College, Pre-Medical Technology, Berry Creek Maidu
Foote, Ricarda Mae, Black Hills State University, Pre-Physical Therapy, Northern Cheyenne
Franceschini, Lisa Anne, University of North Dakota, Pre-Medicine, Choctaw
Freeman, Aaron John, Milligan College, Pre-Physical Therapy, Creek
Gaddy, Aileen, University of New Mexico, Pre-Nurse, Navajo
Garcia, Daryl Katherine, University of New Mexico, Pre-Pharmacy, Navajo
Garcia, Margaret Ann, Albuquerque Technical Vocational Institute, Pre-Nurse, Laguna Pueblo
Garza, Daniel, University of Oklahoma, Pre-Medicine, Comanche
Gilliam, Nick Jerome, University of Arizona, Pre-Medicine, Pomo
Gomez, Sylvia R., Eastern Arizona College, Pre-Medicine, San Carlos Apache
Gorman, Marianita Elizabeth, University of New Mexico, Pre-Medicine, Navajo
Goulet, Lori Lynn, University of North Dakota, Pre-Nurse, Turtle Mountain Chippewa
Grimley, Phoebe Martine, Santa Fe Community College, Pre-Physical Therapy, Navajo
Hall, Wynne Lee, Poland Community College, Pre-Dental, Klamath
Hamilton, Charles Juaquin, Bacone College, Pre-Engineer, Sac & Fox
Haney, Carrie Leigh, Connors State College, Pre-Nurse, Cherokee
Hanks, Mary Jo, University of North Dakota, Pre-Medical Technology, Standing Rock Sioux
Harder, Amanda Gayle, University of Oklahoma, Pre-Dental, Cherokee
Hardin, Christina, University of North Carolina, Pre-Medicine, Lumbee
Hardy, Valonia Lynn, Mesa Community College, Pre-Nurse, Navajo
Harris, Leslie J., University of Maryland, Pre-Physical Therapy, Turtle Mountain Chippewa
Harris, Pamela Sue, Seminole Junior College, Pre-Nurse, Creek
Harrison, Marjorie, University of New Mexico, Pre-Nurse, Navajo
Harvey, Duane Damian, Fort Lewis College, Pre-Medicine, Navajo
Hassen, Kathleen Lois, Kalamazoo Valley Community College, Pre-Medical Technology, Sault Ste. Marie Chippewa
Hatch, Robert Leroy, Weber State College, Pre-Medicine, Navajo
Hattie, Daryl Faith, University of New Mexico, Pre-Medical Technology, Zuni
Heim, Heather Renee, Benedictine College, Pre-Medicine, Kickapoo
Henry, Julia Ann, Turtle Mountain Community College, Pre-Nurse, Turtle Mountain Chippewa
Henry, Scott Alan, University of Texas, Pre-Medicine, Minnesota Chippewa
Herrod, Jon Davis, Fort Lewis College, Pre-Medicine, Cheyenne-Arapaho
Hilderbrand, Benjamin Joseph, The Union Institute, Pre-Medicine, Choctaw
Hill, Jennifer Lynne, University of Science/Arts of Oklahoma, Pre-Medicine, Kiowa
Hix, Christi Elaine, Northeastern State University, Pre-Physical Therapy, Cherokee
Hogenson, Jamie Lee, University of Oregon, Pre-Dental, Turtle Mountain Chippewa
Hogue, Michael Andrew, University of Central Oklahoma, Pre-Medicine, Choctaw
Holland, Preston Lynn, University of Texas, Pre-Medicine, Cherokee
Holman, Michael Sean, Mendocino College, Pre-Sanitarian, Pomo Hugues, Ross Neil, Ricks College, Pre-Dental, Shoshone-Bannock-Ft. Hall
Hyde, Kelley Shannon, Oklahoma City Community College, Pre-Physical Therapy, Eastern Shawnee
Jackson, Debra Trina, University of Washington, Pre-Medicine, Shoshone-Bannock-Ft. Hall
Jackson, Valerie Denise, Murray State College, Pre-Nurse, Chickasaw
Jenkins, John Michael, Heritage College, Pre-Medicine, Minnesota Chippewa
Jensen, Darcy Nicole, University of Mary, Pre-Physical Therapy, Northern Cheyenne
Jensen, Vanessa, University of Arizona, Pre-Medicine, Navajo
Jerome, Ralph Frederick, Northeastern State University, Pre-Physical Therapy, Choctaw
John, Jennifer Lynn, Saint Olaf College, Pre-Nurse, Alaskan
John, Wilma Annette, University of New Mexico, Pre-Pharmacy, Navajo
Johnson, Shannon Elizabeth, University of Alaska, Pre-Physical Therapy, Alaskan
Jonas-Hjelseth, Roxanne Lynn, University of North Dakota, Pre-Medicine, Turtle Mountain Chippewa
Jones, Janella, Northern Arizona University, Pre-Medicine, Navajo
Jones, Joette, Northern Arizona University, Pre-Nurse, Navajo
Jones, Julia Mae, University of New Mexico, Pre-Nurse, Navajo
June, Keith Casey, Northern Arizona University, Pre-Medicine, Navajo
Kanawite, Freida Mae, Albuquerque Technical Vocational Institute, Pre-Dentistry, Navajo
Kaye, Herbert Forrest, Ohio State University, Pre-Medicine, Hopi
Kelley, Ryan Jason, University of the Pacific, Pre-Dentistry, Covelo of Round Valley
Kennedy, Jay Peirson, University of Maryland, Pre-Medicine, Blackfeet
Kerley, Arthur, Northern Arizona University, Pre-Engineering, Navajo
Khoury, Stephen Carter, Southeastern Oklahoma State University, Pre-Medicine, Creek
Kitto, Larrie Dale, Hood College, Pre-Medicine, Choctaw
Krech, Paul Rock, Arizona State University, Pre-Medicine, Minnesota Chippewa
Lamebull, Charlotte O., Northern Montana University, Pre-Nurse, Fort Belknap
Lankford, Ann Marie, Southwestern Oklahoma State University, Pre-Nurse, Kiowa
Largo, Cheryl, University of New Mexico, Pre-Nurse, Navajo Latocha, William Hawkshield, Saint Mary's College, Pre-Dentistry, Standing Rock Sioux
LaTray, Kevin Scott, Montana State University, Pre-Pharmacy, Blackfeet
Laughter, Richard Kim, University of Utah, Pre-Dentistry, Navajo
Lawhorn, William Andrew, University of Oklahoma, Pre-Physical Therapy, Cherokee

Lawrence, Donavon Clay, Presentation College, Pre-Medical Technology, Cheyenne River Sioux
LeBeau, Michael Edward, Minot State University, Pre-Medicine, Cheyenne River Sioux
Lee, Calbert Aaron, University of New Mexico, Pre-Medicine, Navajo
Lente, Karen Tracey, Glendale Community College, Pre-Medicine, Laguna Pueblo
Little, Kendall Jay, University of Oklahoma, Pre-Medicine, Creek
Littleghost, Sheila-May, University of North Dakota, Pre-Nurse, Devils Lake Sioux
Longstaff, Laura Ann, University of Washington, Pre-Nurse, Seneca
Loretto, Mariam Brenda, Albuquerque Technical Vocational Institute, Pre-Nurse, Jemez Pueblo
Lowrance, Shannon Rae, Oklahoma State University, Pre-Medical Technology, Chickasaw
Mansfield, Shawn Christopher, University of New Mexico, Pre-Engineering, Navajo
Marron, Jackie Mae, Albuquerque Technical Vocational Institute, Pre-Nurse, Laguna Pueblo
Martell, Christi Sue, North Dakota State University, Pre-Pharmacy, Turtle Mountain Chippewa
Martin, Sarah Gail, Northeastern State University, Pre-Physical Therapy, Cherokee
Martinez, David, New Mexico Highlands University, Pre-Medicine, Navajo
Masayesva, Brett Gordon, Stanford University, Pre-Medicine, Hopi
Matthews, Joshua Frame, Northeastern State University, Pre-Physical Therapy, Eastern Band Cherokee
Maxwell, Jami Lee, Oklahoma State University, Pre-Physical Therapy, Cherokee
May, Edward Zane, Yuba College, Pre-Dentistry, Cherokee
McCarthy, Laura Ann, Oklahoma City Community College, Pre-Nurse, Ponca
McGilbra, Mary Lou, University of Oklahoma, Pre-Medicine, Creek
McKenna, Shannon Lee, University of New Mexico, Pre-Engineering, Nambe Pueblo
McNeill, Tracy Dawn, Campbell University, Pre-Pharmacy, Lumbee
Meade, Kathryn Rae, University of North Dakota, Pre-Medicine, Three Affiliated-Ft. Berthold
Melbourne, Linda A., University of North Dakota, Pre-Nurse, Assiniboine & Sioux
Merriman, Anna Marie, Oklahoma City Community College, Pre-Nurse, Chickasaw
Milford, Stanley Michael, University of Arizona, Pre-Medicine, Navajo
Miller, Corine Ann, University of Arizona, Pre-Nurse, Navajo
Montoya, Diana Lee, University of New Mexico, Pre-Nurse, Navajo
Moose, LeDonna Denyse, Chemeketa Community College, Pre-Nurse, Paiute-Shoshone-Bishop
Morgan, Bill, University of New Mexico, Pre-Medicine, Navajo
Murray, Timothy Michael, Oklahoma State University, Pre-Pharmacy, Choctaw
Muzquiz, Leeanna Irvine, Montana State University, Pre-Medicine, Salish & Kootenai
Nadeau, Melanie Ann, University of North Dakota, Pre-Medicine, Turtle Mountain Chippewa
Nannauck, Rhonda Lee, Shoreline Community College, Pre-Nurse, Alaskan
Neumeyer, Angela Lean, Connors State College, Pre-Nurse, Creek Nieschulz, Julie Christine, Seattle University, Pre-Medicine, Oglala Sioux
Olguin, Francine Clarice, Fort Lewis College, Pre-Engineering, Isleta Pueblo
Ortiz, Viola Marie, University of New Mexico, Pre-Nurse, Acoma Pueblo
Otero, Linda Diane, University of Nevada Las Vegas, Pre-Medicine, Fort Mojave
Owens, Janet Lynn, University of Oklahoma, Pre-Dental, Cherokee
Pablo, Faith Stephanie, Pima Community College, Pre-Nurse, Tohono O'odham
Palm, Toby James, University of Montana, Pre-Pharmacy, Cherokee
Parker, Catherine Joyce, University of North Dakota, Pre-Medicine, Comanche
Parker, Jack Andrew, University of New Mexico, Pre-Nurse, Navajo
Parker, Myra Elizabeth, Stanford University, Pre-Medicine, Three Affiliated-Ft. Berthold
Pasquale, Pamela Jo, Pima Community College, Pre-Pharmacy, Choctaw
Paukan, Teresa Marie, University of Alaska, Pre-Nurse, Alaskan Paul, Jillian Katherine, Rochester Institute of Technology, Pre-Medicine, Penobscot
Peshlakai, Pierce Lee, Northern Arizona University, Pre-Medicine, Navajo
Pete, Johnnie, University of New Mexico, Pre-Medicine, Navajo
Peyok, David Matthew, University of Colorado, Pre-Medicine, Cherokee
Phelps, Nancy Elizabeth, Oklahoma Baptist University, Pre-Dentistry, Cherokee
Pitsch, Corey Ann, Eastern Montana College, Pre-Nurse, Turtle Mountain Chippewa
Porter, Gus Ray, East Central University, Pre-Medicine, Seminole
Privett, Jonathan Dale, University of Kansas, Pre-Medicine Cherokee
Quam, Devona Renee, University of New Mexico, Pre-Nurse, Zuni Ranco, Mark Robert, University of Maine, Pre-Sanitarian, Penobscot
Rasberry, Katy Jean, University of Oklahoma, Pre-Medicine, Cherokee
Redelk, Michael Ray, East Central Oklahoma State University, Pre-Sanitarian, Comanche
Redgrave, Corryn Jeneva, University of Arizona, Pre-Medicine, Turtle Mountain Chippewa
Reed, Martin Louis, University of New Mexico, Pre-Engineering, Oglala Sioux
Richardson, Willie Forrest, Pembroke State University, Pre-Medicine, Lumbee
Ridpath, Shandlin, Arizona State University, Pre-Pharmacy, Navajo
Rieck, Charlotte, Adams State College, Pre-Sanitarian, Navajo
Robedeaux, Steela Jo, Northern Oklahoma College, Pre-Sanitarian, Otoe-Missouria
Romancito, Angela, University of New Mexico, Pre-Medical Technology, Zuni
Rose, Richard Travis, University of Oklahoma, Pre-Medicine, Absentee Shawnee
Runningwolf, Michelle, University of Montana, Pre-Medical Technology, Blackfeet
Sam, Michelle Elma, University of Portland, Pre-Medicine, Alaskan
Savage, Fallon Belva, Bemidji State University, Pre-Medicine, Minnesota Chippewa
Schindler-Wieners, Dancia Viola, University of North Dakota, Pre-Medicine, Turtle Mountain Chippewa
Schmidlkofer, Carolyn Louise, East Central Oklahoma State University, Pre-Nurse, Choctaw
Schroyer, Jill Annette, John Brown University, Pre-Medical Technology, Cherokee
Seaton, Madelene, Pima Community College, Pre-Pharmacy, Navajo
Secatero, Shannon, Bacone College, Pre-Pharmacy, Navajo
Sexton, Julie Marie, East Central University, Pre-Medical Technology, Salish & Kootenai
Sherman, Sara Ann, Northland Pioneer College, Pre-Nurse, Navajo
Shields, Darren, East Central Oklahoma State University, Pre-Sanitarian, Absentee Shawnee
Sharader, Kempy Leann, Murray State College, Pre-Nurse, Chickasaw
Shutt, Jason Taylor, Baylor University, Pre-Dentistry, Coushatta
Silversmith, Julie Ann, Central Michigan University, Pre-Nurse, Grand Traverse Ottawa & Chippewa
Smiley, Michelle Margaret, University of Arizona, Pre-Physical Therapy, Gila River Pima-Maricopa
Smith, Jennifer Paige, University of Kansas, Pre-Medicine, Comanche
Smith, Nathan Brant, Southwestern Oklahoma State University, Pre-Pharmacy, Cherokee
Soukup, Steven Leo, University of Minnesota, Pre-Medicine, Red Lake Chippewa
Stanley, Jason Michael, Oklahoma State University, Pre-Nurse, Cherokee
Stover, Gena Ruth, Southwestern Oklahoma State University, Pre-Physical Therapy, Chickasaw
Taliman, Karrie Candi, Arizona State University, Pre-Nurse, Navajo
Tan, Tabitha Leeann, Texas Christian University, Pre-Sanitarian, Navajo
Tapia, Stefani Marlene, University of Texas, Pre-Medical Technology, Ysleta Del Sur
Taylor, Pepper, Southwestern Community College, Pre-Physical Therapy, Eastern Band Cherokee
Taylor, Rebecca T. Lac Courte Oreilles Ojibwa Community College, Pre-Nurse, Lac Courte Oreilles Chippewa
Thibert, Mark Alan, University of Washington, Pre-Medicine, Turtle Mountain Chippewa
Thomas, Paluletta, University of New Mexico, Pre-Medicine, Navajo Thomas, Sheila, New Mexico State University, Pre-Medical Technology, Navajo
Tiger, Teresa, Seminole Junior College, Pre-Nurse, Seminole
Toersbijns, Joann Veronica, University of New Mexico, Pre-Nurse, Isleta Pueblo
Tomblin, Kevin David, University of Washington, Pre-Medicine, Cheyenne River Sioux
Touchine, Jennifer, University of New Mexico, Pre-Nurse, Navajo

Towsend, Cheryl Christine, New Mexico Highlands University, Pre-Pharmacy, Laguna Pueblo
Tracey, Cassandra Glenbah, Mesa Community College, Pre-Nurse, Navajo
Trevino, Karen Sue, Seminole Junior College, Pre-Medical Technology, Jesa Grande Diegueno
Tsingine, Georgia Lynn, Arizona State University, Pre-Medicine, Navajo
Tsinnie, Ardis Rae, Arizona State University, Pre-Nurse, Navajo
Tso, Delsey Renee, Northern Arizona University, Pre-Pharmacy, Navajo
Tso-Garcia, Jennifer Lynn, University of New Mexico, Pre-Medical Technology, Navajo
Tune, Crystal Ann C., Northeastern Oklahoma A&M College, Pre-Nurse, Cherokee
Upshaw, Bryan Michael, Phoenix College, Pre-Dentistry, Navajo Valdo, Gerald David, Santa Fe Community College, Pre-Sanitarian, Acoma Pueblo
Van Hatten, Myrna Elfrieda, University of Washington, Pre-Medicine, Alaska Native
Vander Velden, Shelly Howlett, University of Montana, Pre-Nurse, Salish & Kootenai
Vandusen, Terra Andrea, Seminole Junior College, Pre-Nurse, Cherokee
Vanness, Rhonda Lee, Salish Kootenai College, Pre-Nurse, Salish & Kootenai
Ventura, Verlena Rose, Glendale Community College, Pre-Nurse, Hopi
Viarreal, Genevieve Racheal, Northern New Mexico Community College, Pre-Pharmacy, San Juan Pueblo
Vielle, Nadine Marie, Blackfeet Community College, Pre-Nurse, Blackfeet
Villines, Nathan Clark, East Central University, Pre-Dentistry, Cherokee
Waddell, Barry Lee, University of the Pacific, Pre-Medicine, Koyuk
Wakole, Carmen Jean, Eastern Oklahoma State College, Pre-Nurse, Absentee Shawnee
Warrington, Amy Katherine, Seminole Junior College, Pre-Physical Therapy, Cherokee
Washburn, Kimberly Marie, Albuquerque Technical Vocational Institute, Pre-Nurse, Acoma Pueblo
Watson, Katie Joanne, Northeastern State University, Pre-Physical Therapy, Cherokee
Webster, Edwin Quillin, University of Montana, Pre-Pharmacy, Aleut
West, Michael Clinton, East Central University, Pre-Medicine, Choctaw
White, Denise Davidica, University of North Dakota, Pre-Nurse, Turtle Mountain Chippewa
White, Kevin-Steven, University of Arizona, Pre-Medical Technology, Navajo
Wilkett, David Matthew, Southeastern Oklahoma State University, Pre-Medicine, Choctaw
Willeto, Brenda Ann, University of New Mexico, Pre-Nurse, Navajo
Williams, Deidra, University of Arizona, Pre-Physical Therapy, Navajo
Williams, Gypsy Robyn, University of Nevada Las Vegas, Pre-Medicine, Walker River Paiute
Wilson, Sandra, University of North Dakota, Pre-Dentistry, Northern Cheyenne
Wood, Scott Edward, East Central University, Pre-Medicine, Chickasaw
Woodie, Thelma, Scottsdale Community College, Pre-Nurse, Navajo
Yazzie, Delvin, University of New Mexico, Pre-Medicine, Navajo
Yazzie, Henrietta Joan, Albuquerque Technical Vocational Institute, Pre-Nurse, Navajo
Yazzie, Sheldwin Aaron, University of New Mexico, Pre-Medicine, Navajo
Yeager, Gail Ann, Wayne State University, Pre-Medicine, Acoma Pueblo
Yellowfish, Vicki Battise, El Centro College, Pre-Nurse, Alabama Coushatta
Yellowman, Ryan, Eastern Michigan University, Pre-Medicine, Navajo
Zackar, Luke Gregory, University of Alaska, Pre-Dentistry, Alaska Native

FOR ADDITIONAL INFORMATION CONTACT: Ms. Rosh Foley, Acting Chief, Scholarship Branch, Indian Health Service, Twinbrook Metro Plaza, Suite 100A, 12300 Twinbrook Parkway, Rockville, Maryland 20852, Telephone: 301/443–6197.

Dated: December 28, 1994.

Michel Lincoln,

Acting Director.

[FR Doc. 95–362 Filed 1–5–95; 8:45 am]

BILLING CODE 4160–16–M

Public Health Service

Office of the Assistant Secretary for Health; Privacy Act of 1974; New System of Records

AGENCY: Public Health Service, HHS.

ACTION: Notification of revised system of records.

SUMMARY: In accordance with the requirements of the Privacy Act, the Public Health Service (PHS) is publishing a revised notice of its system of records, 09–37–0021, ''Public Health Service Records Related to Inquiries and Investigations of Scientific Misconduct, HHS/OASH/ORI.'' This system became effective on August 29, 1994 (59 FR 36776, July 19, 1994). In response to the comments received, ORI revised the system notice making changes to the purpose section and to routine uses 4, 5, 6, 7,9, and 10.

FOR FURTHER INFORMATION CONTACT: Barbara Bullman, Esq., Division of Policy and Education, Office of Research Integrity, Rockwall II, Suite 700, 5515 Security Lane, Rockville, Maryland 20852, (301) 443–5300 (This is not a toll-free number.)

SUPPLEMENTARY INFORMATION: The Office of the Assistant Secretary for Health (OASH), Office of Research Integrity (ORI), established a new system of records: 09–37–0021, ''Public Health Service Records Related to Inquiries and Investigations of Scientific Misconduct, HHS/OASH/ORI.'' This system consists of records related to current allegations, inquiries or investigations of scientific misconduct and/or to actions that PHS has taken in connection with such allegations, inquiries, investigations, or findings. Records in this system are retrieved by the name of the individual who is the subject of the inquiry or investigation.

ORI published the notification of the new Privacy Act system of records in the **Federal Register** on July 19, 1994. During the comment period, ORI received several responses from professional associations. In response to their concerns, ORI has revised the notice. The revisions address the comments while permitting the ORI to use the information in the system to fulfill its responsibility for responding to allegations of scientific misconduct in research supported by the PHS.

One of the commenters stated that ''ORI has neither the capability nor the jurisdiction'' to provide information to correct ''inaccuracies or misleading research results.'' In response to this comment, ORI changed the ''Purpose'' section of the notice to state its use of the records in the system of records more clearly. The fourth purpose originally stated ''to determine whether results of PHS-related research may be inaccurate * * *.'' now reads that the system of records is to be used to ''determine whether results of PHS related research are falsified, fabricated, plagiarized or misrepresented so that PHS can notify the scientific community or others who may rely on the results of those findings.''

The majority of the other objections to the system notice pertain to the routine uses in the notice. Specifically, the commenters were concerned that the system, as written, would allow for ''the premature release of information in the system which could seriously and irreparably undermine the careers of innocent scientists.'' In addition, there was concern that the new system of records may also result in inappropriate dissemination of information before there was a finding of misconduct.

In response to the above comments, ORI revised several of the routine uses. The revisions narrow the scope of the routine uses but preserve the ability of ORI to make disclosures where there is a public need while protecting the interest of those who have not yet been found to have committed scientific misconduct.

Several commenters raised concern about routine use 4 which allowed release to ''other Federal Agencies who have supported, are supporting or are considering support of a research grant, fellowship, cooperative agreement or

contract with an affected individual or institution''. The commenters believed that this routine use was inconsistent with the current PHS ALERT which was modified to preclude disclosure to other Agencies until there was a finding of misconduct. In response to these concerns and without compromising the ability of the ORI to conduct thorough oversight and investigation activities ORI has modified routine use 4 by adding ''after there is an institutional or agency finding of misconduct.''

ORI modified the fifth routine use which allows ORI to disclose information to ''any person able to provide information in an inquiry, investigation or related proceeding, including the relevant PHS-supported institution(s), Federal, State and local agencies, and the person(s) making the allegation, provided however, that in each case HHS determines that such disclosure is necessary.'' ORI still retains the discretion to disclose information to persons making the allegations. This routine use is necessary for ORI to effectively interview witnesses in order to learn necessary information for the purpose of conducting a fair and objective inquiry and investigation. This routine use is similar to those used by other investigative units within the Federal Government. For example, routine use 5 is similar to the routine use in the National Science Foundation Privacy Act system of records, NSF–52, ''Office of Inspector General Investigative Files'', which allows the NSF to disclose information to nongovernmental parties where those parties may have information that the Office of the Inspector General (OIG) seeks to obtain in connection with an OIG investigation.

A commenter was concerned that there was the potential for premature disclosure of information to ''State licensing boards or certifying bodies.'' In response to this comment, ORI revised routine use 6 by adding a phrase that limits any disclosure until after there is a final agency finding of misconduct, thereby, eliminating any premature release. In addition, ORI added ''Upon request'' to routine use 6 which authorizes the release of information only after there is a request from the licensing board or certifying body for the information.

In response to the general concern that ORI was able to release information prematurely, ORI revised routine use 10. Routine use 10 now allows disclosure to professional journals, news media, other publications and to the public concerning misconduct findings and the need to correct falsified, fabricated, plagiarized, or otherwise misrepresented research results or reports only after there is a final agency finding of scientific misconduct or remedial actions have been imposed.

ORI modified routine use 7. Routine use 7 gives the ORI the discretion to disclose information to ''Institutional Review Boards, research-sponsoring institutions, individuals research subjects, and the public regarding information obtained or developed through the investigation that, in the PHS's judgment, may have implications for individual's health or for their participation in a research study.'' In addition, for the purpose of ensuring fairness to the parties, the same information that is released to the parties named above will be disclosed to the subject of the investigation.

We revised routine use 9 to address the concern that contractors were not held to the same standard as Federal employees regarding safeguards to be afforded the records.

Finally, a routine use that allowed public disclosure of records filed with or generated by the Departmental Appeals Board (DAB), HHS has been deleted as unnecessary since DAB records are open to the public.

In addition to revising the routine uses, ORI added the following introductory statement: ''Any disclosure pursuant to these routine uses will be limited to the minimum necessary to accomplish the purpose of the disclosure.'' This statement reinforces the ORI policy that ORI does not disclose any information that is not necessary in order to accomplish a fair and thorough inquiry and investigation or as a means to protect the public interest.

The ORI Privacy Act system notice is consistent with established ORI practice to protect the confidentiality of the ORI records where investigations are underway or individuals have been exonerated. ORI will continue to protect the privacy of individuals and defend the maintenance of confidentiality in its inquiries and investigations.

These revisions respond to the concerns about the release of information from the system while permitting the ORI to use that information to fulfill its responsibilities.

Dated: December 22, 1994.

Ellen Wormser,

Director, Office of Organization and Management Systems.

09–37–0021

SYSTEM NAME:

Public Health Service Records Related to Inquiries and Investigations of Scientific Misconduct, HHS/OASH/ORI.

SECURITY CLASSIFICATION:

None.

SYSTEM LOCATION(S):

For Intramural and Extramural Research Programs: Office of Research Integrity, Rockwall II, Suite 700, 5515 Security Lane, Rockville, Maryland 20852, and at offices for (1) each of the Agency Extramural Research Integrity Officers (AERIOs), (2) each of the Agency Research Integrity Liaison Officers (ARILOs), (3) each of the Agency Intramural Research Integrity Officers (AIRIOs) for those agencies covered by this notice; (4) each of the NIH Misconduct Program Offices and (5) the Federal Records Centers for inactive records.

CATEGORIES OF INDIVIDUALS COVERED BY THE SYSTEM:

Individuals who are the subject of allegation(s) of scientific misconduct or related matters. These categories include: (1) Researchers currently or formerly employed by the Federal Government, (2) guest researchers, (3) Advisory Committee members, and (4) investigators or applicants for research grants, research training grants, fellowships, cooperative agreements or contracts. Investigators may include principal investigators, co-investigators, program directors, trainees, recipients of career awards or fellowships, or other individuals who conduct or are responsible for research or research training funded by the PHS or who are the subject of applications for PHS funding.

CATEGORIES OF RECORDS IN THE SYSTEM:

This system contains records related to allegations, inquiries, investigations, findings of misconduct in science, or actions that PHS has taken in connection with such allegations, inquiries, investigations or findings. Scientific misconduct is defined as fabrication, falsification, plagiarism or other practices that seriously deviate from those that are commonly accepted within the scientific community for proposing, conducting or reporting research. It does not include honest error or honest differences in interpretations or judgements of data.

This system consists of records concerning or collateral to pending, ongoing or completed inquiries and investigations of alleged scientific misconduct. It includes information about the individuals under investigation or under an inquiry; the other PHS agencies or other federal agencies involved; the organization responsible for conducting the inquiry or investigation; the funding mechanism identification number(s) involved; names of individual involved; names of witnesses; general nature of the allegation; and the documentation used in the inquiry or investigation, including relevant research data and reagents, proposals, publications, copies of relevant publications by persons under investigation, qualification statements and curriculum vitae of expert consultants, correspondence, memoranda of telephone calls, summaries of interviews, social security numbers, interim and final reports prepared by the institution, Office of Research Integrity (ORI), Departmental Appeals Board (DAB) and other related data.

AUTHORITY FOR MAINTENANCE OF THE SYSTEM:

The authorities for maintaining the system are Sections 215(b), 301 and 493 of the Public Health Service Act; 42 U.S.C. 216(b), 241, and 289b; 5 U.S.C. 301, and 44 U.S.C. 3101, 42 CFR part 50, subpart A; 45 CFR part 76.

PURPOSE(S):

The purposes of this system are to (1) enable PHS agencies to discharge effectively their responsibilities in managing PHS intramural and extramural research programs and in the application, award, and administration of research and training awards, cooperative agreements and contracts while protecting the rights and privacy of the individuals under investigation and the confidentiality of information sources; (2) determine whether there has been scientific misconduct in PHS supported research; (3) assure the institutions applying for or receiving PHS funds have appropriate mechanisms for dealing with allegations of scientific misconduct and the protection of whistleblowers; (4) determine whether results or reports of PHS-related research are falsified, fabricated, misrepresented, or plagiarized so that PHS can notify the scientific community or others who may rely on the results; (5) serve as a working file and enable the ORI to inform PHS agency officials of the status and results of inquiries and investigations so that they may take actions appropriate to each case; (6) investigate allegations of misconduct and take appropriate remedial and corrective actions with respect to individuals who are found to have committed misconduct; and (7) ensure that inquiries and investigations are timely, thorough, complete and objective in accordance with applicable Federal regulations and procedures.

ROUTINE USES OF RECORDS MAINTAINED IN THE SYSTEM INCLUDING CATEGORIES OF USERS AND PURPOSES OF SUCH USES:

Any disclosure pursuant to these routine uses will be limited to the information necessary to accomplish the purpose of the disclosure:

1. To the Department of Justice, or to a court or other tribunal, when (a) the Department of Health and Human Services (HHS), or any component thereof; or (b) any HHS employee in his or her official capacity; or (c) any (HHS) employee in his or her individual capacity where the Department of Justice (or HHS, where it is authorized to do so) has agreed to represent the employee; or (d) the United States or any agency thereof where HHS determines that the litigation is likely to affect HHS or any of its components, is a party to litigation or has an interest in such litigation, and HHS determines that the use of such records by the Department of Justice, court or other tribunal is relevant and necessary to the litigation and would help in the effective representation of the government party, provided, however, that in each case HHS determines that such disclosure is compatible with the purpose for which the records were collected.

2. To qualified expert(s) for the purpose of obtaining the expert's assistance on matters pertinent to the inquiry, investigation, or related legal proceeding.

3. To responsible officials of the awardee institutions or organizations, when in connection with an inquiry, investigation or finding of misconduct by an individual previously or currently employed by or affiliated with the institution or organization, a PHS agency makes a finding or takes an action potentially affecting research and research training awards to the institution or organization.

4. To other Federal Agencies who have supported, are supporting or are considering support of a research grant, fellowship, cooperative agreement or contract with an affected individual or institution or which have utilized or relied on the relevant research to the extent that the record is relevant and necessary to the Agency's decision on the matter after there is an initial institutional or agency finding of misconduct.

5. To any person able to provide information in an inquiry, investigation or related proceeding, including the relevant PHS-supported institution(s), Federal, State and local agencies, and the person(s) making the allegation, provided however, that in each case HHS determines that such disclosure is necessary in order to conduct a thorough and fair investigation into allegations of scientific misconduct.

6. Upon request to a State licensing board or certifying body conducting a review of the individual to aid the board or body in meeting its responsibility to protect the health of the population in its jurisdiction or the integrity of the profession after there is an agency finding of misconduct or remedial actions have been imposed.

7. To Institutional Review Boards, research-sponsoring institutions, individual research subjects, and the public, regarding information obtained or developed through the investigation that, in PHS's judgement, may have implications for individuals' health or for their participation in a research study. The subject of the investigation will be provided with a copy of the information that is released.

8. When a record on its face, or in conjunction with other records, indicates a violation or potential violation of law, whether civil, criminal or regulatory in nature, and whether arising by general statute or particular program statute or by regulation, rule or order issued pursuant there to, disclosure may be made to the appropriate agency, whether Federal, foreign, state, local, or tribal, or other public authority responsible for enforcing investigating or prosecuting such violation or charged with enforcing or implementing the statute, or rule, or regulation, or order issued pursuant thereto, if the information disclosed is relevant to any enforcement, regulatory, investigative or prosecutive responsibility of the receiving entity.

9. To agency contractors who have been engaged by the agency to assist in the performance of a service related to this system of records and who need to have access to the records in order to perform the activity. Recipients shall be required to comply with the requirements of the Privacy Act of 1974.

10. To notify professional journals, news media, other publications and the public concerning misconduct findings and the need to correct falsified, fabricated, plagiarized or otherwise misrepresented research results or reports after there is a final agency finding of scientific misconduct or

remedial actions have been imposed. No information will be released that would reveal a confidential source.

11. To the General Services Administration (GSA), after there is a final agency action to debar, for the purpose of distributing and publishing that decision to debar.

POLICIES AND PRACTICES FOR STORING, RETRIEVING, ACCESSING, RETAINING, AND DISPOSING OF RECORDS IN THE SYSTEM:

STORAGE:

Records are stored in file folders and on computer discs.

RETRIEVABILITY:

Records are retrieved by name of the individual who is the subject of an allegation, inquiry or investigation.

SAFEGUARDS:

1. *Authorized users:* Extramural and intramural records in ORI are available to the system manager, to the Director, ORI, and to other appropriate ORI staff when they have a need to know. Records are available to the system manager, to the Deputy Director for Intramural Research, and to other appropriate HHS officials, including the Agency Research Integrity Liaison Officer (ARILOs), the Agency Intramural Research Integrity Officer (AIRIOs), and the Misconduct Program Officers (MPOs) located in the Bureaus, Centers, and Divisions of the NIH that are associated with the allegation, inquiry or investigation when there is a need to know in the performance of their duties.

2. *Procedural safeguards:* For records located in the ORI, access is strictly controlled by the system manager and the Director, ORI. For records located at the other sites, access is strictly controlled by the PHS Agency Heads, Deputy Director for Intramural Research, the ARILOs, the AIRIOs, AERIO, and MPOs and other appropriate PHS officials in their respective offices. HHS employees who receive disclosures from this system are informed that the information is confidential. All questions and inquiries from any party should be addressed to the system manager.

3. *Physical safeguards:* ORI records are kept in locked file cabinet in a room that is locked during non-working hours. Access to this room is restricted to specific personnel. The ORI office is protected by access and intrusion alarms at the front and emergency entrances. Access to computer files are protected through passwords and user-invisible encryption. Special measures commensurate with the sensitivity of the record are taken to prevent unauthorized copying or disclosure of the records. Records at other locations are protected from unauthorized access by PHS Agency heads, the Deputy Director Intramural Research, the AERIO's ARILOs, MPOs, or AIRIOs.

RETENTION AND DISPOSAL:

Allegation, inquiry and investigative files are retained and disposed of in accordance with the OASH Record Control Schedule.

SYSTEM MANAGER AND ADDRESS:

Director, Division of Research Investigations, Office of Research Integrity, Rockwall II, Suite 700, 5515 Security Lane, Rockville, Maryland 20852.

NOTIFICATION PROCEDURES:

This system is exempt from access; however, consideration will be given to requests addressed to the system manager. For general inquiries, state your name, the name of the institution, and the date of the award.

RECORD ACCESS PROCEDURE:

Same as notification procedures. Requestors should also reasonably specify the record contents being sought.

CONTESTING RECORD PROCEDURES:

Exempt. However, consideration will be given requests addressed to the system manager. Requests for corrections should reasonably identify the record and specify the information to be contested, the corrective action sought and the reasons for the corrections with supporting justification.

RECORD SOURCE CATEGORIES:

Information in this system is obtained: (1) Directly from the individual, (2) derived from materials supplied by the individual, (3) from information supplied by the institutions, informants, witnesses, and others, and (4) from existing government files.

SYSTEM EXEMPTED FROM CERTAIN PROVISIONS OF THE ACT:

This system is exempted under subsections (k)(2) and (k)(5) of the Privacy Act from access, notification, correction, and amendment provisions of the Privacy Act (5 U.S.C. 552a (c)(3), (d)(1)–(4), (e)(4)(G)–(H), and (f)).

[FR Doc. 95–329 Filed 1–5–95; 8:45 am]

BILLING CODE 4160–17–M

Agency Forms Submitted to the Office of Management and Budget for Clearance

Each Friday the Public Health Service (PHS) publishes a list of information collection requests it has submitted to the Office of Management and Budget (OMB) for clearance in compliance with the Paperwork Reduction Act (44 U.S.C. Chapter 35). The following requests have been submitted to OMB since the list was last published on Friday, December, 9, 1994.

(Call PHS Reports Clearance Officer on 202–690–7100 for copies of request).

1. Protection and Advocacy for Individuals with Mental Illness—45 CFR Part 51—NPRM—New—This proposed rule provides guidance to States regarding submission of annual reports on the activities of protection and advocacy programs, as required under section 10824 of the Protection and Advocacy of Individuals with Mental Illness Act. Annual reporting requirements and associated burden are currently approved under OMB control number 0930–0169. Respondents: State, local and tribal government, Not-for-profit institutions; Number of Respondents: 1; Number of Responses per Respondent: 1; Average Burden per Response: 1 hour; Estimated Annual Burden: 1 hour.

2. Data Collection and Reporting Requirements for Healthy Schools, Healthy Communities Program—New—Grantees funded under the Healthy Schools, Healthy Communities program will be required to report information on students who receive services, types of services, services utilization and health status. This information will be used to evaluate the impact of the program on program goals such as improving access to care. Respondents: Not-for-profit institutions.

Title	Number of respondents	Number of responses per respondent	Average burden per response (hours)
Data collection	27	477	.2 hr.

Title	Number of respondents	Number of responses per respondent	Average burden per response (hours)
Data reporting	27	6	.5 hr.

Estimated Total Annual Burden: 2,658 6 hours.

Lymphocyte Alternations in Pesticide Applicators Exposed to 2, 4-Dichlorophenoxyacetic Acid—New—Information an exposure to pesticides, alcohol, tobacco, and x-ray will be obtained by interviews from Kansas County Noxious Weed Department employees. The information plus biologic samples will be needed to assess possible mechanisms of 2,4-D, a suspected carcinogen. Respondents: Individuals or households, State local or tribal government; Numbers of Respondents: 130; Number of Responses Per Respondent: 7; Average Burden per Response: .21 hour; Estimated Annual Burden: 194 hours.

4. Individual National Research Service Award and Related Forms—0925–0002 (Revision)—The PHS 416–1 and PHS 416–9 are used by individuals to apply for direct research training support. Awards are made to individual applicants for specified training proposals in biomedical and behavioral research, selected as a result of a national competition. The other related forms are used by these individuals to activate, terminate, and provide for payback of a National Research Service Award. Respondents: Individuals of households, State or local governments, Businesses or other for-profit, Federal agencies or employees, Non-profit institutions, Small businesses or organizations.

Title	Number of respondents	Number of responses per respondent	Average burden per response (hours)
Initial Application [for Individual National Research Service Award]	3,356	1	20 hrs.
Application for Continuation [of an Individual National Research Service Award]	1,489	1	7 hrs.
Activation Notice	1,207	1	.0835 hr.
Termination Notice	7,937	1	.501 hr.
Payback Agreement	2,592	1	.0835 hr.
Annual Payback Activities Certification	17,000	1	.3334 hr.
Reference Letters	10,068	1	.7515 hr.

Estimated Total Annual Burden 95,080 hours.

Written comments and recommendations concerning the proposed information collections should be sent within 30 days of this notice directly to the OMB Desk Officer designated below at the following address:

Shannah Koss,

Human Resources and Housing Branch, New Executive Office Building, Room 10235, Washington, DC 20503.

Dated: January 3, 1995.

James Scanlon,

Director, Division of Data Policy, Office of Health Planning and Evaluation.

[FR Doc. 95–328 Filed 1–5–95; 8:45 am]

BILLING CODE 4160–17–M

Social Security Administration

Privacy Act of 1974 Report of New Routine Use

AGENCY: Social Security Administration (SSA), Department of Health and Human Services (HHS).

ACTION: New Routine Use.

SUMMARY: In accordance with the Privacy Act (5 U.S.C. 552a(e)(11)), we are issuing public notice of our intent to establish a new routine use of information maintained in the systems of records entitled ''Master Files of Social Security Number Holders, HHS/SSA/OSR, 09–60–0058,'' ''Master Beneficiary Record, HHS/SSA/OSR, 09–60–0090,'' and ''Supplemental Security Income Record, HHS/SSA/OSR, 09–60–0103.''

The proposed routine use will permit SSA to disclose to the public corrected data concerning the life status of individuals previously incorrectly identified as deceased on one or more of the systems of record cited above and made available to the public with information extracted from these systems through SSA's Death Master File (DMF). This is consistent with the requirements of the Privacy Act (5 U.S.C. 552a) to maintain all records with accuracy, relevance, timeliness, and completeness (5 U.S.C. 552a(e)(5)), and to establish safeguards to insure the integrity of records against substantial harm, embarrassment, inconvenience, or unfairness that might result to any individual on whom information is maintained (5 U.S.C. 552a(e)(10)).

We invite public comments on this publication.

DATES: The proposed routine use will become effective as proposed without further notice on January 23, 1995, unless we receive comments on or before that date which would warrant our preventing the routine use from taking effect.

ADDRESSES: Interested individuals may comment on this proposal by writing to the SSA Privacy Officer, Social Security Administration, 3–A–6 Operations Building, 6401 Security Boulevard, Baltimore, Maryland 21235. All comments received will be available for public inspection at the above address.

FOR FURTHER INFORMATION CONTACT: Mr. John Kattler, Social Insurance Specialist, 3–D–1 Operations Building, Standards and Compliance Branch, Office of Disclosure Policy, 6401 Security Boulevard, Baltimore, Maryland 21235, telephone 410–965–1738.

SUPPLEMENTARY INFORMATION:

I. Discussion of the Proposed Routine Use

SSA discloses information on deceased individuals in various SSA systems of records from a consolidated ''Death Master File'' (DMF), created to provide a means of servicing requests made under the Freedom of Information Act (5 U.S.C. 552) for a list of all deceased individuals in SSA records. The records of deceased individuals are

not protected from disclosure by the Privacy Act (20 CFR 401.350). The DMF contains the following information on each decedent, if the data are available to SSA:

Social Security Number
Last Name
First Name
Date of Death
Date of Birth
State/County Code of Residence
Zip Code—Last Residence
Zip Code—Lump Sum Payment

Occasionally, living individuals are erroneously included in the DMF (e.g., due to inaccurate death reports or inaccurate data input). DMF customers are warned that not all of the information is verified and SSA does not guarantee the accuracy of the DMF. Nonetheless, living individuals have complained to SSA that they were erroneously reported as deceased to DMF customers, such as insurance companies, financial institutions and credit agencies. This has resulted in insurance termination, denial of credit, embarrassment, inconvenience and other harm, both tangible and intangible to the individuals involved. The proposed routine use would allow SSA to routinely issue timely notices of correction to DMF customers if and when SSA corrects its own records. Such notices would not be dependent upon or require the consent of affected individuals.

II. Compatibility of the Proposed Routine Use

We are proposing this routine use in accordance with the Privacy Act (5 U.S.C. 552a(b)(3)) and our disclosure regulation (20 CFR part 401). We disclose information for routine uses where necessary to carry out SSA's programs. Inherent in this is the responsibility of maintaining the records for SSA's programs with accuracy, relevance, and timeliness and to ensure against harm and embarrassment to individuals resulting from any inaccuracies in SSA's records as required by 5 U.S.C. 552a(e) (5) and (10). We believe this responsibility for accuracy outweighs any concern that the correction of a record that was disclosed because it was incorrectly believed that the individual was deceased might constitute an improper disclosure concerning a living individual. The greater potential harm to the individual would result if the initial error were allowed to continue.

III. Effect of the Proposed Routine Use on Individuals

We will disclose information under the proposed routine use only to recipients of the DMF to correct erroneous inclusion of individuals in the DMF. The intention is to expedite notification of DMF corrections and to minimize any harm to affected individuals that might result from action of DMF recipients that is based on erroneous inclusion in the DMF (e.g., termination of insurance, denial of credit). We do not believe that the routine use will have any unwarranted effects on the rights or privacy interests of individuals.

IV. Minor Revisions to the System of Records

We are also correcting a few self-evident errors for purposes of accuracy.

Dated: December 6, 1994.

Shirley S. Chater,

Commissioner of Social Security.

09–60–0058

SYSTEM NAME:

Master Files of Social Security Number (SSN) Holders and SSN Applications, HHS/SSA/OSR.

SECURITY CLASSIFICATION:

None.

SYSTEM LOCATIONS:

Social Security Administration, Office of Systems Operations, 6401 Security Boulevard, Baltimore, MD 21235; Social Security Administration, Office of Central Records Operations, Metro West Building, 300 N. Greene Street, Baltimore, MD 21201.

Records may also be maintained at contractor sites (contact the system manager at the address below to obtain contractor addresses).

CATEGORIES OF INDIVIDUALS COVERED BY THE SYSTEM:

This system contains a record of each individual who has applied for and obtained an SSN and of each individual whose application was supported by documents which are suspected to be fraudulent and are being verified with the issuing agency, or have been determined to be fraudulent.

CATEGORIES OF RECORDS IN THE SYSTEM:

This system contains all of the information received on original applications for SSNs (e.g., name, date and place of birth, sex, both parents' names, and race/ethnic data), and any changes in the information on the applications that are submitted by the SSN holders. It also contains applications supported by evidence suspected or determined to be fraudulent, along with the mailing addresses of the individuals who filed such applications and descriptions of the documentation which they submitted. Cross-references may be noted where multiple numbers have been issued to the same individual and an indication may be shown that a benefit claim has been made under a particular SSN(s).

AUTHORITY FOR MAINTENANCE OF THE SYSTEM:

Sections 205(a) and 205(c)(2) of the Act.

PURPOSE(S):

Information in this system is used by SSA to assign SSNs. The information also is used for a number of administrative purposes, such as:

- By SSA components for various title II, XVI, and XVIII claims purposes including usage of the SSN itself as a case control number and a secondary beneficiary cross-reference control number for enforcement purposes and use of the SSN record data for verification of claimant identity factors and for other claims purposes related to establishing benefit entitlement;
- By SSA as a basic control for retained earnings information;
- By SSA as a basic control and data source to prevent issuance of multiple SSNs;
- As the means to identify reported names or SSNs on earnings reports;
- For resolution of earnings discrepancy cases;
- For statistical studies;
- By the HHS, Office of Inspector General, Office of Audit Services, for auditing benefit payments under Social Security programs;
- By the HHS OCSE for locating parents who owe child support;
- By the National Institute of Occupational Safety and Health for epidemiological research studies required by the Occupational Safety and Health Act of 1974;
- By the SSA Office of Refugee Resettlement for administering Cuban refugee assistance payments; and
- By the HHS HCFA for administering Title XVIII claims.

Information in this system is also used by SSA to prevent the processing of an SSN card application for an individual whose application is identified as having been supported by evidence that either:

- Is suspect and being verified, or
- Has been determined to be fraudulent.

With this system in place, clerical investigation and intervention is required. Social Security offices are alerted in case an applicant attempting to obtain an SSN might visit other offices and might attempt to find one which would unwittingly accept fraudulent documentation.

ROUTINE USES OF RECORDS MAINTAINED IN THE SYSTEM, INCLUDING CATEGORIES OF USERS AND THE PURPOSES OF SUCH USES:

Disclosure may be made for routine uses as indicated below:

1. Employers are notified of the SSNs of employees in order to complete their records for reporting wages to SSA pursuant to the FICA and section 218 of the Act.

2. To State welfare agencies, upon written request, of the SSNs of AFDC applicants or recipients.

3. To the DOJ, Federal Bureau of Investigation and United States Attorneys, for investigating and prosecuting violations of the Act.

4. To the DOJ, Immigration and Naturalization Service, for the identification and location of aliens in the United States pursuant to requests received under section 290(c) of the Immigration and Nationality Act (8 U.S.C. 1360(c)).

5. To a contractor for the purpose of collating, evaluating, analyzing, aggregating or otherwise refining records when SSA contracts with a private firm. (The contractor shall be required to maintain PA safeguards with respect to such records.)

6. To RRB for:

(a) Administering provisions of the Railroad Retirement and Social Security Acts relating to railroad employment; and

(b) Administering the Railroad Unemployment Insurance Act.

7. To the Department of Energy for its study of the long-term effects of low-level radiation exposure.

8. To the Department of the Treasury for:

(a) Tax administration as defined in section 6103 of the IRC (26 U.S.C. 6103); and

(b) Investigating the alleged theft, forgery, or unlawful negotiation of Social Security checks.

9. To a congressional office in response to an inquiry from the office made at the request of the subject of a record.

10. To the Department of State for administering the Act in foreign countries through facilities and services of that agency.

11. To the American Institute of Taiwan for administering the Act on Taiwan through facilities and services of that agency.

12. To VA, Philippines Regional Office, for administering the Act in the Philippines through facilities and services of that agency.

13. To the Department of the Interior for administering the Act in the Trust Territory of the Pacific Islands through facilities and services of that agency.

14. To the Department of Labor for:

(a) Administering provisions of the Black Lung Benefits Act; and

(b) Conducting studies of the effectiveness of training programs to combat poverty.

15. To DVA for the following purposes:

(a) For the purpose of validating SSNs of compensation recipients/pensioners in order to provide the release of accurate pension/compensation data by VA to SSA for Social Security program purposes; and

(b) Upon request, for purposes of determining eligibility for or amount of VA benefits, or verifying other information with respect thereto.

16. To Federal agencies which use the SSN as a numerical identifier in their recordkeeping systems, for the purpose of validating SSNs.

17. To the DOJ, to a court, to another tribunal, or to another party before such tribunal, when:

(a) SSA, or any component thereof; or

(b) Any SSA employee in his/her official capacity; or

(c) Any SSA employee in his/her individual capacity when DOJ (or SSA when it is authorized to do so) has agreed to represent the employee; or

(d) The United States or any agency thereof when SSA determines that the litigation is likely to affect the operations of SSA or any of its components

is a party to litigation or has an interest in such litigation, and SSA determines that the use of such records by DOJ, the tribunal, or other party before such tribunal is relevant and necessary to the litigation, provided, however, that in each case, SSA determines that such disclosure is compatible with the purpose for which the records were collected.

Wage and other information that is subject to disclosure provisions of the IRC will not be disclosed under this routine use unless disclosure is expressly permitted by the IRC.

18. To State audit agencies for auditing State supplementation payments and Medicaid eligibility considerations.

19. To the Social Security agency of a foreign country, to carry out the purpose of an international Social Security agreement entered into between the United States and the other country, pursuant to section 233 of the Act.

20. To Federal, State, or local agencies (or agents on their behalf) for the purpose of validating SSNs used in administering cash or noncash income maintenance programs or health maintenance programs (including programs under the Act).

21. To third party contacts when the party to be contacted has, or is expected to have, information which will verify documents when SSA is unable to determine if such documents are authentic.

22. Upon request, information on the identity and location of aliens may be disclosed to the DOJ, Criminal Division, Office of Special Investigations, for the purpose of detecting, investigating, and, when appropriate, taking legal action against suspected Nazi war criminals in the United States.

23. To the Selective Service System for the purpose of enforcing draft registration pursuant to the provisions of the Military Selective Service Act (50 U.S.C. App. 462, as amended by section 916 of Pub. L. 97–86).

24. To contractors and other Federal agencies, as necessary, for the purpose of assisting SSA in the efficient administration of its programs. We contemplate disclosing information under this routine use only in situations in which SSA may enter into a contractual or similar agreement with a third party to assist in accomplishing an agency function relating to this system of records.

25. Validated SSN information may be disclosed to organizations or agencies such as prison systems that are required by law to furnish SSA with SSN information.

26. Nontax return information that is not restricted from disclosure by Federal law may be disclosed to GSA and NARA for the purpose of conducting records management studies with respect to their duties and responsibilities under 44 U.S.C. 2904 and 2906, as amended by the NARA Act of 1984.

27. Disclosure of SSNs and dates of birth may be made to VA or third parties under contract to that agency for the purpose of conducting DVA medical research and epidemiological studies.

28. SSN information may be disclosed to OPM upon receipt of a request from that agency in accordance with 5 U.S.C. 8347(m)(3), when OPM needs the information in administering its pension program for retired Federal Civil Service employees.

29. Upon request by the Department of Education, SSNs which are provided by students to postsecondary educational institutions may be verified as required by Title IV of the Higher Education Act of 1965 (20 U.S.C. 1091).

30. To student volunteers and other workers, who technically do not have the status of Federal employees, when they are performing work for SSA as authorized by law, and they need access

to personally identifiable information in SSA records in order to perform their assigned Agency functions.

31. To Federal, State, and local law enforcement agencies and private security contractors, as appropriate, information necessary;

(a) To enable them to protect the safety of SSA employees and customers, the security of the SSA workplace and the operation of SSA facilities, or

(b) To assist investigations or prosecutions with respect to activities that affect such safety and security or activities that disrupt the operation of SSA facilities.

32. Corrections to information that resulted in erroneous inclusion of individuals in the Death Master File (DMF) may be disclosed to recipients of erroneous DMF information.

POLICIES AND PRACTICES FOR STORING, RETRIEVING, ACCESSING, RETAINING, AND DISPOSING OF RECORDS IN THE SYSTEM:

STORAGE:

Records in this system are maintained in paper form (e.g., paper lists, punch cards, Forms SS–5 (Application for an SSN), and systems generated forms); magnetic media (e.g., magnetic tape and disc with on-line access); and in microfilm and microfiche form.

RETRIEVABILITY:

Records of SSN holders are indexed by both SSN and name. Records of applications that have been denied because the applicant submitted fraudulent evidence, or that are being verified because the evidence is suspected to be fraudulent, are indexed either by the applicant's name plus month and year of birth, or by the applicant's name plus the eleven-digit reference number of the disallowed application.

SAFEGUARDS:

Safeguards for automated records have been established in accordance with the Systems Security Handbook. This includes maintaining the magnetic tapes and discs within a secured enclosure attended by security guards. Anyone entering or leaving this enclosure must have a special badge issued only to authorized personnel.

For computerized records electronically transmitted between CO and FO locations (including organizations administering SSA programs under contractual agreements), safeguards include a lock/unlock password system, exclusive use of leased telephone lines, a terminal-oriented transaction matrix, and an audit trail. All microfilm, microfiche, and paper files are accessible only by authorized personnel who have a need for the records in the performance of their official duties.

Expansion and improvement of SSA's telecommunications systems has resulted in the acquisition of terminals equipped with physical key locks. The terminals also are fitted with adapters to permit the future installation of data encryption devices and devices to permit the identification of terminal users.

RETENTION AND DISPOSAL:

All paper forms are retained for 5 years after they have been filmed or entered on tape and the accuracy has been verified. They then are destroyed by shredding. All tape, discs, microfilm, and microfiche files are updated periodically. Out-of-date magnetic tapes and discs are erased. Out-of-date microfiches are disposed of by applying heat.

SYSTEM MANAGER AND ADDRESS:

Director, Division of Data Support and Enumeration, Office of Systems Requirements, Social Security Administration, 6401 Security Boulevard, Baltimore, MD 21235.

NOTIFICATION PROCEDURES:

An individual can determine if this system contains a record pertaining to him/her by providing his/her name, signature, and SSN to the address shown under ''System Manager'' above. (Furnishing the SSN is voluntary, but it makes searching for an individual's record easier and avoids delay.) If the SSN is unknown or no SSN has been assigned because the evidence presented with the application is being verified or has been determined to be fraudulent, the individual should provide name, signature, date and place of birth, sex, mother's birth name, and father's name, and evidence of identity. These procedures are in accordance with HHS Regulations, 45 CFR part 5b.

RECORD ACCESS PROCEDURES:

Same as notification procedures. Also, requesters should reasonably specify the record contents which they are seeking. These procedures are in accordance with HHS Regulations, 45 CFR part 5b.

CONTESTING RECORD PROCEDURES:

Same as notification procedures above. Also, requesters should reasonably identify the record, specify the information which they are contesting, and state the corrective action sought and the reasons for the correction, with supporting justification showing how the record is incomplete, untimely, inaccurate, or irrelevant. These procedures are in accordance with HHS Regulations, 45 CFR part 5b.

RECORD SOURCE CATEGORIES:

Information in this system is obtained from SSN applicants (or individuals acting on their behalf). The SSN itself is assigned to the individual as a result of internal processes of this system.

SYSTEM EXEMPTIONS FROM CERTAIN PROVISIONS OF THE ACT:

None.

09–60–0090

SYSTEM NAME:

Master Beneficiary Record (MBR), HHS/SSA/OSR.

SECURITY CLASSIFICATION:

None.

SYSTEM LOCATION:

Social Security Administration, Office of System Operations, 6401 Security Boulevard, Baltimore, MD 21235.

CATEGORIES OF INDIVIDUALS COVERED BY THE SYSTEM:

All Social Security beneficiaries who are or were entitled to receive Retirement and Survivors Insurance (RSI), or Disability Insurance (DI) benefits, including individuals who have received a RSI or DI payment since November 1978 even if their payment is not part of an ongoing award of benefits; individuals (nonclaimants) on whose earnings records former spouses apply for RSI or DI benefits; persons who are only enrolled in the Hospital and/or Supplementary Medical Insurance (SMI) programs; and claimants whose benefits have been denied or disallowed.

The system also contains short references to records for persons entitled to Supplemental Security Income payments, Black Lung benefits or Railroad Retirement Board (RRB) benefits.

CATEGORIES OF RECORDS IN THE SYSTEM:

The MBR contains information about each claimant who has applied for RSI or DI benefits, or to be enrolled in the Hospital or SMI programs; a record of the amount of Federal tax withheld on benefits paid to nonresident aliens; and the aggregate amount of benefit payments, repayments and reductions with respect to an individual in a calendar year. A record is maintained under each individual's Social Security Number (SSN). However, if the individual has filed on another person's SSN, only a short ''pointer'' record is maintained. Personal and general data about the claim is maintained under the SSN of that claim. Data about the claimant can be accessed using the

claimant's SSN or the SSN on which benefits have been awarded or claimed (claim account number (CAN)).

There are three types of data in each CAN:

Account data. This includes the primary insurance amount, insured status of the SSN-holder (if no monthly benefits are payable), data relating to the computation (use of military service credits, railroad retirement credits, or coverage credits earned under the social security system of a foreign country when the claim is based on a totalization agreement), and, if only survivor's benefits have been paid, identifying data about the SSN holder (full name, date of birth, date of death and verification of date of death).

Payment data. This includes the payee's name and address, data about a financial institution (if benefits are sent directly to the institution for deposit), the monthly payment amount, the amount and date of a one-time payment of past due benefits, and, where appropriate, a scheduled future payment. Payment data can refer to one beneficiary or several beneficiaries in a combined payment.

Beneficiary data. This includes personal information (name, date of birth, sex, date of filing, relationship to the SSN holder, other SSN's, benefit amount and payment status), and, if applicable, information about a representative payee, data about disability entitlement, worker's compensation offset data, estimates and report of earnings, or student entitlement information.

AUTHORITY FOR MAINTENANCE OF THE SYSTEM:

Sections 202–205, 223, 226, 228, 1818, 1836, and 1840 of the Social Security Act (the Act).

PURPOSE(S):

Data in this system are used by a broad range of Social Security employees for responding to inquiries, generating followups on beneficiary reporting events, computer exception processing, statistical studies, conversion of benefits, and generating records for the Department of the Treasury to pay the correct benefit amount.

Data in this system also are available to the Department of Health and Human Services' (HHS') Office of Inspector General for use in the performance of the duties of that office.

ROUTINE USES OF RECORDS MAINTAINED IN THE SYSTEM, INCLUDING CATEGORIES OF USERS AND THE PURPOSES OF SUCH USES:

Disclosure may be made for routine uses as indicated below:

1. To applicants or claimants, prospective applicants or claimants (other than the data subject), their authorized representatives or representative payees to the extent necessary to pursue Social Security claims and to representative payees, when the information pertains to individuals for whom they serve as representative payees, for the purpose of assisting SSA in administering its representative payment responsibilities under the Act and assisting the representative payees in performing their duties as payees, including receiving and accounting for benefits for individuals for whom they serve as payees.

2. To third party contacts in situations where the party to be contacted has, or is expected to have, information relating to the individual's capability to manage his/her affairs or his/her eligibility for, or entitlement to, benefits under the Social Security program when:

(a) The individual is unable to provide information being sought. An individual is considered to be unable to provide certain types of information when:

(1) He/she is incapable or of questionable mental capability;

(2) He/she cannot read or write;

(3) He/she cannot afford the cost of obtaining the information;

(4) He/she has a hearing impairment, and is contacting SSA by telephone through a telecommunications relay system operator;

(5) A language barrier exists; or

(6) The custodian of the information will not, as a matter of policy, provide it to the individual; or

(b) The data are needed to establish the validity of evidence or to verify the accuracy of information presented by the individual, and it concerns one or more of the following:

(1) His/her eligibility for benefits under the Social Security program;

(2) The amount of his/her benefit payment; or

(3) Any case in which the evidence is being reviewed as a result of suspected fraud, concern for program integrity, quality appraisal, or evaluation and measurement activities.

3. To third party contacts where necessary to establish or verify information provided by representative payees or payee applicants.

4. To a person (or persons) on the rolls when a claim is filed by another individual which is adverse to the person on the rolls:

(a) An award of benefits to a new claimant precludes an award to a prior claimant; or

(b) An award of benefits to a new claimant will reduce the benefit payments to the individual(s) on the rolls; but only for information concerning the facts relevant to the interests of each party in a claim.

5. To the Department of the Treasury for:

(a) Collecting Social Security taxes or as otherwise pertinent to tax and benefit payment provisions of the Act (including SSN verification services);

(b) Investigating the alleged theft, forgery, or unlawful negotiation of Social Security checks;

(c) Determining the Federal tax liability on Social Security benefits pursuant to 26 U.S.C. 6050F. The information disclosed will consist of the following:

(1) The aggregate amount of Social Security benefits paid with respect to any individual during any calendar year;

(2) The aggregate amount of Social Security benefits repaid by such individual during such calendar year;

(3) The aggregate reductions under section 224 of the Act in benefits which would otherwise have been paid to such individual during the calendar year on account of amounts received under a worker's compensation act; and

(4) The name and address of such individual; and

(d) Depositing the tax withheld on benefits paid to nonresident aliens in the Treasury (Social Security Trust Funds) pursuant to 26 U.S.C. 871.

6. To the United States Postal Service for investigating the alleged theft or forgery of Social Security checks.

7. To the Department of Justice (DOJ) for:

(a) Investigating and prosecuting violations of the Act to which criminal penalties attach;

(b) Representing the Secretary of HHS; and

(c) Investigating issues of fraud by agency officers or employees, or violation of civil rights.

8. To the Department of State for administering the Act in foreign countries through services and facilities of that agency.

9. To the American Institute of Taiwan for administering the Act in Taiwan through services and facilities of that agency.

10. To the Department of Veterans Affairs (DVA), Philippines Regional Office, for administering the Act in the Philippines through the services and facilities of that agency.

11. To the Department of Interior for administering the Act in the Trust Territory of the Pacific Islands through services and facilities of that agency.

12. Information necessary to adjudicate claims filed under an

international Social Security agreement that the United States has entered into pursuant to section 233 of the Act may be disclosed to a foreign country which is a party to that agreement.

13. To the Office of the President for the purpose of responding to an individual pursuant to an inquiry received from that individual or from a third party on his/her behalf.

14. To the Department of Education for determining eligibility of applicants for basic educational opportunity grants.

15. To the Bureau of the Census when it performs as a collecting agent or data processor for research and statistical purposes directly relating to this system of records.

16. To the Department of the Treasury, Office of Tax Analysis, for studying the effects of income taxes and taxes on earnings.

17. To the Office of Personnel Management for the study of the relationship of civil service annuities to minimum Social Security benefits, and the effects on the Social Security Trust Fund.

18. To State Social Security Administrators for administering agreements pursuant to section 218 of the Act.

19. To the Department of Energy for its study of the long- term effects of low-level radiation exposure.

20. To contractors under contract to the Social Security Administration (SSA) (or under contract to another agency with funds provided by SSA) for the performance of research and statistical activities directly relating to this system of records.

21. To a congressional office in response to an inquiry from that office made at the request of the subject of a record.

22. To the Department of Labor for conducting statistical studies of the relationship of private pensions and Social Security benefits to prior earnings.

23. In response to legal process or interrogatories relating to the enforcement of an individual's child support or alimony obligations, as required by sections 459 and 461 of the Act.

24. To Federal, State, or local agencies (or agents on their behalf) for administering income maintenance or health maintenance programs (including programs under the Act). Such disclosures include, but are not limited to, release of information to:

(a) RRB for administering provisions of the Railroad Retirement Act relating to railroad employment; for administering the Railroad Unemployment Insurance Act and for administering provisions of the Social Security Act relating to railroad employment;

(b) DVA for administering 38 U.S.C. 412, and upon request, for determining eligibility for, or amount of, veterans benefits or verifying other information with respect thereto;

(c) State welfare departments for administering sections 205(c)(2)(B)(i)(II) and 402(a)(25) of the Act requiring information about assigned SSN's for Aid to Families with Dependent Children (AFDC) program purposes and for determining a recipient's eligibility under the AFDC program; and

(d) State agencies for administering the Medicaid program.

25. Upon request, information on the identity and location of aliens may be disclosed to DOJ (Criminal Division, Office of Special Investigations) for the purpose of detecting, investigating and, when appropriate, taking legal action against suspected Nazi war criminals in the United States.

26. To third party contacts (including private collection agencies under contract with SSA) for the purpose of their assisting SSA in recovering overpayments.

27. Information may be disclosed to contractors and other Federal agencies, as necessary, for the purpose of assisting SSA in the efficient administration of its programs. We contemplate disclosing information under the routine use only in situations in which SSA may enter into a contractual or similar agreement with a third party to assist in accomplishing an agency function relating to this system of records.

28. Nontax return information which is not restricted from disclosure by Federal law may be disclosed to the General Services Administration and the National Archives and Records Administration for the purpose of conducting records management studies with respect to their duties and responsibilities under 44 U.S.C. 2904 and 2906.

29. Information may be disclosed to the Federal Reserve Bank of New York for the purpose of making direct deposit/electronic funds transfer of Social Security benefits to foreign-resident beneficiaries.

30. To DOJ, a court or other tribunal, or another party before such tribunal when:

(a) SSA, any component thereof, or

(b) Any SSA employee in his/her official capacity; or

(c) Any SSA employee in his/her individual capacity where DOJ (or SSA where it is authorized to do so) has agreed to represent the employee; or

(d) the United States or any agency thereof where SSA determines that the litigation is likely to affect the operations of SSA or any of its components,

is a party to litigation or has an interest in such litigation, and SSA determines that the use of such records by DOJ, the court or other tribunal is relevant and necessary to the litigation, provided, however, that in each case, SSA determines that such disclosure is compatible with the purpose for which the records were collected.

Wage and other information which are subject to the disclosure provisions of the Internal Revenue Code (IRC) (26 U.S.C. 6103) will not be disclosed under this routine use unless disclosure is expressly permitted by the IRC.

31. To the Rehabilitation Services Administration (RSA) for use in its program studies of, and development of enhancements for, State vocational rehabilitation programs. These are programs to which applicants or beneficiaries under titles II and or XVI of the Act may be referred. Data released to RSA will not include any personally identifying information (such as names or SSNs).

32. Addresses of beneficiaries who are obligated on loans held by the Secretary of Education or a loan made in accordance with 20 U.S.C. 1071, *et seq.* (the Robert T. Stafford Student Loan Program) may be disclosed to the Department of Education as authorized by section 489A of the Higher Education Act of 1965.

33. To student volunteers and other workers, who technically do not have the status of Federal employees, when they are performing work for SSA as authorized by law, and they need access to personally identifiable information in SSA records in order to perform their assigned Agency functions.

34. To Federal, State, and local law enforcement agencies and private security contractors, as appropriate, information necessary

(a) To enable them to protect the safety of SSA employees and customers, the security of the SSA workplace and the operation of SSA facilities, or

(b) To assist investigations or prosecutions with respect to activities that affect such safety and security or activities that disrupt the operation of SSA facilities.

35. Corrections to information that resulted in erroneous inclusion of individuals in the Death Master File (DMF) may be disclosed to recipients of the erroneous DMF information.

POLICIES AND PRACTICES FOR STORING, RETRIEVING, ACCESSING, RETAINING AND DISPOSING OF RECORDS IN THE SYSTEM:

STORAGE:

Records are stored in magnetic media (e.g., magnetic tape and magnetic disc) and in microform and paper form.

RETRIEVABILITY:

Records in this system are indexed and retrieved by SSN.

SAFEGUARDS:

Safeguards for automated records have been established in accordance with the HHS Information Resources Management Manual, ''Part 6, Automated Information Systems Security Program Handbook.'' All magnetic tapes and discs are within an enclosure attended by security guards. Anyone entering or leaving this enclosure must have special badges which are issued only to authorized personnel. All microform and paper files are accessible only by authorized personnel and are locked after working hours.

For computerized records, electronically transmitted between SSA's central office and field office locations (including organizations administering SSA programs under contractual agreements), safeguards include a lock/unlock password system, exclusive use of leased telephone lines, a terminal oriented transaction matrix, and an audit trail.

RETENTION AND DISPOSAL:

Primary data storage is on magnetic disc. A new version of the disk file is generated each month based on changes to the beneficiary's record (adjustment in benefit amount, termination, or new entitlements). The prior version is written to tape and retained for 90 days in SSA's main data processing facility and is then sent to a secured storage facility for indefinite retention.

Selected records also are retained on magnetic disc for on-line query purposes. The query files are updated monthly and retained indefinitely. Microform records are disposed of by shredding or the application of heat after periodic replacement of a complete file.

Paper records are usually destroyed after use, by shredding, except where needed for documentation of the claims folder. (See the notice for the Claims Folders System (09–60–0089) for retention periods and method of disposal for these records).

SYSTEM MANAGER AND ADDRESS:

Director, Office of Claims and Payment Requirements, Office of System Requirements, Social Security Administration, 6401 Security Boulevard, Baltimore, MD 21235.

NOTIFICATION PROCEDURE:

An individual can determine if this system contains a record about him/her by contacting the most convenient Social Security field office and providing his/her name, Social Security claim number (SSN plus alphabetic symbols), address, and proper identification. (Furnishing the SSN is voluntary, but it will make searching for an individual's record easier and prevent delay.)

An individual requesting notification of records in person need not furnish any special documents of identity. Documents he/she would normally carry on his/her person would be sufficient (e.g., credit cards, driver's license, or voter registration card). An individual requesting notification via mail or telephone must furnish a minimum of his/her name, date of birth and address in order to establish identity, plus any additional information specified in this section.

These procedures are in accordance with HHS Regulations 45 CFR part 5b.

RECORD ACCESS PROCEDURES:

Same as notification procedures. Requesters should also reasonably specify the record contents being sought. These procedures are in accordance with HHS Regulations 45 CFR part 5b.

CONTESTING RECORD PROCEDURES:

Same as notification procedures. Requesters should also reasonably identify the record, specify the information they are contesting and state the corrective action sought and the reasons for the correction with supporting justification showing how the record is untimely, incomplete, inaccurate or irrelevant. These procedures are in accordance with HHS Regulations 45 CFR part 5b.

RECORD SOURCE CATEGORIES:

Data for the MBR come primarily from the Claims Folders System (09–60–0089) and/or are furnished by the claimant/beneficiary at the time of filing for benefits, via the application form and necessary proofs, and during the period of entitlement when notices of events such as changes of address, work, marriage, are given to SSA by the beneficiary; and from States regarding HI third party premium payment/buy-in cases.

SYSTEMS EXEMPTED FROM CERTAIN PROVISIONS OF THE ACT:

None.

SYSTEM NAME:

Supplemental Security Income Record, HHS/SSA/OSR.

SECURITY CLASSIFICATION:

None.

SYSTEM LOCATION:

Social Security Administration, Office of Systems Operations, 6401 Security Boulevard, Baltimore, MD 21235.

Records also may be located in Social Security Administration (SSA) Regional and field offices (individuals should consult their local telephone directories for address information).

CATEGORIES OF INDIVIDUALS COVERED BY THE SYSTEM:

This file contains a record for each individual who has applied for supplemental security income (SSI) payments, including individuals who have requested an advance payment; SSI recipients who have been overpaid; and each essential person associated with an SSI recipient.

CATEGORIES OF RECORDS IN THE SYSTEM:

This file contains data regarding SSI eligibility; citizenship; residence; Medicaid eligibility; eligibility for other benefits; alcoholism or drug addiction data, if applicable (disclosure of this information may be restricted by 21 U.S.C. 1175 and 42 U.S.C. 290dd–3 and ee–3); income data; resources; payment amounts, including overpayment amounts and date and amount of advance payments; living arrangements; case folder location data; appellate decisions, if applicable; Social Security numbers (SSN's) used to identify a particular individual, if applicable; information about representative payees, if applicable; and a history of changes to any of the persons who have applied for SSI payments. For eligible individuals, the file contains basic identifying information, income and resources (if any) and, in conversion cases, the State welfare number.

AUTHORITY FOR MAINTENANCE OF THE SYSTEM:

Sections 1602, 1611, 1612, 1613, 1614, 1615, 1616, 1631, 1633, and 1634 of title XVI of the Social Security Act (the Act).

PURPOSE(S):

SSI records begin in Social Security field offices where an individual or couple files an application for SSI payments. The application contains data which may be used to prove the identity of the applicant, to determine his/her eligibility for SSI payments and, in cases where eligibility is determined, to compute the amount of the payment. Information from the application, in

addition to data used internally to control and process SSI cases, is used to create the SSR. The SSR also is used as a means of providing a historical record of all activity on a particular individual's or couple's record.

In addition, statistical data are derived from the SSR for actuarial and management information purposes.

ROUTINE USES OF RECORDS MAINTAINED IN THE SYSTEM, INCLUDING CATEGORIES OF USERS AND THE PURPOSES OF SUCH USES:

Disclosure may be made for routine uses as indicated below:

1. To the Department of the Treasury to prepare SSI and Energy Assistance checks.

2. To the States to establish the minimum income level for computation of State supplements.

3. To the following Federal and State agencies to prepare information for verification of benefit eligibility under section 1631(e) of the Act: Bureau of Indian Affairs; Office of Personnel Management; Department of Agriculture; Department of Labor; Immigration and Naturalization Service; Internal Revenue Service (IRS); Railroad Retirement Board (RRB); State Pension Funds; State Welfare Offices; State Worker's Compensation; Department of Defense; United States Coast Guard; and the Department of Veterans Affairs (DVA).

4. To a congressional office in response to an inquiry from that office made at the request of the subject of a record.

5. To State crippled children's agencies (or other agencies providing services to disabled children) to identify title XVI eligibles under the age of 16 for the consideration of rehabilitation services in accordance with section 1615 of the Act.

6. To contractors under contract to SSA or under contract to another agency with funds provided by SSA for the performance of research and statistical activities directly relating to this system of records.

7. To State audit agencies for auditing State supplementation payments and Medicaid eligibility consideration.

8. To State agencies to effect and report the fact of Medicaid eligibility of title XVI recipients in the jurisdiction of those States which have elected Federal determinations of Medicaid eligibility of title XVI eligibles and to assist the States in administering the Medicaid program.

9. To State agencies to identify title XVI eligibles in the jurisdiction of those States which have not elected Federal determinations of Medicaid eligibility in order to assist those States in establishing and maintaining Medicaid rolls and in administering the Medicaid program.

10. To State agencies to enable those which have elected Federal administration of their supplementation programs to monitor changes in applicant/recipient income, special needs, and circumstances.

11. To State agencies to enable those which have elected to administer their own supplementation programs to identify SSI eligibles in order to determine the amount of their monthly supplementary payments.

12. To State agencies to enable them to assist in the effective and efficient administration of the SSI program.

13. To State agencies to enable those which have an agreement with the Secretary of Health and Human Services (HHS) to carry out their functions with respect to Interim Assistance Reimbursement pursuant to section 1631(g) of the Act.

14. To State agencies to enable them to locate potentially eligible individuals and to make eligibility determinations for extensions of social services under the provisions of title XX of the Act.

15. To State agencies to assist them in determining initial and continuing eligibility in their income maintenance programs and for investigating and prosecution of conduct subject to criminal sanctions under these programs.

16. To the United States Postal Service for investigating the alleged theft, forgery or unlawful negotiation of SSI checks.

17. To the Department of the Treasury for investigating the alleged theft, forgery or unlawful negotiation of SSI checks.

18. To the Department of Education for determining the eligibility of applicants for Basic Educational Opportunity Grants.

19. To Federal, State or local agencies (or agents on their behalf) for administering cash or noncash income maintenance or health maintenance programs (including programs under the Act). Such disclosures include, but are not limited to, release of information to:

(a) The DVA upon request for determining eligibility for, or amount of, VA benefits or verifying other information with respect thereto;

(b) The RRB for administering the Railroad Unemployment Insurance Act;

(c) State agencies to determine eligibility for Medicaid;

(d) State agencies to locate potentially eligible individuals and to make determinations of eligibility for the food stamp program; and

(e) State agencies to administer energy assistance to low income groups under programs for which the States are responsible.

20. To IRS, Department of the Treasury, as necessary, for the purpose of auditing SSA's compliance with safeguard provisions of the Internal Revenue Code of 1986, as amended.

21. To the Office of the President for the purpose of responding to an individual pursuant to an inquiry received from that individual or a third party on his/her behalf.

22. Upon request, information on the identity and location of aliens may be disclosed to the DOJ (Criminal Division, Office of Special Investigations) for the purpose of detecting, investigating and, when appropriate, taking legal action against suspected Nazi war criminals in the United States.

23. To third party contacts (including private collection agencies under contract with SSA) for the purpose of their assisting SSA in recovering overpayments.

24. Information may be disclosed to contractors and other Federal agencies, as necessary, for the purpose of assisting SSA in the efficient administration of its programs. We contemplate disclosing information under this routine use only in situations in which SSA may enter a contractual or similar agreement with a third party to assist in accomplishing an agency function relating to this system of records.

25. Nontax return information which is not restricted from disclosure by Federal law may be disclosed to the General Services Administration and the National Archives and Records Administration for the purpose of conducting records management studies with respect to their duties and responsibilities under 44 U.S.C. 2904 and 2906.

26. To the DOJ, a court or other tribunal, or another party before such tribunal when:

(a) SSA, any component thereof, or

(b) Any SSA employee in his/her official capacity; or

(c) Any SSA employee in his/her individual capacity where DOJ (or SSA where it is authorized to do so) has agreed to represent the employee; or

(d) The United States or any agency thereof where SSA determines that the litigation is likely to affect the operations of SSA or any of its components,

is a party to litigation or has an interest in such litigation, and SSA determines that the use of such records by DOJ, the court, or other tribunal, is relevant and necessary to the litigation, provided, however, that in each case, SSA determines that such disclosure is

compatible with the purpose for which the records were collected.

Wage and other information which are subject to the disclosure provisions of the Internal Revenue Code (IRC) (26 U.S.C. 6103) will not be disclosed under this routine use unless disclosure is expressly permitted by the IRC.

27. To representative payees, when the information pertains to individuals for whom they serve as representative payees, for the purpose of assisting SSA in administering its representative payment responsibilities under the Act and assisting the representative payees in performing their duties as payees, including receiving and accounting for benefits for individuals for whom they serve as payees.

28. To third party contacts in situations where the party to be contacted has, or is expected to have, information relating to the individual's capability to manage his/her affairs or his/her eligibility for, or entitlement to, benefits under the Social Security program when:

(a) The individual is unable to provide information being sought. An individual is considered to be unable to provide certain types of information when:

(1) He/she is incapable or of questionable mental capability;

(2) He/she cannot read or write;

(3) He/she cannot afford the cost of obtaining the information;

(4) He/she has a hearing impairment, and is contacting SSA by telephone through a telecommunications relay system operator;

(5) A language barrier exists; or

(6) The custodian of the information will not, as a matter of policy, provide it to the individual; or

(b) The data are needed to establish the validity of evidence or to verify the accuracy of information presented by the individual, and it concerns one or more of the following:

(1) His/her eligibility for benefits under the Social Security program;

(2) The amount of his/her benefit payment; or

(3) Any case in which the evidence is being reviewed as a result of suspected fraud, concern for program integrity, quality appraisal, or evaluation and measurement activities.

29. To the Rehabilitation Services Administration (RSA) for use in its program studies of, and development of enhancements for, State vocational rehabilitation programs. These are programs to which applicants or beneficiaries under titles II and or XVI of the Act may be referred. Data released to RSA will not include any personally identifying information (such as names or SSNs).

30. Addresses of beneficiaries who are obligated on loans held by the Secretary of Education or a loan made in accordance with 20 USC 1071, *et seq.* (the Robert T. Stafford Student Loan Program) may be disclosed to the Department of Education as authorized by section 489A of the Higher Education Act of 1965.

31. To student volunteers and other workers, who technically do not have the status of Federal employees, when they are performing work for SSA as authorized by law, and they need access to personally identifiable information in SSA records in order to perform their assigned Agency functions.

32. To Federal, State, and local law enforcement agencies and private security contractors, as appropriate, information necessary

(a) To enable them to protect the safety of SSA employees and customers, the security of the SSA workplace and the operation of SSA facilities, or

(b) To assist investigations or prosecutions with respect to activities that affect such safety and security or activities that disrupt the operation of SSA facilities.

33. Corrections to information that resulted in erroneous inclusion of individuals in the Death Master File (DMF) may be disclosed to recipients of the erroneous DMF information.

POLICIES AND PRACTICES FOR STORING, RETRIEVING, ACCESSING, RETAINING AND DISPOSING OF RECORDS IN THE SYSTEM:

STORAGE:

Records are maintained in magnetic media (e.g., magnetic tape) and in microform and microfiche form.

RETRIEVABILITY:

Records are indexed and retrieved by SSN.

SAFEGUARDS:

System security for automated records has been established in accordance with the HHS Information Resources Management Manual, Part 6, Automated Information System Security Program Handbook. This includes maintaining all magnetic tapes and magnetic discs within an enclosure attended by security guards. Anyone entering or leaving that enclosure must have special badges which are only issued to authorized personnel. All authorized personnel having access to the magnetic records are subject to the penalties of the Privacy Act. The microfiche are stored in locked cabinets, and are accessible to employees only on a need-to-know basis. All SSR State Data Exchange records are protected in accordance with agreements between SSA and the respective States regarding confidentiality, use, and redisclosure.

RETENTION AND DISPOSAL:

Original input transaction tapes received which contain initial claims and posteligibility actions are retained indefinitely although these are processed as received and incorporated into processing tapes which are updated to the master SSR tape file on a monthly basis. All magnetic tapes appropriate to SSI information furnished to specified Federal, State, and local agencies for verification of eligibility for benefits and under section 1631(e) are retained, in accordance with the Privacy Act accounting requirements, for at least 5 years or the life of the record, whichever is longer.

SYSTEM MANAGER AND ADDRESS:

Director, Office of Claims and Payment Requirements, Office of Systems Requirements, Social Security Administration, 6401 Security Boulevard, Baltimore, MD 21235.

NOTIFICATION PROCEDURE:

An individual can determine if this system contains a record about him/her by writing to or visiting any Social Security field office and providing his or her name and SSN. (Individuals should consult their local telephone directories for Social Security office address and telephone information.) (Furnishing the SSN is voluntary, but it will make searching for an individual's record easier and prevent delay.)

An individual requesting notification of records in person need not furnish any special documents of identity. Documents he/she would normally carry on his/her person would be sufficient (e.g., credit cards, driver's license, or voter registration card). An individual requesting notification via mail or telephone must furnish a minimum of his/her name, date of birth and address in order to establish identity, plus any additional information specified in this section.

These procedures are in accordance with HHS regulations 45 CFR part 5b.

RECORD ACCESS PROCEDURES:

Same as notification procedures. Requesters should also reasonably specify the record contents being sought. An individual who requests notification of, or access to, a medical record shall, at the time he or she makes the request, designate in writing a responsible representative who will be willing to review the record and inform the subject individual of its contents.

A parent or guardian who requests notification of, or access to, a minor's medical record shall at the time he or she makes the request designate a physician or other health professional (other than a family member) who will be willing to review the record and inform the parent or guardian of its contents at the physician's or health professional's discretion. These procedures are in accordance with HHS regulations 45 CFR part 5b.

CONTESTING RECORD PROCEDURES:

Same as notification procedures. Requesters should also reasonably identify the record, specify the information they are contesting and state the corrective action sought and the reasons for the correction with supporting justification showing how the record is incomplete, untimely, inaccurate or irrelevant. These procedures are in accordance with HHS regulations 45 CFR part 5b.

RECORD SOURCE CATEGORIES:

Data contained in the SSR are obtained for the most part from the applicant for SSI payments and are derived from the Claims Folders System (09–60–0089). The States also provide data affecting the SSR (State Data Exchange Files).

SYSTEMS EXEMPTED FROM CERTAIN PROVISIONS OF THE ACT:

None.

[FR Doc. 95–333 Filed 1–5–95; 8:45 am]

BILLING CODE 4190–29–P

Substance Abuse and Mental Health Services Administration (SAMHSA)

Notice of Meeting

Pursuant to Public Law 92–463, notice is hereby given of the meeting of the Substance Abuse and Mental Health Services Administration (SAMHSA) National Advisory Council in January 1995.

This meeting will include an open discussion of issues related to SAMHSA's reauthorization, budget, and SAMHSA's managed care activities. In addition, there will be a status report by the Council's workgroups on Health Care Reform, Co-Occurring Mental Illness and Substance Use Disorders, Program Evaluation, and a discussion of other SAMHSA program and policy issues. Attendance by the public will be limited to space available.

A summary of the meeting and a roster of council members may be obtained from: Ms. Susan E. Day, Program Assistant, SAMHSA National Advisory Council, 5600 Fishers Lane, Room 12C–15, Rockville, Maryland 20857; Telephone: (301) 443–4640.

Substantive program information may be obtained from the contact whose name and telephone number is listed below.

Committee Name: Substance Abuse and Mental Health Services Administration National Advisory Council.

Meeting Date: January 30, 1995.

Place: Holiday Inn—Bethesda, Versailles IV, 8120 Wisconsin Avenue, Bethesda, Maryland 20814.

Open: January 30, 1995, 9:00 a.m. to adjournment.

Contact: Toian Vaughn, Room 12C–15, Parklawn Building; Telephone (301) 443–4640. FAX (301) 443–1450.

Dated: December 30, 1994.

Jeri Lipov,

Committee Management Officer, SAMHSA.

[FR Doc. 95–302 Filed 1–5–95; 8:45 am]

BILLING CODE 4162–20–P

DEPARTMENT OF HOUSING AND URBAN DEVELOPMENT

Office of the Assistant Secretary for Community Planning and Development

[Docket No. N–95–1917; FR–3778–N–18]

Federal Property Suitable as Facilities to Assist the Homeless

AGENCY: Office of the Assistant Secretary for Community Planning and Development, HUD.

ACTION: Notice.

SUMMARY: This Notice identifies unutilized, underutilized, excess, and surplus Federal property reviewed by HUD for suitability for possible use to assist the homeless.

ADDRESSES: For further information, contact William Molster, room 7262, Department of Housing and Urban Development, 451 Seventh Street SW, Washington, DC 20410; telephone (202) 708–4300; TDD number for the hearing- and speech-impaired (202) 708–2565 (these telephone numbers are not toll-free), or call the toll-free Title V information line at 1–800–927–7588.

SUPPLEMENTARY INFORMATION: In accordance with Sections 2905 and 2906 of the National Defense Authorization Act for Fiscal Year 1994, P.L. 103–160 (Pryor Act Amendment) and with 56 FR 23789 (May 24, 1991) and section 501 of the Stewart B. McKinney Homeless Assistance Act (42 U.S.C. 11411), as amended, HUD is publishing this Notice to identify Federal buildings and other real property that HUD has reviewed for suitability for use to assist the homeless. The properties were reviewed using information provided to HUD by Federal landholding agencies regarding unutilized and underutilized buildings and real property controlled by such agencies or by GSA regarding its inventory of excess or surplus Federal property. This Notice is also published in order to comply with the April 21, 1993 Court Order in *National Coalition for the Homeless* v. *Veterans Administration,* No. 88–2503–OG (D.D.C.).

These properties reviewed are listed as suitable/available and unsuitable. In accordance with the Pryor Act Amendment the suitable properties will be made available for use to assist the homeless.

Properties listed as suitable/available will be available exclusively for homeless use for a period of 60 days from the date of this Notice. Please be advised, in accordance with the provisions of the Pryor Act Amendment, that if no expressions of interest or applications are received by the Department of Health and Human Services (HHS) during the 60 day period, these properties will no longer be available for use to assist the homeless. In the case of buildings and properties for which no such notice is received, these buildings and properties shall be available only for the purpose of permitting a redevelopment authority to express in writing an interest in the use of such buildings and properties. These buildings and properties shall be available for a submission by such redevelopment authority exclusively for one year. Buildings and properties available for a redevelopment authority shall not be available for use to assist the homeless. If a redevelopment authority does not express an interest in the use of the buildings or properties or commence the use of buildings or properties within the applicable time period such buildings and properties shall then be republished as properties available for use to assist the homeless pursuant to Section 501 of the Stewart B. McKinney Homeless Assistance Act.

Homeless assistance providers interested in any such property should send a written expression of interest to HHS, addressed to Judy Breitman, Division of Health Facilities Planning, U.S. Public Health Service, HHS, room 17A–10, 5600 Fishers Lane, Rockville, MD 20857; (301) 443–2265. (This is not a toll-free number.) HHS will mail to the interested provider an application packet, which will include instructions for completing the application. In order to maximize the opportunity to utilize a suitable property, providers should submit their written expressions of

interest as soon as possible. For complete details concerning the processing of applications, the reader is encouraged to refer to the interim rule governing this program, 56 FR 23789 (May 24, 1991).

Properties listed as unsuitable will not be made available for any other purpose for 20 days from the date of this Notice. Homeless assistance providers interested in a review by HUD of the determination of unsuitability should call the toll free information line at 1–800–927–7588 for detailed instructions or write a letter to William Molster at the address listed at the beginning of this Notice. Included in the request for review should be the property address (including zip code), the date of publication in the **Federal Register**, the landholding agency, and the property number.

For more information regarding particular properties identified in this Notice (*i.e.*, acreage, floor plan, existing sanitary facilities, exact street address), providers should contact the appropriate landholding agencies at the following addresses: Corps of Engineers: Gary B. Paterson, Chief, Base Realignment and Closure Office, Directorate of Real Estate, 20 Massachusetts Ave., NW, Rm. 4133, Washington, DC 20314–1000; (202) 272–0520; (This is not a toll-free number).

Dated: December 30, 1994.

Jacquie M. Lawing,

Deputy Assistant Secretary for Economic Development.

Title V, Federal Surplus Property Program Federal Register Report for 01/06/95

Suitable/Available Properties

Buildings (by State)

Indiana

13 Family Housing
Jefferson Proving Ground
Madison Co: Jefferson IN 47250–
Location: Include bldgs. 1, 3, 4, 7, 8, 11, 12, 15–17, 20, 21 & 23
Landholding Agency: COE–BC
Property Number: 329510001
Status: Pryor Amendment
Base closure Number of Units: 13
Comment: 2882–4744 sq. ft., concrete block/wood frame, 2–3 story, pres. of asbestos/lead paint, unexploded ordnances in area, no sched. environ. cleanup, sched. to be vacated 9/95

10 Detached Garages
Jefferson Proving Ground
Madison Co: Jefferson IN 47250–
Location: Include bldgs. 2, 5, 6, 9, 10, 13, 14, 18, 19 & 25
Landholding Agency: COE–BC
Property Number: 329510002
Status: Pryor Amendment
Base closure Number of Units: 10
Comment: 210–406 sq. ft., concrete/wood frame, 1 story, pres. of asbestos/lead paint, unexploded ordnances in area, no sched. environ. cleanup, scheduled to be vacated 9/95

7 Administration Buildings
Jefferson Proving Ground
Madison Co: Jefferson IN 47250–
Location: Include bldgs. 100, 108, 115, 138, 194, 144 & 205
Landholding Agency: COE–BC
Property Number: 329510003
Status: Pryor Amendment
Base closure Number of Units: 7
Comment: 420–27988 sq. ft., concrete/brick frame, 1–2 story, pres. of asbestos/lead paint, unexploded ordnances in area, no sched. environ. cleanup, incs. gen. instruct., ADP, comm. centers

2 Dining Facilities
Jefferson Proving Ground
Madison Co: Jefferson IN 47250–
Location: Include bldgs. 149 & 520
Landholding Agency: COE–BC
Property Number: 329510004
Status: Pryor Amendment
Base closure Number of Units: 2
Comment: 150–7771 sq. ft., concrete/wood frame, 1 story, pres. of asbestos/lead paint, unexploded ordnances in area, no sched. environ. cleanup, incs. lunchroom and restaurant

5 Recreation Facilities
Jefferson Proving Ground
Madison Co: Jefferson IN 47250–
Landholding Agency: COE–BC
Property Number: 329510005
Status: Pryor Amendment
Base closure Number of Units: 5
Comment: 374–2086 sq. ft., concrete/wood frame, 1 story, pres. of asbestos/lead paint, unexploded ordnances in area, no sched. environ. cleanup, incs. gym, change houses, recreation bldgs.

17 Maintenance Shops/Sheds
Jefferson Proving Ground
Madison Co: Jefferson IN 47250–
Location: Include bldgs. 105–106, 110, 117, 119, 121, 126, 130, 136, 140, 186, 216, 226–227, 311, 313 & 324
Landholding Agency: COE–BC
Property Number: 329510006
Status: Pryor Amendment
Base closure Number of Units: 17
Comment: 120–23270 sq. ft., concrete/brick or steel frame, 1–2 story, pres. of asbestos/lead paint, unexploded ordnances in area, no sched. environ. cleanup, scheduled to be vacated 9/95

12 Stores/Storehouses
Jefferson Proving Ground
Madison Co: Jefferson IN 47250–
Location: Include bldgs. 108A, 109, 120, 127, 148, 156, 185, 279, 291, 576, 601 & 715
Landholding Agency: COE–BC
Property Number: 329510007
Status: Pryor Amendment
Base closure Number of Units: 12
Comment: 384–20719 sq. ft., concrete/steel frame, 1–2 story, pres. of asbestos/lead paint, unexploded ordnances in area, no sched. environ. cleanup, scheduled to be vacated 9/95

Bldg. 33
Jefferson Proving Ground
Madison Co: Jefferson IN 47250–
Landholding Agency: COE–BC
Property Number: 329510008
Status: Pryor Amendment
Base closure Number of Units: 1
Comment: 3109 ft., concrete/wood frame, 1 story, pres. of asbestos/lead paint, unexploded ordnances in area, no sched. environ. cleanup, incs. clinic w/o beds, sched. to be vacated 9/95

Bldg. 114
Jefferson Proving Ground
Madison Co: Jefferson IN 47250–
Landholding Agency: COE–BC
Property Number: 329510009
Status: Pryor Amendment
Base closure Number of Units: 1
Comment: 1281 sq. ft., concrete/wood frame, 1 story, presence of asbestos/lead paint, unexploded ordnances in area, no sched. environ. cleanup, incs. Credit Union, to be vacated 9/95

14 Warehouses
Jefferson Proving Ground
Madison Co: Jefferson IN 47250–
Location: Include bldgs. 37, 122, 155, 193, 202, 219, 231, 265, 266, 301, 304, 305, 314, 771
Landholding Agency: COE–BC
Property Number: 329510010
Status: Pryor Amendment
Base closure Number of Units: 14
Comment: 184–4352 sq. ft., concrete/steel or wood frame, 1 story, pres. of asbestos/lead paint, unexploded ordnances, no sched. environ. cleanup, incs. general purpose warehouses

42 Transformer Buildings
Jefferson Proving Ground
Madison Co: Jefferson IN 47250–
Landholding Agency: COE—BC
Property Number: 329510011
Status: Pryor Amendment
Base closure Number of Units: 42
Comment: 48–532 sq. ft., concrete/brick frame, 1 story, pres. of asbestos/lead paint, unexploded ordnances in area, no sched. environ. cleanup, incs. dist. XFMR bldgs.

7 Sentry/Substations
Jefferson Proving Ground
Madison Co: Jefferson IN 47250–
Location: Include Bldgs. 40, 99, 102, 198, 232, 329, 542
Landholding Agency: COE—BC
Property Number: 329510012
Status: Pryor Amendment
Base closure Number of Units: 7
Comment: 24–880 sq. ft., concrete/brick or steel frame, 1 story, pres. of asbestos/lead paint, unexploded ordnances in area, no sched. environ. cleanup, scheduled to be vacated 9/95

6 Inflammable Materials Stor.
Jefferson Proving Ground
Madison Co: Jefferson IN 47250–
Location: Include Bldgs. 132, 169, 178, 180, 196, 303
Landholding Agency: COE—BC
Property Number: 329510013
Status: Pryor Amendment
Base closure Number of Units: 6
Comment: 45–268 sq. ft., concrete/steel frame, 1 story, pres. of asbestos/lead paint, unexploded ordnances in area, no scheduled environmental cleanup, sched. to be vacated 9/95

6 Vehicle Storage

Jefferson Proving Ground
Madison Co: Jefferson IN 47250–
Location: Include Bldgs. 174, 176, 182, 212, 223, 444
Landholding Agency: COE—BC
Property Number: 329510014
Status: Pryor Amendment
Base closure Number of Units: 6
Comment: 4000–13010 sq. ft., concrete/steel or brick frame, pres. of asbestos/lead paint, unexploded ordnances in area, no scheduled environmental cleanup, sched. to be vacated 9/95

16 Utility Buildings
Jefferson Proving Ground
Madison Co: Jefferson IN 47250–
Location: Include Bldgs. 145C, 145N, 145S, 184, 333, 103, 177, 141, 112, 195, 201, 261, 260, 283, 310 & 602
Landholding Agency: COE—BC
Property Number: 329510015
Status: Pryor Amendment
Base closure Number of Units: 16
Comment: 59–11752 sq. ft., concrete/brick or steel frame, pres. of asbestos/lead paint, unexploded ordnances, no sched. envir. cleanup, incs. heat plant, phone exchange, water supply, etc.

13 Miscellaneous Facilities
Jefferson Proving Ground
Madison Co: Jefferson IN 47250–
Location: Include Bldgs. 123, 125, 131, 146, 167, 189, 192, 204, 208, 241, 711, 712 & 714
Landholding Agency: COE—BC
Property Number: 329510016
Status: Pryor Amendment
Base closure Number of Units: 13
Comment: 75–6661 sq. ft., concrete or brick frame, pres. of asbestos/lead paint, unexploded ordnances, no sched. envir. cleanup, incs. photo lab, fire station, weather station, transmt. bld

4 Fuel Station Buildings
Jefferson Proving Ground
Madison Co: Jefferson IN 47250–
Location: Include Bldgs. 111, 118, 128 & 259
Landholding Agency: COE—BC
Property Number: 329510017
Status: Pryor Amendment
Base closure Number of Units: 4
Comment: 68–148 sq. ft., concrete/brick frame, presence of asbestos/lead paint, unexploded ordnances, no scheduled environmental cleanup, incs. gas station, scheduled to be vacated 9/95

54 Safe Shelters
Jefferson Proving Ground
Madison Co: Jefferson IN 47250–
Landholding Agency: COE—BC
Property Number: 329510018
Status: Pryor Amendment
Base closure Number of Units: 54
Comment: 114–6615 sq. ft., concrete frame, 1 story, presence of asbestos/lead paint, unexploded ordnances, no scheduled environ. cleanup, recent use-shelter persons from explosions

29 Ammo Facilities
Jefferson Proving Ground
Madison Co: Jefferson IN 47250–
Landholding Agency: COE—BC
Property Number: 329510019
Status: Pryor Amendment
Base closure Number of Units: 29
Comment: 141–13458 sq. ft., concrete/brick frame, 1 story, presence of asbestos/lead paint, unexploded ordnances, no scheduled environ. cleanup, incs. small arms bldgs, ammo facilities

31 Igloo Storage Facilities
Jefferson Proving Ground
Madison Co: Jefferson IN 47250–
Landholding Agency: COE—BC
Property Number: 329510020
Status: Pryor Amendment
Base closure Number of Units: 31
Comment: 65–2396 sq. ft., concrete frame, 1 story, presence of asbestos/lead paint, unexploded ordnances in area, no sched. environmental cleanup, scheduled to be vacated 9/95

14 Magazines
Jefferson Proving Ground
Madison Co: Jefferson IN 47250–
Landholding Agency: COE—BC
Property Number: 329510021
Status: Pryor Amendment
Base closure Number of Units: 14
Comment: 135–4352 sq. ft., concrete/brick frame, pres. of asbestos/lead paint, unexploded ordnances in area, no scheduled envir. cleanup, incs. fuse dets., gen. purpose & high explo.

Unsuitable Properties

Buildings (by State)

Indiana

Bldg. 197
Jefferson Proving Ground
Madison Co: Jefferson IN 47250–
Landholding Agency: COE—BC
Property Number: 329510022
Status: Pryor Amendment
Base closure Number of Units: 1
Reason: Other
Comment: Detached Latrine

[FR Doc. 95–6 Filed 1–5–95; 8:45 am]

BILLING CODE 4210–29–M

DEPARTMENT OF THE INTERIOR

Fish and Wildlife Service

Availability of a Draft Recovery Plan for the Sacramento—San Joaquin Delta Native Fishes for Review and Comment

AGENCY: Fish and Wildlife Service, Interior.

ACTION: Notice of document availability.

SUMMARY: The U.S. Fish and Wildlife Service (Service) announces the availability for public review of a draft recovery plan for the Sacramento-San Joaquin Delta native fishes. These species are native to Sacramento, San Joaquin, Contra Costa, and Solano Counties, California. The Service solicits review and comment from the public on this draft plan.

DATES: Comments on the draft recovery plan must be received on or before March 7, 1995 to receive consideration by the Service.

ADDRESSES: Persons wishing to review the draft recovery plan may obtain a copy by contacting the Field Supervisor, Ecological Services Office, U.S. Fish and Wildlife Service, 2800 Cottage Way Room E–1803, Sacramento, California, 95825–1846 (telephone: 916–978–4866), or the Assistant Regional Director, Ecological Services, U.S. Fish and Wildlife Service, Eastside Federal Complex, 911 NE 11th Avenue, Portland, Oregon 97232–4181 (telephone: 503–231–6241). Written comments and materials regarding the plan should be addressed to Mr. Joel A. Medlin, Field Supervisor, at the above Sacramento, California address. Comments and materials received are available on request for public inspection, by appointment, during normal business hours at the above Sacramento, California address.

FOR FURTHER INFORMATION CONTACT: Mr. Robert Pine or Ms. Lesa Meng at the above Sacramento, California address (telephone: 916–978–4866).

SUPPLEMENTARY INFORMATION:

Background

Restoring endangered or threatened animals and plants to the point where they are again secure, self-sustaining members of their ecosystems is a primary goal of the U.S. Fish and Wildlife Service's (Service) endangered species program. To help guide the recovery effort, the Service is working to prepare recovery plans for most of the listed species native to the United States. Recovery plans describe actions considered necessary for the conservation of the species, establish criteria for reclassification or delisting, and estimate time and cost for implementing the recovery measures needed.

The Endangered Species Act of 1973 (Act), as amended (16 U.S.C. 1531 *et seq.*) requires the development of recovery plans for listed species unless such a plan would not promote the conservation of a particular species. Section 4(f) of the Act, as amended in 1988, requires that public notice and an opportunity for public review and comment be provided during recovery plan development. The Service will consider all information presented during a public comment period prior to approval of each new or revised recovery plan. The Service and other Federal agencies will also take these comments into account in the course of implementing approved recovery plans.

The draft recovery plan for Sacramento-San Joaquin Delta native

fishes was developed to provide protection to all native fishes in the Sacramento-San Joaquin Delta (Delta) estuary in Sacramento, San Joaquin, Contra Costa, and Solano Counties, California. Species selected in the recovery plan included ''indicator species'' that, if protected, would provide protection to the entire Delta estuary. The delta smelt (*Hypomesus transpacificus*) is listed as a threatened species. The Sacramento Splittail (*Pogonichthys macrolepidotus*) was proposed as a threatened species on January 6, 1994. Longfin smelt (*Spirinchus thaleichthys*) and green sturgeon (*Acipenser transmontanus*) are category 2 species. Spring-run, late fall-run, and San Joaquin fall-run chinook salmon (*Oncorhynchus tshawytshcha*) are potential candidates for threatened or endangered status in the future. Information is also included on Sacramento perch (*Archoplites interruptus*), a species believed to be extirpated from the Delta at this time. The reasons these species have been listed, or are proposed for listing, are degradation and loss of estuarine habitat, entrainment in water diversions, upstream or reverse flows of rivers entering the Delta estuary and upstream encroachment of saline water which limits the low salinity habitat to deep-water river channels of the interior Delta. If the measures in draft recovery plan for Sacramento-San Joaquin Delta native fishes are implemented as proposed, areas including the Delta estuary and Suisun Marsh will be protected. The Service is currently soliciting comments for approval of the plan.

Public Comments Solicited

The Service solicits written comments on the recovery plan described. All comments received by the date specified will be considered prior to approval of the plan.

Authority

The authority for this action is section 4(f) of the Endangered Species Act, 16 U.S.C. 1533(f).

Dated: December 29, 1994.

David L. McMullen,

Acting Regional Director.

[FR Doc. 95–310 Filed 1–5–95; 8:45 am]

BILLING CODE 4310–55–M

Availability of a Revised Environmental Assessment and Receipt of an New Application for an Incidental Take Permit for a Project Called The Cloisters, a Single Family Residence Subdivision, in Brevard County, Florida

AGENCY: Fish and Wildlife Service, Interior.

ACTION: Notice.

SUMMARY: The Cavalear Companies (Applicant), is seeking an incidental take permit from the Fish and Wildlife Service (Service), pursuant to Section 10(a)(1)(B) of the Endangered Species Act of 1973 (Act), as amended. The permit would authorize the take of two families of the threatened Florida scrub jay, Aphelocoma coerulescens coerulescens, and several of the threatened Eastern Indigo Snake, Drymarchon corais couperi, in Brevard County, Florida, for a period of 5 years. The proposed taking is incidental to construction of 266 single family homes including the necessary infrastructure on approximately 104 acres (Project), 15.5 acres of which is occupied by Florida scrub jay habitat to be permanently altered. The Project is called The Cloisters, and is located along State Road A1A, south of the Terrace Shores subdivision, in the south beaches area of Brevard County, Florida.

The Service also announces the availability of a *new* environmental assessment (EA) and *revised* habitat conservation plan (HCP) for the incidental take application. Copies of the EA or HCP may be obtained by making a request to the Regional Office address below. This notice also advises the public that the Service has made a preliminary determination that issuing the incidental take permit is not a major Federal action significantly affecting the quality of the human environment within the meaning of Section 102(2)(C) of the National Environmental Policy Act of 1969, as amended. The Finding of No Significant Impact is based on information contained in the EA and HCP. The final determination will be made no sooner than 30 days from the date of this notice. This notice is provided pursuant to Section 10(c) of the Act and National Environmental Policy Act Regulations (40 CFR 1506.6).

DATES: Written comments on the permit application, EA and HCP should be received on or before February 6, 1995.

ADDRESSES: Persons wishing to review the application, HCP, and EA may obtain a copy by writing the Service's Southeast Regional Office, Atlanta, Georgia. Documents will also be available for public inspection by appointment during normal business hours at the Regional Office, or the Jacksonville, Florida, Field Office. Written data or comments concerning the application, EA, or HCP should be submitted to the Regional Office. Please reference permit under PRT–*795856* in such comments.

Regional Permit Coordinator, U.S. Fish and Wildlife Service, 1875 Century Boulevard, Suite 210, Atlanta, Georgia 30345, (telephone 404/679–7110, fax 404/679–7081).

Field Supervisor, U.S. Fish and Wildlife Service, 6620 Southpoint Drive, South, Suite 310, Jacksonville, Florida 32216–0912, (telephone 904/232–2580, fax 904/232–2404).

FOR FURTHER INFORMATION CONTACT: Dawn Zattau at the Jacksonville, Florida, Field Office, or Rick G. Gooch at the Atlanta, Georgia, Regional Office.

SUPPLEMENTARY INFORMATION: The notice announces the availability of a *revised* HCP and application for the Project. This notice modifies a previous one published for the Project in the **Federal Register** appearing on October 28, 1994 (**Federal Register** 59:54207). As a result of the public comment period on the original application, 15 comments were received. The majority of the comments identified several deficiences in the original HCP and application. Subsequent to discussions between the Service and the applicant, the applicant withdrew the original application from consideration. The applicant has resubmitted a revised HCP and application to address the identified deficiences.

The following is a summary of the revised HCP and application:

- The total acreage of habitat occupied by the Florida scrub jay is determined to be 15.5 acres, not 12 acres as originally stated. Mitigation of 31.5 acres is now proposed in the revised HCP (versus an original mitigation of 24 acres in fee-simple acquisition).
- The revised HCP has added a request for incidental take of the threatened Eastern Indigo Snake on the Project, and several listed plants are now included in the Service's analysis of biological impacts from the Project.
- The revised HCP is seeking incidental take of two families of Florida scrub jays (versus one family of jays in the original application).

Dated: December 30, 1994.

John T. Brown,

Acting Regional Director.

[FR Doc. 95–309 Filed 1–5–95; 8:45 am]

BILLING CODE 4310–55–P

Geological Survey

National Mapping Division; Announcement of Opportunity; Data Grant Program for Land Processes Research

AGENCY: National Mapping Division, USGS, DOI.

ACTION: Notice.

SUMMARY: The U.S. Geological Survey's National Mapping Division is initiating a Data Grant Program to distribute remotely sensed data acquired by Earth-orbiting satellites. Landsat multispectral scanner (MSS) data and advanced very high resolution radiometer (AVHRR) data will be provided at no cost to a limited number of qualified nonprofit organizations that will apply these data to land processes research. These data are limited to conterminous United States, Alaska, and Hawaii sites. A detailed information packet is available.

DATES: Data Grant Program requests due April 1, 1995.

ADDRESSES: Data Grant Program, Science and Applications Branch, U.S. Geological Survey, EROS Data Center, Sioux Falls, SD 57198.

SUPPLEMENTARY INFORMATION: The National Mapping Division's Data Grant Program provides an opportunity for nonprofit organizations to obtain remotely sensed satellite data at no cost. This program provides no support other than data. Nonprofit organizations may apply by submitting Data Grant Program requests.

Remotely sensed data offered through this program and identified in all related requests must be applied to land processes research. Land processes are defined broadly as the set of natural processes and human activities that affect the chemical composition, physical properties, and geographic distribution of materials (including inland and coastal waters and ice) on the continental land surface. Effects of these processes must be expressed at the surface if the data being offered are to be useful. Researchers engaged in any field of physical, biological, or social science and who are interested in investigation land processes and their effects are encouraged to submit Data Grant Program requests.

The Data Grant Committee, consisting of National Mapping Division researchers, will review these requests. Limited quantities of free Landsat MSS data and AVHRR data will be awarded to those Data Grant Program requestors selected by the committee. Specific information on data types, guidelines for submission and evaluation of requests, procedures for data selection and retrieval, and schedules for request completion and reporting are outlined in the information packet.

The information packet may be requested by writing to the address listed above; sending an electronic mail message to eros@erosa.cr.usgs.gov via Internet; or sending a Fax to 605–594–6589. Each respondent is asked to include name, organization, address, and telephone number.

Dated: December 22, 1994.

James R. Plasker,

Associate Chief, National Mapping Division.

[FR Doc. 95–332 Filed 1–5–95; 8:45 am]

BILLING CODE 4310–31–M

INTERSTATE COMMERCE COMMISSION

Notice of Intent to Engage in Compensated Intercorporate Hauling Operations

This is to provide notice as required by 49 U.S.C. 10524(b)(1) that the named corporations intend to provide or use compensated intercorporate hauling operations as authorized in 49 U.S.C. 10524(b).

A. 1. Parent corporation and address of principal office: Alan Corporation of New England, 60 Prescott Street, Worcester, MA 01605.

2. Wholly owned subsidiaries which will participate in the operation, and State of incorporation: Alan Petroleum Carriers Inc., Incorporated in the State of Massachusetts.

B. 1. The parent corporation is Country Fresh, Inc. and the address of the principal office is: 2555 Buchanan Avenue S.W., P.O. Box 814, Grand Rapids, Michigan 49508.

2. Wholly-owned subsidiaries which will participate in the operations, and their States of Incorporation:

Embest, Inc., a Michigan corporation

G.R. Best, Inc., a Michigan corporation

Bemid, Inc., a Michigan corporation

McDonald Dairy, Inc., a Michigan corporation

Frostbite Brands, Inc., a Michigan corporation

Burger Dairy Co., an Indiana corporation

Toledo Milk Processors, Inc., a Michigan corporation

Vernon A. Williams,

Secretary.

[FR Doc. 95–316 Filed 1–5–94; 8:45 am]

BILLING CODE 7035–01–M

DEPARTMENT OF LABOR

Employment Standards Administration/Wage and Hour Division

Minimum Wages for Federal and Federally Assisted Construction; General Wage Determination Decisions

General wage determination decisions of the Secretary of Labor are issued in accordance with applicable law and are based on the information obtained by the Department of Labor from its study of local wage conditions and data made available from other sources. They specify the basic hourly wage rates and fringe benefits which are determined to be prevailing for the described classes of laborers and mechanics employed on construction projects of a similar character and in the localities specified therein.

The determinations in these decisions of prevailing rates and fringe benefits have been made in accordance with 29 CFR Part 1, by authority of the Secretary of Labor pursuant to the provisions of the Davis-Bacon Act of March 3, 1931, as amended (46 Stat. 1494, as amended, 40 U.S.C. 276a) and of other Federal statutes referred to in 29 CFR Part 1, Appendix, as well as such additional statutes as may from time to time be enacted containing provisions for the payment of wages determined to be prevailing by the Secretary of Labor in accordance with the Davis-Bacon Act. The prevailing rates and fringe benefits determined in these decisions shall, in accordance with the provisions of the foregoing statutes, constitute the minimum wages payable on Federal and federally assisted construction projects to laborers and mechanics of the specified classes engaged on contract work of the character and in the localities described therein.

Good cause is hereby found for not utilizing notice and public comment procedure thereon prior to the issuance of these determinations as prescribed in 5 U.S.C. 553 and not providing for delay in the effective date as prescribed in that section, because the necessity to issue current construction industry wage determinations frequently and in large volume causes procedures to be impractical and contrary to the public interest.

General wage determination decisions, and modifications and supersedeas decisions thereto, contain no expiration dates and are effective from their date of notice in the **Federal Register**, or on the date written notice is received by the agency, whichever is earlier. These decisions are to be used

in accordance with the provisions of 29 CFR Parts 1 and 5. Accordingly, the applicable decision, together with any modifications issued, must be made a part of every contract for performance of the described work within the geographic area indicated as required by an applicable Federal prevailing wage law and 29 CFR Part 5. The wage rates and fringe benefits, notice of which is published herein, and which are contained in the Government Printing Office (GPO) document entitled ''General Wage Determinations Issued Under The Davis-Bacon And Related Acts,'' shall be the minimum paid by contractors and subcontractors to laborers and mechanics.

Any person, organization, or governmental agency having an interest in the rates determined as prevailing is encouraged to submit wage rate and fringe benefit information for consideration by the Department. Further information and self-explanatory forms for the purpose of submitting this data may be obtained by writing to the U.S. Department of Labor, Employment Standards Administration, Wage and Hour Division, Division of Wage Determinations, 200 Constitution Avenue, N.W., Room S–3014, Washington, D.C. 20210.

Modification to General Wage Determinations Decisions

The number of decisions listed in the Government Printing Office document entitled ''General Wage Determinations Issued Under the Davis-Bacon and Related Acts'' being modified are listed by Volume and State. Dates of publication in the **Federal Register** are in parentheses following the decisions being modified.

Volume I:

Connecticut
CT940005 (FEB. 11, 1994)

Volume II:

District of Columbia
DC940001 (FEB. 11, 1994)
Maryland
MD940036 (FEB. 11, 1994)
MD940048 (FEB. 11, 1994)
Pennsylvania
PA940004 (FEB. 11, 1994)
Virginia
VA940005 (FEB. 11, 1994)
VA940021 (FEB. 11, 1994)
VA940023 (FEB. 11, 1994)
VA940025 (FEB. 11, 1994)
VA940033 (FEB. 11, 1994)
VA940036 (FEB. 11, 1994)
VA940065 (FEB. 11, 1994)
VA940067 (FEB. 11, 1994)
VA940085 (FEB. 11, 1994)
VA940087 (FEB. 11, 1994)
VA940088 (FEB. 11, 1994)
VA940104 (FEB. 11, 1994)
VA940105 (FEB. 11, 1994)
VA940108 (APR. 15, 1994)

Volume III:

Kentucky
KY940001 (FEB. 11, 1994)
KY940002 (FEB. 11, 1994)
KY940003 (FEB. 11, 1994)
KY940004 (FEB. 11, 1994)
KY940006 (FEB. 11, 1994)
KY940007 (FEB. 11, 1994)
KY940025 (FEB. 11, 1994)
KY940027 (FEB. 11, 1994)
KY940028 (FEB. 11, 1994)
KY940029 (FEB. 11, 1994)
KY940035 (FEB. 11, 1994)

Volume IV:

Illinois
IL940019 (FEB. 11, 1994)
Ohio
OH940001 (FEB. 11, 1994)
OH940002 (FEB. 11, 1994)
OH940003 (FEB. 11, 1994)
OH940026 (FEB. 11, 1994)
OH940027 (FEB. 11, 1994)
OH940028 (FEB. 11, 1994)
OH940029 (FEB. 11, 1994)
OH940034 (FEB. 11, 1994)
OH940035 (FEB. 11, 1994)
OH940036 (FEB. 11, 1994)

Volume V:

Iowa
IA940001 (FEB. 11, 1994)
Kansas
KS940006 (FEB. 11, 1994)
KS940009 (FEB. 11, 1994)
KS940012 (FEB. 11, 1994)
KS940016 (FEB. 11, 1994)
KS940017 (FEB. 11, 1994)
KS940024 (FEB. 11, 1994)
KS940025 (FEB. 11, 1994)
KS940029 (FEB. 11, 1994)
KS940061 (FEB. 11, 1994)
Louisiana
LA940005 (FEB. 11, 1994)
LA940009 (FEB. 11, 1994)
LA940015 (FEB. 11, 1994)
LA940017 (FEB. 11, 1994)
LA940018 (FEB. 11, 1994)

Volume VI:

Alaska
AK940001 (FEB. 11, 1994)
Idaho
ID940001 (FEB. 11, 1994)
Montana
MT940001 (FEB. 11, 1994)
MT940002 (FEB. 11, 1994)
MT940006 (FEB. 11, 1994)
MT940007 (FEB. 11, 1994)
MT940008 (FEB. 11, 1994)
Oregon
OR940001 (FEB. 11, 1994)
OR940004 (FEB. 11, 1994)
Washington
WA940001 (FEB. 11, 1994)
WA940002 (FEB. 11, 1994)
WA940005 (FEB. 11, 1994)
WA940008 (FEB. 11, 1994)

General Wage Determination Publication

General wage determinations issued under the Davis-Bacon and related Acts, including those noted above, may be found in the Government Printing Office (GPO) document entitled ''General Wage Determinations Issued Under The Davis-Bacon and Related Acts''. This publication is available at each of the 50 Regional Government Depository Libraries and many of the 1,400 Government Depository Libraries across the county. Subscriptions may be purchased from: Superintendent of Documents, U.S. Government Printing Office, Washington, DC 20402, (202) 783–3238.

When ordering subscription(s), be sure to specify the State(s) of interest, since subscriptions may be ordered for any or all of the six separate volumes, arranged by State. Subscriptions include an annual edition (issued in January or February) which included all current general wage determinations for the States covered by each volume. Throughout the remainder of the year, regular weekly updates will be distributed to subscribers.

Signed at Washington, D.C. this 30th day of December 1994.

Alan L. Moss,

Director, division of Wage Determination.

[FR Doc. 95–297 Filed 1–5–94; 8:45 am]

BILLING CODE 4510–27–M

NATIONAL SCIENCE FOUNDATION

Special Emphasis Panel in Bioengineering and Environmental Systems; Notice of Meeting

In accordance with the Federal Advisory Committee Act (Pub. L. 92–463, as amended), the National Science Foundation announces the following meeting.

Name: Special Emphasis Panel in Bioengineering and Environmental Systems (No. 1189)

Dates and Times: January 24, 1995; 8:30am–5:00pm

Place: National Science Foundation, 4201 Wilson Boulevard, room 770, Arlington, VA 22230

Type of Meeting: Closed

Contact Person: John D. Enderle, Program Director, Biomedical Engineering and Research to Aid Persons with Disabilities, Division of Bioengineering and Environmental Systems, National Science Foundation, 4201 Wilson Boulevard, Arlington, VA 22230, Telephone: (703) 306–1319.

Purpose of Meeting: To provide advice and recommendations concerning proposals submitted to NSF for financial support.

Agenda: To review and evaluate proposals as part of the selection process for awards.

Reason for Closing: The proposals being reviewed include information of a proprietary or confidential nature, including technical information; financial data, such as salaries; and personal information

concerning individuals associated with the proposals. These matters are exempt under 5 U.S.C. 552b(c), (4) and (6) of the Government in the Sunshine Act.

Dated: January 3, 1995.

M. Rebecca Winkler,

Committee Management Officer.

[FR Doc. 95–338 Filed 1–5–95; 8:45 am]

BILLING CODE 7555–01–M

Special Emphasis Panel in Civil and Mechanical Systems; Notice of Meeting

In accordance with the Federal Advisory Committee Act (Pub. L. 92–463, as amended), the National Science Foundation (NSF) announces the following meeting:

Name: Special Emphasis Panel in Civil and Mechanical Systems (#1205).

Dates & Times: January 26 & 27, 1995; 8:30 a.m. to 5 p.m.

Place: NSF, Room 530/580, 4201 Wilson Boulevard, Arlington, VA.

Contact: Dr. Oscar W. Dillon/Dr. William A. Spitzig, Program Directors, Room 545, NSF.

Type of Meeting: Closed.

Purpose of Meeting: To provide advice and recommendations concerning support for research proposals submitted to the NSF for financial support.

Reason for Closing: The proposals being reviewed include information of a proprietary or confidential nature, including technical information, financial data, such as salaries; and personal information concerning individuals associated with the proposals.

These matters are exempt under 5 U.S.C. 552b(c), (4) and (6) of Government in the Sunshine Act.

Dated: January 3, 1995.

M. Rebecca Winkler,

Committee Management Officer.

[FR Doc. 95–339 Filed 1–5–95; 8:45 am]

BILLING CODE 7555–01–M

Special Emphasis Panel in Electrical and Communications Systems; Notice of Meeting

In accordance with the Federal Advisory Committee Act (Pub. L. 92–463, as amended), the National Science Foundation announces the following meeting.

Name: Special Emphasis Panel in Electrical and Communications Systems (#1196)

Date and Time: January 23–24, 1995—8:00 am to 5:00 pm

Place: National Science Foundation, 4201 Wilson Boulevard, Room 630, Arlington, Virginia 22230.

Type of Meeting: Closed

Contact Person: Dr. Albert B. Harvey, Program Director, ECS, Room 675, National Science Foundation, 4201 Wilson Blvd., Arlington, VA. Telephone: (703) 306–1339.

Purpose of meeting: To provide advice and recommendations concerning proposals submitted to NSF for financial support.

Agenda: To review and evaluate applications of Faculty Early Career Development (CAREER) research proposals.

Reason for Closing: The proposals being reviewed include information of a proprietary confidential nature, including technical information; financial data, such as salaries; and personal information concerning individuals associated with the proposals. These matters are exempt under 5 U.S.C. 552b(c) (4) and (6) of the Government Sunshine Act.

Dated: January 3, 1995.

[FR Doc. 95–337 Filed 1–5–95; 8:45 am]

BILLIND CODE 7555–01–M

Special Emphasis Panel in International Programs; Notice of Meeting

In accordance with the Federal Advisory Committee Act (Pub. L. 92–463, as amended), the National Science Foundation announces the following meeting.

Name: Special Emphasis Panel in International Programs

Date and Time: January 23–24, 1995; 8:30 a.m. to 5:00 p.m. (Alternate date due to bad weather: January 30–31, 1995)

Place: Rooms 340, 360 and 365

Type of Meeting: Closed

Contact Person: Janice Cassidy, Program Manager, Division of International Programs, Room 935, National Science Foundation, 4201 Wilson Boulevard, Arlington, VA 22230.

Telephone: (703) 306–1701.

Purpose of Meeting: To provide advice and recommendations concerning proposals submitted to NSF for financial support.

Agenda: To review and evaluate applications submitted to the Division of International Programs for the Summer Institute in Japan for U.S. Graduate Students in Science and Engineering as part of the selection process for awards.

Reason for Closing: The meeting is closed to the public because of the proposals being reviewed include information of a proprietary or confidential nature, including technical information; financial data, such as salaries; and personal information concerning individuals associated with the proposals. These matters are exempt under 5 U.S.C. 552b(c) (4) and (6) of the Government in the Sunshine Act.

Dated: January 3, 1995.

M. Rebecca Winkler,

Committee Management Officer.

[FR Doc. 95–335 Filed 1–5–95; 8:45 am]

BILLING CODE 7555–01–M

Special Emphasis Panel in Networking and Communications Research and Infrastructure (NCRI); Notice of Meeting

In accordance with the Federal Advisory Committee Act (Pub. L. 92–463, as amended), the National Science Foundation announces the following meeting:

Name: Special Emphasis Panel in Networking and Communications Research and Infrastructure (#1207)

Date and Time: January 26–27, 1995; 8:30 am to 5 pm

Place: Room 1175, National Science Foundation, 4201 Wilson Blvd., Arlington, VA 22230

Type of Meeting: Closed

Contact Person: Dr. Aubrey Bush, NCRI, National Science Foundation, room 1175, Arlington, VA 22230 (703 306–1949)

Purpose of Meeting: To provide advice and recommendations concerning proposals submitted to NSF for financial support.

Agenda: To review & evaluate proposals submitted for Career Program.

Reason for Closing: The proposals being reviewed include information of a proprietary or confidential nature, including technical information; financial data, such as salaries, and personal information concerning individuals associated with the proposals. These matters are exempt under 5 U.S.C. 552b.(c) (4) and (6) of the Government in the Sunshine Act.

Dated: January 3, 1995.

M. Rebecca Winkler,

Committee Management Officer.

[FR Doc. 95–341 Filed 1–5–95; 8:45 am]

BILLING CODE 7555–01–M

Special Emphasis Panel in Physics; Notice of Meeting

In accordance with the Federal Advisory Committee Act (Pub. L. 92–463, as amended), the National Science Foundation announces the following meeting.

Name: Special Emphasis Panel in Physics (#1208)

Date and time: Friday, January 28, 1995; 9:00 a.m. to 5:00 p.m., Saturday, January 29, 1995; 9:00 a.m. to 12:00 p.m.

Place: Room 1020, National Science Foundation, 4201 Wilson Blvd., Arlington, VA 22230

Type of Meeting: Closed

Contact Person: Dr. William Chinowsky, Program Director for Elementary Particle Physics, National Science Foundation, 4201 Wilson Blvd., Arlington, VA 22230. Telephone: (703) 306–1895.

Purpose of Meeting: To provide advice and recommendations concerning proposals submitted to NSF for financial support.

Agenda: To review and evaluate the Faculty Early Career Development (CAREER) proposals as part of the selection process for awards.

Reason for Closing: The proposals being reviewed include information of a

proprietary or confidential nature, including technical information; financial data, such as salaries; and personal information concerning individuals associated with the proposals. These matters are exempt under 5 U.S.c. 552b(c), (4) and (6) of the Government in the Sunshine Act.

Dated: January 3, 1995.

M. Rebecca Winkler,

Committee Management Officer.

[FR Doc. 95–340 Filed 1–5–95; 8:45 am]

BILLING CODE 7555–01–M

Special Emphasis Panel in Research, Evaluation and Dissemination Notice of Meeting

In accordance with the Federal Advisory Committee Act (Pub. L. 92–463, as amended), the National Science Foundation announces the following meeting:

Name: Special Emphasis Panel in Research, Evaluation and Dissemination.

Date and Time: January 23, 1995; 10 a.m. to 5 p.m.; January 24, 1995; 9 a.m. to 4 p.m.

Place: Room 375, National Science Foundation, 4201 Wilson Boulevard, Arlington, VA 22230.

Type of Meeting: Closed.

Contact Person: Dr. Iris Rotberg, Program Director, 4201 Wilson Boulevard, room 855, Arlington, VA 22230. Telephone (703) 306–1656.

Purpose of Meeting: To provide advice and recommendations concerning proposals submitted to NSF for financial support.

Agenda: To review and evaluate proposals and provide advice and recommendations as part of the selection process for proposals submitted to the Studies and Indicators Program.

Reason for Closing: Because the proposals reviewed include information of a proprietary or confidential nature, including technical information; financial data, such as salaries; and personal information concerning individuals associated with proposals, the meetings are within exemptions (4) and (6) of 5 U.S.C. 552b(c), Government in the Sunshine Act.

Dated: January 3, 1995.

M. Rebecca Winkler,

Committee Management Officer.

[FR Doc. 95–336 Filed 1–5–95; 8:45 am]

BILLING CODE 7555–01–M

Special Emphasis Panel in Undergraduate Education; Notice of Meeting

In accordance with the Federal Advisory Committee Act (Pub. L. 92–463, as amended), the National Science Foundation announces the following meeting:

Name: Special Emphasis Panel in Undergraduate Education.

Dates and Times: January 25, 1995; 7:30 p.m. to 9 p.m.; January 26, 1995; 8:30 a.m. to 5 p.m.; January 27, 1995; 8:30 a.m. to 5 p.m.; January 28, 1995; 8:30 a.m. to 3 p.m.; February 1, 1995; 7:30 p.m. to 9 p.m.; February 2, 1995; 8:30 a.m. to 5 p.m.; February 3, 1995; 8:30 a.m. to 5 p.m.; February 4, 1995; 8:30 a.m. to 3 p.m.

Place; Doubletree National Airport Hotel, 300 Army/Navy Drive, Arlington, VA 22202.

Type of Meeting: Closed.

Contact Person: Dr. Norman Fortenberry, Program Director, National Science Foundation, 4201 Wilson Boulevard, Arlington, VA 22230, Telephone: (703) 306–1667.

Purpose of Meeting: To provide advice and recommendations concerning proposals submitted to NSF for financial support.

Agenda: To review and evaluate unsolicited proposals submitted to the Instrumentation and Laboratory Improvement/Leadership Laboratory Improvement Panel Meeting

Reason for Closing: The proposals being reviewed include information of a proprietary or confidential nature, including technical information; financial data, such as salaries; and personal information concerning individuals associated with the proposals. These matters are exempt under 5 U.S.C. 552b.(c) (4) and (6) of the Government in the Sunshine Act.

Dated; January 3, 1995.

M. Rebecca Winkler,

Committee Management Officer.

[FR Doc. 95–334 Filed 1–5–95; 8:45 am]

BILLING CODE 7555–01–M

NUCLEAR REGULATORY COMMISSION

[Docket Nos. STN 50–528, STN 50–529, and STN 50–530]

Arizona Public Service Company; Palo Verde Nuclear Generating Station, Units 1, 2, and 3; Notice of Consideration of Issuance of Amendment to Facility Operating Licenses, Proposed no Significant Hazards Consideration Determination, and Opportunity for a Hearing

The U.S. Nuclear Regulatory Commission (the Commission) is considering issuance of amendments to Facility Operating License Nos. NPF–41, NPF–51, and NPF–74 issued to Arizona Public Service Company for Operation of the Palo Verde Nuclear Generating Station, Units 1, 2, and 3, located in Maricopa County, Arizona.

The proposed amendments would change the refueling machine overload cutoff limit from less than or equal to 1556 pounds to less than or equal to 1600 pounds. The change is a consequence of the fuel assembly weight increase which resulted from design and fabrication improvements.

Before issuance of the proposed license amendments, the Commission will have made findings required by the Atomic Energy Act of 1954, as amended (the Act) and the Commission's regulations.

The Commission has made a proposed determination that the amendment request involves no significant hazards consideration. Under the Commission's regulations in 10 CFR 50.92, this means that operation of the facility in accordance with the proposed amendments would not (1) involve a significant increase in the probability or consequences of an accident, previously evaluated; or (2) create the possibility of a new or different kind of accident from any accident previously evaluated or (3) involve a significant reduction in a margin of safety. As required by 10 CFR 50.91(a), the licensee has provided its analysis of the issue of no significant hazards consideration, which is presented below:

Standard 1—Does the proposed change involve a significant increase in the probability or consequences of an accident previously evaluated?

The proposed Technical Specification amendment to sections 3.9.6 and 4.9.6.1 provides a revised refueling machine hoist overload cutoff limit that is appropriate for the increased weight of the fuel assemblies. The increased weight of fuel assemblies results from design and fabrication improvements such as denser fuel pellets, laser welded GUARDIAN™ grids, and laser welded spacer grids. The weight of a fuel assembly is identified in the UFSAR as a parameter in the analysis for a Fuel Handling Accident. The radiological consequences of a Fuel Handling Accident were reevaluated in order to incorporate fuel assembly design changes including increases in the fuel assembly weight and increases of the maximum fuel enrichment. The analysis used a fuel assembly enriched to 4.3 weight percent and the power assigned to the assembly was 1.65 times the average power per assembly. The accident is assumed to occur 100 hours after reactor shutdown and it is also assumed that all 236 fuel rods fail. The resultant thyroid dose at the 2 hour exclusion area boundary is 71.5 rem which meets the Standard Review Plan 15.7.4 limit of 75 rem. The conclusions for the radiological consequences of a Fuel Handling Accident remain consistent with the results in the Safety Evaluation Report. The increased weight of the fuel assemblies was reviewed, separate from this proposal, in accordance with the provisions of 10 CFR 50.59 and found to be acceptable, as described above.

The increase in the refueling machine overload cutoff limit does not impact the manner in which the refueling machine is operated or the manner in which the fuel assemblies are engaged and lifted. The overload cutoff limit is not a parameter used in the analysis of a Fuel Handling Accident. The overload cutoff limit was incorporated on the refueling machine hoist to protect the core internals and pressure vessel from

possible damage in the event the fuel assembly becomes mechanically bound as it is withdrawn from the reactor vessel. The proposed overload cutoff limit was determined as follows:

Overload Cut Off limit=(Hoist Wet Weight)+(Grapple Wet Weight)+(Max Wet Fuel Weight)+90lbs.

Where:

(a) Hoist and Grapple Wet Weight=176 lbs.
(b) Maximum Wet Fuel Weight=1334 lbs.

The basis for the 90 pounds had two considerations: (1) to be large enough to account for friction loads during fuel assembly withdrawal; and, (2) to be small enough to ensure that while lifting a minimum weight fuel assembly, the loads imposed on a mechanically bound fuel assembly are below the design limit specified by the fuel manufacturer. The maximum value for the existing overload cut off limit was specified by the fuel manufacturer to be 1602 pounds.

The revised overload cut off limit does not decrease the factor of safety for the refueling machine hoist below the Crane Manufacturer's [sic] Association of America (CMAA) Standard 70 required value of 5/1.

Therefore, the proposed change for the refueling machine overload cut off limit will not significantly increase the probability or consequences of an accident previously evaluated and will remain bounded by the accident analysis of Chapter 15 of the Updated Final Safety Analysis Report (UFSAR).

Standard 2—Does the proposed change create the possibility of a new or different kind of accident from any accident previously evaluated?

The proposed Technical Specification amendment to Sections 3.9.6 and 4.9.6.1 would provide a revised refueling machine hoist overload cut off limit that is appropriate for the increased weight of the fuel assemblies. The increased weight of fuel assemblies results from design and fabrication improvements such as denser fuel pellets, laser welded GUARDIAN™ grids, and laser welded spacer grids. The fuel overload cut off limit was incorporated on the refueling machine hoist to protect the core internals and pressure vessel from possible damage in the event the fuel assembly becomes mechanically bound as it is withdrawn from the reactor vessel. The proposed overload cut off limit was determined as follows:

Overload Cut Off limit=(Hoist Wet Weight)+(Grapple Wet Weight)+(Max Wet Fuel Weight)+90 lbs.

Where:

(a) Hoist and Grapple Wet Weight=176 lbs.
(b) Maximum Wet Fuel Weight=1334 lbs.

The basis for the 90 pounds had two considerations: (1) to be large enough to account for friction loads during fuel assembly withdrawal; and, (2) to be small enough to ensure that while lifting a minimum weight fuel assembly, the loads imposed on a mechanically bound fuel assembly are below the design limit specified by the fuel manufacturer. The maximum value for the existing overload cut off limit was specified by the fuel manufacturer to be 1602 pounds to limit the potential for damage to the fuel assemblies.

The accident of concern related to the change in the refueling machine overload cut off limit is the Fuel Handling Accident. This accident occurs when a fuel bundle becomes disengaged from the refueling machine grapple. The change of the refueling machine overload cut off limit does not change the way in which the refueling machine grapple engages the fuel assemblies. Since fuel handling is the subject of change, no new or different kinds of accidents are created.

Therefore, it can be concluded that the proposed change to Sections 3.9.6 and 4.9.6.1 will not create the possibility of a new or different kind of accident from any accident previously evaluated.

Standard 3—Does the proposed change involve a significant reduction in a margin of safety.

The proposed Technical Specification amendment to Sections 3.9.6 and 4.9.6.1 would provide a revised refueling machine hoist overload cut off limit that is appropriate for the increased weight of the fuel assemblies. The increased weight of fuel assemblies results from design and fabrication improvements such as denser fuel pellets, laser welded GUARDIAN™ grids, and laser welded spacer grids. The overload cut off limit was incorporated on the refueling machine hoist to protect the core internals and pressure vessel from possible damage in the event the fuel assembly becomes mechanically bound as it is withdrawn from the reactor vessel. The proposed overload cut off limit was determined as follows:

Overload Cut Off limit=(Hoist Wet Weight)+(Grapple Wet Weight)+(Max Wet Fuel Weight)+90 lbs.

Where:

(a) Hoist and Grapple Wet Weight=176 lbs.
(b) Maximum Wet Fuel Weight=1334 lbs.

The basis for the 90 pounds had two considerations: (1) to be large enough to account for friction loads during fuel assembly withdrawal; and, (2) to be small enough to ensure that while lifting a minimum weight fuel assembly, the loads imposed on a mechanically bound fuel assembly are below the design limit specified by the fuel manufacturer. The maximum value for the existing overload cut off limit was specified by the fuel manufacturer to be 1602 pounds.

The overload cut off limit is not a parameter used in the analysis of a Fuel Handling Accident. The conclusion regarding the radiological consequences of the Fuel Handling Accident remain valid, and there is no decrease in the margin of safety.

Therefore, it can be concluded that the proposed change will maintain the integrity of the fuel assemblies and reactor vessel internals and does not involve a significant reduction in the margin of safety.

The NRC staff has reviewed the licensee's analysis and, based on this review, it appears that the three standards of 10 CFR 50.92(c) are satisfied. Therefore, the NRC staff proposes to determine that the amendment request involves no significant hazards consideration.

The Commission is seeking public comments on this proposed determination. Any comments received within 30 days after the date of publication of this notice will be considered in making any final determination.

Normally, the Commission will not issue the amendments until the expiration of the 30-day notice period. However, should circumstances change during the notice period such that failure to act in a timely way would result, for example, in derating or shutdown of the facility, the Commission may issue the license amendments before the expiration of the 30-day notice period, provided that its final determination is that the amendments involve no significant hazards consideration. The final determination will consider all public and State comments received. Should the Commission take this action, it will publish in the **Federal Register** a notice of issuance and provide for opportunity for a hearing after issuance. The Commission expects that the need to take this action will occur very infrequently.

Written comments may be submitted by mail to the Rules Review and Directives Branch, Division of Freedom of Information and Publications Services, Office of Administration, U.S. Nuclear Regulatory Commission, Washington, DC 20555, and should cite the publication date and page number of this **Federal Register** notice. Written comments may also be delivered to Room 6D22, Two White Flint North, 11545 Rockville Pike, Rockville, Maryland, from 7:30 a.m. to 4:15 p.m. Federal workdays. Copies of written comments received may be examined at the NRC Public Document Room, the Gelman Building, 2120 L Street, NW., Washington, DC.

The filing of requests for hearing and petitions for leave to intervene is discussed below.

By February 6, 1995, the licensee may file a request for a hearing will respect to issuance of the amendments to the subject facility operating license and any person whose interest may be affected by this proceeding and who wishes to participate as a party in the proceeding must file a written request for a hearing and a petition for leave to intervene. Requests for a hearing and a petition for leave to intervene shall be filed in accordance with the Commission's ''Rules of Practice for Domestic Licensing Proceedings'' in 10 CFR Part 2. Interested persons should

consult a current copy of 10 CFR 2.714 which is available at the Commission's Public Document Room, the Gelman Building, 2120 L Street, NW., Washington, DC, and at the local public document room located at the Phoenix Public Library, 12 East McDowell Road, Phoenix, Arizona 85004. If a request for a hearing or petition for leave to intervene is filed by the above date, the Commission or an Atomic Safety and Licensing Board, designated by the Commission or by the Chairman of the Atomic Safety and Licensing Board Panel, will rule on the request and/or petition; and the Secretary or the designated Atomic Safety and Licensing Board will issue a notice of hearing or an appropriate order.

As required by 10 CFR 2.714, a petition for leave to intervene shall set forth with particularity the interest of the petitioner in the proceeding, and how that interest may be affected by the results of the proceeding. The petition should specifically explain the reasons why intervention should be permitted with particular reference to the following factors: (1) the nature of the petitioner's right under the Act to be made party to the proceeding; (2) the nature and extent of the petitioner's property, financial, or other interest in the proceeding; and (3) the possible effect of any order which may be entered in the proceeding on the petitioner's interest. The petition should also identify the specific aspect(s) of the subject matter of the proceeding as to which petitioner wishes to intervene. Any person who has filed a petition for leave to intervene or who has been admitted as a party may amend the petition without requesting leave of the Board up to 15 days prior to the first prehearing conference scheduled in the proceeding, but such an amended petition must satisfy the specificity requirements described above.

Not later than 15 days prior to the first prehearing conference scheduled in the proceeding, a petitioner shall file a supplement to the petition to intervene which must include a list of the contentions which are sought to be litigated in the matter. Each contention must consist of a specific statement of the issue of law or fact to be raised or controverted. In addition, the petitioner shall provide a brief explanation of the bases of the contention and a concise statement of the alleged facts or expert opinion which support the contention and on which the petitioner intends to rely in proving the contention at the hearing. The petitioner must also provide references to those specific sources and documents of which the petitioner is aware and on which the petitioner intends to rely to establish those facts or expert opinion. Petitioner must provide sufficient information to show that a genuine dispute exists with the applicant on a material issue of law or fact. Contentions shall be limited to matters within the scope of the amendments under consideration. The contention must be one which, if proven, would entitle the petitioner to relief. A petitioner who fails to file such a supplement which satisfies these requirements with respect to at least one contention will not be permitted to participate as a party.

Those permitted to intervene become parties to the proceeding, subject to any limitations in the order granting leave to intervene, and have the opportunity to participate fully in the conduct of the hearing, including the opportunity to present evidence and cross-examine witnesses.

If a hearing is requested, the Commission will make a final determination on the issue of no significant hazards consideration. The final determination will serve to decide when the hearing is held.

If the final determination is that the amendment request involves no significant hazards consideration, the Commission may issue the amendments and make it immediately effective, notwithstanding the request for a hearing. Any hearing held would take place after issuance of the amendments.

If the final determination is that the amendment request involves a significant hazards consideration, any hearing held would take place before the issuance of any amendment.

A request for a hearing or a petition for leave to intervene must be filed with the Secretary of the Commission, U.S. Nuclear Regulatory Commission, Washington, DC 20555, Attention: Docketing and Services Branch, or may be delivered to the Commission's Public Document Room, the Gelman Building, 2120 L Street, NW., Washington, DC, by the above date. Where petitions are filed during the last 10 days of the notice period, it is requested that the petitioner promptly so inform the Commission by a toll-free telephone call to Western Union at 1–(800) 248–5100 (in Missouri 1–(800) 342–6700). The Western Union operator should be given Datagram Identification Number N1023 and the following message addressed to Theodore R. Quay: petitioner's name and telephone number, date petition was mailed, plant name, and publication date and page number of this **Federal Register** notice. A copy of the petition should also be sent to the Office of the General Counsel, U.S. Nuclear Regulatory Commission, Washington, DC 20555, and to Nancy C. Loftin, Esq., Corporate Secretary and Counsel, Arizona Public Service Company, P.O. Box 53999, Mail Station 9068, Phoenix, Arizona 85072–3999, attorney for the licensee.

Nontimely filings of petitions for leave to intervene, amended petitions, supplemental petitions and/or requests for hearing will not be entertained absent a determination by the Commission, the presiding officer or the presiding Atomic Safety and Licensing Board that the petition and/or request should be granted based upon a balancing of the factors specified in 10 CFR 2.714(a)(1) (i)–(v) and 2.714(d).

For further details with respect to this action, see the application for amendment dated October 31, 1994, as supplemented by letter dated December 28, 1994, which are available for public inspection at the Commission's Public Document Room, the Gelman Building, 2120 L Street, NW., Washington, DC, and at the local public document room located at the Phoenix Public Library, 12 East McDowell Road, Phoenix, Arizona 85004.

Dated at Rockville, Maryland, this 3rd day of January 1995.

For the Nuclear Regulatory Commission.

Linh N. Tran,

Project Manager, Project Directorate IV–2, Division of Reactor Projects III/IV, Office of Nuclear Reactor Regulation.

[FR Doc. 94–319 Filed 1–5–95; 8:45 am]

BILLING CODE 7590–01–M

[Docket No. 50–440]

The Cleveland Electric Illuminating Co., et al.; Environmental Assessment and Finding of No Significant Impact

The U.S. Nuclear Regulatory Commission (the Commission) is considering issuance of an amendment to Facility Operating License No. NPF–58, issued to the Cleveland Electric Illuminating Company, Centerior Service Company, Duquesne Light Company, Ohio Edison Company, Pennsylvania Power Company, and Toledo Edison Company (the licensee), for operation of the Perry Nuclear Power Plant, Unit No. 1, located in Lake County, Ohio.

Environmental Assessment

Identification of the Proposed Action

The proposed amendment will replace the existing Technical Specifications (TS), in their entirety, with the Improved Technical Specification (ITS). The proposed action is in accordance with the licensee's amendment request dated December 16,

1993, as supplemented November 7, 1994.

The Need for the Proposed Action

It has been recognized that nuclear safety in all plants would benefit from improvement and standardization of TS. The ''NRC Interim Policy Statement on Technical Specification Improvements for Nuclear Power Reactors,'' (**Federal Register** 52 FR 3788, February 6, 1987) and later the Final Policy Statement, formalized this need. To facilitate the development of individual ITS, each reactor vendor owners' group (OG) and the NRC staff, developed standard Technical Specifications. For General Electric (GE) plants, the standard TS (STS) are NUREG–1433 for BWR/4 reactor facilities and NUREG–1434 for BWR/6 facilities. NUREG–1434 formed the basis of the Perry ITS. The NRC Committee to Review Generic Requirements (CRGR) reviewed the STS and made note of the safety merits of the STS and indicated its support of conversion by operating plants to the STS.

Description of the Proposed Change

The proposed revision to the TS is based on NUREG–1434, and on guidance provided in the Policy Statement. Its objective is to completely rewrite, reformat, and streamline the existing TS. Emphasis is placed on human factors' principles to improve clarity and understanding. The Bases section has been significantly expanded to clarify, and better explain the purpose and foundation of each specification. In addition to NUREG–1434, portions of the existing TS were also used as the basis for the ITS. Plant-specific issues (unique design features, requirements, and operating practices) were discussed at length with the licensee, and generic matters with the GE and other OGs.

The proposed changes from the existing TS can be grouped into four general categories, as follows:

1. Non-technical (administrative) changes, which were intended to make the ITS easier to use for plant operations personnel. They are purely editorial in nature, or involve the movement or reformat of requirements without affecting technical content. Every section of the Perry TS has undergone these types of changes. In order to ensure consistency, the NRC staff and the licensee have used NUREG–1434 as guidance to reformat and make other administrative changes.

2. Relocation of requirements, which includes items that were in the existing Perry TS, but did not meet the criteria set forth in the Policy Statement for inclusion in TS. In general, the proposed relocation of items in the Perry TS to the Updated Safety Analysis report (USAR), appropriate plant-specific programs, procedures and ITS Bases, follows the guidance of the BWR/6 STS, NUREG–1434. Once these items have been relocated, by removing them from the TS to other licensee-controlled documents, the licensee may revise them under the provisions of 10 CFR 50.59 or other NRC staff-approved control mechanisms, which provide appropriate procedural means to control changes.

3. More restrictive requirements, which consist of proposed Perry ITS items that are either more conservative than corresponding requirements in the existing Perry TS, or are additional restrictions, which are not in the existing Perry TS, but are contained in NUREG–1434. Examples of more restrictive requirements include: placing a Limiting Conditions for Operation (LCO) on plant equipment, which is not required by the present TS to be operable; more restrictive requirements to restore inoperable equipment; and more restrictive surveillance requirements.

4. Less restrictive requirements, which are relaxations of corresponding requirements in the existing Perry TS, which provided little or no safety benefit, and placed unnecessary burden on the licensee. These relaxations were the result of generic NRC action or other analyses. They have been justified on a case-by-case basis for Perry, as described in the Safety Evaluation to be issued with the license amendment, which will be noticed in the **Federal Register**.

Environmental Impacts of the Proposed Action

The Commission has completed its evaluation of the proposed revision to the TS. Changes which are administrative in nature have been found to have no effect on technical content of the TS, and are acceptable. The increased clarity and understanding these changes bring to the TS, are expected to improve the operator's control of the plant in normal and accident conditions.

Relocation of requirements to other licensee-controlled documents does not change the requirements themselves. Future changes to these requirements may be made by the licensee, under 10 CFR 50.59, or other NRC-approved control mechanisms, which assures continued maintenance of adequate requirements. All such relocations have been found to be in conformance with the guidelines of NUREG–1434 and the Policy Statement, and, therefore, to be acceptable.

Changes involving more restrictive requirements have been found to be acceptable.

Changes involving less restrictive requirements have been reviewed individually. When requirements have been shown to provide little or no safety benefit, or to place unnecessary burden on the licensee, their removal from the TS was justified. In most cases, relaxations previously granted to individual plants, on a plant-specific basis, were the result of a generic NRC action, or of agreements reached during discussions with the OG and found to be acceptable for Perry. Generic relaxations contained in NUREG–1434 have also been reviewed by the NRC staff and have been found to be acceptable.

In summary, the proposed revision to the TS has been found to provide control of plant operations, such that reasonable assurance will be provided that the health and safety of the public will be adequately protected. These TS changes will not increase the consequences of accidents, no changes are being made in the types of any effluent that may be released offsite, and there is no significant increase in the allowable individual or cumulative occupational radiation exposure.

Therefore, the Commission concludes that there are no significant radiological environmental impacts associated with the proposed TS amendment.

With regard to potential non-radiological impacts, the proposed amendment involves features located entirely within the restricted areas as defined in 10 CFR 20. It does not affect non-radiological plant effluents and has no other environmental impact. Therefore, the Commission concludes that there are no significant non-radiological impacts associated with the proposed amendment.

Alternatives to the Proposed Action

Since the Commission has concluded there is no measurable environmental impact associated with the proposed amendment, any alternatives with equal or greater environmental impact need not be evaluated. The principal alternative to the amendment would be to deny the amendment request. Such action would not enhance the protection of the environment.

Alternative Use of Resources

This action does not involve the use of resources not considered previously in the Final Environmental Statement for the Perry Nuclear Power Plant, Unit 1.

Agencies and Persons Consulted

The NRC staff consulted with the State of Ohio regarding the environmental impact of the proposed action. The State official had no comments.

Finding of No Significant Impact

Based upon the environmental assessment, the Commission concludes that the proposed action will not have a significant effect on the quality of the human environment. Accordingly, the Commission has determined not to prepare an environmental impact statement for the proposed amendment.

For futher details with respect to this proposed action, see the licensee's letters dated December 16, 1993 (PY–CEI/NRR–1732 L), and November 7, 1994 (PY–CEI/NRR–1880 L). These letters are available for public inspection at the Commission's Public Document room, the Gelman Building, 2120 L Street, NW, Washington, DC, and at the local public document room located at the Perry Public Library, 3753 Main Street, Perry, Ohio 44081.

Dated at Rockville, Maryland this 30th day of December 1994.

For the Nuclear Regulatory Commission.

Leif J. Norrholm,

Director, Project Directorate III–3, Division of Reactor Projects III/IV, Office of Nuclear Reactor Regulation.

[FR Doc. 95–318 Filed 1–5–95; 8:45 am]

BILLING CODE 7590–01–M

SECURITIES AND EXCHANGE COMMISSION

[Rel. No. IC–20808; File No. 812–9122]

The Ohio National Life Insurance Co., et al.

December 29, 1994.

AGENCY: Securities and Exchange Commission (''SEC'' or the ''Commission'').

ACTION: Notice of Application for an order under the Investment Company Act of 1940 (the ''1940 Act'').

APPLICANTS: The Ohio National Life Insurance Company (the ''Company''), Ohio National Variable Account D (''VAD''), and The O.N. Equity Sales Company (''ONESCO''), collectively, the ''Applicants.''

RELEVANT 1940 ACT SECTIONS: Order requested under Section 6(c) of the 1940 Act, granting exemptions from Sections 26(a)(2)(C) and 27(c)(2) thereof.

SUMMARY OF APPLICATION: Applicants seek an order to the extent necessary to permit the issuance and sale of certain group variable annuity contracts offered presently (the ''Contracts'') or in the future through existing and future subaccounts of VAD, from which a mortality and expense risk charge and/or a distribution charge may be deducted.

FILING DATE: The application was filed initially on July 20, 1994. An amended and restated application was filed on December 20, 1994.

HEARING OR NOTIFCATION OF HEARING: An order granting the application will be issued unless the Commission orders a hearing. Interested persons may request a hearing on the application by writing to the Secretary of the Commission and serving the Applicants with a copy of the request, either personally, or by mail. Hearing requests must be received by the Commission by 5:30 p.m. on January 23, 1995, and should be accompanied by proof of service on the Applicants in the form of an affidavit or, for lawyers, by certificate. Hearing requests should state the nature of the interest, the reason for the request, and the issues contested. Persons may request notification of the date of a hearing by writing to the Secretary of the Commission.

ADDRESSES: Secretary, SEC, 450 5th Street, NW., Washington, DC 20549. Applicants, 237 William Howard Taft Road, Cincinnati, OH 45219.

FOR FURTHER INFORMATION CONTACT: Patrice M. Pitts, Attorney, at (202) 942–0670, Office of Insurance Products, Division of Investment Management.

SUPPLEMENTARY INFORMATION: The following is a summary of the application. The complete application is available for a fee from the Public Reference Branch of the SEC.

Applicants' Representations

1. The Company was organized under the laws of Ohio in 1909 as a stock life insurance company, and became a mutual life insurance company in 1959. The Company writes life, accident and health insurance, and annuities in 45 states and the District of Columbia.

2. Established by the Company in 1969 as a separate account under Ohio law, VAD funds group variable annuity contracts (including the Contracts). Income, gains and losses, whether or not realized, from assets allocated to VAD are credited to or charged against VAD without regard to other income, gains or losses of the Company. The assets maintained in VAD will not be charged with any liabilities arising out of any other business conducted by the Company. Nevertheless, all obligations arising under the variable annuity contracts funded by VAD, including the commitment to make annuity payments, are general corporate obligations of the Company. Accordingly, all of the Company's assets are available to meet its obligations under those variable annuity contracts. VAD is registered as a unit investment trust under the 1940 Act.

3. ONESCO, a wholly-owned subsidiary of the Company, is a registered broker-dealer and a member of the National Association of Securities Dealers, Inc. ONESCO is the principal underwriter of the Contracts.

4. The Contracts are group variable annuity contracts that provide for the accumulation of values and the payment of annuity benefits on a variable and/or fixed basis. The Contracts are designed for the following types of tax-qualified retirement plans (''Plans''): (a) annuity purchase plans adopted by public school systems or by certain tax-exempt organizations which qualify for tax-deferred treatment pursuant to Section 403(b) of the Internal Revenue Code (the ''Code''); (b) other employee pension or profit-sharing trusts or plans which qualify for tax-deferred treatment under Section 401(a), 401(k) or 403(a) of the Code; and (c) state and municipal deferred compensation plans.

5. The minimum contribution amount under each Contract is $25 per Plan participant. Additional contributions may be made at any time, but not more often than biweekly. Generally, maximum contributions under the Contracts equal the maximum amounts permitted under the respective Plan.

6. Net purchase payments under the Contracts (after deduction of any applicable state premium tax) are allocated to one or more subaccounts of VAD and/or to the Company's general account. Assets of the subaccounts of VAD are invested in shares of a corresponding portfolio of Ohio National Fund, Inc., a mutual fund having seven diversified investment portfolios. Additional subaccounts may be created by VAD in the future to invest in new investment portfolios of Ohio National Fund, Inc., or in investment portfolios of other investment companies. In the future, VAD also may offer additional variable annuity contracts (the ''future contracts'') which are materially similar to the Contracts.

7. The Company will assess an administration expense charge, on an annual basis, to 0.35 percent of Contract value. The expenses reimbursed by the administration charge include, but are not limited to, those for: accounting, auditing, legal, and Contract owner services; reports to regulatory authorities and Contract owners; and

issuing Contracts. The Company will assess a charge of $5 for each transfer of Contract value among the various subaccounts.

8. The administration expense and transfer charges will be deducted from VAD assets in reliance upon Rules 26a–1 and 11a–2 under the 1940 Act, and no relief is requested in connection with the deduction of those charges. Neither of these charges is designed to produce a profit, but rather to reimburse the Company for expenses incurred.

9. When applicable, the Company will deduct state premium taxes. Where permitted, the Company will assess a premium tax charge when annuity payments begin; otherwise, a premium tax charge will be deducted from premium payments. The Company will deduct a premium tax charge in reliance on Rule 26a–2 of the 1940 Act and, therefore, requests no relief connection with the deduction of such a charge.

10. The Company will assess a contingent deferred sales charge (''CDSC'') for partial withdrawals or surrenders in the first seven years after a Plan participant's account has been established under the Contract. The CDSC will be deducted as a percentage of the amount withdrawn, and declines from 7 percent in the first year to 1 percent in the seventh year.

11. The prospectuses for the Contracts will disclose that, to the extent that the amount of the CDSC received by the Company is insufficient to recover the fees paid to ONESCO for sales commissions, any deficiency will be made up from the assets in the general account of the Company. Those general account assets include, among other things, any profit from mortality and expense risk charges. The CDSC will be deducted in reliance on Rule 6c–8 under the 1940 Act.

12. The Contracts provide that the Company has the right to deduct up to 0.40 percent of contract value, on an annual basis, for distribution expenses. This ''distribution charge'' is designed to compensate the Company for assuming the risk that the cost of distributing the Contracts will exceed the revenues from the CDSC. Whether the Applicants actually impose a distribution charge depends upon their assessment of the profitability of selling and administering the Contracts without such a charge. If sufficient sales levels are achieved without the charge, there may be no need to impose the charge, or at least no need to impose it at the maximum (0.40 percent) rate.

13. If and to the extent that a distribution charge is imposed, the Company will monitor VAD to ensure that aggregate deductions for distribution expense and sales charges deducted upon partial withdrawals or surrender do not exceed 9 percent of aggregate contributions to be made by or on behalf of any Plan participant.

14. Although the distribution charge will not be imposed initially and may never be imposed, the prospectus for the Contracts will include a description of the distribution expense charge and a representation that aggregate deductions for distribution expense and sales charges deducted upon partial withdrawals or surrender will not exceed 9 percent of aggregate contributions made by any Contract owner.

15. The Company will assess a mortality and expense risks charge equal, on an annual basis, to 1 percent of Contract value. The Company estimates that 0.40 percent of the charge is for assumption of mortality risks, and 0.60 percent is for the assumption of expense risks. The Company hopes to realize a profit from this charge. If, however, the charge is insufficient to cover the actual mortality and expense risks involved, the loss will fall on the Company.

16. The mortality risk arises from the Company's guarantee that it will make annuity payments in accordance with annuity rate provisions established at the time the Contract is issued for the life of the annuitant, no matter how long the annuitant lives. The expense risk assumed by the Company is that the costs of administering the Contracts during the accumulation and annuity periods will exceed the amounts received from the administrative expense charge assessed by the Company.

17. Changes in annuity rates specified in a Contract may not be effected without the consent of the Contract holder unless a Contract has been in effect for at least 5 years *and* the Contract holder has been given 5 years' notice of the change; changes in annuity rates apply only to participant accounts established *after* the effective date of such changes. The administrative charge of 0.35 percent, the distribution charge of 0.40 percent, and the mortality and expense risks charge of 1 percent assessed under the Contracts may be modified during the first five years of a Contract only by written agreement with the Contract holder. Thereafter, changes in those charges may be made on any Contract anniversary, provided that the Contract holder is given 90 days notice of such changes. Any modification in adminstrative, distribution, and/or mortality and expense risks charges effected pursuant to a written agreement with the Contract holder would not affect the rights of a participant, contingent annuitant, or beneficiary in or to any annuity effected before the date of the modification, unless (i) the modification was necessary to secure a tax benefit for the Contract holder or the participants, or (ii) a ruling or determination by a court of law or a governmental agency indicated that the modification was necessary in order to satisfy the requirements of any law or regulation administered by that agency. Because the order requested herein would permit deduction of mortality and expense risks charges of up to 1 percent, additional exemptive relief would be necessary to increase the mortality and expense risk charge in excess of that amount. The Contracts also provide that the mortality and expense risks charge may not be increased more frequently than once per year, and that the sum of the mortality and expense risks charge, the distribution charge, and the administrative charge may never exceed 2 percent.

Applicants' Legal Analysis

1. The Applicants request that the Commission, under Section 6(c) of the 1940 Act, grant exemptions from Sections 26(a)(2)(C) and 27(c)(2) thereof to the extent necessary to permit the issuance and sale of Contracts and any future contracts funded by existing and future subaccounts of VAD, from which a mortality and expense risk charge and/or a distribution charge may be deducted.

2. Section 6(c) of the 1940 Act provides, in pertinent part, that the Commission, by order upon application, may conditionally or unconditionally exempt any person, security, or transaction, or any class or classes thereof, from any provision of the 1940 Act or any rule or regulation thereunder, if and to the extent that the exemption is necessary or appropriate in the public interest and consistent with the protection of investors and the purposes fairly intended by the policy and provisions of the 1940 Act.

3. The Applicants submit that extending the requested relief to future subaccounts of VAD and to the future contracts is appropriate in the public interest. Such an order would eliminate the need for the Company to file redundant exemptive applications, thereby reducing its administrative expenses and maximizing the efficient use of its resources. Both the delay and expense of repeatedly seeking exemptive relief in connection with new subaccounts or in connection with materially similar contracts would impair the ability of the Company to

take effective advantage of business opportunities that might arise. Investors would not receive any benefit or additional protection by requiring the company to seek exemptive relief repeatedly with respect to the issues addressed in this application.

4. Sections 26(a)(2)(C) and 27(c)(2) of the 1940 Act require, among other things, that all payments received under a periodic payment plan certificate sold by a registered unit investment trust, any depositor thereof or underwriter therefor be held by a qualified bank as trustee or custodian, under arrangements which prohibit any payment to the depositor or principal underwriter except for the payment of a fee, not exceeding such reasonable amount as the Commission may prescribe, for bookkeeping and other administrative services.

5. The Applicants submit that the Company is entitled to reasonable compensation for its assumption of mortality and expense risks under the Contracts, and represent that the mortality and expense risks charge of 1.00 percent per annum proposed for the Contracts is within the range of industry practice for comparable variable annuity products. The Applicants represent that this representation is based upon an analysis made by the Company of publicly available information about selected similar industry products, taking into consideration such factors as annuity purchase rate guarantees, current levels of charges, any contractual right to increase charges above current levels, the existence of other charges, and the contractual right to make free withdrawals. The Company will maintain at its home office, and make available to the Commission, memoranda setting forth the products analyzed in the course of, and the methodology and results of, the comparative survey conducted.

6. Applicants acknowledge that the Company's revenues from the CDSC and distribution charge (if any) assessed under the Contracts could be insufficient to cover the costs of distributing the Contracts. If so, the excess distribution costs would be paid from the Company's general assets, including the profits (if any), from the mortality and expense risks charge assessed. In such circumstances, a portion of the mortality and expense risks charge might be viewed as covering a portion of the costs relating to the distribution of the Contracts.

7. The Applicants submit that, notwithstanding the foregoing, the Company has concluded that there is a reasonable likelihood that the proposed distribution financing arrangements made with respect to the Contracts will benefit VAD and the contract owners. The basis for that conclusion is set forth in a memorandum which will be maintained by the Company at its service office and will be available to the Commission.

8. The Company represents that VAD will invest only in underlying mutual funds which have undertaken to have a board of directors, a majority of the members of which are not ''interested persons'' of that fund (within the meaning of Section 2(a)(19) of the 1940 Act), formulate and approve any plan to finance distribution expenses in accordance with Rule 12b–1 under the 1940 Act.

9. Applicants submit that, because the aggregate distribution charges (if any) and sales charges will never exceed 9 percent, Applicants will deduct no more to pay for distribution of the Contracts than is permitted by the 1940 Act and Rule 6c–8 thereunder. Because those charges will be deducted from Contract value over a period of many years, rather than from contributions to the Plans, Plan participants will have more funds available for investment than if a front-end sales charge of 9 percent were deducted.

Conclusion

The Applicants submit that, for the reasons and upon the facts set forth above, the requested exemptions from Sections 26(a)(2)(C) and 27(c)(2) of the 1940 Act to permit the deduction of a mortality and expense risks charge and/or a distribution charge under the Contracts and the future contracts funded through existing and future subaccounts of VAD meet the statutory standards of Section 6(c) of the 1940 Act. Accordingly, the Applicants assert that the requested exemptions are appropriate in the public interest and consistent with the protection of investors and the purposes fairly intended by the policy and provisions of the 1940 Act.

For the Commission, by the Division of Investment Management, under delegated authority.

Margaret H. McFarland,

Deputy Secretary.

[FR Doc. 95–295 Filed 1–5–95; 8:45 am]

BILLING CODE 8010–01–M

[Rel. No. IC–20811; 812–9346]

A.T. Ohio Municipal Money Fund and The Victory Funds; Notice of Application

December 29, 1994.

AGENCY: Securities and Exchange Commission (''SEC'').

ACTION: Notice of application for exemption under the Investment Company Act of 1940 (the ''Act'').

APPLICANTS: A.T. Ohio Municipal Money Fund (''A.T. Ohio'') and the Victory Funds (the ''Fund'').

RELEVANT ACT SECTIONS: Exemption requested under section 6(c) from rule 24f–2 under the Act.

SUMMARY OF APPLICATION: A.T. Ohio and the Fund request an order to permit them to pay a share registration fee due under rule 24f–2 for their fiscal years ending August 30, 1994 and August 31, 1994, respectively, based on net sales, *i.e.,* new sales minus redemptions, rather than on gross sales, *i.e.,* with no credit for redemptions.

FILING DATE: The application was filed on December 7, 1994.

HEARING OR NOTIFICATION OF HEARING: An order granting the application will be issued unless the SEC orders a hearing. Interested parties may request a hearing by writing to the SEC's Secretary and serving applicant with a copy of the request, personally or by mail. Hearing requests should be received by the SEC by 5:30 p.m. on January 23, 1995, and should be accompanied by proof of service on applicant, in the form of an affidavit or, for lawyers, a certificate of service. Hearing requests should state the nature of the writer's interest, the reason for the request, and the issues contested. Persons may request notification of a hearing by writing to the SEC's Secretary.

ADDRESSES: Secretary, SEC, 450 5th Street, NW., Washington, DC 20549. Applicants, 125 West 55th Street, New York, New York 10019.

FOR FURTHER INFORMATION CONTACT: Fran Pollack-Matz, Senior Attorney, at (202) 942–0570, or Robert A. Robertson, Branch Chief, at (202) 942–0564 (Division of Investment Management, Office of Investment Company Regulation).

SUPPLEMENTARY INFORMATION: The following is a summary of the application. The complete application may be obtained for a fee at the SEC's Public Reference Branch.

APPLICANTS' REPRESENTATIONS: 1. A.T. Ohio and the Fund, registered open-end investment companies, each filed declarations pursuant to rule 24f–2

under the Act to register an indefinite amount of shares under the Securities Act of 1933.

2. An investment company that has filed a declaration under rule 24f–2 must file annual notices with the SEC and pay share registration fees for shares sold in the previous fiscal year. If the rule 24f–2 notice is filed within two months after the close of the investment company's fiscal year, the amount of the registration fee is based on net sales (new sales minus redemptions) in the year in question. If the rule 24f–2 notice is not filed within two months, the registration fee is based on gross sales (with no credit for redemptions). At the latest, the rule 24f–2 notice along with the appropriate registration fee must be filed within six months after the end of an investment company's fiscal year. A.T. Ohio's fiscal year ends August 30, and the Fund's fiscal year ends August 31.

3. A.T. Ohio transferred all of its assets to the Ohio Municipal Money Market Portfolio (the ''Portfolio'') of the Fund on August 30, 1994. The Portfolio was established to continue the operations of A.T. Ohio as a series portfolio of the Fund. Applicants assert that there was uncertainty as to how the applicants' fees should be calculated because of the reorganization. Thus, the amounts of the registration fees were unsettled until after the New York banks were closed October 28, 1994, and applicants' administrator had to obtain a certified check in the amount of the Fund's net fee payment on October 31, 1994, the last day of the two month filing deadline.

4. A.T. Ohio and the Fund submitted their rule 24f–2 notices for the fiscal year ending August 30 and 31, 1994, respectively, to a same day courier service on October 31, 1994. Because A.T. Ohio had net redemptions during the fiscal year, no registration fee was due with the 24f–2 notice. The Fund, however, had net sales during the fiscal year. That notice, therefore, was accompanied by $109,700.69, the fee payable to register the shares sold by the Fund in excess of redemptions. The filing arrived at the SEC's filing desk after 5:30 p.m. on October 31, 1994. As a result, the filing was made on November 1, 1994, but was rejected as having been filed too late to be eligible for a registration fee based on net sales. Thus, absent relief, applicants owe registration fees based on gross sales. For A.T. Ohio's fiscal year ending August 30, 1994, this would amount to an additional $429,084.50 and for the Fund's fiscal year ending August 31, 1994 this would amount to an additional $1,997.07.

Applicants' Legal Analysis

1. Section 6(c) permits the SEC to exempt any person, security, or transaction from any provisions of the Act if and to the extent the exemption is necessary or appropriate in the public interest and consistent with the protection of investors and the purposes fairly intended by the policy and provisions of the Act. In addition, the SEC must find that an investment company was not at fault to grant an exemption from the two month filing deadline of rule 24f–2.[1]

2. A.T. Ohio and the Fund believe that they made a good faith effort to file the rule 24f–2 notices on a timely basis by same-day courier. Applicants state that the delay in receipt of their filings was caused by a series of delays precipitated by the same-day courier service.

3. Applicants believe that the requested relief meets the section 6(c) standards. Thus, applicants request an exemption under section 6(c) from rule 24f–2 to permit them to pay registration fees based on net sales.

For the Commission, by the Division of Investment Management, pursuant to delegated authority.

Margaret H. McFarland,

Deputy Secretary.

[FR Doc. 95–294 Filed 1–5–95; 8:45 am]

BILLING CODE 8010–01–M

[Release No. 34–35175; File No. SR–NYSE–94–49]

Self-Regulatory Organizations; New York Stock Exchange, Inc.; Notice of Filing and Order Granting Accelerated Approval of a Proposed Rule Change Relating to a Six-Month Extension of the Pilot for the Capital Utilization Measure of Specialist Performance

December 29, 1994.

Pursuant to Section 19(b)(1) of the Securities Exchange Act of 1934, (''Act'')[1] and Rule 19b–4 thereunder,[2] notice is hereby given that on December 22, 1994, the New York Stock Exchange, Inc. (''NYSE'' or ''Exchange'') filed with the Securities and Exchange Commission (''SEC'' or ''Commission'') the proposed rule change as described in Items I, II and III below, which Items have been prepared by the self-regulatory organization. The Commission is publishing this notice to solicit comments on the proposed rule change from interested persons.

I. Self-Regulatory Organization's Statement of the Terms of Substance of the Proposed Rule Change

The proposed rule change consists of extending for six months the pilot to use a measure of specialist performance which focuses on a specialist unit's use of its own capital in relation to the total dollar volume of trading activity in the unit's stocks. This capital utilization measure (described in detail below) would be used by the Allocation Committee (''Committee'') in allocating newly-listed stocks.

II. Self-Regulatory Organization's Statement of the Purpose of, and Statutory Basis for, the Proposed Rule Change

In its filing with the Commission, the NYSE included statements concerning the purpose of and basis for the proposed rule change and discussed any comments it received on the proposed rule change. The text of these statements may be examined at the places specified in Item IV below and is set forth in Sections A, B and C below.

A. Self-Regulatory Organization's Statement of the Purpose of, and Statutory Basis for, the Proposed Rule Change

1. Purpose

In recognition of the importance of dealer participation, particularly in volatile markets when such participation is viewed as providing ''value added'' in maintaining fair and orderly markets, the Exchange has developed a measure of specialist performance dealing with utilization of capital for market-making. This measure of performance focuses on a specialist unit's use of its own capital in relation to the total dollar value of trading activity in the unit's stocks.

On December 22, 1993, the Commission approved, on a pilot basis ending December 31, 1994, the Exchange's proposed rule change to adopt capital utilization as an additional measure of specialist performance.[3] The Exchange is now seeking to extend that pilot for an additional six months, through June 30, 1995.

Under the pilot, a capital utilization percentage is derived for each eligible stock[4] and the specialist unit overall by

[1] *See* Decision of the Comptroller General of the United States, File No. B–239769.2 (July 24, 1992).

[1] 15 U.S.C. 78s(b)(1) (1988).

[2] 17 CFR 240.19b–4 (1991).

[3] See Securities Exchange Act Release No. 33369 (December 22, 1993), 58 FR 69431 (File No. SR–NYSE–93–30).

[4] The following are not included in any grouping of eligible stocks: foreign stocks, preferred stocks,

Continued

dividing the average daily dollar value of the unit's stabilizing purchases and sales by the average daily total dollar value of shares traded in the unit's stocks. This percentage is calculated both for stabilizing trades only and stabilizing plus reliquefying trades. (A reliquefying transaction is one in which the specialist reduces a position in a specialty stock by selling part of a long position on a zero-minus tick, or purchasing to cover part of a short position on a zero-plus tick.) These percentages are provided for base periods (*ie.*, non-volatile periods) and volatile periods (days when there is a change of one percent or more in the S&P 500 Stock Price Index),[5] and each stock's ten percent most volatile days,[6] so that performance of a unit relative to other units can be compared as to volatile and non-volatile market conditions.

The capital utilization measure separates stocks into three broad groupings including:

- Stocks included in the top 200 stocks in the S&P 500 Stock Price Index and other stocks that are at least as active (based on average daily dollar value of shares traded).
- The remainder of the S&P 500 and any stocks among the 500 most active on the Exchange.
- All other stocks.

Specialist units are placed alphabetically into three tiers based on their base day and volatile day capital utilization percentages for each of the three groupings of stocks. Within each grouping, a Floor-wide mean capital utilization percentage is calculated. A unit will be in Tier 1 if its capital utilization percentage is more than 1.1 standard deviations above the mean. (A standard deviation is a statistical measure of the distance from the mean.) A unit will be in Tier 2 if its capital utilization percentage is within 1.1 standard deviations above or below the mean. A unit will be in Tier 3 if its capital utilization percentage is more than 1.1 standard deviations below the mean.

During the past year, the Allocation Committee has received specialist capital utilization information on a ''rolling'' 12-month basis. The Allocation Committee has been given information as to a unit's tier in each stock grouping, with the tier data being included with other objective data, such as DOT turnaround performance, stabilization rates and TTV percentages. The specialist units themselves have been given, on a monthly basis for the prior 12 months, their actual capital utilization percentages for each stock.[7]

The Exchange implemented this new measure of specialist performance as a one-year pilot which is due to expire on December 31, 1994. In its July 25, 1994, report on the Allocation and Capital Utilization pilots, the Exchange reviewed the Committee's use of the capital utilization measure in allocation decisions. The measure appears to be a useful addition to the other measures of specialist performance referred to by the Committee. It is proposed that the pilot measure of specialist capital utilization be extended for an additional six months, through June 30, 1995, to be used by the Allocation Committee as described above.

2. Statutory Basis

The basis under the Act for the proposed rule change is the requirement under Section 6(b)(5) that an Exchange have rules that are designed to promote just and equitable principles of trade, to remove impediments to, and perfect the mechanism of a free and open market and, in general, to protect investors and the public interest.

B. Self-Regulatory Organization's Statement on Burden on Competition

The Exchange does not believe that the proposed rule change will impose any burden on competition that is not necessary or appropriate in furtherance of the purposes of the Act.

C. Self-Regulatory Organization's Statement on Comments on the Proposed Rule Change Received From Members, Participants or Others

The Exchange has neither solicited nor received written comments on the proposed rule change.

III. Solicitation of Comments

Interested persons are invited to submit written data, views, and arguments concerning the foregoing. Persons making written submissions should file six copies thereof with the Secretary, Securities and Exchange Commission, 450 Fifth Street, NW., Washington, DC 20549.

Copies of the submission, all subsequent amendments, all written statements with respect to the proposed rule change that are filed with the Commission, and all written communications relating to the proposed rule change between the Commission and any other person, other than those that may be withheld from the public in accordance with the provisions of 5 U.S.C. 552, will be available for inspection and copying in the Commission's Public Reference Section, 450 Fifth Street, NW., Washington, DC.

Copies of such filing will also be available for inspection and copying at the principal office of the NYSE. All submissions should refer to File No. SR–NYSE–94–49, and should be submitted by January 27, 1995.

IV. Commission's Findings and Order Granting Approval of Proposed Rule Change

The Commission finds that the proposed rule change is consistent with the requirements of the Act and the rules and regulations thereunder applicable to a national securities exchange, and in particular, with the requirements of Sections 6 and 11 of the Act. Section 6(v)(5) requires that the rules of an exchange be designed to promote just and equitable principles of trade, to prevent fraudulent and manipulative acts, and, in general, to protect investors and the public interest. Section 11(b) of the Act and Rule 11b–1 thereunder allow exchanges to promulgate rules relating to specialists in order to maintain fair and orderly markets. For the reasons set forth below, the Commission continues to believe that the consideration of specialist capital utilization by the Allocation Committee should enhance the Exchange's allocation process and encourage improved specialist performance, consistent with the protection of investors and the public interest.

---

warrants, when-issued stocks, IPOs (for the first 60 days), closed-end funds, stocks selling for $5 and under, stocks with less than 2,000 shares average daily trading volume, and stocks that have been delisted for more than six months.

[5] ''S&P 500 Stock Price Index'' is a service mark of Standard and Poor's Corporation.

The base period calculation includes the total average daily dollar value for the trading days within the twelve month period excluding those days during which there was a change of 1% or more in the S&P 500 Price Index. The volatile period calculation includes the total average daily dollar value for the trading days within the twelve month period during which there was a change of 1% or more in the S&P 500 Price Index.

[6] The base period calculation include the total average daily dollar value for the days within the twelve month trading period that were not among the 10% most volatile. The volatile period calculation includes the average daily dollar value for the days within the twelve month period that were the 10% most volatile.

[7] The specialist capital utilization measure is not being added as a basis for initiating a Performance Improvement Action under NYSE Rule 103A. During the pilot period, the Market Performance Committee will receive quarterly reports on the initiative, with a view toward their recommending such enhancements or modifications as may seem appropriate based on actual experience with this measure. Any modifications or enhancements would be filed with the Commission, and would be implemented only with the Commission's approval.

Specialists play a crucial role in providing stability, liquidity and continuity to the trading of securities. Among the obligations imposed upon specialists by the Exchange, and by the Act and rules thereunder, is the maintenance of fair and orderly markets in designated securities.[8] To ensure that specialists fulfill these obligations, it is important that the Exchange develop objective measures of specialist performance and prescribe stock allocation procedures and policies that encourage specialists to strive for optimal performance. The Commission supports the NYSE's effort to develop an objective measure of specialist capital utilization to encourage improved specialist performance and market quality.

The Commission believes that extending the pilot period for the specialist capital utilization tier ratings is appropriate because that standard should provide the NYSE Allocation Committee with an objective measure of specialist performance that will refine the Exchange's allocation process and thereby encourage improved specialist performance. The NYSE's Allocation Policy emphasizes that the most significant allocation criterion is specialist performance.[9] In the Commission's view, performance based stock allocations not only help to ensure that stocks are allocated to specialists who will make the best markets, but will provide an incentive for specialists to improve their performance or maintain superior performance.

For these reasons and for the other reasons discussed in Release No. 33369,[10] the Commission has determined to extend the pilot period for this measure through June 30, 1995. The Commission believes that extending the pilot period is appropriate because it will provide the Exchange and the Commission with an opportunity to further study the effects of the use of the measure on the NYSE's allocation process. During the pilot period, the Commission continues to expect the NYSE to monitor carefully the effects of the revised Allocation Policy and report its findings to the Commission. Specifically, the Commission request the NYSE report the capital utilization data as presented to the Allocation Committee in three tiers [11] and any action taken by the Allocation Committee.[12] The Commission also requests that the NYSE submit its monitoring report, as well as any requests for extension or permanent approval of the use of the capital utilization measure, by May 1, 1995.

The Commission finds good cause pursuant to Section 19(b)(2) of the Act for approving the proposed rule change prior to the thirtieth day after publication of the proposed rule change in the **Federal Register**. Accelerated approval will enable the Exchange to continue to make use of the capital utilization measure of specialist performance on an uninterrupted basis and will ensure continuity and consistency in the stock allocation deliberation process.

V. Conclusion

It is therefore ordered, pursuant to Section 19(b)(2) of the Act,[13] that the proposed rule change (File No. SR–NYSE–94–49) be approved through June 30, 1995.

For the Commission, by the Division of Market Regulation, pursuant to delegated authority.[14]

Margaret H. McFarland,

Deputy Secretary.

[FR Doc. 95–370 Filed 1–5–95; 8:45 am]

BILLING CODE 8010–01–M

[8] See, *e.g.,* Rule 11b–1, 17 CFR 240.11b–1 (1994); NYSE Rule 104.

[9] See, *e.g.,* Commission's order approving revisions to the NYSE's Allocation Policy and Procedures, Securities Exchange Act Release No. 34906 (October 27, 1994), 59 FR 55142.

[10] See note 3, *supra.*

[11] The Commission notes that this request for information is not exclusive an that the NYSE should add any additional data and analysis to the report in order to assess the effectiveness of the capital utilization measure.

[12] This information should include which stocks were reallocated due to performance, and the specialist units involved in each reallocation.

[13] 15 U.S.C. 78s(b)(2) (1988).

[14] 17 CFR § 200.30–3(a)(12) (1991).

[Release No. 34–35169; File No. SR–NASD–94–71]

Self-Regulatory Organizations; Notice of Filing of Proposed Rule Change by National Association of Securities Dealers, Inc. Relating to the Application of ''Do Not Reduce'' and ''Do Not Increase'' Instructions With Respect to the Repricing of Open Orders

December 28, 1994.

Pursuant to Section 19(b)(1) of the Securities Exchange Act of 1934 (''Act''), 15 U.S.C. 78s(b)(1), notice is hereby given that on December 7, 1994, the National Association of Securities Dealers, Inc. (''NASD'' or ''Association'') filed with the Securities and Exchange Commission (''SEC'' or ''Commission'') the proposed rule change as described in Items, I, II, and III below, which Items have been prepared by the NASD. The Commission is publishing this notice to solicit comments on the proposed rule change from interested persons.

I. Self-Regulatory Organization's Statement of the Terms of Substance of the Proposed Rule Change

The NASD is proposing to amend Article III, Section 46 of the Rules of Fair Practice. Below is the text of the proposed rule change. Proposed new language is italicized and proposed deletions are bracketed.

Adjustment of Open Orders

Sec. 46.

* * * * *

(e) The provisions of this rule shall not apply to: (1) orders governed by the rules of a registered national securities exchange; (2) orders marked ''do not reduce'' *where the dividend is payable in cash;* (3) orders marked ''do not increase[;]'' *where the dividend is payable in stock, provided that the price of such orders shall be adjusted as required by this rule;* (4) open stop orders to buy; (5) open sell orders; or (6) orders for the purchase or sale of securities where the issuer of the securities has not reported a dividend, payment or distribution pursuant to Securities and Exchange Commission Rule 10b–17.

II. Self-Regulatory Organization's Statement of the Purpose of, and Statutory Basis for, the Proposed Rule Change

In its filing with the Commission, the NASD included statements concerning the purpose of and basis for the proposed rule change and discussed any comments it received on the proposed rule change. The text of these statements may be examined at the places specified in Item IV below. The NASD has prepared summaries, set forth in Section (A), (B), and (C) below, of the most significant aspects of such statements.

(A) Self-Regulatory Organization's Statement of the Purpose of, and Statutory Basis for, the Proposed Rule Change

Article III, Section 46 of the Rules of Fair Practice, which became effective September 15, 1994, requires a member holding an open order, prior to executing or permitting the order to be executed, to adjust the price and size of the order in proportion to the dividend or other distribution, on the day that the security is quoted ex. Since the rule became effective, the NASD has discovered an inconsistency in the definition of the terms ''Do Not Reduce'' (DNR) and ''Do Not Increase'' (DNI) between the NASD's Section 46 and

NYSE Rule 118, on which Section 46 was patterned.

Under NYSE Rule 118, a DNR instruction applies only with respect to cash dividends; i.e., an order with a DNR instruction would be reduced in price and increased in size, in the event of a stock dividend or split, but would not be reduced in price in the event of a cash dividend. In addition, under NYSE Rule 118, a DNI instruction applies only with respect to stock dividends, i.e., an order with a DNI instruction would not be increased in size, but would be reduced in price, in the event of a stock dividend. Because Section 46 was intended to operate in the same manner as NYSE Rule 118, and the NASD has determined to amend the definitions of DNR and DNI to conform to the definitions in Rule 118.

For customers who understand the operation of Section 46 to be the same as NYSE Rule 118, leaving the current definitions in place could result in unexpected executions of open orders for such customers. For example, the price of an order marked DNR would not be adjusted under the current definition in Section 46 even in the event of a 2 for 1 or similar stock dividend, while applying NYSE Rule 118 would result in an adjustment. Such a dividend would halve the quotes for the security, but the order would remain at the original price, far out of line with the market for the security. Thus, the customer could be faced with a purchase execution at twice the new market price for the security, assuming that the original order was priced between the old bid and ask quotations. The apparent rationale behind limiting the application of the DNR instruction to cash dividends under NYSE Rule 118 (and the proposed amendment to Section 46) is that cash dividends are less likely to result in large quotation moves that would place an unadjusted order very far out of line with the market.

Similarly, consistent with Rule 118, a DNI instruction should apply only to order size adjustment in the event of a stock dividend. Because orders are only adjusted (increased) in size in a sock dividend situation, and price is never adjusted upward as a result of a distribution, a DNI instruction would operate to prevent the size of an order from being increased. This will prevent a customer from ending up with more shares than he wanted or intended. Moreover, because a DNI instruction only applies to the size of the order, the price of the order in a dividend situation will be adjusted downward as required by the rule.

The NASD believes that the proposed rule change is consistent with the provisions of Section 15A(b)(6) of the Act in that the clarification of the definitions of DNR and DNI will alleviate confusion, and order executions that may be harmful to investors, caused by the differences between Section 46 and NYSE Rule 118 and, thereby, remove an impediment to the functioning of the market and protect investors.

(B) Self-Regulatory Organization's Statement on Burden on Competition

The NASD does not believe that the proposed rule change will result in any burden on competition that is not necessary or appropriate in furtherance of the purposes of the Act, as amended.

(C) Self-Regulatory Organization's Statement on Comments on the Proposed Rule Change Received from Members, Participants, or Others

Written comments were neither solicited nor received.

Date of Effectiveness of the Proposed Rule Change and Timing for Commission Action

Within 35 days of the date of publication of this notice in the **Federal Register** or within such longer period (i) as the Commission may designate up to 90 days of such date if it finds such longer period to be appropriate and publishes its reasons for so finding or (ii) as to which the self-regulatory organization consents, the Commission will:

A. By order approve such proposed rule change, or

B. Institute proceedings to determine whether the proposed rule change should be disapproved.

IV. Solicitation of Comments

Interested persons are invited to submit written data, views, and arguments concerning the foregoing. Persons making written submissions should file six copies thereof with the Secretary, Securities and Exchange Commission, 450 Fifth Street, NW., Washington, DC 20549. Copies of the submission, all subsequent amendments, all written statements with respect to the proposed rule change that are filed with the Commission, and all written communications relating to the proposed rule change between the Commission and any person, other than those that may be withheld from the public in accordance with the provisions of 5 U.S.C. 552, will be available for inspection and copying in the Commission's Public Reference Room. Copies of such filing will also be available for inspection and copying at the principal office of the NASD. All submissions should refer to file number SR–NASD–94–71 and should be submitted by January 27, 1995.

For the Commission, by the Division of Market Regulation, pursuant to delegated authority.[1]

Margaret H. McFarland,

Deputy Secretary.

[FR Doc. 95–369 Filed 1–5–95; 8:45 am]

BILLING CODE 8010–01–M

[Rel. No. IC–20810; File No. 811–3645]

Pilgrim Corporate Utilities Fund: Notice of Application for Deregistration

December 29, 1994.

AGENCY: Securities and Exchange Commission (''SEC'').

ACTION: Notice of application for deregistration under the Investment Company Act of 1940 (''Act'').

APPLICANT: Pilgrim Corporate Utilities Fund.

RELEVANT ACT SECTION: Section 8(f).

SUMMARY OF APPLICATION: Applicant requests an order declaring that it has ceased to be an investment company.

FILING DATE: The application was filed on December 13, 1994.

HEARING OR NOTIFICATION OF HEARING: An order granting the application will be issued unless the SEC orders a hearing. Interested persons may request a hearing by writing to the SEC's Secretary and serving applicant with a copy of the request, personally or by mail. Hearing requests should be received by the SEC by 5:30 p.m. on January 23, 1995, and should be accompanied by proof of service on applicant, in the form of an affidavit, or for lawyers, a certificate of service. Hearing requests should state the nature of the writer's interest, the reason for the request, and the issues contested. Persons may request notification of a hearing by writing to the SEC's Secretary.

ADDRESSES: Secretary, SEC, 450 Fifth Street, NW., Washington, D.C. 20549. Applicant, 10100 Santa Monica Boulevard, Los Angeles, California 90067.

FOR FURTHER INFORMATION CONTACT: Bradley W. Paulson, Staff Attorney, at (202) 942–0147 or Robert A. Robertson, Branch Chief, at (202) 942–0564 (Division of Investment Management, Office of Investment Company Regulation).

---

[1] 17 CFR 200.30–3(a)(12).

SUPPLEMENTARY INFORMATION: The following is a summary of the application. The complete application is available for a fee from the SEC's Public Reference Branch.

Applicant's Representations

1. Applicant is an open-end management investment company organized as a corporation under the laws of California. On January 6, 1983, applicant registered under the Act and filed a registration statement to register its shares. The registration statement became effective on March 3, 1983, and applicant's initial public offering began on the same day.

2. On March 10, 1994, applicant's board of directors unanimously approved an agreement for the transfer of assets (the ''Agreement'') entered into by applicant and Lepercq-Istel Trust (the ''Company''), an open-end management investment company. The Agreement provides for the transfer of assets from applicant to the Company and for the liquidation of applicant. On July 27, 1994, shareholders holding 55.92% of applicant's outstanding shares approved the Agreement at a meeting called for that purpose.

3. Pursuant to the Agreement, on July 29, 1994, applicant transferred all of its assets and liabilities to the Company in exchange for shares of the Company. The exchange was based on the relative net asset value of applicant and the Company. Thereafter, securityholders of applicant became securityholders of the Company. On the date of the transfer, applicant had an aggregate of 803,193 shares outstanding, and immediately prior to the exchange, the per share net asset value of these shares was $6.89. No brokerage commission was paid in connection with the reorganization. The total expenses incurred in connection with the transfer of assets and liquidation of applicant, including legal fees, accounting fees, printing expenses, and mailing costs for the proxy solicitation were $35,000. These expenses were assumed and paid by Lepercq, de Neuflize & Co., Inc.

4. As of the date of the application, applicant had no securityholders, assets, or liabilities. Applicant is not a party to any litigation or administrative proceeding.

5. Applicant is not engaged in and does not propose to engage in any business activities other than those necessary for the winding-up of its affairs.

For the Commission, by the Division of Investment Management, pursuant to delegated authority.

Margaret H. McFarland,

Deputy Secretary.

[FR Doc. 95–371 Filed 1–5–95; 8:45 am]

BILLING CODE 8010–01–M

DEPARTMENT OF STATE

[Public Notice]

Shipping Coordinating Committee; Subcommittee on Safety of Life at Sea and Associated Bodies; Working Group on Flag State Implementation; Meeting

The Working Group on Flag State Implementation (FSI) of the Subcommittee on Safety of Life at Sea (SOLAS) will conduct an open meeting on January 31, 1995, at 1:00 p.m. in Room 2415 at Coast Guard headquarters, 2100 Second Street, SW, Washington, DC.

This will be the third meeting of this Working Group following establishment of the FSI Subcommittee. The purpose of the subcommittee is to identify ways to ensure effective and consistent global implementation of International Maritime Organization (IMO) instruments. At this meeting, the U.S. position on documents submitted for consideration at the third session of the FSI Subcommittee, scheduled for February 20–24, 1995, will be discussed.

Specific topics will include: casualty statistics and investigations, the role of the human element in maritime safety, port state control, flag state guidelines, measures to encourage compliance, and technical assistance.

Three U.S. papers will be discussed along with papers submitted as U.S. comments to intersessional correspondence groups. Each of these submissions is described below:

a. Two papers were submitted in response to questionnaires developed by IMO. The first provides general information about the Coast Guard Marine Safety program, including the structure, number of offices, and number of inspectors. The second provides information on the number and level of training of Port State Control Officers.

b. A paper was submitted recommending the development of a consolidated list of organizations authorized to issue International Safety Management (ISM) Code Certificates on behalf of administrations. The paper lists those organizations which the U.S. has authorized to perform these surveys and issue certificates for voluntary compliance.

c. The U.S. coordinated a correspondence group which dealt with amalgamating existing international port state control guidance into a single document, and expanding this guidance as necessary. The correspondence group developed a draft document, and an additional document proposing that each administration provide a single point of contract for port state control matters.

d. A paper was submitted providing comments to a correspondence group developing guidelines for the implementation of the International Safety Management (ISM) Code.

e. A paper was submitted providing comments to the correspondence group developing specifications for organizations which act on behalf of a flag administration. These guidelines establish minimum requirements for the delegated organization to meet with respect to personnel, capabilities, and training.

Members of the public may request any of the documents relating to FSI 3. Members of the public may attend this meeting up to the seating capacity of the room.

For further information on this FSI Working Group meeting, contact Commander J.M. Holmes at (202) 267–1044, U.S. Coast Guard Headquarters (G–MVI–1), 2100 Second Street, SW, Washington, DC 20593–0001.

Dated: December 20, 1994.

Marie Murray,

Executive Secretary, Shipping Coordinating Committee.

[FR Doc. 95–282 Filed 1–5–95; 8:45 am]

BILLING CODE 4710–07–M

DEPARTMENT OF TRANSPORTATION

Office of the Secretary

[Docket No. 49844]

RIN 2105–AC19

Statement of United States International Air Transportation Policy

AGENCY: Office of the Secretary, Department of Transportation.

ACTION: Request for comments on a report prepared for the Office of the Secretary titled ''A Study of International Airline Code Sharing''.

SUMMARY: The Department of Transportation has issued a study prepared by Gellman Research Associates on international airline code sharing. This topic is relevant to issues raised in the Department's international

transportation policy statement. Therefore, the Department has invited comments on the study to be included in the docket established for comment on the U.S. international aviation policy statement. Copies of the study can be obtained from James M. Craun, Office of Aviation and International Economics, Office of the Assistant Secretary for Aviation and International Affairs, U.S. Department of Transportation, 400 7th Street SW, Room 6401, Washington, DC 20590, (202) 366–1032.

DATES: Comments must be received no later than January 20, 1995.

ADDRESSES: Comments should be sent to the Docket Clerk, Docket 49844, Department of Transportation, 400 7th Street, S.W., Washington, DC 20590. To facilitate consideration of the comments, we ask commenters to file twelve copies of each comment. Comments will be available for inspection at this address from 9:00 a.m. to 5:00 p.m., Monday through Friday. Commenters who wish the Department to acknowledge the receipt of their comments should include a stamped, self-addressed postcard with their comments. The Docket Clerk will date-stamp the postcard and mail it back to the commenter.

FOR FURTHER INFORMATION CONTACT: James M. Craun, Office of Aviation and International Economics, Office of the Assistant Secretary for Aviation and International Affairs, U.S. Department of Transportation, 400 7th Street SW, Room 6401, Washington, DC 20590, (202) 366–1032.

Dated: December 29, 1994.

Robert S. Goldner,

Special Counsel for the Acting Assistant Secretary for Aviation and International Affairs.

[FR Doc. 95–299 Filed 1–5–95; 8:45 am]

BILLING CODE 4910–62–M

Aviation Proceedings; Agreements Filed During the Week Ended December 23, 1994

The following Agreements were filed with the Department of Transportation under the provisions of 49 U.S.C. 412 and 414. Answers may be filed within 21 days of date of filing.

Docket Number: 49979.
Date filed: December 20, 1994.
Parties: Members of the International Air Transport Association.
Subject: TC3 Reso/P 0601 dated Dec. 16, 1994 r-1 to r-25; TC3 Reso/P 0602 dated Dec. 16, 1994 r-26 to r-53; Expedited TC3 Passenger Resos.
Proposed Effective Date: January 31/ February 1, 1995.

Docket Number: 49984.
Date filed: December 23, 1994.
Parties: Members of the International Air Transport Association.
Subject: COMP Telex Mail vote 723; Amend Rounding Units for Poland; r-1—024d r-2—033d.
Proposed Effective Date: January 1, 1995.

Docket Number: 49985.
Date filed: December 23, 1994.
Parties: Members of the International Air Transport Association.
Subject: TC1 Telex Mail Vote 722; Within South America fares; r-1—041d r-3—061d r-5—071b; r-2—051d r-4—070j.
Proposed Effective Date: January 15, 1995.

Phyllis T. Kaylor,

Chief, Documentary Services Division.

[FR Doc. 95–301 Filed 1–5–95; 8:45 am]

BILLING CODE 4910–62–P

Notice of Applications for Certificates of Public Convenience and Necessity and Foreign Air Carrier Permits Filed Under Subpart Q During the Week Ended December 23, 1994

The following Applications for Certificates of Public Convenience and Necessity and Foreign Air Carrier Permits were filed under Subpart Q of the Department of Transportation's Procedural Regulations (See 14 CFR 302.1701 et. seq.). The due date for Answers, Conforming Applications, or Motions to Modify Scope are set forth below for each application. Following the Answer period DOT may process the application by expedited procedures. Such procedures may consist of the adoption of a show-cause order, a tentative order, or in appropriate cases a final order without further proceedings.

Docket Number: 49976.
Date filed: December 19, 1994.
Due Date for Answers, Conforming Applications, or Motion to Modify Scope: January 17, 1995.
Description: Application of Northwest Airlines, Inc., pursuant to 49 U.S.C. Section 41101, applies for Renewal of its Certificate of Public Convenience and Necessity for Route 579, which authorizes Northwest to engage in foreign air transportation of persons, property and mail between the coterminal points of Guam, Saipan, and Northern Mariana Islands, on the one hand, and the terminal points Nagoya, Japan and Fukuoka, Japan on the other hand.

Docket Number: 49977.
Date filed: December 19, 1994.
Due Date for Answers, Conforming Applications, or Motion to Modify Scope: January 17 , 1995.
Description: Application of MGM Grand Air, Inc., requests disclaimer of jurisdiction over an intra-corporate transaction pursuant to which the certificate of public convenience and necessity held by MGM Grand Air, and all of the other tangible assets of MGM Grand Air, would be shifted to a sister company, Grand Holdings, Inc.

Docket Number: 48658.
Date filed: December 21, 1994.
Due Date for Answers, Conforming Applications, or Motion to Modify Scope: January 18, 1995.
Description: Application of Southern Air Transport, Inc. pursuant to Section 401 of the Act and Subpart Q of the Regulations, so as to delete the language ''d/b/a Polar Air Cargo'' from the name of the carrier, thereby resulting in the name ''Southern Air Transport, Inc.''

Phyllis T. Kaylor,

Chief, Documentary Services Division.

[FR Doc. 95–300 Filed 1–5–95; 8:45 am]

BILLING CODE 4910–62–P

Federal Aviation Administration

Notice of Intent to Rule on Application to Impose and Use the Revenue from a Passenger Facility Charge (PFC) at Yakima Air Terminal, submitted by the Yakima Air Terminal Board, Yakima, WA

AGENCY: Federal Aviation Administration (FAA), DOT.

ACTION: Notice of intent to rule on application.

SUMMARY: The FAA proposes to rule and invites public comment on the application to impose and use the revenue from a PFC at Yakima Air Terminal under the provisions of the Aviation Safety and Capacity Expansion Act of 1990 (Title IX of the Omnibus Budget Reconciliation Act of 1990) (Pub. L. 101–508) and 14 CFR Part 158.

DATES: Comments must be received on or before February 6, 1995.

ADDRESSES: Comments on this application may be mailed or delivered in triplicate to the FAA at the following address: Mr. J. Wade Bryant, ADO Manager; Seattle Airports District Office, SEA–ADO; Federal Aviation Administration; 1601 Lind Avenue SW., Suite 250, Renton, WA 98055–4056.

In addition, one copy of any comments submitted to the FAA must be mailed or delivered to Mr. Bruce Loy, Airport Manager at the following

address: 2400 West Washington Avenue, Yakima, WA 98903.

Air carriers and foreign air carriers may submit copies of written comments previously provided to the Yakima Air Terminal under § 158.23 of Part 158.

FOR FURTHER INFORMATION CONTACT: Mr. Paul Johnson, Federal Aviation Administration, Seattle Airports District Office, 1601 Lind Avenue SW., Suite 250, Renton, WA 98055–4056, (206) 227–2655. The application may be reviewed in person at this same location.

SUPPLEMENTARY INFORMATION: The FAA proposes to rule and invites public comment on the application to impose and use the revenue from a PFC at the Yakima Air Terminal under the provisions of the Aviation Safety and Capacity Act of 1990 (Title IX of the Omnibus Budget Reconciliation Act of 1990) (Pub. L. 101–508) and Part 158 of the Federal Aviation Regulations (14 CFR Part 158).

On December 22, 1995, the FAA determined that the application to impose and use the revenue from a PFC submitted by the Yakima Air Terminal Board was substantially complete within the requirements of section 158.25 of Part 158. The FAA will approve or disapprove the application, in whole or in part, no later than April 19, 1995.

The following is a brief overview of the application.

Level of the proposed PFC: $3.00

Proposed charge effective date: June 1, 1995

Proposed charge expiration date: July 31, 1996

Total estimated PFC revenue: $220,000.00

Brief description of proposed project(s): Runway 9–27 Rehabilitation project.

Class or classes of air carriers which the public agency has requested not be required to collect PFCs: Air taxi/commercial operators filing FAA Form 1800–31.

Any person may inspect the application in person at the FAA office listed above under **FOR FURTHER INFORMATION CONTACT** and at the FAA regional Airports office located at: Federal Aviation Administration, Northwest Mountain Region, Airports Division, ANM–600, 1601 Lind Avenue, SW., Suite 540, Renton, WA 98055–4056.

In addition, any person may, upon request, inspect the application, notice and other documents germane to the application in person at Yakima Air Terminal.

Issued in Renton, Washington on December 30, 1994.

David A. Field,

Manager, Planning, Programming and Capacity Branch, Airports Division, Northwest Mountain Region.

[FR Doc. 95–368 Filed 1–5–95; 8:45 am]

BILLING CODE 4910–13–M

DEPARTMENT OF THE TREASURY

Fiscal Service

[Dept. Circ. 570, 1994 Rev., Supp. No. 6]

Surety Companies Acceptable on Federal Bonds; Chatham Reinsurance Corporation

A Certificate of Authority as an acceptable surety on Federal Bonds is hereby issued to the following company under Sections 9304 to 9308, Title 31, of the United States Code. Federal bond-approving officers should annotate their reference copies of the Treasury Circular 570, 1994 Revision, on page 34148 to reflect this addition:

Chatham Reinsurance Corporation. BUSINESS ADDRESS: 26 Main Street, Chatham, New Jersey 07928. PHONE: (201) 635–4000. UNDERWRITING LIMITATION [b]: $2,806,000. SURETY LICENSES [c]: CO, DC, ID, IA, MD, MA, NE, NJ, NY, OK, UT. INCORPORATED IN: California.

Certificates of Authority expire on June 30 each year, unless revoked prior to that date. The Certificates are subject to subsequent annual renewal as long as the companies remain qualified (31 CFR Part 223). A list of qualified companies is published annually as of July 1 in Treasury Department Circular 570, with details as to underwriting limitations, areas in which licensed to transact surety business and other information.

Copies of the Circular may be obtained from the Surety Bond Branch, Funds Management Division, Financial Management Service, Department of the Treasury, Hyattsville, MD 20782, phone (202) 874–6850.

Dated: December 28, 1994.

Charles F. Schwan III,

Director, Funds Management Division, Financial Management Service.

[FR Doc. 95–303 Filed 1–5–95; 8:45 am]

BILLING CODE 4810–35–M

Office of Thrift Supervision

Cornerstone Bank, F.S.B., Mission Viejo, CA; Notice of Appointment of Receiver

Notice is hereby given that, pursuant to the authority contained in § 5(d)(2) of the Home Owners' Loan Act, the Office of Thrift Supervision has duly appointed the Resolution Trust Corporation as sole Receiver for Cornerstone Bank, F.S.B., Mission Viejo, California, on December 16, 1994.

Dated: December 30, 1994.

By the Office of Thrift Supervision.

Kimberly M. White,

Corporate Technician.

[FR Doc. 94–276 Filed 1–5–95; 8:45 am]

BILLING CODE 6720–01–M

(AC–77; OTS No. 05462)

Marshall Savings Bank, F.S.B., Marshall, MI; Approval of Conversion Application

Notice is hereby given that on November 7, 1994, the Deputy Assistant Director, Corporate Activities Division, Office of Thrift Supervision, or her designee, acting pursuant to delegated authority, approved the application of Marshall Savings Bank, F.S.B., Marshall, Michigan, to convert to the stock form of organization. Copies of the application are available for inspection at the Information Services Division, Office of Thrift Supervision, 1700 G Street, N.W., Washington, D.C. 20552, and the Central Regional Office, Office of Thrift Supervision, 111 Wacker Drive, Suite 800, Chicago, Illinois 60601–4360.

Dated: December 30, 1994.

By the Office of Thrift Supervision.

Kimberly M. White,

Corporate Technician.

[FR Doc. 95–278 Filled 1–5–95; 8:45 am]

BILLING CODE 6720–01–M

[AC–76; OTS No. 05167]

SJS Federal Savings Bank, St. Joseph, MI; Approval of Conversion Application

Notice is hereby given that on November 10, 1994, the Deputy Assistant Director, Corporate Activities Division, Office of Thrift Supervision, or her designee, acting pursuant to delegated authority, approved the application of SJS Federal Savings Bank, St. Joseph, Michigan, to convert to the stock form of organization. Copies of the application are available for inspection at the Information Services Division, Office of Thrift Supervision, 1700 G Street, N.W., Washington, D.C. 20552, and the Central Regional Office, Office of Thrift Supervision, 111 Wacker Drive, Suite 800, Chicago, Illinois 60601–4360.

Dated: December 30, 1994.

By the Office of Thrift Supervision.

Kimberly M. White,

Corporate Technician.

[FR Doc. 95–279 Filed 1–5–95; 8:45 am]

BILLING CODE 6720–01–M

Standard Federal Savings, FSA Gaithersburg, MD: Notice of Appointment of Receiver

Notice is hereby given that, pursuant to the authority contained in § 5(d)(2) of the Home Owners' Loan Act, the Office of Thrift Supervision has duly appointed the Resolution Trust Corporation as sole Receiver for Standard, Federal Savings, FSA, Gaithersburg, Maryland, on November 18, 1994.

Dated: December 30, 1994.

By the Office of Thrift Supervision.

Kimberly M. White,

Corporate Technician.

[FR Doc. 94–277 Filed 1–5–94; 8:45 am]

BILLING CODE 6720–01–M

Sunshine Act Meetings

Federal Register
Vol. 60, No. 4
Friday, January 6, 1995

This section of the FEDERAL REGISTER contains notices of meetings published under the "Government in the Sunshine Act" (Pub. L. 94-409) 5 U.S.C. 552b(e)(3).

COMMODITY FUTURES TRADING

TIME AND DATE: 11:00 a.m., Friday, January 6, 1995.

PLACE: 2033 K St., N.W., Washington, D.C., 8th Floor Hearing Room.

STATUS: Closed.

MATTERS TO BE CONSIDERED: Surveillance Matters.

CONTACT PERSON FOR MORE INFORMATION: Jean A. Webb, 202–254–6314.

Jean A. Webb,
Secretary of the Commission.

[FR Doc. 95–440 Filed 1–4–95; 2:43 pm]

BILLING CODE 6351–01–M

COMMODITY FUTURES TRADING COMMISSION

TIME AND DATE: 10:00 a.m., Tuesday, January 10, 1995.

PLACE: 2033 K St., N.W., Washington, D.C., 8th Floor Hearing Room.

STATUS: Closed.

MATTERS TO BE CONSIDERED: Enforcement Matters.

CONTACT PERSON FOR MORE INFORMATION: Jean A. Webb, 202–254–6314.

Jean A. Webb,
Secretary of the Commission.

[FR Doc. 95–441 Filed 1–4–95; 2:43 pm]

BILLING CODE 6351–01–M

COMMODITY FUTURES TRADING COMMISSION

TIME AND DATE: 11 a.m., Friday, January 13, 1995.

PLACE: 2033 K St., NW, Washington, DC, 8th Floor Hearing Room.

STATUS: Closed.

MATTERS TO BE CONSIDERED: Surveillance Matters.

CONTACT PERSON FOR MORE INFORMATION: Jean A. Webb, 202–254–6314.

Jean A. Webb,
Secretary of the Commission.

[FR Doc. 94–442 Filed 1–4–95; 2:43 pm]

BILLING CODE 6351–01–M

COMMODITY FUTURES TRADING COMMISSION

TIME AND DATE: 11:00 a.m., Friday, January 20, 1995.

PLACE: 2033 K St., NW., Washington, DC, 8th Floor Hearing Room.

STATUS: Closed.

MATTERS TO BE CONSIDERED: Surveillance Matters.

CONTACT PERSON FOR MORE INFORMATION: Jean A. Webb, 202–254–6314.

Jean A. Webb,
Secretary of the Commission.

[FR Doc. 95–443 Filed 1–4–95; 2:43 pm]

BILLING CODE 6351–01–M

COMMODITY FUTURES TRADING COMMISSION

TIME AND DATE: 10:00 a.m., Tuesday, January 24, 1995.

PLACE: 2033 K St., NW., Washington, DC, 8th Floor Hearing Room.

STATUS: Closed.

MATTERS TO BE CONSIDERED: Enforcement Matters.

CONTACT PERSON FOR MORE INFORMATION: Jean A. Webb, 202–254–6314.

Jean A. Webb,
Secretary of the Commission.

[FR Doc. 95–444 Filed 1–4–95; 2:43 pm]

BILLING CODE 6351–01–M

COMMODITY FUTURES TRADING COMMISSION

TIME AND DATE: 11:00 a.m., Friday, January 27, 1995.

PLACE: 2033 K St., NW., Washington, DC, 8th Floor Hearing Room.

STATUS: Closed.

MATTERS TO BE CONSIDERED: Surveillance Matters.

CONTACT PERSON FOR MORE INFORMATION: Jean A. Webb, 202–254–6314.

Jean A. Webb,
Secretary of the Commission.

[FR Doc. 95–445 Filed 1–4–95; 2:43 pm]

BILLING CODE 6351–01–M

BOARD OF GOVERNORS OF THE FEDERAL RESERVE SYSTEM

TIME AND DATE: 10:00 a.m., Wednesday, January 11, 1995.

PLACE: Marriner S. Eccles Federal Reserve Board Building, C Street entrance between 20th and 21st Streets, NW., Washington, DC 20551.

STATUS: Closed.

MATTERS TO BE CONSIDERED:

1. Personnel actions (appointments, promotions, assignments, reassignments, and salary actions) involving individual Federal Reserve System employees.
2. Any items carried forward from a previously announced meeting.

CONTACT PERSON FOR MORE INFORMATION: Mr. Joseph R. Coyne, Assistant to the Board; (202) 452–3204. You may call (202) 452–3207, beginning at approximately 5 p.m. two business days before this meeting, for a recorded announcement of bank and bank holding company applications scheduled for the meeting.

Dated: January 4, 1995

Jennifer J. Johnson,
Deputy Secretary of the Board.

[FR Doc. 95–406 Filed 1–4–95; 11:11 am]

BILLING CODE 6210–01–P

SECURITIES AND EXCHANGE COMMISSION

Agency Meeting

FEDERAL REGISTER CITATION OF PREVIOUS ANNOUNCEMENT: [To be published]

STATUS: Closed meeting.

PLACE: 450 Fifth Street, N.W., Washington, D.C.

DATE PREVIOUSLY ANNOUNCED: To be published.

CHANGE IN THE MEETING: Additional item.

The following additional item will be considered at a closed meeting scheduled for Thursday, January 5, 1995, at 2:30 p.m.

Settlement of injunctive action.

Commissioner Roberts, as duty officer, determined that Commission business required the above change and that no earlier notice thereof was possible.

At times, changes in Commission priorities require alterations in the scheduling of meeting items. For further information and to ascertain what, if any, matters have been added, deleted or postponed, please contact: The Office of the Secretary, (202) 942–7070.

Dated: January 4, 1995.

Jonathan G. Katz,
Secretary.

[FR Doc. 95–425 Filed 1–4–95; 2:41 pm]

BILLING CODE 8010–01–M

UNITED STATES ENRICHMENT CORPORATION BOARD OF DIRECTORS

TIME AND DATE: 8:00 a.m., Tuesday, January 10, 1995.

PLACE: USEC Corporate Headquarters, 6903 Rockledge Drive, Bethesda, Maryland 20817.

STATUS: The meeting will be closed to the public.

MATTERS TO BE CONSIDERED:

- Review of commercial and financial issues of the Corporation
- Review of personnel rules and practices
- Procedural matters

CONTACT PERSON FOR MORE INFORMATION:

Barbara Arnold, 301–564–3354.

Dated: January 4, 1995.

William H. Timbers, Jr.,

President and Chief Executive Officer.

[FR Doc. 95–436 Filed 1–4–95; 2:42 pm]

BILLING CODE 8720–01–M

Corrections

Federal Register

Vol. 60, No. 4

Friday, January 6, 1995

This section of the FEDERAL REGISTER contains editorial corrections of previously published Presidential, Rule, Proposed Rule, and Notice documents. These corrections are prepared by the Office of the Federal Register. Agency prepared corrections are issued as signed documents and appear in the appropriate document categories elsewhere in the issue.

DEPARTMENT OF HEALTH AND HUMAN SERVICES

Food and Drug Administration

[Docket No. 94D-0300]

International Harmonization; Draft Policy on Standards; Availability

Correction

In notice document 94–29116 beginning on page 60870 in the issue of Monday, November 28, 1994, make the following correction:

On page 60872, in the third column, in the first full paragraph, in the 14th line from the bottom, ''(PhMA)'' should read ''(PhRMA)''.

BILLING CODE 1505–01–D

DEPARTMENT OF THE INTERIOR

Fish and Wildlife Service

50 CFR Part 20

RIN 1018-AC66

Migratory Bird Hunting; Decision on the Conditional Approval of Bismuth-Tin Shot as Nontoxic for the 1994-95 Season

Correction

In rule document 94–32214 beginning on page 61 in the issue of Tuesday, January 3, 1995, make the following correction:

On page 61, in the first column, in the **EFFECTIVE DATE** section, ''January 3, 1995'' should read ''December 30, 1994''.

BILLING CODE 1505–01–D

federal register

Friday
January 6, 1995

Part II

Department of Labor

Wage and Hour Division

29 CFR Part 825

The Family and Medical Leave Act of 1993; Final Rule

DEPARTMENT OF LABOR

Wage and Hour Division

29 CFR Part 825

RIN 1215–AA85

The Family and Medical Leave Act of 1993

AGENCY: Wage and Hour Division, Labor.

ACTION: Final rule.

SUMMARY: This document provides the text of final regulations implementing the Family and Medical Leave Act of 1993, Public Law 103–3, 107 Stat. 6 (29 U.S.C. 2601 *et seq.*) (FMLA or Act). FMLA generally requires private sector employers of 50 or more employees, and public agencies, to provide up to 12 workweeks of unpaid, job-protected leave to eligible employees for certain specified family and medical reasons; to maintain eligible employees' pre-existing group health insurance coverage during periods of FMLA leave; and to restore eligible employees to their same or an equivalent position at the conclusion of their FMLA leave.

EFFECTIVE DATE: These rules are effective on February 6, 1995.

FOR FURTHER INFORMATION CONTACT: J. Dean Speer, Director, Division of Policy and Analysis, Wage and Hour Division, Employment Standards Administration, U.S. Department of Labor, Room S–3506, 200 Constitution Avenue, NW., Washington, DC 20210; telephone (202) 219–8412. This is not a toll-free number.

SUPPLEMENTARY INFORMATION:

I. Paperwork Reduction Act

Recordkeeping requirements contained in these regulations (§ 825.500) have been reviewed and approved for use through July 1996 by the Office of Management and Budget (OMB) and assigned OMB control number 1215–0181 under the Paperwork Reduction Act of 1980 (Pub. L. 96–511). No substantive changes have been made in this final rule which affect the recordkeeping requirements and estimated burdens previously reviewed and approved under OMB control number 1215–0181. Comments received regarding the estimate of public reporting burden for the information collection requirements contained in these regulations are discussed below in connection with § 825.500.

II. Background

The FMLA was enacted on February 5, 1993. In general, FMLA entitles an ''eligible employee'' to take up to a total of 12 workweeks of unpaid leave during any 12-month period for the birth of a child and to care for such child, for the placement of a child for adoption or foster care, to care for a spouse or an immediate family member with a serious health condition, or when he or she is unable to work because of a serious health condition. Employers covered by the law are required to maintain any pre-existing group health coverage during the leave period and, once the leave period is concluded, to reinstate the employee to the same or an equivalent job with equivalent employment benefits, pay, and other terms and conditions of employment.

Title I of the Act applies to private sector employers of 50 or more employees, public agencies, and certain Federal employers and entities, such as the U.S. Postal Service and Postal Rate Commission. These regulations, 29 CFR Part 825, implement Title I of the FMLA. Similar leave entitlement provisions in Title II of the FMLA apply to most other Federal civil service employees who are covered by the annual and sick leave system established under 5 U.S.C. Chapter 63, plus certain employees covered by other Federal leave systems. The U.S. Office of Personnel Management (OPM) administers the regulations implementing Title II of the FMLA (*see* 5 CFR Part 630). Title III established a temporary ''Commission on Leave,'' which is to conduct a comprehensive study and produce a report on existing and proposed policies on leave and the costs, benefits, and impact on productivity of such policies. Title IV contains miscellaneous provisions, including rules governing the effect of the Act on more generous leave policies, other laws, and existing employment benefits. Title V extended similar leave provisions to certain employees of the U.S. Senate and the U.S. House of Representatives.

Section 404 of the Act required the Department of Labor to issue regulations to implement Title I and Title IV of FMLA within 120 days of enactment, or by June 5, 1993, with an effective date of August 5, 1993. Title I of FMLA became effective on August 5, 1993, except where a collective bargaining agreement (CBA) was in effect on that date, in which case the provisions took effect on the date the CBA terminated or on February 5, 1994, whichever date occurred earlier.

To obtain public input and assist in the development of FMLA's implementing regulations, the Department published a notice of proposed rulemaking in the **Federal Register** on March 10, 1993 (58 FR 13394), inviting comments until March 31, 1993, on a variety of questions and issues. A total of 393 comments were received in response to the notice—from employers, trade and professional associations, advocacy organizations, labor unions, State and local governments, law firms and employee benefit firms, academic institutions, financial institutions, medical institutions, governments, Members of Congress, and others.

After consideration of the comments received, the Department issued an interim final rule on June 4, 1993 (58 FR 31794), which went into effect on August 5, 1993, and which invited further public comment on FMLA's implementing rules until September 3, 1993. On August 30, 1993, the Department further extended the public comment period until December 3, 1993 (58 FR 45433). The Department received more than 900 comments on the interim final rules during the extended comment period from advocacy groups and associations, Members of Congress, employers, union organizations, governmental entities and associations, law firms, management consultants, marriage and family counselors and therapists, clinical social workers, property management companies, temporary help and employee leasing companies, professional and trade associations, universities, and individuals. In addition to the substantive comments discussed below, many commenters submitted minor editorial suggestions, some of which were adopted and some were not. Finally, a number of other minor editorial changes have been made to better organize and simplify the regulatory text.

On December 29, 1994, a meeting was held at OMB with representatives of Consolidated Edison Company of New York pursuant to E.O. 12866.

The Department would like to point out that it has prepared a lengthy preamble to accompany these regulations in an attempt to be fully responsive to the numerous comments received. The Department would welcome additional comments regarding employers' experience with the implementation of the FMLA over the course of the next year or so. Such comments will be reviewed together with the results of the comprehensive study on existing and proposed leave policies to be conducted by the Commission on Leave to determine whether further revisions to these regulations will be appropriate in the future.

Summary of Major Comments

I. Subpart A, §§ 825.100–825.118

Covered Employers (§ 825.104)

Under FMLA, any employer engaged in commerce or in an industry or activity affecting commerce is covered if 50 or more employees are employed in at least 20 or more calendar workweeks in the current or preceding calendar year. The Women's Legal Defense Fund and the Food & Allied Service Trades expressed concern that employers may manipulate workforce levels to avoid the Act's leave requirements. In this connection, they suggested that any intentional reduction to 49 or fewer employees after an employee request for FMLA leave should constitute unlawful interference with FMLA rights, and, as provided in regulations by the State of Oregon under its Family Leave Act, deemed a violation of the Act.

Section 825.220 discusses the prohibited acts and anti-discrimination provisions of the Act, including violative employer practices that attempt to interfere with an employee's exercise of rights under the Act. It is the Department's view that manipulation of workforce levels by employers covered by FMLA in an effort to deny employees' eligibility for leave is a violation of the Act's requirements, and this has been clarified in § 825.220.

Two commenters (Alabama Power Company and DLH Industries, Inc.) objected to the statement in § 825.104 that individuals such as corporate officers ''acting in the interest of an employer'' are individually liable for any violations of the Act. They contend that this provision could frustrate advancement to managerial positions and unnecessarily increase costs for insurance and bonding. The California Department of Fair Employment and Housing questioned whether managers or supervisors can be held personally liable under FMLA.

FMLA's definition of ''employer'' is the same as the Fair Labor Standards Act (FLSA), 29 U.S.C. 203(d), insofar as it includes any person who acts directly or indirectly in the interest of an employer to any of the employer's employees. Under established FLSA case law, corporate officers, managers and supervisors acting in the interest of an employer can be held individually liable for violations of the law. *See, e.g., Reich* v. *Circle C Investments, Inc., 998 F.2d 324 (5th Cir. 1993); Dole* v. *Elliot Travel & Tours, Inc.,* 942 F.2d 962 (6th Cir. 1991).

The Chamber of Commerce of the USA expressed concern about the impact of the ''employer'' definition on various business arrangements, *e.g.,* leased employees, franchises, and other loosely-related business operations. The National Automobile Dealers Association stated that additional guidance on the application of the ''integrated employer'' test would benefit the small business community in particular.

The ''integrated employer'' test is not a new concept created solely for purposes of FMLA. It is based on established case law, as was explained in the preamble of the Interim Final Rule, arising under Title VII of the Civil Rights Act of 1964 and the Labor Management Relations Act. As FMLA's legislative history states, the definition of ''employer'' parallels Title VII's language defining a covered employer and is intended to receive the same interpretation. Under Title VII and other employment-related legislation, including the LMRA, when determining whether to treat separate entities as a single employer, individual determinations are highly fact-specific and are based on whether there is common management, an interrelation between operations, centralized control of labor relations, and the degree of common ownership/financial control. They are not determined by any single criterion, nor do all factors need to be present; rather, the entire relationship is viewed as a whole. Because it is a fact-specific question in each case, further detailed guidance cannot be provided in the regulations.

The Society for Human Resource Management questioned whether the Act applied to employers in Puerto Rico, or to such entities as the Resolution Trust Corporation or to Indian Tribes. FMLA's coverage extends to any State of the United States, the District of Columbia, and to any territory or possession of the United States (§ 101(3) of FMLA defines the term ''State'' to have the same meaning as defined in § 3(c) of the Fair Labor Standards Act). Employees of U.S. firms stationed at worksites outside the United States, its territories, or possessions are not protected by FMLA, nor are such employees counted for purposes of determining employer coverage or employee ''eligibility'' with respect to worksites inside the United States. This point has been clarified in § 825.105 of the regulations. The Resolution Trust Corporation can be a covered employer under Title I of FMLA as a ''successor in interest'' of a covered employer when it assumes control over a failing thrift as part of the resolution process. Because FMLA is a statute of broad general applicability, which applies to both the public and private sectors, and there is nothing in either the statute or its legislative history which provides an exemption for Indian tribes, it is the Department's view that Indian tribes may be covered by the legislation where the statutory prerequisites are met, as ''a general statute in terms applying to all persons includes Indians and their property interests.'' *FPC* v. *Tuscarora Indian Nation,* 362 U.S. 99, 116 (1960). The rule in *Tuscarora* contains exceptions for laws that (1) affect exclusive rights of self-governance in purely intramural matters; (2) abrogate rights guaranteed in Indian treaties; or (3) provide proof by legislative history or otherwise that Congress intended the law not to apply to Indians. It is the Department's position that these exceptions do not apply to the FMLA, consistent with the reasoning of the Ninth Circuit in *Donovan* v. *Coeur d'Alene Tribal Farm,* 751 F.2d 1113, 1116 (1985). But see *EEOC* v. *Cherokee Nation,* 871 F.2d 937 (1989), in which the Tenth Circuit held that the Age Discrimination in Employment Act does not apply to Indians because its enforcement would interfere with the tribe's right of self-government.

50 Employee/20 Workweek Threshold (§ 825.105)

Private sector employers must employ 50 or more employees each working day during 20 or more calendar weeks in the current or preceding calendar year to be covered by FMLA. Nine commenters addressed the ''50 or more employees'' threshold test for coverage. The Women's Legal Defense Fund and the International Ladies' Garment Worker's Union objected to the exclusion of workers on temporary layoff from the count. They argued that temporary workers with a reasonable expectation of return to active employment are counted as employees under the Worker Adjustment and Retraining Notification (WARN) Act; that the test for evaluating who is an employee should be that of a ''continuing employment relationship'' and not the actual performance of work during a given time period; and that only employees on an indefinite or long-term layoff should be excluded from the count.

FMLA has significantly different statutory coverage provisions and serves considerably different objectives than those of WARN. The FMLA regulations attempt to define the size of an employer's workforce count for leave purposes, and uses a ''continuing employment relationship'' principle. There is no continuing employee-employer relationship during a layoff, as evidenced by the fact that employees on

layoff are entitled to unemployment benefits, and laid-off employees are not maintained on the payroll during such periods. Furthermore, being on unpaid leave is not the same as being laid off. Moreover, under FMLA, if, while on FMLA leave, an employee would have been laid off, and the employment relationship terminated, the employee's rights to continued leave and job reinstatement would not extend beyond the date the employee would have been laid off. While the regulations do not require actual performance of work during a given time period for an employee to be counted as having a continuing employment relationship (*e.g.*, employees on employer-approved leaves of absence are still included where there is a reasonable expectation of return to work), based on FMLA's legislative history, the regulations necessarily exclude all employees who are on layoff, and the employment relationship terminated, whether the layoff is temporary, indefinite or long-term.

Southern Electric International, Inc. felt that the treatment of part-time workers on the same basis as full-time workers unnecessarily broadened coverage because employer obligations under the Act, particularly employers with large numbers of part-time workers, were based on counting non-eligible employees. Southern Electric argued that part-time workers should be counted, if at all, only on a pro-rata basis, *i.e.*, two part-time workers working 20 hours a week would equal one equivalent full-time employee. The United Paperworkers International Union, on the other hand, supported counting part-time workers as consistent with the language of the Act and with Title VII of the Civil Rights Act of 1964. The union also felt that employers should be required to notify employees and their union representatives when the conditions for coverage are no longer met.

FMLA's legislative history clearly states Congressional intent to include part-time employees when counting the size of the employer's workforce. The committee reports state that part-time employees and employees on leaves of absence would be counted as ''employed for each working day'' so long as they are on the payroll for each day of the workweek. And, similarly, in aggregating the number of employees at the worksite and within 75 miles for determining employee eligibility, the legislative history states that all of the employees of the employer, not just eligible employees, are to be counted. Accordingly, part-time employees must be counted the same as full-time employees under FMLA.

With respect to adding a requirement that employers notify employees and their representatives when they cease to be covered by the Act, the Department believes that such a requirement would be overly burdensome. Questions of employer coverage and employee eligibility are fact-specific and may be subject to frequent change in some employment situations. They should be resolved as necessary when an employee requests leave.

Southern Electric International, Inc. also noted that the phrase ''reasonable expectation that the employee will later return to work'' is confusing as it relates to employees on long-term disability because such employees rarely ever return to work for the same employer. The commenter recommended that long-term disabled employees be excluded from the 50-employee count. The National Restaurant Association also maintained that the ''reasonable expectation'' requirement should be deleted because it had no basis in the Act or its legislative history, arguing further that the term was surplusage in that an employee is either on the payroll or is not on the payroll.

An employee who is *permanently* disabled from work would not reasonably be expected to return to work and, therefore, may be excluded from the employee count. The Department continues to believe, however, that the employer's workforce count should be based on whether there is a continuing employment relationship between the employer and each of its employees. A ''reasonable expectation'' that an employee on leave will later return to work is an appropriate standard that contributes to a better understanding of that relationship for purposes of FMLA, and it is retained in the regulations.

Additionally, two public commenters (Association of Washington Cities and the California Department of Fair Employment and Housing) suggested that the phrase ''on the payroll'' needed clarification as applied to public employers. They noted practices of local governments to hire seasonal and temporary employees, particularly in public works and recreation, who may or may not be rehired the following summer or after completion of short term projects; or to use volunteer firefighters and volunteer police reserve officers who receive only nominal stipends for service. Because public agencies are covered ''employers'' under the Act regardless of the number of employees employed (see § 825.108(a)), these comments more appropriately raise questions related to ''employee eligibility'' and are addressed in the discussion of §§ 825.110 and 825.111.

Joint Employment (§ 825.106)

Administaff, Abel Temps, National Staff Leasing Association, National Association of Temporary Services, and National Staff Network argued that temporary help and leasing agencies should not be held responsible, as the primary employer, for giving the required FMLA notices, providing leave, maintaining health benefits, and job restoration. In particular, they stressed the unique nature of their business and the relationship with client employers, who, rather than the temporary help or leasing agency, have control over worksites and jobs. They argue generally that client employers, as secondary employers, should be responsible for job restoration and other requirements of the Act for all their own employees, including leased or temporary employees. In the alternative, several of these commenters urged adoption of a ''head of the line'' standard, which would limit job restoration for temporary or leased employees where the client employer discontinues the services of the temporary or leasing agency or the services of the returning temporary/leased employee, to priority consideration by the temporary or leasing agency for possible placement in assignments with other client employers for which the employee is qualified. Several of these commenters also proposed differing criteria for situations where temporary or leasing agencies contract with covered and non-covered client employers.

The Department agrees that joint employment relationships do present special compliance concerns for temporary help and leasing agencies in that the ease with which they may be able to meet their statutory obligations under FMLA may depend largely on the nature of the relationship they have established with their client-employers. Our analysis of the statute and its legislative history in the context of the industry comments submitted, however, revealed no viable alternatives that could be implemented by regulation that would not also have the unacceptable result of depriving eligible employees of their statutory rights to job reinstatement at the conclusion of FMLA leave. As the legislative history clearly states, the right to be restored upon return from leave to the previous position or to an equivalent position with equivalent employment benefits, pay and other terms and conditions of employment is *central* to the entitlement provided by FMLA.

Furthermore, it is the employment agency which is responsible for the employee's pay and benefits, and is in the best position to provide the rights and benefits of the Act.

FMLA does not entitle a restored employee to any right, benefit, or position of employment other than any right, benefit, or position which the employee would have held or been entitled to had the employee not taken leave. This means, for example, that if, but for being on leave, an employee would have been laid off, the employee's right to reinstatement is whatever it would have been had the employee not been on leave when the layoff occurred. Thus, if a client employer of a temporary help agency discontinued the services of the temporary help agency altogether, or discontinued contracting for the particular services that were being furnished by the temporary employee who took FMLA leave, during the employee's FMLA leave period, following a ''head of the line'' approach for giving the returning employee priority consideration for possible placement in assignments with other client employers for which the employee is qualified would appear to be entirely consistent with the intent of the FMLA in those circumstances. As provided in § 825.216, an employer must show that an employee would not otherwise have been employed in order to deny restoration to employment in the same or an equivalent position. Failure to promptly restore a returning employee to employment at the conclusion of the leave where the client employer continues to utilize the same services as were previously furnished by the employee who took leave would be a violation of FMLA's job restoration requirements.

Two commenters (William M. Mercer, Inc. and Chamber of Commerce of the USA) noted that subsection (f) could be construed as requiring the secondary or client employer to restore the jobs of temporary or leased employees, which is disruptive to business and the contractual relationship between temporary or leasing agencies and the client employers. They felt that job restoration obligations should be the responsibility of the temporary or leasing agency (the primary employer).

The primary employer (temporary placement firm or leasing agency) is responsible for furnishing eligible employees with all FMLA-required notices, providing FMLA leave, maintaining health benefits during FMLA leave, and restoring employees to employment upon return from leave. In addition, although job restoration is the responsibility of the primary employer, the purposes of the Act would be thwarted if the secondary employer is able to prevent an employee from returning to employment. Accordingly, the regulations are revised to provide that the secondary employer is responsible for accepting an employee returning from leave in place of any replacement employee. Furthermore, the secondary employer (client employer) must observe FMLA's prohibitions in § 105(a)(1), including the prohibition against interfering with, restraining, or denying the exercise of or attempt to exercise any rights provided under the FMLA. It would be an unlawful practice, in the Department's view, if a secondary employer interfered with or attempted to restrain efforts by the primary (temporary help) employer to restore an employee who was returning from FMLA leave to his or her previous position of employment with the secondary (client) employer (where the primary (temporary help) employer is still furnishing the same services to the secondary (client) employer). Because the secondary employer is acting in the interest of the primary employer within the meaning of § 101(4)(A)(ii)(I) of the Act, the secondary employer has these responsibilities, regardless of the number of employees employed.

The National Association of Plumbing-Heating-Cooling Contractors noted a potential for misunderstandings of the ''joint employment'' criteria and the Chamber of Commerce of the USA, for similar reasons, urged that DOL reconsider the requirement in subsection (d) that jointly-employed employees are counted by both employers in determining employer coverage and employee eligibility. This requirement, according to the Chamber, was of particular concern to small businesses. To minimize the risk of unintentional violations of the Act, the Chamber recommended against a requirement to count employees jointly for purposes of determining eligibility status, and urged adoption of ''good faith'' defense provisions for employers confronted with joint employment quandaries.

In joint employment relationships, an individual employee's eligibility to take FMLA leave is determined from counting the employees employed by *that* employee's *primary* employer (*i.e.*, the one responsible for granting FMLA leave), and would exclude any ''permanent'' employees ''primarily employed'' by any secondary (joint) employer of that same employee. Thus, in practical effect, the employee is only counted once for purposes of determining his or her own individual eligibility to take FMLA leave. In the example of 15 employees from a temporary help agency working with 40 ''permanent'' employees employed by an employer, the eligibility of any one of the 15 temporary help agency employees to take FMLA leave from their *primary* employer (the temporary help agency) is determined by counting only the temporary help agency employees assigned (outplaced) from or working at the temporary help agency's ''single site of employment'' (*i.e.*, most likely the main placement or corporate office). Excluded from this count is any ''permanent'' employee of any of the temporary help agency's client employers. On the other hand, the client employer with 40 ''permanent'' employees is responsible for granting FMLA leave to its ''permanent'' employees because it employs a total of more than 50 employees when including the jointly-employed employees, but its obligation to grant FMLA leave extends to only its 40 ''permanent'' employees. Notwithstanding the complexities that arise in administering the law in joint employment contexts, there is no authority to adopt by regulation any ''good faith'' defense provisions that would take away employees' statutory rights.

William M. Mercer, Inc. noted that the requirement in subsection (d) relating to counting jointly-employed employees for coverage and eligibility purposes ''whether or not maintained on a payroll'' differed from § 825.111(c), which limits the employee count at a worksite to employees maintained on the payroll. The commenter urged clarification of ''joint employment'' principles in the case of worksite determinations and, also, in determinations of whether or not 1,250 hours have been worked for eligibility (§ 825.110(d)).

As noted above, § 825.106 provides particularized guidance that addresses the special circumstances of joint employment. Because in most joint employment situations there may be only one payroll, maintained by only the primary employer, the guidance in §§ 825.105 and 825.111, standing alone, would not be sufficient to address joint employment. Section 825.106 is revised to further clarify application, as the employee is maintained on only one payroll. In addition, in order to clarify and prevent misunderstandings, § 825.111 is revised to add similar guidance from § 825.106 on joint employment ''worksite'' determinations for purposes of determining employee eligibility. With respect to counting the

hours worked by jointly-employed employees to determine if the 1,250 hour threshold is met, the calculation is relevant only with respect to the *primary* employer of the employee at the time the employee requests FMLA leave.

The discussion of employment relationship in general has been removed from this section of the regulations and a more general discussion has been included instead in § 825.105.

Successor in Interest (§ 825.107)

The Equal Employment Opportunity Commission (EEOC) pointed out that while the factors for determining ''successor in interest'' are based in part on Title VII precedent, no reference is made in this section to whether or not the successor had ''notice'' of pending complaints against a predecessor employer. The EEOC recommended clarifying how ''notice'' affects the liability of a successor employer or a statement explaining that the FMLA rule departs from established Title VII precedent in this respect.

As explained in the preamble to the Interim Final Rule, the list of factors is derived from Title VII and Vietnam Era Veterans' Readjustment Act of 1974 case law. The Department agrees with the court in *Horton* v. *Georgia-Pacific Corp.*, 114 Lab. Cas. (CCH) par. 12,060 (E.D. Mich. 1990), that notice should not be considered to continue the predecessor's obligation to employees who are on leave, or for determining coverage and eligibility of employees continuing in employment. The Department believes, however, that notice may be relevant in determining a successor employer's liability for violations of the predecessor, and the rule is clarified accordingly.

The Chamber of Commerce of the USA indicated a need to clarify how a predecessor and successor employer can allocate FMLA liability and responsibility. In this connection, the commenter recommended adoption of criteria provided by 20 CFR § 639.4 of the Worker Adjustment and Retraining Notification Act regulations.

The WARN Act regulations, at § 639.4(c), discuss the effect of a sale of a business between a seller and a buyer and the continuing employer obligations, under WARN, for giving notice to employees of plans to carry out a plant closing or mass layoff. While the Department believes it is appropriate for a seller of a business to inform a potential buyer of any eligible employees who are either to be out on FMLA leave at the time the business is sold (or have announced to the seller plans to take FMLA leave soon after the sale takes place), so that the buyer is aware of its ''successor in interest'' obligations under FMLA to maintain health benefits during the FMLA leave periods and to restore the employees at the conclusion of their FMLA leave, there is no ''allocation'' of responsibility under FMLA based on whether the seller and buyer have exchanged such information. The regulations are revised to make clear that an eligible employee of a covered predecessor employer who commences FMLA leave before the business is sold to a ''successor in interest'' employer is entitled under FMLA to be restored to employment by the successor employer without limitation.

The Employers Association of New Jersey questioned whether a successor employer had to meet coverage requirements (§ 825.104) in order to be considered a ''successor in interest.'' FMLA's statutory definition of ''employer'' (§ 101(4)) includes ''any successor in interest of an employer,'' which we interpret to include successor employers that employ fewer than 50 employees after the succession of interest. FMLA's obligations in such cases, however, are limited to completing the cycle of any FMLA leave requests initiated by employees of the *predecessor* employer, where the employees met the eligibility criteria at the time the leave was requested.

The Contract Services Association of America posed a series of questions related to FMLA's ''successor in interest'' obligations as applied to service contractors performing on Federal service contracts covered by the McNamara-O'Hara Service Contract Act (SCA). In the example posed, Employer A has lost a service contract (through recompetition) to Employer B. Employer B has been determined to be a ''successor in interest.'' In its bid proposal, Employer B did not include several positions which Employer A employed on the predecessor contract. One of the eliminated positions was occupied by an employee of Employer A who was on FMLA leave at the time of the succession of the contract to Employer B. The Association questioned whether Employer A would have to continue to maintain the employee on FMLA leave and maintain his or her group health benefits, or whether the employee could be terminated at the time of contract turnover, treating it as a layoff and a lack of work. Employer A would not have to maintain this employee on FMLA leave or maintain health benefits if it can demonstrate that the employee would not otherwise have been employed as a result of the loss of the contract. This could be demonstrated, for example, if other, similarly situated employees of Employer A did not otherwise continue their employment with Employer A on other contract work or in some other capacity. Because Employer B had no comparable position in its bid proposal, Employer B would not be obligated to hire this employee either.

The Association also asked if an employee on an SCA-covered contract were on FMLA leave at the time of contract transition to another contractor, would a ''successor in interest'' contractor be required to hire the employee under the job protection provisions of FMLA? The answer is ''yes'', if the employee's position continues to exist under the successor contract (as distinguished from the facts in the previous example, above). The successor contractor would not have a right to ''non-select'' the employee in this example at the end of the employee's FMLA leave. The outgoing contractor would *not* be required to maintain this employee's group health plan benefits for the remaining period of FMLA leave extending beyond the contract changeover, but the ''successor in interest'' contractor would be required to do so, and to restore the employee to the same or an equivalent position.

With respect to the remaining questions posed by the Association, it would be helpful for a predecessor contractor to furnish a list to the successor in interest of the predecessor's employees who are on FMLA leave when contractors change, and a list of benefits being provided (so they may be maintained and/or restored at the same levels). If lists are not furnished, the successor in interest should attempt to determine its obligations without waiting for the employees on FMLA leave to apply for employment with the successor.

Public Agency (§ 825.108)

The State of Nevada personnel department objected to the designation of a State as a single employer, suggesting that certain individual ''public agencies'' of a State should be treated as separate employers based on criteria set forth in an administrative letter ruling issued by the Wage-Hour Administrator on October 10, 1985.

Treating a State as a single employer under FMLA is a result required by the statute. FMLA defines the term ''employer'' to include any ''public agency'' as defined in § 3(x) of the Fair Labor Standards Act, which defines ''public agency'' to include the

government of a State or political subdivision of a State, and any agency of a State or a political subdivision of a State. The 1985 letter ruling cited by the commenter was issued before the enactment of the 1985 FLSA Amendments, under which the Congress included specially-tailored provisions for employees of public agencies to address special situations where they volunteer their services under certain conditions, and perform work in fire protection, law enforcement, or related activities on special details when hired for such work by a ''separate and independent employer.'' Special rules to address FLSA's particular statutory provisions are found in 29 CFR Part 553; § 553.102(b) provides that the determination of whether two agencies of the same State government constitute the same public agency can only be made on a case-by-case basis, but one factor supporting the conclusion that they are separate is whether they are treated separately for statistical purposes in the Census of Governments issued by the Bureau of the Census, U.S. Department of Commerce. Section 825.108(c) of the FMLA rules similarly provides for following the Census of Governments publication in resolving particular questions. FLSA's special rules for defining a public agency employer for other unique purposes mandated under FLSA are not analogous to FMLA leave situations, and we do not believe that any similar special rules are required under FMLA.

The Office of Legislative Auditor, State of Louisiana questioned the status of an agency of a State's legislative branch under FMLA, where the agency is not subject to the State's civil service regulations and is otherwise considered not covered under the FLSA.

Section 101(3) of the FMLA defines the term ''employee'' to have the same meaning as defined in § 3(e) of the Fair Labor Standards Act. Section 3(e)(2)(C) of the FLSA excludes from this definition of ''employee'' individuals who are not subject to the civil service laws of the State and who are employed in the legislative branch of that State (other than the legislative library). Thus, employees excluded from the FLSA statutory definition of ''employee'' would similarly be excluded from coverage under the FMLA.

The Government Finance Officers Association felt that a public employer, as a single employer, should not be required to notify all of its employees about FMLA entitlements because many employees may misunderstand that they are not eligible for FMLA leave.

FMLA imposes a statutory obligation on all covered employers to post the notice to employees informing them of FMLA's provisions, regardless of whether the employer has any ''eligible'' employees. Public agencies are covered ''employers'' without regard to the number of employees employed. There is no authorized exception that relieves covered employers from this notice requirement when they have no ''eligible'' employees. The DOL poster, however, includes the employee eligibility criteria and makes it apparent that FMLA's entitlement to leave applies only to ''eligible'' employees. The individualized, specific notice to employees required to be furnished in response to FMLA leave requests applies only to FMLA-''eligible'' employees.

Section 825.108(b) states that the U.S. Bureau of the Census' Census of Governments will be used to resolve questions about whether a public entity is distinguishable from another public agency. In this regard, the Office of the Treasurer, State of Ohio asked that more information be provided on how the census information can be accessed.

The Census Bureau takes a census of governments at five-year intervals. Volume 1, Government Organization, contains the official count of the number of State and local governments. It includes tabulations of governments by State, type of government, size, and county location. Also produced is a universe list of governmental units, classified according to type of government. Copies of Volume 1 and subsequent volumes are available from the Superintendent of Documents, U.S. Government Printing Office, Washington, D.C. 20402; District Offices of the U.S. Department of Commerce; and Regional and selective depository libraries. For a list of all depository libraries, write to the U.S. Government Printing Office, 710 N. Capitol Street, NW, Washington, D.C. 20402.

Federal Agency Coverage (§ 825.109)

The Farm Credit Administration, the Chesapeake Farm Credit, and a number of other farm credit system institutions argued that system institutions should not be listed in this section dealing with Federal agencies, citing express legislation that defederalized system institution employees.

These commenters are correct. This section of the regulations has been revised to delete the former reference to the Farm Credit Administration. These employees will be treated in the same manner as employees in the private sector when determining employer coverage and employee eligibility under FMLA.

Section 825.109(b) further states that employees of the Library of Congress are covered by Title I provisions of FMLA, rather than Title II which is administered by the Office of Personnel Management (OPM). A review of applicable legislative authority indicates that employees of the Library of Congress should be covered by Title II of FMLA within the jurisdiction of OPM. The regulations have been revised to delete the Library of Congress from coverage under Title I.

12 Months and 1,250 Hours of Service (§ 825.110)

To be eligible for FMLA leave, an employee must have been employed for at least 12 months with the employer, and the 12 months need not be consecutive. Several commenters stated that determining past employment was burdensome, too indefinite, and urged various limitations on a 12-month coverage test. The Burroughs Wellcome Company suggested excluding any employment experience prior to an employee resignation or employer-initiated termination that occurred more than two years before the current date of reemployment. Another commenter, the State of Kansas Department of Administration, suggested limiting the 12 months of service to the period immediately preceding the commencement of leave. The ERISA Industry Committee argued that the 12 months should be either consecutive months, or 12 months of service as computed under bridging rules applicable to employer's pension plans.

Many employers require prospective employees to submit applications for employment which disclose employees' previous employment histories. Thus, the information regarding previous employment with an employer should be readily available and may be confirmed by the employer's records if a question arises. Further, there is no basis under the statute or its legislative history to adopt these suggestions.

A number of commenters urged clarifications with respect to the determination of 1,250 hours of service during the 12-month period preceding the commencement of leave. The Equal Rights Advocates argued that any FMLA leave taken in the previous 12 months should be included in the calculation of the requisite 1,250 hours of work. The State of New York Metropolitan Transportation Authority stated that it was not clear whether time paid but not worked (*i.e.*, vacation and personal days) should be counted and urged limiting the determination to only

actual hours worked. The Edison Electric Institute made the same observation but noted that the standard in § 825.105 for determining coverage—50-employee test—is based on employees appearing on the employer's payroll. In addition to vacation time, the Society for Human Resource Management asked whether overtime hours worked are to be included in the calculation. The Air Line Pilots Association also urged inclusion of all compensated hours (vacation, holiday, illness, incapacity, lay-off, jury duty, military duty, official company business, leave of absence or official union business) in determining the 1,250 hours of service. Finally, the Tennessee Association of Business requested clarification of the status of employees who are temporarily laid off for 2 or 3 weeks because of a plant shutdown.

The eligibility criteria are set forth in § 101(2) of FMLA as a statutory definition of ''eligible employee.'' One component of the definition (§ 101(2)(C)) states that for purposes of determining whether an employee meets the hours of service requirement, the legal standards established under § 7 of the FLSA shall apply. The legislative history explains that the minimum hours of service requirement is meant to be construed in a manner consistent with the legal principles established for determining hours of work for payment of overtime compensation under § 7 of the FLSA and regulations under that act, citing specifically 29 CFR Part 785 (Hours Worked [Under the FLSA]) and referencing 29 CFR 778.103 (which in turn states that the principles for determining what hours are hours worked within the meaning of the FLSA are discussed in 29 CFR Part 785). ''Hours worked'' does not include time paid but not ''worked'' (paid vacation, personal or sick leave, holidays), nor does it include unpaid leave (of any kind) or periods of layoff. Whether the hours are compensated or uncompensated is not determinative for purposes of FMLA's 1,250-hours-of-service test. The determining factor in all cases is whether the time constitutes hours of work under FLSA. Because overtime hours worked are ''hours worked'' within the meaning of FLSA, they are included.

The National Restaurant Association noted that the determination of the 1,250 hour/12 months test must be made as of the date leave commences; whereas the 50 employee within 75 miles test is to be determined when the employee requests FMLA leave. The Association argued that the same date should be used for determining all eligibility requirements. The USA Chamber of Commerce argued that § 825.110(d) as written forces an employer to avoid providing an ineligible employee with an estimated date of eligibility, a potential benefit for both employee and employer, because the employer that makes such an estimate is precluded from later challenging the employee's eligibility. This, according to the Chamber, ignores the very real possibility that an employee may reach the projected date and still not be eligible.

As explained in the preamble of the Interim Final Rule, the purpose and structure of FMLA's notice provisions intentionally encourage as much advance notice of an employee's need for leave as possible, to enable both the employer to plan for the absence and the employee to make necessary arrangements for the leave. Both parties are served by making this determination when the employee requests leave. Tying the worksite employee-count to the date leave commences as suggested could create the anomalous result of both the employee and employer planning for the leave, only to have it denied at the last moment before it starts if fewer than 50 employees are employed within 75 miles of the worksite at that time. This would entirely defeat the notice and planning aspects that are so integral and indispensable to the FMLA leave process. Accordingly, no changes have been made in response to the comments received from the National Restaurant Association and the Chamber of Commerce of the USA.

Several commenters (Nationsbank Corporation and South Coast Air Quality Management District) indicated that the terms ''employee'' and ''eligible employee'' required clarification regarding independent contractors, contract employees, and consultants. The Dow Chemical Company suggested that students working in co-op programs approved by their schools should not be deemed an employee eligible for FMLA benefits.

FMLA's definitions of ''employ'' and ''employee'' are ''borrowed'' from the FLSA. If a particular arrangement in fact constitutes an employee-employer relationship within the meaning of the FLSA (and case law thereunder) as contemplated by the statutory definitions, and the ''employee'' satisfies FMLA's eligibility criteria, the employee is entitled to FMLA's benefits. A true independent contractor relationship within the meaning of the FLSA would not constitute an employee-employer relationship. Thus, an independent consultant operating his or her own business ordinarily would not be considered an ''employee'' of the business that hires the consultant's services. Employees hired for a specified term to perform services under contract (''contract employees'') would ordinarily be subject to FMLA if they otherwise meet FMLA's 12 months and 1,250-hours-of-service (with the ''employer'') eligibility criteria. It has been our experience that such persons rarely qualify as independent contractors under the FLSA, and, therefore, they would rarely qualify as independent contractors under FMLA. There would be no authority under the statute to exclude students working in co-op programs approved by their schools if the arrangement otherwise meets the criteria for an employee-employer relationship. Many such students, however, may not be ''eligible'' under FMLA if they have not worked for the employer for at least 12 months and for at least 1,250 hours.

With respect to the 1,250 hours of service test, the California Rural Legal Assistance, Inc. expressed concern about situations where employers fail to keep required records of hours worked, and urged a reference to the ''Mt. Clemens Pottery rule'' as being applicable to such situations.

This comment refers to the U.S. Supreme Court's decision in *Anderson v. Mt. Clemens Pottery Co.*, 328 U.S. 680 (1946), which provided a lighter burden of proof for employees where employers failed to maintain required records. The regulations already provide that eligibility is presumed for FLSA-exempt employees who have worked at least 12 months. The regulations have been revised in this section to provide the same presumption where FMLA-covered employers with 50 or more employees fail to keep records required for purposes of establishing employee eligibility for FMLA leave.

The American Federation of Teachers and the National Education Association expressed concern that employers may intentionally reduce or otherwise manipulate an employee's hours to avoid FMLA eligibility, and urged that such conduct be treated as a violation of the Act. This matter will be addressed in § 825.220(b) (the ''prohibited acts'' section of the regulations) by providing that FMLA-covered employers that intentionally limit or manipulate employees' work schedules to foreclose their eligibility for FMLA leave will be held in violation of the provisions of FMLA and these regulations which prohibit interfering with employees' exercise of rights.

The Air Line Pilots Association (ALPA) requested clarification of the

discussion in the preamble about determining 1,250 hours of service, specifically the statement that on-call time includes ''* * * hours of service where it meets the FLSA hours-worked requirements (29 CFR Part 785.17), as would ground time for flight crews.'' According to the ALPA, the term ''ground time'' requires clarification as applied in the airline industry, which typically distinguishes between ''flight'' time (time an airplane is actually in the air from take-off to landing), ''duty'' time (hours a pilot is on duty beginning with checkin for departure until returning to the domicile) and ''reserve'' time (designated on-call period when pilot must be available to be reached by phone, and must be able to report to the airport within one to three hours' notice). Pilots typically receive different rates of pay for the reserve time, the flight time and an hourly per-diem for all duty time. The commenter argues that all hours credited for such pay should be credited for hours of service.

Crediting the time attributable to all such pay would exceed the number of actual hours worked within the meaning of the FLSA and thus be contrary to FMLA's provisions on crediting hours of service based on FLSA ''hours worked'' principles. Hours of service would normally include all ''duty'' time. ''Reserve'' time would not be included unless employees have further restrictions on their time so that they would be unable to use the time for their own purposes.

The International Brotherhood of Teamsters argued that the 1,250 hours of service test as currently defined effectively precludes coverage of airline crew members under FMLA. While § 825.110(c) applies FLSA principles for determining hours of service, the commenter notes that section 13(b) of the FLSA excludes any employee of a carrier by air subject to the provisions of Title II of the Railway Labor Act from the Act's provisions in section 207. According to the commenter, airline crew members' work schedules and pay formulas are predicated on ''flight hours,''—generally amounting to one-third of the hours of employees covered by the FLSA—and flight crew members are prohibited by regulation from exceeding 1,000 flight hours in a 12-month period. The commenter contends that it is improper to compare flight crew ''hours of service'' with the ''hours of service'' performed by FLSA-covered employees and that airline crew members should be specifically exempted from the minimum hours of service requirement.

Section 13(b) of the FLSA provides exemptions from FLSA's requirement to pay overtime compensation in certain cases; they are not exemptions from the rules on what constitutes ''hours worked'' within the meaning of the FLSA. The fact that a particular class of employee is exempt from overtime under FLSA § 13(b) has no impact on the applicability of FLSA's ''hours worked'' rules under 101(2)(C) of the FMLA. Because the eligibility criteria are statutory, DOL lacks the authority to exempt airline crew members from the minimum hours of service criteria. As pointed out above, however, other ''duty'' time would normally be hours of service, in addition to the flight time.

50 Employees within 75 Miles (§ 825.111)

One of the tests for employee eligibility for FMLA leave requires that there be 50 employees employed by the employer within 75 miles of the worksite. This section described how ''worksite'' is construed and how to measure the 75 miles under this test.

The Equal Rights Advocates questioned measuring the 75 mile requirement by road miles and advocated a broader interpretation such as actual mileage between two employment facilities. The Medical Group Management Association stated that measuring a radius around a single point using road miles was very difficult and suggested a standard of traveling ''75 miles in any direction using public surface transportation.''

The regulations have been clarified by deleting the reference to ''radius,'' a term not found in the statute. The 75-mile distance will be measured by surface miles using available transportation by the most direct route between worksites.

The Institute of Real Estate Management and 29 other associated real estate management companies complained that the 75-mile rule for determining employee eligibility creates unique hardships for most property management companies and could cause serious economic harm in the absence of industry-specific modifications.

The National Association of Temporary Services was also concerned over the impact of the 50-employee/75-mile eligibility test on temporary help offices, noting that most temporary help offices operate with very small office staffs but on any given day may have a significant number of temporary employees assigned to customer worksites. Because temporaries assigned to customers within 75 miles of the office are included in the eligibility determination, staff employees of two or three person offices become eligible for FMLA leave, which, according to the commenter, works a hardship on small temporary help offices. The commenter urged an exception which would permit such offices to exclude from the eligibility test those temporary employees assigned out of any particular office—temporaries would still be eligible if secondary employers have a total of 50 employees within 75 miles of their worksite. In support of this position, the commenter points to a colloquy between Congressman Derrick and Congressman Ford on H.R. 1 (*Cong. Rec.* 139, H396–7 (Feb. 3, 1993)) in which Congressman Ford indicated that the matter of temporary help offices with small staffs would be an appropriate subject for rulemaking and his hope that implementing regulations would address such situations taking into account the broad purpose of the Act to provide protection to as many employees as possible and, at the same time, the legitimate concerns of small businesses.

Employees employed by a temporary help office have, as their ''single site of employment'' worksite under FMLA, the site from which their work is assigned (*i.e.*, the temporary help office). Thus, *all* temporary employees assigned from the temporary help office, regardless of whether the customers' worksites are within 75 miles of the temporary help office, are included in the employee count for the temporary help office in determining if staff employees are eligible for FMLA leave. This provision, in our judgment, is required by the express intention of the Congress in the committee reports that the WARN Act regulations be used to determine ''worksite.'' We believe that the implementing regulations accurately reflect, consistent with the express confines of the statute itself, the Congress' broad purpose to provide FMLA's protection to as many employees as possible while, at the same time, considering the legitimate concerns of small businesses.

Section 825.111(d) provides that eligibility determinations are to be made by employers when the employee requests the leave; once eligibility has been established in response to the request, subsequent changes in the number of employees employed at or within 75 miles of the employee's worksite will not affect the employee's eligibility or leave once commenced. These provisions attracted considerable comment.

The California Rural Legal Assistance, Inc. argued that using the date the employee requests leave as the ''trigger'' date will deprive eligibility to many seasonal employees, especially if they

give the requisite 30-days notice, because the 50-employee threshold may not be reached until the peak employment season. The commenter urges an alternate test for seasonal and other employers whose workforce varies greatly during the year, in particular that the test should allow a determination of eligibility at the time of the request if the employer can be expected to have at least 50 employees during any period in which FMLA leave is to be taken. This commenter would also apply such a test for teachers because many teachers are not actually under contract until just before or even after the school year has begun. In the alternative, the commenter suggested a position that an employee should be considered on the payroll as long as he or she is on an involuntary layoff with a reasonable expectation of returning to work within a reasonable period of time.

The Women's Legal Defense Fund, the Service Employees International Union, and the United Paperworkers International Union also expressed concern about determining eligibility from an employee count on a single day, *i.e.,* date of request, stating that such a test is arbitrary and subject to wide variation due to workforce fluctuations. They urged adoption of the counting method in the Act for determining employer coverage on the grounds that it is the only counting method statutorily based and is consistent with the legislative history. Thus, under this position, an employee would be eligible for FMLA leave if the employer has employed 50 or more employees within 75 miles of the employee's worksite for each working day during each of 20 or more calendar workweeks in the current or preceding calendar year.

A number of commenters stated that the ''date of request'' as a trigger date would be burdensome for employers in cyclical industries. Several commenters (California Department of Fair Employment and Housing and the Greater Cincinnati Chamber of Commerce) endorsed the option discussed in the preamble to the interim final rule: ''* * * where notice is given 30 or more days prior to the commencement of leave, the count would be made on the 30th day preceding the start of leave, or, at the employer's option, as of the date leave is requested; where 30 days notice is not given, the count would be made at the time notice is given or the date leave begins, whichever is earlier.'' The Society of Human Resource Management supported a trigger date of ''30 days prior to the onset of leave.'' To accommodate the particular needs of seasonal employers under the ''date of request'' trigger date, Southern Electric International, Inc. suggested that employers be permitted to cancel or reduce requested leave if the employee count falls below some reasonable number, *i.e.,* 40, by the time the leave is to be taken. The National Restaurant Association argued that the same date should be used for determining all eligibility requirements and the law firm of Sommer & Barnard also recommended a uniform eligibility criteria determination date, endorsing the ''date of commencement of leave.'' The United Paperworkers International Union also endorsed uniformity in the methods of counting eligible employees and covered employers.

The USA Chamber of Commerce noted that under § 825.111(d) eligibility is a continuing, day-to-day determination, even during FMLA leave, and that an employee who is initially ineligible can subsequently become eligible. The commenter argues that the rationale should be consistent: if an ineligible employee can become eligible, then an eligible employee should be able to subsequently become ineligible and, thus, not be entitled to continue FMLA leave.

The Department has given careful consideration to all of the comments submitted in connection with the rule for determining employee eligibility based on the number of employees maintained on the payroll as of the date that an employee requests leave. We see no justifiable basis for altering our earlier policy decisions as reflected in the Interim Final Rule. In our view, none of the recommendations suggest a course that would be entirely consistent with the literal language of the FMLA, its remedial purpose, or the expressions of Congressional intent contained in the legislative history. Congress directly addressed the treatment to be accorded seasonal, temporary and part-time employees by establishing statutory employer coverage and employee eligibility criteria. The Act exempts smaller and certain seasonal businesses by limiting coverage to employers with 50 or more employees in 20 or more calendar weeks of the year. It does not cover part-time or seasonal employees working less than 1,250 hours a year. To be eligible for leave, an employee must have worked for the employer for at least 12 months and for at least 1,250 hours during the 12-month period preceding the commencement of the leave. The employer must also employ at least 50 employees within 75 miles of the employee's worksite. Given Congress' specific treatment of these issues in the legislation, DOL lacks authority to write special rules for determining employee eligibility for seasonal workers in ways that depart from the statutory standards adopted in the legislation.

As explained in the preamble of the Interim Final Rule (and as noted above), the purpose and structure of FMLA's notice provisions intentionally encourage as much advance notice of an employee's need for leave as possible, to enable both the employer to plan for the absence and the employee to make necessary arrangements for the leave. Both parties are served by making this determination when the employee requests leave. But, at the same time, both parties need to be able to rely on the commitments they are making. Tying the worksite employee-count to the date leave commences as suggested could result in both the employee and the employer planning for the leave, only to have it denied at the last moment before it starts if fewer than 50 employees are employed within 75 miles of the worksite at that time. This would entirely defeat the notice and planning aspects that are an integral part of the FMLA leave process. The same would be true if employers were permitted to cancel or reduce requested leave if the employee count fell below some arbitrary number (*e.g.,* 40) at the time leave was being taken. As explained in the preamble to the Interim Final Rule, use of both a fixed date and the same date for determining employer coverage were previously considered and rejected as being inconsistent with the literal language of the Act and the legislative history, which both use the present tense in describing ''eligible'' employees (*i.e.,* employee is eligible if employed at least 12 months by the employer ''* * * with respect to whom leave *is* requested * * *''; but excludes any employee ''* * * *at* a worksite at which such employer *employs* less than 50 employees if the total * * * [within 75 miles] *is* less than 50.'').

Accordingly, while clarifications are included to more carefully explain the applicable principles, no significant changes are included in this section to alter the policy on the timing of determining employee eligibility.

The term ''worksite'' also generated considerable comment. The Los Angeles County Metropolitan Transportation Authority and Society for Human Resource Management stated that additional guidance was needed to determine eligibility, particularly with respect to salespersons who work out of their homes. The International Organization of Masters, Mates & Pilots stated that the applicable ''worksite'' in the case of maritime employment should be defined as the home office of

the employer from which the job assignment originates, and the United Paperworkers International Union stated that, in the case of workers without a fixed worksite, the reference point should be those employees defined in the bargaining unit by any applicable collective bargaining agreement. For employees who typically have no fixed worksite, the USA Chamber of Commerce urged a provision that makes clear that an employee has only one worksite for purposes of making eligibility and coverage determinations.

In the case of pilots and flight crew members, the Air Line Pilots Association, Association of Professional Flight Attendants and Independent Federation of Flight Attendants contend that the characterization of a home base as an employee's worksite would be inappropriate in the airline industry because the actual ''worksite'' ranges across a particular carrier's entire route system due to the availability and flexibility of the large number of employees employed in such job categories. They argue that employees at worksites with less than 50 employees within 75 miles should be eligible for FMLA leave if the employer (airline) employs more than 50 employees at all of its worksites and such employer can replace the employee on leave with another current employee through an employer-wide seniority system in the affected job classification.

Many of the comments reflect a misunderstanding of the ''worksite'' concept under the FMLA regulations. FMLA's legislative history explains that when determining if 50 employees are employed by the employer within 75 miles of the worksite of the employee intending to take leave, the term ''worksite'' is intended to be construed in the same manner as the term ''*single* site of employment'' under the WARN Act regulations (20 CFR Part 639). The legislative history further states that where employees have no fixed worksite, as is the case for many construction workers, transportation workers, and salespersons, such employees' ''worksite'' should be construed to mean the single site of employment to which they are assigned as their home base, from which their work is assigned, or to which they report. The regulations included these concepts.

Accordingly, salespersons who work out of their homes have as their single site of employment the site ''from which their work is assigned or to which they report'' (for example, the corporate or regional office). Their homes are not their ''single site of employment'' in any case. Tracking the number of employees in a collective bargaining unit, or defining the worksite for flight crew members as a carrier's entire route system, would deviate significantly from the legislative history's discussion of the applicable principles and cannot be adopted as suggested in the comments. (Members of flight crews thus have as their ''worksite'' the ''site to which they are assigned as their home base, from which their work is assigned, or to which they report.'')

One commenter, Employers Association of New Jersey, indicated that more guidance was needed on what employees are to be counted. The commenter asked whether only eligible employees as defined in § 825.110 are counted, or are temporarily inactive employees counted, such as those on leave of absence, strike, *etc.* As noted above, the employee count must include all employees of the employer who are ''maintained on the payroll,'' including part-time, full-time, eligible and non-eligible employees. It must also include employees on paid or unpaid leaves of absence. Employees who have been laid off (whether temporary, indefinite, or long-term) are *not* included. (See the discussion of related issues under § 825.105.) In effect, the test of whether an individual is counted as an ''employee'' depends upon whether there is a continuing employment relationship, and being ''maintained on the payroll'' is used as a proxy for establishing the continuing nature of the relationship.

Leave Entitlement (§ 825.112)

Section 825.112 sets forth the basic statutory circumstances for which employers must grant FMLA leave. A number of commenters addressed these circumstances with suggestions, recommendations, or requests for clarifications. For example, Lancaster Laboratories suggested that an employer should not be required to approve prenatal care visits if such appointments could be scheduled outside of normal working hours. United Federal Credit Union felt that employers should be able to place a cap on how many employees may be on FMLA leave at any one time, with discretion linked to business needs. Another commenter indicated that FMLA leave should be allowed for a sister or brother living with the employee. The Society for Human Resource Management asked whether the terms ''placement * * * for adoption'' covered the situation where a child was placed in a new home for adoption and time was needed for bonding between the new parent and the child. The Society also asked if a pregnant employee were well enough to return to work after six weeks, but had requested 12 weeks, could the employer require the employee to return to work after six weeks. Oregon Bureau of Labor and Industries observed that § 825.112(d) states there is no age limit on a child being adopted or placed for foster care, but § 825.113(c) defines ''son or daughter'' to be a person *under* the age 18, or *18 or older and incapable of self-care,* and questioned whether FMLA leave was available for adoption of a child age 18 or older who is *capable* of self-care. The Equal Employment Advisory Council argued, with respect to an employee who marries and requests FMLA leave to be with new stepchildren, that such leave should be explicitly prohibited unless the employee formally adopts the stepchildren.

California Department of Fair Employment and Housing and the law firm of Fisher and Phillips urged § 825.112 be expanded to incorporate provisions stated elsewhere in the regulations. Specifically, they argued that the definition of ''son or daughter'' in § 825.113 as it relates to the availability of FMLA leave to an employee who stands *in loco parentis* to a child should be added to § 825.112(a)(1), and that § 825.112(d) should be amended to reference the limitation in § 825.203 on the use of intermittent leave for purposes of birth, adoption or placement of a foster child that such leave is available only if the employer agrees. Sommer & Barnard noted that while an employee may be eligible for FMLA leave before ''the actual date of birth'' or ''actual placement,'' there is no provision in the regulations that would permit an employer to require verification that leave requested for such purposes is for a statutory purpose.

With respect to scheduling prenatal care doctor's visits, the Act and regulations require that in any case where the need for leave is foreseeable based on planned medical care, the employee shall make a bona fide, reasonable effort to schedule the leave in a manner that does not unduly disrupt the employer's operations (subject to the approval of the employee's (or family member's) health care provider). However, it would be contrary to the statute for an employer to place any cap on the number of employees who could be eligible for FMLA leave at any one time, or for the regulations to require employers to grant the same type of leave entitlement for a sister or brother living with the employee as FMLA provides for a spouse (although employers could adopt more generous leave policies than the

minimums established by FMLA). With respect to leave for the birth of a child, the statute entitles an employee to FMLA leave for a period of up to 12 weeks for the birth *and care* of a child. Under the circumstances described by the Society for Human Resource Management, the employee may not be required to return to work after six weeks if the employee desires 12 weeks of FMLA leave for the birth of her child.

In response to the question on whether FMLA's leave entitlement for placement for adoption includes ''bonding'' time between the parent and child, we note from the legislative history's discussion of the need for family and medical leave legislation that:

Adoptive parents also face difficulties in the absence of a reasonable family leave policy. Most adoption agencies require the presence of a parent in the home—some for as long as four months—when a child is placed with the family to allow them adequate time for proper bonding. * * *

The legislative history's discussion of the leave provisions themselves provides:

Section 102(a)(2) requires that leave provided under § 102(a)(1) (A) or (B) to care for a newborn child *or a child newly placed with the employee for adoption or foster care be taken before the end of the first 12 months following the date of the birth or placement.* * * *

Clearly, the intent of FMLA's leave entitlement in the case of leave for placement of a child with the employee for adoption or foster care includes ''bonding'' time with the newly-placed child, during the 12 months following the date of placement.

In response to the commenter who questioned whether FMLA leave is available for adoption of a child age 18 or older who is *capable* of self-care, upon reexamination of the statutory definitions and leave entitlement provisions of the Act, we have concluded that the availability of leave for adoption of a child age 18 or older is limited to those who are *incapable* of self-care because of a mental or physical disability, consistent with the statutory definition of ''son or daughter'' in § 101(12) of the FMLA. The regulations have been revised to delete the statement that there is no maximum age limit for a child placed for adoption or foster care. Regarding the employee who marries and requests FMLA leave to be with new stepchildren, FMLA leave would only be available if the employee in that case formally adopted the stepchildren, as the commenter pointed out. However, if one of the children subsequently has a serious health condition, the stepparent would be entitled to FMLA leave to care for the child.

Many comments suggesting clarification or reiteration of provisions contained elsewhere in the regulations are being adopted. The regulations are also being revised at § 825.113 to permit an employer to request that employees provide reasonable documentation that verifies the legitimacy of an FMLA leave request, *i.e.,* that requested leave is for a qualifying statutory purpose. Reasonable documentation of a qualifying reason for FMLA leave can take the form of a simple signed statement by the employee. The employer's policies in this area should be communicated in advance to employees and be applied uniformly, and employees must be given a reasonable opportunity to respond.

Section 825.112(e) provides that ''State'' action must be involved in foster care placement to qualify for FMLA leave. The Community Legal Services, Inc. and Women's Legal Defense Fund stated that the ''State'' involvement requirement was not supported by the statute, legislative history, or sound public policy, and argued that the statutory definition of a ''son or daughter,'' which includes a ''child of a person standing *in loco parentis,*'' implies that FMLA leave should be available whenever an employee takes primary responsibility for the care of a child with the intention of adopting or otherwise having day-to-day caretaking responsibility for that child. Thus, for example, parents of addicts who assume responsibility as primary caretakers for the addicts' children is a form of ''foster'' care in which FMLA leave should be available to such parents.

Section 102(a)(1)(B) of FMLA entitles an eligible employee to take FMLA leave *''[b]ecause* of the *placement* of a son or daughter *with the employee* for *adoption or foster care*'' (emphasis added). Thus, the entitlement to leave under this section of the Act relates only to the actual *placement* with the eligible employee of an adopted or foster child. The act of providing ''foster care,'' in and of itself, is not a qualifying reason for taking FMLA leave under the statute. On the other hand, in the example of parents of addicts who assume the primary, day-to-day responsibilities to care for and financially support the addicts' children, the *in loco parentis* relationship thus established could entitle the *in loco parentis* parents to take FMLA leave under a different section of the FMLA, § 102(a)(1)(C), if the *in loco parentis* parent was needed to care for the ''child'' (of the person standing *in loco parentis)* for a serious health condition (subject to the Act's medical certification provisions). FMLA's legislative history fully supports this view:

The terms ''parent'' and ''son or daughter'' * * * reflect the reality that many children in the United States today do not live in traditional ''nuclear'' families with their biological father and mother. Increasingly, those who find themselves in need of workplace accommodation of their child care responsibilities are not the biological parent of the children they care for, but their adoptive, step, or foster parents, their guardians, or sometimes simply their grandparents or other relatives or adults. This legislation deals with such families by *tying the availability of ''parental'' leave to the birth, adoption, or serious health condition of a ''son or daughter'' and then defining the term ''son or daughter'' to mean ''a biological, adopted, or foster child, a stepchild, a legal ward, or a child of a person standing in loco parentis* * * *.'' * * *

Definition of Spouse, Parent, Son or Daughter (§ 825.113)

FMLA entitles an eligible employee to take leave ''in order to care for the spouse, or a son, daughter, or parent, *of the employee,* if such spouse, son, daughter, or parent has a serious health condition'' (emphasis added). Section 825.113(a) defines the term ''spouse'' to mean a husband or wife as defined or recognized under State law for purposes of marriage, including common law marriage in States where it is recognized. A considerable number of comments urged that this definition be broadened to include domestic partners in committed relationships including same-sex relationships, or, in the alternative, to include all unions recognized by State or local law. The Society for Human Resource Management questioned whether an employer located in one State which does not recognize common law marriages would be required to grant FMLA leave to its employees with common law spouses who reside in another State that recognizes common law marriages. William M. Mercer, Inc. also recommended clarification of which State law would be controlling when the employee works in a different State.

FMLA defines the term ''spouse'' to mean ''a husband or wife, as the case may be.'' In discussing this definition during Senate consideration of the legislation, Senator Nickles noted:

* * * This is the same definition that appears in Title 10 of the United States Code (10 U.S.C. 101).

Under this amendment, an employer would be required to give an eligible female employee unpaid leave to care for her husband and an eligible male employee unpaid leave to care for his wife. No employer would be required to grant an eligible employee unpaid leave to care for an unmarried domestic partner.

This simple definition will spare us a great deal of costly and unnecessary litigation. Without this amendment, the bill would invite lawsuits by workers who unsuccessfully seek leave on the basis of their unmarried adult companions. (Cong. Rec. (S 1347), Feb. 4, 1993.)

Accordingly, given this legislative history, the recommendations that the definition of ''spouse'' be broadened cannot be adopted. The definition is clarified, however, to reference the State ''in which the employee resides'' as being controlling for purposes of an employee qualifying to take FMLA leave to care for the employee's ''spouse'' with a serious health condition.

Section 825.113(b) of the regulations defined ''parent,'' as provided in § 101(7) of the FMLA, to mean a biological parent or an individual who stands or stood in loco parentis to an employee when the employee was a child. The regulatory definition noted that the term did not include a parent ''in-law.'' Several commenters (City of Alexandria, Virginia; Fairfax Area Commission on Aging; Northern Virginia Aging Network; the Brooklyn and Green Mountain Chapters of the Older Women's League; Sisters of Charity of Nazareth; Retail, Wholesale and Department Store Union; and University of Vermont) viewed the regulatory definition as too restrictive, recommending in some instances that the term ''parent'' be broadened to specifically include parents ''in-law.'' (An additional 107 cards or letters were received from individuals endorsing this view.)

Standard rules of statutory construction require that we interpret the availability of FMLA leave for a ''parent'' in a manner consistent with FMLA's definition of ''parent,'' which is limited to the employee's biological parent or an individual who stood *in loco parentis* to the employee when the employee was a child, and does not extend to a parent ''in-law.'' Moreover, the leave entitlement under § 102(a)(1)(C) of FMLA is expressly limited to ''* * * care for the * * * parent, *of the employee,* if such * * * parent has a serious health condition.'' Thus, each eligible spouse may take qualifying FMLA leave to care for his or her own biological (or *in loco parentis*) ''parent'' who has a serious health condition, but the leave entitlement cannot be extended by regulation to parents ''in-law.''

FMLA § 101(12) defines ''son or daughter'' in part as one who is under age 18, or age 18 or older and ''incapable of self-care because of a mental or physical disability.'' The Older Women's League, in commenting on the ''incapable of self-care'' provisions defined in § 825.113(c)(1), was concerned that requiring that an individual need active assistance or supervision to provide daily self-care in ''several'' of the ''activities of daily living'' would be interpreted to mean *three* or more, absent clarification, which they believe would unduly restrict eligibility for FMLA leave. The Consortium for Citizens With Disabilities, the Epilepsy Foundation of America, and the United Cerebral Palsy Association recommended that the definition of ''incapable of self-care'' be supplemented with additional criteria which more accurately reflect the needs of all people with disabilities, suggesting that ''instrumental activities of daily living'' or IADL's (activities necessary to remain independent) should be added to address the needs of people with mental and cognitive impairments.

In response to the comments received on this section, ''incapable of self-care'' is defined in the final rule to include, in addition to the ''activities of daily living,'' the ''instrumental activities of daily living,'' as recommended. We interpret ''several'' to mean more than two but fewer than many, i.e., three or more (see *Webster's; Black's Law*).

The Equal Employment Opportunity Commission (EEOC), in commenting on ''physical or mental disability'' in § 825.113(c)(2), noted that the DOL rule cited, as a cross-reference, EEOC's entire regulatory part under the Americans with Disabilities Act (ADA), 29 CFR 1630, for defining ''physical or mental disability.'' Because the current illegal use of drugs is not a disability within the meaning of the ADA, EEOC expressed concern that the broader cross-reference to the entire regulatory part could create confusion over whether an adult child currently engaging in the illegal use of drugs would be ''disabled'' for purposes of a parent qualifying to take FMLA leave. EEOC suggested that DOL be more specific in citing to the pertinent ADA regulations to foreclose the argument that ''physical'' or ''mental'' disability in this context would not include the current illegal use of drugs. We have adopted EEOC's suggestion in the final rule. An eligible employee's son or daughter who illegally uses drugs may be disabled for purposes of an eligible parent (employee) taking FMLA leave.

The University of Michigan includes in-laws, domestic partners, and other relatives within a broader definition of ''family'' for purposes of its family leave policies. The University suggested that the regulations enable employers that have extended their family leave policies to such ''non-traditional'' families to count as part of an employee's FMLA leave entitlement leave that is taken to care for such broader definitions of ''family.'' This issue is addressed in § 825.700 of the regulations, which discusses the effect of employer policies that provide greater benefits than those required by FMLA. We interpret the statute as prohibiting an employer from counting as a part of an employee's FMLA leave entitlement leave granted for a reason that does not qualify under FMLA.

The law firm of Orr and Reno, and the Chicagoland Chamber of Commerce, *et al.,* urged that in addition to medical certifications presently required, the regulations should include provision for requests relating to child care because it is not always obvious that the leave is justified, particularly with respect to a father or in foster care situations.

Although leave to provide ''child care'' would not ordinarily qualify as FMLA leave if the child is not a newborn (in the first year after the birth) and is otherwise healthy, FMLA leave is ''justified'' (*and* may not be denied by the employer) if it is taken for one of FMLA's qualifying reasons, including where a father wants to stay home with a healthy newborn child in the first year after the birth, or needs to be home to care for a child with a serious health condition, or for placement with the employee of a child for foster care. The regulations have been amended in § 825.113(d) to permit employers to require reasonable documentation from the employee for confirmation of family relationships.

Definition of ''Serious Health Condition'' (§ 825.114)

Section 101(11) of FMLA defines ''serious health condition'' to mean

* * * an illness, injury, impairment, or physical or mental condition that involves—

(A) inpatient care in a hospital, hospice, or residential medical care facility; or

(B) continuing treatment by a health care provider.

This scant statutory definition is further clarified by the legislative history. The congressional reports did indicate that the term was not intended

to cover short-term conditions for which treatment and recovery are very brief, as Congress expected that such conditions would be covered by even the most modest of employer sick leave policies. While the meaning of inpatient care is evident (*i.e.*, an overnight stay in the hospital, *etc.*), the concept of ''continuing treatment'' presents more difficult issues. Under the Interim Final Rule, ''*continuing* treatment'' required two or more visits to a health care provider or a single visit followed by a prescribed regimen of treatment, or a serious, incurable condition which existed over a prolonged period of time under the continuing supervision of a health care provider. When deciding upon the regulatory guidance for the definition in the Interim Final Rule, the Department relied heavily upon definitions and concepts from the Office of Workers' Compensation Programs. For example, under many State workers' compensation laws and the Federal Employees' Compensation Act (FECA), a three-day waiting period is applied before compensation is paid to an employee for a temporary disability. A similar provision was included in the FMLA rules; a period of incapacity of ''more than three days'' was used as a ''bright line'' test based on the references in the legislative history to serious health conditions lasting ''more than a few days.''

Eighty-eight comments were received on the regulatory definition of ''serious health condition.'' Many commenters objected to the language in § 825.114(a)(3), which provided that a period of incapacity of more than three calendar days was an indicator of a serious health condition, and § 825.114(b)(2), which defined continuing treatment as including one visit to a health care provider which results in a regimen of continuing treatment under the supervision of the health care provider, *e.g.*, a course of medication or therapy to resolve the health condition. Some contended that the ''more than three days'' test encouraged employees to remain absent from work longer than necessary for the absence to qualify as FMLA leave, or that the duration of the absence was not a valid indicator of serious health conditions that are very brief (*e.g.*, a severe asthma attack that is disabling but requires fewer than three days for treatment and recovery to permit the employee's return to work). Some commenters felt the three-day rule was unreasonably low and trivialized the concept of seriousness, suggesting it more appropriately defined a ''health condition'' rather than a ''*serious* health condition.''

Nine commenters (9 to 5, National Association of Working Women; Federally Employed Women; Women's Legal Defense Fund; Federal Express; Linda Garcia; Kerryn M. Laumer; Epilepsy Foundation of America; International Ladies' Garment Workers' Union; Service Employees International Union) stated that the three-day rule was contrary to the statute and legislative history. The Women's Legal Defense Fund and the Epilepsy Foundation of America pointed out that the House Education and Labor Committee specifically rejected a minimum durational limit during a markup of the bill. These commenters, together with the Consortium for Citizens with Disabilities, National Community Mental HealthCare Council, and United Cerebral Palsy Associations, contended that seriousness and duration do not necessarily correlate, particularly for people with disabilities; that a fixed time limit fails to recognize that some illnesses and conditions are episodic or acute emergencies which may require only brief but essential health care to prevent aggravation into a longer term illness or injury, and thus do not easily fit into a specified linear time requirement; and that establishing arbitrary time lines in the definition only creates ambiguity and discriminates against those conditions that do not fit the average. The Women's Legal Defense Fund made the observation from the legislative history that Congress intended the severity and normal length of disabling conditions to be used as ''general tests,'' not bright-line rules, and suggested that if a condition is sufficiently severe or threatening, duration is irrelevant.

The 9 to 5, National Association of Working Women, Los Angeles County Metropolitan Transportation Authority, Baptist Health Care, St. Vincent Medical Center, Chamber of Commerce of the USA, Chicagoland Chamber of Commerce, and Service Employees International Union, contended that a three-day absence requirement will inevitably result in employees with minor short-term afflictions unnecessarily extending their absences just to qualify for FMLA leave.

Fifteen commenters suggested extending the three-day absence requirement to a longer period, such as 5, 6, 7, or 10 days (Care Providers of Minnesota, Cincinnati Gas & Electric Company, Chicagoland Chamber of Commerce, Nevada Power Company, Federal Express, Chevron, PARC, Consolidated Edison Company of New York, Inc., Village of Schaumburg (Illinois) Human Resources, Food Marketing Institute, Society for Human Resource Management, Southwestern Bell Corporation, New York State Metropolitan Transportation Authority), two weeks (United HealthCare Corporation), or 31 days (the American Apparel Manufacturers Association, Inc., suggested that the definition should reflect the initial study by the U.S. General Accounting Office that estimated FMLA's cost impact, noting further that the three-day rule is significantly more lenient than the ''31 days or more of bed rest required to remedy the condition'' used by GAO).

The Ohio Public Employer Relations Association strongly objected to the three-calendar-day rule on the grounds that a single workday absence on Friday followed by a weekend would qualify (or a Monday absence following a weekend). The law firm of Sommer and Barnard stated that it was not clear from the regulations or comments in the preamble whether the three days are consecutive or non-consecutive calendar days of work. The Chamber of Commerce of the USA questioned whether the rule, as drafted, could be construed as requiring three cumulative days in a calendar year as opposed to three consecutive calendar days.

Several additional commenters urged that the period be measured by business or working days in lieu of calendar days, while still others distinguished ''consecutive'' calendar days of absence from ''consecutive'' work days of absence as alternative suggestions (*i.e.*, more than five consecutive work days or seven consecutive calendar days). The Hospital Council of Western Pennsylvania argued that the standard should be one of incapacity requiring absence from work for more than three ''consecutively scheduled workdays,'' as a workday standard is compatible with other sick leave and short-term disability programs and removes any doubt as to whether an employee was otherwise incapacitated and unable to work during days the employee was not scheduled to work. Chicagoland Chamber of Commerce commented that, with respect to an employee's own serious health condition, the qualifying standard pertains to work days and not calendar days, and yet the regulatory language would allow one to argue that an inability to carry out regular daily activities over the weekend counts toward the qualifying period. The Burroughs Wellcome Company emphasized that the committee reports clearly state that an employee must be absent *from work* for the required number of days and that absence from ''school or other regular daily activities''

relates only to a child's, spouse's, or parent's serious health condition.

The Chamber of Commerce of the USA and the National Association of Manufacturers recommended that DOL's definition of serious health condition adopt each State's waiting period for qualifying for workers' compensation benefits, noting that many States use as much as seven work days. As an alternative, the Chamber of Commerce and Consumers Power Company (Michigan) suggested that the ADA's definition of ''disability'' could be used—a mental or physical impairment that substantially limits a major life activity. EEOC, which enforces the ADA, has advised that ADA ''disability'' and FMLA ''serious health condition'' are different, and that they should be analyzed separately.

Massmutual noted that while the one incentive in FMLA to limit employee abuse of FMLA leave was the stipulation that leave is unpaid, some companies (like Massmutual) provide fully paid sick leave for short-term absences. Thus, for companies with similar programs, there is no incentive for employees not to abuse sick leave because they would always be paid and could not be disciplined for the abuse due to FMLA's employment protections. Massmutual recommended that the definition of serious health condition be limited to a period of incapacity requiring an absence of at least five *working* days *or* to those days when an employee is scheduled for actual treatment and/or recovery from a treatment.

The Burroughs Wellcome Company observed that the definition does not refer at all to the types of health conditions involved, as does the legislative history, but instead focuses only on what the committee reports call the ''general test'' of incapacity for more than a few days and continuing medical treatment or supervision. Thus, the understanding of the test that Congress provided by listing examples of conditions that meet the test is lost. The Equal Employment Advisory Council recommended that the regulations include as serious health conditions all the conditions enumerated in the legislative history and, for those not enumerated, apply the general test. Federal Express similarly argued that a fixed number of consecutive absences and visits to a health care provider do not accurately reflect Congressional intent, as colds and flu could be included as ''serious health conditions.'' Federal Express recommended the definition focus on the seriousness of the illness rather than on an arbitrary time period, and that the health conditions listed in the legislative history be used in conjunction with the general test in the legislative history for determining whether an illness constitutes a serious health condition. Chicagoland Chamber of Commerce presented similar views, arguing that it is contrary to obvious legislative intent (and grossly over-inclusive) for the regulation to focus on the extent to which medical consultation is sought rather than on the degree of incapacitation.

Several employers and law firms contended in their comments that the definition was too broad and inconsistent with the purpose of the Act, in that a common cold (or any particular illness) which incapacitates an employee for more than three days and involves two visits to a health care provider could be considered within the definition of ''serious health condition.'' Giant Food Inc., Kennedy Memorial Hospitals, and LaMotte Company recommended clarifications to exclude from the definition minor, short-term, remedial or self-limiting conditions, and normal childhood or adult diseases (*e.g.*, colds, flu, ear infections, strep throat, bronchitis, upper respiratory infections, sinusitis, rhinitis, allergies, muscle strain, measles, even broken bones). Southwestern Bell Corporation likewise requested that the regulations distinguish routine illness (measles, chicken pox, common ear infections) from serious health conditions by providing a sample list of health conditions which are not considered serious unless complications arise. Fisher and Phillips stated that pre-delivery maternity leave should not be available where the pregnancy does not render the employee unable to perform the functions of the job. Nevada Power Company recommended excluding: Routine preventive physical examinations; illnesses and injuries which require less than six visits to a health care provider; conditions relating to transvestism, transsexualism, pedophilia, exhibitionism, voyeurism, gender disorders, or other sexual behavior disorders, kleptomania, pyromania or substance abuse disorders resulting from illegal use of drugs; other conditions which are neither life-threatening nor prolonged.

A number of commenters (City of Alexandria (Virginia), Fairfax Area Commission on Aging, Federally Employed Women, Northern Virginia Aging Network, the Brooklyn and Green Mountain Chapters of the Older Women's League, and Sisters of Charity of Nazareth) stated that the definition was too restrictive and recommended that it be expanded to specifically include chronic illnesses and long-term conditions which may not require inpatient care or treatment by a health care provider. The University of Vermont suggested that illnesses requiring respite care also be included. The LaMotte Company asked whether it would matter if an absence for a chronic illness (such as asthma) occurs infrequently—*e.g.*, would the absences have to be consecutive days or could they be one day this week and one the next, or one every month?

Blue Cross and Blue Shield of Texas, Inc., posed the issue as a quandary faced by employees and employers over the lack of definitive guidelines as follows: Is there a liability in covering less serious illnesses (such as chicken pox or a broken leg) as FMLA leave? If the employer does count time toward the 12-week entitlement, can the decision be challenged if, later in the year, a more severe condition arises and the employee has less than sufficient entitlement remaining?

Five commenters (Older Women's League, Women's Legal Defense Fund, Consortium for Citizens with Disabilities, Epilepsy Foundation of America, and United Cerebral Palsy Associations) took issue with the provisions in the definition which characterized ''continuing treatment'' for a chronic or long-term condition that is ''incurable.'' These commenters contended that curability is not a proper test for either a serious health condition or for continuing treatment, is ambiguous and subject to change over time, and should be deleted, noting that many incurable disabilities require continuing treatment that has nothing to do with curing the condition. Some pointed out that conditions such as epilepsy, traumatic brain injury, and cerebral palsy are typically conditions which are not ''curable'' in the generally accepted sense, but are conditions for which training and therapy can help restore, maintain or develop function or prevent deterioration, and noted that people with disabilities have struggled for a generation or more to overcome the image that disabilities are, or should be viewed as, curable or incurable. United Cerebral Palsy Associations noted that cerebral palsy is a term used to describe a group of chronic conditions affecting body movement and muscle coordination that are neither progressive nor communicable; that it is not a disease and should never be referred to as such, although training and therapy and assistive technology may help to restore, maintain or increase function.

Several commenters raised additional concerns on various aspects of the ''continuing treatment'' definition. The

Equal Rights Advocates suggested that continuing treatment include situations where a serious health condition exists that, if left unattended, would result in a hospital stay of more than three days.

Burroughs Wellcome stated that because the committee reports make it clear that ''continuing treatment'' involves absences from work, the regulation misses the mark by including one visit to a physician plus medication. Sommer and Barnard was concerned that the discussion on continuing treatment lacked clarity due to the lack of a clearly defined time frame for multiple treatments; further, that a typical employer could not determine from the information in the medical certification whether a condition is ''so serious that, if not treated, it would likely result in a period of incapacity of more than three calendar days.'' This application does not call for a medical judgment and the ''likely'' standard cannot possibly be administered. Sommer and Barnard also stated the regulations lack a meaningful definition of what constitutes a regimen of continuing treatment—would it include bed rest, home exercise, or instructions to use a non-prescription drug or medication? Sesco Management Consultants suggested the definition invalidly broadens the concept of continuing treatment by allowing ''following courses of medication and therapy'' to qualify, which could thus include taking aspirin for a few days while staying home, getting bed rest and stretching limbs, drinking liquids, *etc.*, which, this commenter contends, the Congress did not remotely suggest would qualify under FMLA.

Chicagoland Chamber of Commerce also considered the ''continuing supervision'' concept too vague, questioning whether ''supervision'' required the individual to actually be examined by the health care provider or to report in on some regular basis, or whether instructions to report in if the condition changes were sufficient. It considered treatment a definitive concept which could be proven, whereas ''supervision'' could not which would invite abuse and litigation.

The Food Marketing Institute commented that the Act defines a serious health condition to require continuing treatment by a health care provider, which necessarily means at least two visits to the health care provider. Conditions which result in self-treatment (*e.g.*, taking medication) ''under the supervision of'' a doctor are typically not serious health conditions as contemplated by the FMLA, according to this commenter. Similarly, the Society for Human Resource Management recommended that ''continuing treatment'' be redefined so that taking medications does not count the same as an office visit.

The Ohio Public Employer Labor Relations Association noted that while stress may contribute to illness in some persons, it is not an illness or a medical condition. The commenter recommended that treatment for stress without a commonly accepted and recognized medical diagnosis should not be included in the definition of a serious health condition.

Ten commenters raised various concerns regarding the availability of FMLA leave for treatment for substance abuse. The Epilepsy Foundation of America stated that substance abuse programs and mental health services must be included in the definition of serious health condition. William M. Mercer, Inc., suggested that the preamble discussion from the Interim Final Rule on treatment for substance abuse should be set forth in the rule itself. Consolidated Edison Company of New York, Inc. commented that employees should be allowed FMLA leave for substance abuse treatment only if they are not current users of illegal drugs, consistent with the approach followed under the ADA's protections. Consumers Power Company (Michigan) also recommended excluding absences for an employee's illegal use of drugs, and limiting FMLA leaves to inpatient substance abuse treatment programs with durations of no less than 14, or preferably, 28 days. Nationsbank Corporation (Troutman Sanders) suggested the regulations specifically state: (1) FMLA does not prohibit discipline for an employee's drug use in violation of the employer's policy; (2) an employee may not use FMLA to avoid potential discipline or drug testing; and (3) an employee returning from FMLA leave for substance abuse may be drug tested as a condition of return to work and following return to work, pursuant to an employer's post-treatment drug policy. Nevada Power Company suggested that an employer should not have to offer more than one leave of absence for drug or alcohol rehabilitation; and that employers which expend funds to reform substance abusers should be allowed to terminate employees if they begin to abuse drugs or alcohol again. Edison Electric Institute also suggested employers should only have to provide professional rehabilitative service and support to drug abusers one time.

The American Trucking Association, in contrast, advocated eliminating substance abuse from the definition of serious health condition, because protection of substance abusers jeopardizes efforts by the trucking industry and the U.S. Department of Transportation to eradicate substance abusers from the nation's highways. Federal Highway Administration regulations require trucking companies to conduct substance abuse testing, but do not permit a motor carrier to test a driver who voluntarily admits to abuse because such an admission, without more, fails to trigger the duty to test under any of the five categories, in essence enabling the employee to ''beat the system'' by triggering FMLA rights before a drug test could be conducted. It was unclear to the Association under FMLA whether such an admission would preclude a motor carrier's ability to test a driver scheduled for a random drug test. The Association recommended changing the regulations to either totally exclude substance abuse from the definition of serious health condition, or exclude those persons who are subject to FHWA drug testing requirements from FMLA protections insofar as those protections include treatment for substance abuse. This commenter would also support an exclusion limited to those persons in the transportation industry subject to federal drug testing requirements, and also suggested the regulations make clear that persons currently engaged in illegal use of drugs have no FMLA protections, consistent with the provisions of the ADA.

The Chamber of Commerce of the USA recommended clarifications to provide that current illegal use of drugs during treatment for illegal drug use, or resumption of the illegal use of drugs following completion of treatment, removes such treatment from the category of ''serious health condition'' under FMLA, and that an employee who fails a drug test would be subject to the employer's normal disciplinary procedures and would not be protected by FMLA.

Louisiana Health Care Alliance (Phelps Dunbar) suggested that clarification be provided to ensure that employers have the continued right to enforce legitimate policies for drug- and alcohol-free workplaces, by explicitly stating in the regulations that nothing in FMLA prohibits an employer from terminating or otherwise disciplining an employee pursuant to a legitimate drug testing program.

The Department has carefully reviewed the comments and re-examined the legislative history and the definition of ''serious health condition'' in an attempt to assure that it is consistent with Congressional intent, and that FMLA leave is available in

those situations where it is really needed. As a result of this review, the regulation has been significantly re-crafted, as discussed below.

As summarized above, comments were submitted opposing any duration limit, and equally strong comments suggested the standard was much too short. Upon review, the Department has concluded that the ''more than three days'' test continues to be appropriate. The legislative history specifically provides that conditions lasting only a few days were not intended to be included as serious health conditions, because such conditions are normally covered by employers' sick leave plans. The Department has also concluded that it is not appropriate to change the standard to working days rather than calendar days because the severity of the illness is better captured by its duration rather than the length of time necessary to be absent from work. Furthermore, a working days standard would be difficult to apply to serious health conditions of family members or to part-time workers. (It is noted that throughout the regulations, where a number of days is prescribed, calendar days is intended unless the regulation explicitly states business days.) The regulation has been revised, however, to make it clear that the absence must be a period of incapacity of more than three consecutive calendar days. ''Incapacity,'' for purposes of this definition, means inability to work, attend school or perform other regular daily activities due to the serious health condition, treatment therefor, or recovery therefrom. Any subsequent treatment or incapacity relating to the same condition would also be included.

The regulation also retains the concept that continuing treatment includes either two visits to a health care provider (or to a provider of health care services on referral of a health care provider) or one visit followed by a regimen of continuing treatment under supervision of the health care provider. Regimen of continuing treatment is clarified in paragraph (b) of this section to make it clear that the taking of over-the-counter medications, bed-rest, drinking fluids, exercises, and other similar activities that can be initiated without a visit to a health care provider is not, by itself, sufficient to constitute a regimen of continuing treatment for purposes of FMLA leave. Prescription drugs or therapy requiring special equipment, for example, would be included. It is envisioned that a patient would be under continuing supervision in this context, for example, where the patient is advised to call if the condition is not improved.

The Department concurs with the comments that suggested that special recognition should be given to chronic conditions. The Department recognizes that certain conditions, such as asthma and diabetes, continue over an extended period of time (*i.e.*, from several months to several years), often without affecting day-to-day ability to work or perform other activities but may cause episodic periods of incapacity of less than three days. Although persons with such underlying conditions generally visit a health care provider periodically, when subject to a flare-up or other incapacitating episode, staying home and self-treatment are often more effective than visiting the health care provider (*e.g.*, the asthma-sufferer who is advised to stay home and inside due to the pollen count being too high). The definition has, therefore, been revised to include such conditions as serious health conditions, even if the individual episodes of incapacity are not of more than three days duration. Pregnancy is similar to a chronic condition in that the patient is periodically visiting a health care provider for prenatal care, but may be subject to episodes of severe morning sickness, for example, which may not require an absence from work of more than three days. It is clear from FMLA's legislative history that pregnancy was intended to be treated as a serious health condition entitling an individual to leave under the Act, and the definition therefore includes any period of incapacity due to pregnancy, or for prenatal care.

The Department has also included a definition to deal with serious health conditions which are not ordinarily incapacitating (at least at the current state of the patient's condition), but for which treatments are being given because the condition would likely result in a period of incapacity of more than three consecutive calendar days in the absence of medical intervention or treatment. The regulation requires multiple treatments, and includes as examples patients receiving chemotherapy or radiation for cancer, dialysis for kidney disease, or physical therapy for severe arthritis. Multiple treatments for restorative surgery after an accident or other injury is also specifically included. The previous requirement that the condition be chronic or long-term has been deleted because cancer treatments, for example, might not meet that test if immediate intervention occurs.

The portion of the definition dealing with long-term, chronic conditions such as Alzheimer's or a severe stroke has been modified to delete the reference to the condition being incurable, and to require instead that the condition involve a period of incapacity which is permanent or long-term and for which treatment may not be effective. Therefore, in this situation, as under the interim final rule, it is only necessary that the patient be under the supervision of a health care provider, rather than receiving active treatment.

The Department did not consider it appropriate to include in the regulation the ''laundry list'' of serious health conditions listed in the legislative history because their inclusion may lead employers to recognize only conditions on the list or to second-guess whether a condition is equally ''serious'', rather than apply the regulatory standard. However, the regulation does provide, as examples, that, unless complications arise, the common cold, the flu, earaches, upset stomach, minor ulcers, headaches other than migraine, routine dental or orthodontia problems, and periodontal disease are not ordinarily serious health conditions. In addition, the regulation specifically states that routine physicals, eye examinations and dental examinations are not considered treatment, although examinations to determine if a serious health condition exists and evaluations of the condition are considered treatment.

The regulation has also been revised in paragraph (c) to delete the reference to ''voluntary'' treatments for which treatment is not medically necessary, and restrict the exclusion to cosmetic treatments (unless inpatient care is required or complications develop). The term ''voluntary'' was considered inappropriate because all treatments and surgery are voluntary. Furthermore, the Department did not wish to encourage employers to second-guess a health care provider's judgment that a treatment is advisable (*e.g.*, orthoscopic knee surgery on an out-patient basis) by questioning whether it is ''necessary''.

The regulation continues to recognize that substance abuse may be a serious health condition if the criteria of the regulation are met. However, the regulation is revised to make it clear that an absence because of the employee's use of the substance, rather than for treatment, is not protected. See also § 825.112(g) of the regulations, which has been revised to make it clear that an employer may take disciplinary action against an employee pursuant to a uniformly applied policy regarding substance abuse, provided the action is not being taken because the employee has exercised his or her right to take FMLA leave.

In response to the question by Blue Cross and Blue Shield of Texas regarding liability in covering less

serious illnesses, the regulatory procedures in § 825.208 prescribe the method for an employer to designate FMLA leave. Under this procedure, an employee has an opportunity to counter an employer's designation of leave and resolve the dispute. *See* § 825.208(b).

As suggested, the reference in the interim final rule to stress as a possible serious health condition has been revised to mental illness resulting from stress.

Unable To Perform the Functions of the Position (§ 825.115)

An eligible employee may take FMLA leave due to a ''serious health condition'' that makes the employee ''unable to perform the functions'' of the employee's position. Section 825.115 of the Interim Final Rule states that an employee is ''unable to perform the functions of the position'' where the health care provider has found the employee either unable to work at all, or unable to perform any of the essential functions of the position within the meaning of the ADA and its implementing regulations (29 CFR Part 1630). For employers that request employees to furnish medical certification from the employee's health care provider to support the leave request, the regulations provide the employer the option of furnishing a statement (list) of the employee's essential functions for the health care provider to review when certifying to the employee's condition.

The Women's Legal Defense Fund, California Department of Fair Employment and Housing, and Consumers Power Company, Michigan commented that this section was unclear as to whether an employee must be found unable to perform each and every essential function (*i.e.*, all), or only any single one, or some of several of the essential functions. Several commenters (Alabama Power Company (Balch & Bingham); Chamber of Commerce of the USA; Credit Union National Association, Inc.; National Restaurant Association; Society for Human Resource Management; William M. Mercer, Inc.) either questioned the effect of ''reasonable accommodations'' and ''job restructuring'' or modified ''light duty assignments'' on FMLA leave requests, or suggested that the FMLA regulations be interpreted to mean ''unable to perform any of the essential functions with or without reasonable accommodation within the meaning of the ADA.'' Thus, under this latter view, FMLA leave could be denied to an employee with a serious health condition who, although unable to perform the essential job functions, would be able, despite the condition, to perform those functions if offered ''reasonable accommodation.'' Some commenters noted the utility of creating ''light duty'' assignments for employees who suffer on-the-job injuries, and the impact on State workers' compensation benefits which can be suspended if an employee refuses to accept a medically-approved ''light duty'' assignment. The Consortium for Citizens with Disabilities, Epilepsy Foundation of America, and United Cerebral Palsy Associations noted a difference in the language in this section of the regulations and that of § 825.306(b) (discussing medical certifications) and suggested conforming changes so that both sections would be interpreted to mean ''any one (or more) of the essential functions'' (not all of the essential functions). The EEOC noted once again that the DOL rule cited to the entire body of the ADA regulations in the cross-reference and suggested refining the cite to the specific ADA rule that defines ''essential functions'' (29 CFR 1630.2(n)).

This section was intended to reflect that an employee would be considered ''unable to perform the functions of the position'' within the meaning of the regulations if the employee could not perform any *one* (or more) of the essential functions of the job held by the employee at the time the need for FMLA leave arose, and the final rule is so clarified (in §§ 825.115 and 825.306). EEOC's recommendation to cite to the specific ADA rule defining ''essential functions'' has also been adopted. The cite has been so revised, to make it clear that reasonable accommodation is irrelevant for purposes of FMLA.

The relationship between FMLA's leave provisions and other laws like the ADA and State workers' compensation laws is addressed under Title IV of the FMLA and in Subpart G of the FMLA regulations (§§ 825.700–825.702). As will be discussed further in connection with §§ 825.701 and 825.702 below, FMLA entitles an employee to take up to 12 weeks of *job-protected* leave, from the position of employment of the employee when the employee gives notice or when leave commences (whichever is earlier), for a serious health condition that makes the employee unable to perform any one of the essential functions of the employee's position (the position held by the employee when the notice was given or the leave commenced). FMLA also entitles such an employee to be restored to that same position of employment (the one held by the employee when notice was given or the leave commenced), or to an equivalent position with equivalent employment benefits, pay, *and other terms and conditions of employment.* Under these statutory terms, if an employee qualifies under FMLA for job-protected leave, the employee may not be forced, before the employee's FMLA job-protected leave entitlement has expired, to return to work in a ''light duty'' (*i.e.*, an unequal, modified, or restructured) position, instead of continuing FMLA leave until the entitlement has been exhausted. To do so would violate an employee's job-protected rights to be restored to the *same or an equivalent* position. Furthermore, the circumstances in which an employer is permitted to place an employee in an alternative position are explicitly addressed in the Act (§ 102(b)(2)).

Regarding the comment that worker's compensation benefits may be suspended if an employee refuses a light duty assignment, we do not interpret the FMLA as prohibiting that result under applicable State workers' compensation statutes. In our view, where an employee is injured on the job and the injury also results in a serious health condition that makes the employee unable to perform any one of the essential functions of the employee's position within the meaning of FMLA, the employee effectively qualifies for *both* workers' compensation benefits and job-protected leave under the FMLA. This would mean that, in addition to the employee receiving payments from the workers' compensation fund for replacement of lost wages, the employer would be obligated to maintain (at least until the employee's FMLA leave entitlement is exhausted) any of the employee's pre-existing health benefits coverage under the same terms and conditions as if the employee had continued to work. If, as part of the workers' compensation claim process, the employee is offered a medically-approved ''light duty'' assignment, the employee may decline the assignment offer and instead choose to begin or continue to exercise FMLA rights and remain on leave for the remaining portion of the employee's FMLA leave entitlement. As discussed in § 825.220(d), if the employee freely accepts the ''light duty'' assignment offer in lieu of FMLA leave or returns to work before exhausting his or her FMLA leave entitlement, the employee would retain his or her right to the original or an equivalent position until 12 weeks have passed, including all FMLA leave taken that year. At the conclusion of the 12-week period, if the employee is not able to perform the essential functions of the original

position, the employee's right to restoration ceases. The relationship between State workers' compensation laws and FMLA will be discussed in further detail in connection with § 825.702.

It should be noted that FMLA does not modify or affect any law prohibiting discrimination on the basis of disability, such as the ADA. Thus, if a ''qualified individual with a disability'' within the meaning of the ADA is also an ''eligible employee'' entitled to take FMLA leave, an employer has multiple compliance obligations under both the ADA and the FMLA. When one of these laws offers a superior right to an employee on a particular issue, the employer must provide that superior right to the employee. These issues will be discussed in further detail in connection with § 825.702.

This section is also revised to make it clear, as stated in the legislative history and in the preamble to the Interim Final Rule, an employee who is absent to receive medical treatment for a serious health condition is unable to perform the essential functions of the employee's job while absent for treatment.

Needed To Care for a Family Member (§ 825.116)

An eligible employee may take FMLA leave ''in order to care for'' an immediate family member (spouse, son, daughter, or parent) with a serious health condition. This section, in discussing what was meant by ''needed to care for'' a family member, provided that both physical and psychological care or comfort were contemplated under this provision of FMLA. Giant Food, Inc. recommended that a distinction be made between physical and psychological care and supervisory care, suggesting also that reasonable efforts should be made by employees to develop alternate day care plans in the event of a childhood illness to lessen the impact that excessive absenteeism can have on an employer's operations. The Ohio Public Employer Labor Relations Association objected to allowing FMLA leave solely to provide psychological comfort for a family member rather than actual physical assistance and care, and suggested that employers should have discretion to consider whether other care is being provided to the family member through health-care services as well as other family members. The Women's Legal Defense Fund, Consortium for Citizens with Disabilities, Epilepsy Foundation of America, National Community Mental Healthcare Council, and United Cerebral Palsy Associations objected to the reference to individuals ''receiving inpatient care'' in paragraph (a), because many individuals are in other situations, such as in the home, which require this type of care and assistance from family members. Several of these commenters also objected to use of the phrase ''seriously-ill'' as too limiting and recommended replacing it with the statutory term ''serious health condition'' for consistency with other sections of the regulations. Some of these commenters, in addition to the Food and Allied Service Trades, also recommended that ''spouse'' be added to the list of family members in this section.

The final rule has been revised to add ''spouse'' to the last sentence of paragraph (a), to delete ''inpatient care,'' and to replace ''seriously-ill'' with ''serious health condition.'' No further changes have been made in response to the remaining comments. The legislative history clearly reflects the intent of the Congress that providing psychological care and comfort to family members with serious health conditions would be a legitimate use of FMLA's leave entitlement provisions. Because FMLA grants to eligible employees the absolute right to take FMLA leave for qualifying reasons under the law, employers have no discretion in this area and cannot deny the legitimate use of FMLA leave for such purposes without violating the prohibited acts section of the statute. See § 105 of FMLA.

Medical Need for Intermittent/Reduced Schedule Leave (§ 825.117)

FMLA permits eligible employees to take leave ''intermittently or on a reduced leave schedule'' under certain conditions. Intermittent leave may be taken for the birth of a child (and to care for such child) and for the placement of a child for adoption or foster care if the employer and employee agree to such a schedule. Leave for a serious health condition (either the employee's or family member's) may be taken intermittently or on a reduced leave schedule when ''medically necessary'' (§ 102(b)(1) of FMLA). An employer may request that an employee support an intermittent leave request for a serious health condition with certification from the health care provider of the employee or family member of the medical necessity of the intermittent leave schedule and its expected duration. Employees must make a reasonable effort to schedule their intermittent leave that is foreseeable based on planned medical treatments so as not to unduly disrupt the employer's operations (subject to the approval of the health care provider), and employers may assign employees temporarily to alternative positions with equivalent pay and benefits that better accommodate such recurring periods of intermittent leave. (See also § 825.203.)

The Employee Assistance Professional Association, Inc. commented that no rationale was provided for why intermittent leave or reduced leave schedules are not available to an employee seeking to take leave to care for a family member. Intermittent leave to care for an immediate family member is allowed, as discussed in § 825.116.

The Women's Legal Defense Fund recommended that the regulations state explicitly that the determination of medical necessity for intermittent or reduced leave schedules is made only by the health care provider of the employee, in consultation with the employee. The Department's medical certification form, as discussed in § 825.306, is the vehicle for obtaining certification of the medical necessity of intermittent leave or leave on a reduced leave schedule, and such determinations are made exclusively by the health care provider of the employee or employee's family member (subject to an employer's right to request a second opinion at its own expense if it has reason to doubt the validity of the certification provided).

HCMF (long term care facilities) questioned what reasonable efforts are required by employees to consult with the employer and attempt to schedule intermittent leave so as not to unduly disrupt the employer's operations. Cincinnati Gas & Electric Company suggested that it would be reasonable for an employer to request that an employee attempt to schedule planned medical treatment outside normal work hours. The Equal Employment Advisory Council recommended the rules state that an employer may deny intermittent or reduced leave schedules when the reason for the leave can be accommodated during non-work hours, because the need for leave in such circumstances is not ''medically necessary.'' Gray, Harris & Robinson asked what would constitute an undue disruption, if it were analogous to ADA's ''undue hardship'' standard, and to what extent could an employer deny the leave. The Chamber of Commerce of the USA also recommended clarifications in the rules of the impact of an employee's failure to satisfy the obligation to avoid disruptions to the employer's operations.

As discussed in §§ 825.302 (e) and (f), the employee and employer should attempt to work out a schedule which meets the employee's FMLA leave needs without unduly disrupting the employer's operations. The ultimate

resolution of the leave schedule, however, always remains subject to the approval of the health care provider and the schedule established for the planned medical treatments. It should be noted that under this section, the health care provider either already has, or will, establish the medical necessity for the intermittent leave schedule; it is a prerequisite for the leave. Thus, denial of the leave would be out of the question. Even delay of the leave would be inappropriate unless the health care provider agreed to reschedule the medical treatments. What would be a ''reasonable effort'' by the employee and an ''undue disruption'' of the employer's operations are fact-specific in each case. Requesting that an employee attempt to schedule planned medical treatments outside the normal work hours when scheduling them during work hours would not unduly disrupt the employer's operations would not be ''reasonable'' or consistent with FMLA's requirements.

Definition of ''Health Care Provider'' (§ 825.118)

FMLA entitles eligible employees to take leave for a serious health condition (of either the employee or an immediate family member). ''Serious health condition'' is defined to include an injury, illness, impairment, or physical or mental condition involving either inpatient care or ''continuing treatment *by a health care provider*.'' In addition, FMLA's medical certification provisions allow an employer to request that leave for a serious health condition ''* * * be supported by a certification issued by the *health care provider* * * *'' of the employee or family member. Section 101(6) of the Act defines ''health care provider'' as a doctor of medicine or osteopathy authorized in the State to practice medicine or surgery (as appropriate) or ''any other person determined by the Secretary [of Labor] to be capable of providing health care services.''

After reviewing definitions under several programs, including rules of the U.S. Office of Personnel Management and Medicare, DOL developed FMLA's regulatory definition of ''health care provider'' by beginning with the definition of ''physician'' under the Federal Employees' Compensation Act (5 U.S.C. 8101(2)), which also includes podiatrists, dentists, clinical psychologists, optometrists, and chiropractors (limited to treatment consisting of manual manipulation of the spine to correct a subluxation as demonstrated by X-ray to exist) authorized to practice in the State and performing within the scope of their practice as defined under State law, and by adding nurse practitioners and nurse-midwives (who provide diagnosis and treatment of certain conditions, especially at health maintenance organizations and in rural areas where other health care providers may not be available) if performing within the scope of their practice as allowed by State law. Finally, the definition included Christian Science Practitioners to reflect the Congressional intent that such practitioners be included (as expressed in colloquies on the floors of both the House and Senate, and as reflected in the Committee report accompanying Title II of FMLA applicable to Federal civil service employees).

Fifty-seven commenters submitted views on the regulatory definition of ''health care provider.'' Most advocacy groups and various trade and professional associations viewed the definition as too restrictive and suggested that it be expanded to include a broad range of additional providers of health care and related services.

Federally Employed Women and the Women's Legal Defense Fund noted that OPM's definition for Federal civil service employees under Title II of FMLA includes those providers recognized by the Federal Employee's Health Benefits Program, and suggested a similar approach be used by DOL for Title I. They contended that including any providers covered by the employers health insurance plan avoids confusion as to whether the services would be reimbursed and ensures ease of administration.

Alabama Power Company (Balch & Bingham) considered the definition as written too broad and suggested DOL follow the lead of the States with FMLA-type laws, confining the definition to doctors and osteopaths. The ERISA Industry Committee felt that employers should not be required to recognize service providers not recognized by their health plans. Burroughs Wellcome Company suggested that Christian Science Practitioners not be included.

The American Association for Marriage and Family Therapy, 14 State Associations for Marriage and Family Therapy, Teton Youth & Family Services, and the Women's Legal Defense Fund suggested that marriage and family therapists be included in the definition. Fourteen organizations (American Board of Examiners in Clinical Social Work; California Society for Clinical Social Work; Catholic Charities, Inc.; Council on Social Work Education; the Maryland, Mississippi, New Hampshire, New York State, Ohio, Rhode Island, Texas and Utah Chapters of the National Association of Social Workers; Women's Legal Defense Fund; and 9 to 5, National Association of Working Women), the Personnel Department of the City of Newport News, and five Members of Congress recommended that ''clinical social workers'' be added to the definition of ''health care providers.'' In addition, 436 cards/letters (generally uniform in style and content) were received from practicing social workers also urging that ''clinical social workers'' be added.

The Consortium for Citizens with Disabilities, Epilepsy Foundation of America, and United Cerebral Palsy Associations suggested that the regulations include providers of specialized health-related services for the disabled, health care providers licensed by States or accredited by national certification organizations, a non-exclusive list of types of providers (whether or not licensed or accredited), and a procedure for applying to DOL to add ''emerging'' health care provider services. The Service Employees International Union also supported flexibility in the regulations to include other types of providers of services as new roles evolve with changes in the health care system.

The American Academy of Physician Assistants, Community Legal Services, Inc., Equal Rights Advocates, Hospital Council of Western Pennsylvania, 9 to 5, National Association of Working Women, and Older Women's League recommended that physician assistants be included. The National Acupuncture and Oriental Medicine Alliance recommended including Acupuncturists and Oriental Medicine Practitioners. Employee Assistance Professional Association, Inc. recommended that Certified Employee Assistance Professionals be recognized as ''providers'' capable of making determinations of whether an employee is able to work or unable to return to work.

The American Chiropractic Association and William M. Mercer, Inc. objected to the parenthetical phrase concerning chiropractors that limited treatment to manual manipulation of the spine to correct a subluxation demonstrated by X-ray to exist. The American Psychological Association recommended replacing ''clinical psychologist'' with ''doctorally trained psychologist whose scope of competence includes clinical activities.''

The American Psychiatric Association suggested that a distinction should be maintained between doctors of medicine or osteopathy and non-

physician health care professionals, and that certification for intermittent or reduced leave schedules should be accepted only from doctors of medicine or osteopathy, not non-physician health care providers. The Consortium for Citizens with Disabilities, on the other hand, suggested that the medical certification form be revised so that it does not appear that only a medical doctor or osteopath can sign off on the form.

California Rural Legal Assistance, Inc., Equal Rights Advocates, and William M. Mercer, Inc. recommended that foreign-certified or foreign-licensed health care providers should be recognized under FMLA, to account for the fact that many workers' parents, spouses or children do not reside in the U.S. or that such family members may become ill while abroad. (California Rural Legal Assistance, Inc. stated that many U.S. residents rely on Mexican doctors for health care.)

The law firm of Fisher & Phillips recommended that DOL delay exercising its authority to designate health care providers until there is an opportunity to determine the impact on the President's health care proposal.

After giving careful consideration to the numerous suggestions for changes in the definition of ''health care provider,'' we have revised the final rule in the following respects. The definition will be expanded to include any health care provider that is recognized by the employer or accepted by the group health plan (or equivalent program) of the employer. To the extent that the employers or the employers' group health plans recognize any such individuals for certification of the existence of a health condition to substantiate a claim for health care and related services that are provided, they would be included in the revised definition of ''health care provider'' for purposes of FMLA. Clinical social workers will also be included because our review reveals that they are ordinarily authorized to diagnose and treat without supervision under State law. Physician's assistants are not included as health care providers under the regulations because they are ordinarily only permitted to practice under a doctor's supervision. An employee, however, may receive treatment by a physician's assistant or other health care professional under the supervision of a doctor or other health care provider without first seeing the health care provider and obtaining a referral. In addition, any services recognized by the plan which are furnished as a result of a referral while under the continuing supervision of a health care provider would qualify as medical treatment for purposes of FMLA leave (see § 825.114(c)(2)(i)(A)).

II. Subpart B, §§ 825.200–825.220

Amount of Leave (§ 825.200)

Employers must choose from among four options a single uniform method for calculating the 12-month period for determining ''12 workweeks of leave during any 12-month period.'' The choice of options was intended to give maximum flexibility for ease in administering FMLA in conjunction with other ongoing employer leave plans, given that some employers establish a ''leave year'' and because of State laws that may require a particular result.

The California Department of Fair Employment and Housing recommended this section include cautionary advice to employers that the availability of options may be limited by State law (the California Family Rights Act starts the 12-month period with the date the employee first uses qualifying leave). William M. Mercer, Inc. questioned whether State family leave laws would control the employer's administration of FMLA, and also whether leave accrues under the backward rolling method on a daily basis. The State of New York's Department of Civil Service and the State of Nevada's Department of Personnel recommended that each agency or department within a State government be allowed to select a separate (*i.e.*, different) 12-month period.

The State of South Carolina's Division of Human Resource Management, the State of South Dakota's Bureau of Personnel, and the Edison Electric Institute recommended provisions be added to limit the amount of FMLA leave available to an employee for the birth or adoption of a child to a single 12-week period per event (*e.g.*, under the calendar year method, an employee who adopts or gives birth to a child late in the year would not be entitled to take additional leave in the second calendar year period because of the adoption or birth of that child). Similarly, Cincinnati Gas and Electric Company recommended the final rules prohibit an employee from receiving 24 weeks of protected leave for a single FMLA-covered event (*e.g.*, where the initial 12-week absence ends at the same time the next annual 12-week allotment begins). (See also the discussion of similar comments received on the section that follows, § 825.201.)

The Women's Legal Defense Fund recommended that DOL explicitly define the method rather than allowing employer choices, to prevent manipulation, and suggested the period be calculated as the 12-month period following commencement of an employee's first FMLA leave (§ 825.200(b)(3)). If choices are allowed, they urge that the 12-month period rolling backward method (paragraph (b)(4)) be rejected because it curbs employee flexibility and is confusing to them. The American Federation of Teachers/National Education Association concurred with WLDF's comments. The AFL–CIO and Service Employees International Union submitted similar views. (SEIU also suggested clarifying that employers may not switch methods to deny employees leave, and that such action would violate FMLA's anti-interference provisions.) The United Paperworkers International Union suggested that the 12-month period be calculated by using each individual employee's anniversary date, as employees are not eligible until they have worked for at least 12 months, and this would prevent employers from manipulating the 12-month period to avoid FMLA obligations.

Fisher & Phillips suggested that the regulations refer to the 12-month ''rolling period'' as the default method for employers that have not designated a 12-month period.

The Society for Human Resource Management questioned whether the 12-week entitlement was for each separate reason specified under FMLA (12 weeks for childbirth, plus 12 weeks for a sick parent, plus 12 weeks for the employee's serious health condition, *etc.*, all in the same 12-month period), or for all reasons (total for all events in a 12-month period limited to 12 weeks). This commenter also questioned whether an employer must allow an employee to return to work early in the situation where the employee requested 12 weeks of leave and, three weeks into the leave, the employee asks to return to work.

Black, McCuskey, Sourers & Arbaugh stated that employees of employers who selected the calendar year should be entitled to only five weeks of FMLA leave for the period between August 5, 1993, and December 31, 1993. The Department cannot agree with this line of reasoning, which would suggest that employees of employers who select the calendar year would be entitled to less leave other employees. Nor do we believe that Congress intended that an employee be entitled to one week of leave for each remaining month of the year after eligibility is established.

The final rule has been clarified in response to several of the comments

received. The rule notes that an employer may be unable to choose one method from among the available regulatory options if a particular method is dictated by a State family leave law. In this regard, employers operating in multiple States with differing State family/medical leave provisions affecting the 12-month calculation must follow the method required by the State laws. Absent a conflict with State law, employers must select a single, uniform policy covering its entire workforce. Employers must inform employees of the applicable method for determining FMLA leave entitlement when informing employees of their FMLA rights. If an employer fails to designate one of the methods, employees will be allowed to calculate their leave entitlement under whichever method is most beneficial to them. The employer in that case would subsequently be able to designate a choice prospectively, but would have to follow the rule for employers wishing to change to another alternative (*i.e.*, give 60 days notice to all employees, and employees retain the full benefit of 12 weeks of leave under whichever method yields the greatest benefit to employees during the 60-day transition period).

When determining the amount of FMLA leave taken, a holiday occurring within a week of FMLA leave has no effect—the week is still counted as a week of FMLA leave. If however, the employer's activities temporarily cease for one or more weeks and employees generally are not expected to report for work (*e.g.*, a school that closes two weeks for the Christmas and New Year holiday or for the summer vacation; a plant that closes two weeks for repairs or retooling), the days on which the employer's activities have ceased do not count against an employee's FMLA leave entitlement.

The ''rolling backward'' method is a snapshot of the 12-month period that changes daily (*i.e.*, as each new day is added to the 12-month period, one day from 12-months ago is eliminated). While many comments were received opposing this method, it has been retained as one of the available options because it is the one method that most literally tracks the statutory language.

Once the 12-month period is determined, an employee's FMLA leave entitlement is limited to a total of *up to* 12 workweeks of leave in that 12-month period for any and all reasons that qualify for taking leave under FMLA. If an employer selects the calendar year as the 12-month period, there is no authority under the statutory language to limit an employee's entitlement to a ''per event'' concept. (This would be akin to saying that if an employee under the calendar year method suffered a heart attack in the month of December, that employee would no longer qualify, once the new year arrived, to take FMLA leave for that serious health condition. We ardently reject this strained interpretation.) The only limitation the Act places on an employee's taking FMLA leave in a subsequent 12-month period to care for a newborn or newly-adopted child is that the entitlement to leave for such purposes expires 12 months after the date of the birth or placement.

If an employee begins a requested 12-week leave of absence and, three weeks into the leave, asks to return to work earlier than originally planned, the employer is obligated to promptly restore the employee. An employee may only take FMLA leave for reasons that qualify under the Act, and may not be required to take more leave than is necessary to respond to the need for FMLA leave. If circumstances change and the employee no longer has a need for FMLA leave (which could include a parent's changed decision not to stay home with a newborn child as long as originally planned), the employee's FMLA leave is concluded and the employee has an absolute right under the law to be promptly restored to his or her original or an equivalent position of employment. This view does not mean that employees do not also have obligations to provide notice to the employer of such changing circumstances. If an employee's status changes and the employee is able to return to work earlier than anticipated, the employee should give the employer reasonable advance notice, generally at least two working days. This is addressed in § 825.309(c). An employer may also obtain such information through periodic status reports on the employee's intent to return to work.

Conclusion of Leave for Birth or Adoption (§ 825.201)

Under § 102(a)(2) of FMLA, an employee's entitlement to leave for a birth or placement of a son or daughter ''shall *expire* at the *end* of the 12-month period *beginning* on the date of such birth or placement'' (emphasis added). This section of the regulations repeated the statutory terms with the added qualifications that State law may require, or an employer may permit, a longer period; any such *FMLA* leave, however, must be *concluded* within this statutory 12-month period.

The Los Angeles County Metropolitan Transportation Authority recommended this section be revised to state clearly that leave for the birth of a child, or placement of a child with the employee for adoption or foster care, must be initiated and completed within 12 months after the birth or placement. Nationsbank Corporation (Troutman Sanders) stated that the termination date for an employee's entitlement to leave under this section should occur 12 months after the first FMLA leave is taken in connection with the event, rather than 12 months after the date of birth or placement, suggesting this approach would be more consistent with other regulatory provisions allowing such leave to begin before the actual date of birth or placement. (Otherwise, they suggest, the 12 weeks of leave could be spread over a period greater than the 12-month period provided by FMLA's requirements.)

The Employers Association of New Jersey questioned whether a provision under the New Jersey law that requires leave to *commence* (but it need not conclude) within one year of the date of birth would prevail over the FMLA.

The Women's Legal Defense Fund considered the language in this section of the regulations too restrictive, suggesting it removes scheduling flexibility for employees. WLDF suggested replacing ''concluded'' with ''begun'' (which, thus, would read like the New Jersey law cited above).

The Chamber of Commerce of the USA suggested modifications that would limit an employee's leave entitlement to a single 12-week period for the birth or placement of a child, to make it clear that an employee is not entitled to ''stack'' leave periods in connection with a single birth or placement. The Association of Washington Cities expressed similar views.

Our review of the statute and its legislative history in the context of the comments received has confirmed our initial views on this section. The statute clearly states that the entitlement to leave *expires* at the end of one year following the date of birth or placement of the child. Thus, the leave must be concluded (*i.e.*, completed) within the statutory entitlement period. There is no authority to provide by regulation that the leave need only begin within the statutory 12-month period. If a State provision (as is the case in New Jersey) allows for a longer or more generous period, the more generous State provision would prevail but such leave beyond what FMLA requires would not count as FMLA leave (see § 401(b) of FMLA, discussed below in connection with § 825.701 of the regulations). There is no authority to shorten the statutory 12-month period under the regulations where an employee begins leave for the

birth or placement prior to the actual birth of placement. Nor is there authority to limit an employee's entitlement to a ''per event'' standard.

Limitation for Spouses Employed by the Same Employer (§ 825.202)

Section 102(f) of FMLA specifically limits the total aggregate number of workweeks of leave to which an ''eligible'' husband and wife are both entitled if they work for the same employer to 12 workweeks of leave (combined between the two spouses) if the leave is taken for: (1) the birth of a child; (2) the placement of a child for adoption or foster care; or (3) to care for a sick parent. The regulations specified which FMLA-covered purposes for taking leave were subject to the special limitation, and gave examples of how the limitation would apply when leave taken during the 12-month period is for both a reason subject to the limitation and one that is not (leave for an employee's own serious health condition, and ''family'' leave if it is for care of a spouse, son, or daughter, is not subject to the statutory limitation).

Twelve comments were received on this section. Many commenters misunderstood the relationship under the statute between leave taken for a reason subject to the combined limit of 12 weeks, and leave taken for reasons not within the limitation. Several commenters took issue with the reasoning for limiting leave entitlements for spouses employed by the same employer. Two individuals opposed the limitations as being discriminatory against spouses.

Martin, Pringle, Oliver, Wallace & Swartz and the Virginia Maryland Delaware Association of Electric Cooperatives both noted that the regulations provide no guidance in connection with siblings employed by the same employer. The Society for Human Resource Management noted that two employees living together but not legally married can each take 12 weeks for the birth or placement of a child, and recommended revising the regulations to provide that the 12-week-total limitation would also apply where both parents of a child work for the same employer. The Ohio Public Employer Labor Relations Association felt that employers should be able to limit the leave of spouses for the care of a seriously-ill child for the same reason spouses are limited for the birth or adoption of a child. George Washington University felt that care for a seriously-ill parent should entitle each spouse to 12 weeks of FMLA leave. Because FMLA does not cover care of a parent in-law, the Women Employed Institute felt that both the husband and wife should be entitled to 12 weeks of leave in order to care for their own parent, just as they are entitled to 12 weeks of leave for their own illness.

Fisher & Phillips noted that when a female employee takes leave for the birth of a child, the leave may have a dual purpose under FMLA. One purpose relates to the employee's own serious health condition for childbirth and recovery (§ 102(a)(1)(D) of FMLA). The other relates to the birth and care of a newborn child (§ 102(a)(1)(A) of FMLA). They recommended revising the rule to state that such ''dual purpose'' leave would always be treated as being subject to the limitation for purposes of the husband taking FMLA leave. Fisher & Phillips suggested further that the reference in the Act to ''parent'' must be an error, that the word ''child'' must have been intended (recommending such a revision be made through regulatory interpretation).

According to the legislative history, the limitation on leave taken by spouses who work for same employer is intended to eliminate any employer incentive to refuse to hire married couples. It is our view that the statutory provisions must be interpreted literally, and we do not agree that the legislative result is an error that should be altered by regulation. DOL lacks the authority to either add to, or subtract from, the circumstances that are subject to the statutory limitation of spouses who work for the same employer. The examples given in the regulation have been clarified in an effort to reduce the confusion that is apparent from the comments received on this section of the regulations. With respect to the comment by Fisher & Phillips on ''dual purpose'' leave, FMLA lacks any '' dual purpose'' concept. Further, the statutory limitation must be applied literally, and only to leave that is taken for a purpose that is expressly subject to the limitation. Clearly there is a period of disability following the birth of a child, as explicitly recognized under State pregnancy disability laws. Disability leave recognized under such State laws for the birth of a child would also be considered FMLA leave for a serious health condition. Such leave, for one's own serious health condition, is not subject to the limitation for spouses who work for the same employer. Nor does the limitation apply to unmarried parents or to siblings employed by the same employer. The regulations have been clarified in response to the comments received.

Intermittent and Reduced Leave Schedules (§ 825.203)

FMLA permits eligible employees to take leave ''intermittently or on a reduced leave schedule'' under certain conditions. Intermittent leave is not available for the birth or adoption of a child unless the employee and employer agree otherwise. Subject to compliance with FMLA's ''notice'' and medical certification provisions, and the right of an employer to transfer an employee temporarily to an alternative position with equivalent pay and benefits that better accommodates recurring periods of leave, leave for a serious health condition (either the employee's or family member's) may be taken intermittently or on a reduced leave schedule when medically necessary.

The Women's Legal Defense Fund and the Service Employees International Union commented that intermittent leave should be permitted to accomplish a placement for adoption or for foster care prior to the actual placement without requiring the agreement of the employer. Section 825.112(d) of the Interim Final Rule provides for the taking of FMLA leave for purposes of adoption or foster care prior to the actual placement in situations when the employee may be required to attend counselling sessions, appear in court, *etc.* Unlike the circumstances in § 825.112(c) which provide for an expectant mother to take leave prior to the birth of a child for prenatal care or for her own condition, both of which are specifically identified as being a serious health condition, placement for adoption or foster care is not so identified. To provide intermittent leave without the employer's agreement prior to the actual placement would be contrary to the language contained in § 102(b)(1) of the statute, ''In General—Leave under subparagraph (A) *(birth of a child)* or (B) *(placement for adoption of foster care)* of subsection (a)(1) shall not be taken by an employee intermittently or on a reduced leave schedule unless the employee and the employer of the employee agree otherwise.'' We are unable to make the suggested change in the Final Rule.

Fifteen commenters, including public employers, public utilities, educators, health care industry employers and manufacturers urged that the taking of intermittent leave in increments of one hour or less was too burdensome. Many recommended that leave taken intermittently should be limited to half-days (four hours) or full days as a minimum. The legislative history provides that only the time actually taken is charged against the employee's

entitlement (Senate Committee on Labor and Human Resources (S. 5), Report 103–3, January 27, 1993, pp. 27 & 29). Otherwise, the statute and the legislative history are silent regarding increments of time related to intermittent leave. In providing guidance on this issue in the Interim Final Rule, it seemed appropriate to relate the increments of leave to the employer's own recordkeeping system in accounting for other forms of leave or absences. Section 825.203(d) tracks that decision and provides that the employer's established recordkeeping system controls with regard to increments of FMLA leave of less than one hour. (The employer may not require leave to be taken in increments of more than one hour.) The guidance in the Interim Final Rule continues to be appropriate; otherwise employees could be required to take leave in amounts greater than necessary, thereby eroding the 12-week leave entitlement unnecessarily. The Final Rule will contain the same guidance; however, this section will be clarified to provide explicitly that the phrase ''one hour or less'' is dispositive.

Five commenters expressed concern that an employee taking intermittent leave could spread the 12-week leave entitlement over an extended period, up to the full 12 month leave period. The Equal Employment Advisory Council suggests that the amount of intermittent leave available be limited to four weeks of the 12 week total available in any 12 months. The Kennedy Memorial Hospitals suggests that a limit of six months be placed on the period over which intermittent leave can be extended. The Koehler Manufacturing Company suggests that employees requesting intermittent leave should be eligible for a shorter time period. Care Providers of Minnesota point out there is no statutory prohibition for reasonably limiting the period of time for intermittent leave.

The statute makes no provision for limiting the time period over which an employee may take leave intermittently or on a reduced leave schedule. To the contrary, § 102(b)(1) of the statute provides that the taking of such leave ''* * * shall not result in a reduction in the total amount of leave to which the employee is entitled under subsection (a) beyond the amount of leave actually taken.'' After due consideration, the Department finds that making such a change would be contrary to the statute and the intent of Congress.

Blue Cross and Blue Shield of Texas, Inc. asks if due to a medical certification an employee is limited to working eight hours per day, and thus is unable to work mandatory overtime hours, may the employee be subject to disciplinary action or may the employer charge the unworked overtime to the employee's FMLA leave entitlement. The question to be answered would be whether the employer's policy requires the taking of other forms of leave (*i.e.*, vacation or sick leave) to cover unworked overtime. The taking of FMLA leave is predicated on the employee's normal workweek (*see* § 825.205 of the Interim Final Rule). The definition of reduced leave schedule in § 101(9) of the statute speaks of *usual* number of hours per workweek, or hours per workday (emphasis added). If the employee's usual or normal workweek is greater than 40 hours or workday is greater than eight hours, the days or hours the employee does not work may be charged against the FMLA leave entitlement if the absence is for an FMLA qualifying reason. If, however, the overtime is assigned/required on an ''as needed'' basis, not a part of the employee's usual or normal work time, or is voluntary, the unworked overtime may not be charged to the employee's FMLA leave entitlement. The employee is not subject to disciplinary action for being unable to work overtime as a result of limitations contained in a medical certification obtained for purposes of FMLA.

The law firm of Sommer and Barnard urges that an employee be required to furnish evidence satisfactory to the employer that periods of intermittent leave requested for birth or placement of a child before the actual birth or placement will be used for the required reason, and that all the leave requested/approved will be devoted to the purposes for which the employee was eligible for such leave. The Final Rule has been amended in § 825.113(d) to permit an employer to require reasonable documentation of a family relationship for purposes of FMLA leave. It would be unreasonable, however, to expect an employee to predict with any precision the amount of leave that will be required in conjunction with a birth or placement when time spent in these activities is largely outside the employee's control (*e.g.*, attorneys, doctors, the courts, social workers, *etc.*). The possibility, moreover, that employees would lie to their employer and not use leave for the purposes indicated is not unique to leave taken prior to the birth or placement for adoption or foster care. Such fraud should be treated like any other fraud in connection with leave. See also § 825.312(g). In any event, employer permission is required for an employee to take intermittent FMLA leave for birth (other than medically-necessary leave) or placement for adoption or foster care. Consequently, the suggested change will not be made.

Massmutual Life Insurance Company recommends that reduced schedule leave and intermittent leave for personal medical leave should be limited solely to those times which are scheduled for treatment, recovery from treatment or recovery from illness. The definition of leave which may be taken intermittently or on a reduced leave schedule basis for an employee's own serious condition or the serious health condition of an immediate family member has been changed in § 825.203 of the Final Rule to incorporate this suggestion. The employee will also be entitled to take leave intermittently or on a reduced leave schedule for periods of disability due to a chronic serious health condition or to provide needed care for an immediate family member with a serious health condition, including psychological care when such care would prove beneficial to the patient.

Temporary Transfers to Alternative Positions (§ 825.204)

If an employee needs to take intermittent leave (*e.g.*, for medical treatment) or leave on a reduced leave schedule, the employer may temporarily transfer the employee to an available alternative position for which the employee is qualified and which better accommodates recurring periods of leave than the employee's regular position. The alternative position must have equivalent pay and benefits; it need not have equivalent duties. The conditions of a temporary transfer may not violate any applicable collective bargaining agreement containing higher standards or more generous provisions for employees than those required by FMLA, and employers must observe any other applicable standards under Federal or State laws (*e.g.*, the ADA).

As the legislative history explains, this provision was intended to give greater staffing flexibility to employers by enabling them temporarily to transfer employees who need intermittent leave or leave on a reduced leave schedule to positions more suitable for recurring periods of leave. At the same time, it ensures that employees will not be penalized for their need for leave by requiring that they receive equivalent pay and benefits during the temporary transfer. Congress anticipated that a reduced leave schedule would often be perceived as desirable by employers who would prefer to retain a trained and experienced employee part-time for the weeks that the employee is on leave

rather than hire a full-time temporary replacement.

The Women Employed Institute and Women's Legal Defense Fund suggested revisions to the regulations to clarify that temporary transfers should last only as long as an employee needs to take leave intermittently or on a reduced leave schedule; once the leave need ends, the employer must then restore the employee to his or her original or an equivalent position.

Kaiser Permanente questioned whether an employer could provide ''pay in lieu of benefits'' if that is the general practice for employees who work less than 20 hours per week. William M. Mercer, Inc. asked if, when a full-time employee is temporarily transferred to a part-time reduced leave schedule, and part-time employees ordinarily have either reduced health care coverage or pay higher premiums, can the transferred employee's benefits be similarly reduced? Van Hoy, Reutlinger & Taylor noted that an employer is required to maintain the employee's full-time benefits (*e.g.*, life and disability insurance) while the employee is working part-time on intermittent leave but questioned, where such policies are based on pay, whether the employer may reduce such benefits—if not, the regulations should contain a stronger warning so employers do not inadvertently reduce such benefits. The University of California asked for clarification of whether only health benefits are required to be maintained for employees who take FMLA leave, whether they are on full leave, reduced leave schedule, intermittent leave, or while in an alternative position. The ERISA Industry Committee requested additional clarification on the treatment of annual bonuses, particularly whether they may be prorated for time on leave (a pro rata reduction would impact the calculation of other benefits).

An employee may not be required to take more leave than is necessary to satisfy the employee's need for FMLA leave. If a full-time employee switches to a part-time or reduced leave schedule under FMLA, the employee must continue to receive the same (full) level of benefits which the employee enjoyed before starting the FMLA leave, and may not be required to pay more to maintain that same level of benefits enjoyed prior to the start of the FMLA reduced leave schedule, regardless of any employer policy applicable to its part-time employees that would suggest a different result. To permit otherwise would result in the employee not receiving equivalent pay and benefits as required by FMLA. An employer may only proportionately reduce the kinds of benefits that are computed on the basis of the number of hours worked during the period, *e.g.*, vacation or sick leave, insurance or other benefits that are determined by the amount of earnings. Once an employee's need for a reduced leave schedule under FMLA has ended, the employer must restore that employee to his or her original position or to a position that is equivalent to the original position (with equivalent benefits, pay, *etc.*). An employer may not transfer an employee to an alternative position in order to discourage the employee from taking the leave or otherwise create a hardship for the employee (*e.g.*, transfer to the ''graveyard'' shift; assigning an administrative employee to perform laborer's work; reassigning a headquarters staff employee to a remote branch site, *etc.*). This section has been so clarified. The relationship between FMLA's provisions and collective bargaining agreements containing greater employee rights or more generous provisions for employees is discussed in § 825.700.

Determining the Amount of Intermittent/Reduced Leave (§ 825.205)

Only the amount of leave actually taken while on an intermittent or reduced leave schedule may be charged as FMLA leave. This means, for example, that if a full-time employee who normally worked eight-hour days switched to a half-time (four hours per day) reduced leave schedule, only ½ week of FMLA leave could be charged each week (and, at that rate, it would take 24 weeks to exhaust the employee's FMLA leave entitlement if no other FMLA leave were taken during the 12-month period). For employees working part-time or variable hours, the amount of leave entitlement is determined on a proportional basis by comparing the new schedule (after starting FMLA leave) to the normal schedule (before starting FMLA leave). If an employee's schedule varies week-to-week, a weekly average over the 12 weeks prior to starting FMLA leave is used for establishing the ''normal'' schedule.

California Rural Legal Assistance, Inc. suggested that the regulations make clear that FMLA leave may not be charged during a week when work would not otherwise be available. The Society for Human Resource Management questioned how a week of FMLA leave would be counted for employees who work seven days and then are off for seven days.

An employee's FMLA leave entitlement may only be reduced for time which the employee would otherwise be required to report for duty, *but for the taking of the leave*. If the employee is not scheduled to report for work, the time period involved may not be counted as FMLA leave. See § 825.200(f).

The American Compensation Association was not clear on how to calculate the pro rata depletion of FMLA leave time for an employee presently on a reduced leave schedule due to a disability who needs intermittent leave, perhaps one day per week, and asked if it would be based on the pre-disability schedule or the current work schedule. Chicagoland Chamber of Commerce expressed concern that this section might be construed to allow an exempt employee who normally works more than 40 hours per week to receive FMLA leave on an intermittent or reduced leave schedule basis in excess of his or her 12-week entitlement, suggesting the greatest number of hours any employee should be entitled to receive for intermittent or reduced leave schedule purposes is 480 (12 weeks × 40 hours). The Chamber of Commerce of the USA suggested the regulation make clear that the 12-week average rule is applied only if an employee's normal schedule fluctuates, and not if it fluctuates due to overtime hours of work.

Section 102 of FMLA states that an eligible employee is entitled to ''a total of 12 *workweeks of leave*'' during the 12-month period. The statute uses the ''workweek'' as the basis for leave entitlement, and an employee's normal ''workweek'' prior to the start of FMLA leave is the controlling factor for determining how much leave an employee uses when switching to a reduced leave schedule. Nothing in the Act or its legislative history suggests that the maximum amount of leave available to an employee is 480 hours. If an employee's normal workweek exceeds 40 hours, the calculation of total FMLA leave available for pro rata reduction of total leave entitlement during intermittent leave or reduced leave schedules should be based on the employee's normal workweek—even if it exceeds 40 hours.

If an employee with a disability has already switched to a *permanently* reduced work schedule for reasons other than FMLA, and needs leave on an intermittent basis, the hours worked under the current schedule would be used for making the calculation as provided in § 825.205(c).

''541'' Exemption (§ 825.206)

FMLA leave may be unpaid. Section 102(c) of FMLA expressly provides that where an employee is otherwise exempt

from the Fair Labor Standards Act's (FLSA) requirements for payment of minimum wage and overtime compensation for hours worked over 40 per week (the exemption for ''executive, administrative, and professional'' employees under FLSA § 13(a)(1)), compliance by an employer with FMLA's requirement to provide unpaid leave shall not affect the exempt status of the employee under the FLSA exemption and its regulations (29 CFR Part 541). Thus, employers can ''dock'' the pay of otherwise-exempt, salaried employees for FMLA leave taken for partial day absences. If an FLSA-exempt employee needs to work a reduced leave schedule under FMLA, the employer may deduct from the employee's salary partial-day absences for any hours taken as intermittent or reduced schedule FMLA leave within the workweek without causing loss of the employee's exempt status under 29 CFR Part 541. By operation of the statute (FMLA), this exception to the FLSA ''salary basis'' rule extends only to leave which qualifies as FMLA leave (*i.e.*, FMLA-eligible employees, working for FMLA-covered employers, who take FMLA leave only for reasons which qualify as FMLA leave).

Twenty comments were received on this provision. Many commenters complained that the tension between FMLA's requirement to grant unpaid leave and FLSA's ''salary basis'' rule prohibiting partial-day deductions from pay for FLSA-exempt employees discourages employers from maintaining more generous family leave policies that were in effect prior to FMLA, or from extending FMLA leave rights to non-covered or non-eligible employees, because of the risk of jeopardizing the exempt status of entire classes of employees. The Personnel Department of Whatcom County, Washington, noted the inequitable result under the rule that causes non-exempt employees to obtain a ''better package'' under FMLA than exempt employees do. In contrast, the Service Employees International Union stated it would have been inappropriate for DOL to expand FMLA's exception to the FLSA ''salary basis'' test beyond the use of FMLA-qualified leave. The United Food and Commercial Workers International Union opposed allowing even FMLA-required deductions from an employee's salary without affecting the employee's qualifications for exemption under the FLSA because it permits the employer to reduce an employee's wages for hourly leave without having to grant overtime pay for hours over 40 per week. Van Hoy, Reutlinger & Taylor recommended that the final rule also address how employers treat salaried but *non-exempt* employees who are paid on the ''fluctuating workweek'' method for payment of half-time overtime compensation when FMLA leave results in fewer than 40 hours being worked in the workweek.

An employee subject to FLSA's overtime requirements who is paid on a salary basis and whose workhours fluctuate each week may be paid overtime compensation under the ''fluctuating workweek'' method of payment described in 29 CFR 778.114. Where the employee and employer mutually agree that the salary amount will compensate the employee for all straight-time earnings for whatever hours are worked in the week, whether few or many, payment of extra compensation, in addition to the salary, for all overtime hours worked at one-half the ''regular rate'' will meet FLSA's overtime compensation requirements. Because the salary covers ''straight-time'' compensation for however many hours are worked in the workweek, the employee's ''regular rate'' varies each week (determined by dividing the salary by the number of hours worked each week). Payment for the overtime hours at one-half the rate computed each week, in addition to the salary, results in payment of time-and-one-half the regular rate for all overtime hours worked each week. The ''fluctuating workweek'' method of payment for overtime hours may not be used unless the salary amount is enough to yield average hourly straight-time earnings in excess of the statutory minimum wage for each hour worked in the weeks when the employee works the greatest number of hours. Typically, it is mutually agreed by the parties under these types of salary arrangements that the salary will be paid as straight-time compensation for however many or few hours are worked, long weeks as well as short weeks, under the circumstances of the employment arrangement as a whole.

Therefore, because payment of the agreed-upon salary is required in each short workweek as a prerequisite for payment of overtime compensation on a ''fluctuating workweek'' basis, employers may not dock the salary of an employee paid on this basis who takes FMLA leave intermittently or on a reduced leave schedule without abandoning the ''fluctuating workweek'' overtime formula. An employer may either continue paying such an employee the agreed-upon salary in any week in which any work is performed during the employee's FMLA leave period, or may choose to convert the employee to an hourly basis of payment, with payment of proper time-and-one-half the hourly rate for any overtime hours worked during the period of the condition for which FMLA leave is needed intermittently or on a reduced leave schedule basis, and later restore the salary basis of payment after the employee's need for intermittent or reduced schedule FMLA leave has concluded. If an employer chooses to follow this exception from the fluctuating workweek method of overtime payment, it must do so uniformly for all employees paid on a fluctuating workweek basis who take FMLA leave intermittently or on a reduced leave schedule, and may not do so for employees taking leave under circumstances not covered by FMLA. The final rule has been clarified to reflect this policy.

While the Department recognizes the view, as some commenters noted, that a tension exists between partial-day docking under the FLSA ''salary basis'' rule and the intent of FMLA to encourage more generous family and medical leave policies, we are constrained by the literal language of the statutory terms to adhere to the policy set forth in the Interim Final Rule. By operation of FMLA, the statutory exception to the FLSA 541 exemption's ''salary basis'' rule extends only to leave qualifying as FMLA leave that is taken by FMLA-eligible employees employed by FMLA-covered employers. No further revisions are made in this section.

Paid or Unpaid Leave (§ 825.207)

FMLA requires *unpaid* leave, generally. If an employer provides *paid* leave of fewer than the 12 workweeks required by FMLA, the additional weeks necessary to attain 12 workweeks of leave in the 12-month period may be unpaid. FMLA also provides for substituting appropriate paid leave for the unpaid leave required by the Act. An employee may elect, or an employer may require the employee, to substitute any of the employee's accrued paid *vacation* leave, *personal* leave, or *family* leave if it is: (1) for the birth of a child, and to care for such child; (2) for placement of a child with the employee for adoption or foster care, and to care for such child; or, (3) to care for the employee's spouse, child, or parent, if the spouse, child or parent has a serious health condition. The legislative history explains that ''family leave'' as used here in FMLA refers to paid leave provided by the employer ''* * * covering the *particular circumstances* for which the employee

is seeking leave under [FMLA for birth or adoption of a child, or for the serious health condition of an immediate family member] * * *'' (emphasis added). Based on this legislative history, the regulations similarly included a limitation that family leave may only be substituted ''under circumstances permitted by the employer's family leave plan'' (§ 825.207(b)).

In addition, the employee may elect, or the employer may require the employee, to substitute any of the employee's accrued paid *vacation* leave, *personal* leave, or *medical* or *sick* leave for FMLA leave taken for the serious health condition of an immediate family member (spouse, child, or parent) or for the employee's own serious health condition that makes the employee unable to work, *except that* an employer is not required to provide paid *sick* leave or paid *medical* leave ''in any situation in which the employer would not normally provide any such paid leave.'' (FMLA § § 102(d) (2) (A) & (B).)

These substitution provisions are intended to allow for the specified paid leaves that have accrued but have not yet been taken by an employee to be substituted for the unpaid leave required under FMLA, in order to mitigate the financial impact of wage loss due to family and temporary medical leaves. The substitution provisions assure that an employee is entitled to the benefits of applicable paid leave, plus any remaining leave time made available by FMLA on an unpaid basis.

The State of Oregon's Bureau of Labor and Industries asked for clarification of whether the employee or the employer had the prerogative or control over the decision to substitute paid leave for FMLA leave. Sommer & Barnard suggested additional guidance was needed on employee substitution where the employer does not require it. The California Department of Fair Employment and Housing recommended the rule clearly state that employees have the right to substitute paid vacation during FMLA leave, and suggested further amendments to allow employers to require certification for FMLA leave where an employee desires to use paid vacation leave. The California Teamsters Public Affairs Council opposed permitting an employer to force an employee to use paid vacation or personal leave during FMLA leave absent a specific request from the employee to substitute such paid leave. The Equal Employment Advisory Council suggested the regulations allow employers to restrict substitution of paid vacation if the employer policy normally restricts vacations to certain times during the year. Chevron and the American Apparel Manufacturers Association, Inc. stated that paid leave should only be permitted at the employer's option (or discretion). Cincinnati Gas & Electric Company suggested that paid leave should be available for substitution only under the rules of the plan which established the paid time off.

FMLA's substitution language provides that ''* * * an eligible employee may elect, or an employer may require the employee, to substitute any of the * * *'' appropriate paid leave for any part of the 12-week period of FMLA leave. Under these terms, if an employee does not elect to substitute appropriate paid leave when requesting FMLA leave, the employer has the right to require that the employee do so. An employee always has the right to request, in the first instance, that appropriate paid leave be substituted. There are no limitations, however, on the employee's right to elect to substitute accrued paid *vacation* or *personal* leave for qualifying FMLA leave, and the employer may not limit the timing during the year in which paid vacation may be substituted for FMLA-qualifying absences or impose other limitations. If the employee does not initially request substitution of appropriate paid leave, the employer retains the right to require it. An employer may not override an employee's initial election to substitute appropriate paid leave for FMLA leave, nor place any other limitations on its use (*e.g.*, minimum of full days or weeks at a time, *etc.*). At the same time, in the absence of other limiting factors (such as a State law or an applicable collective bargaining agreement), where an employee does not elect substitution of appropriate paid leave, the employee must nevertheless accept the employer's decision to require it, even where the employee would desire a different result. The regulations have been clarified to address these principles.

The Women's Legal Defense Fund, 9 to 5, National Association of Working Women, AFL–CIO, Food & Allied Service Trades, International Brotherhood of Teamsters, and Service Employees International Union opposed what they perceived as unwarranted regulatory restrictions on the ability to substitute paid ''family leave'' under FMLA, and recommended deletion of the restrictive language. We have revised the language in § 825.207(b) to track the language of the legislative history, which explains the meaning of ''family leave'' in this context. The effect of the revision, however, is the same result as under the terms of the Interim Final Rule.

Sixteen comments raised concerns over the relationship and interaction between FMLA leave and absences caused by on-the-job, workers' compensation injuries, and requested further guidance. The Women Employed Institute and the Women's Legal Defense Fund argued that workers' compensation cannot be substituted as paid leave for FMLA leave, even if such payments are proxies for lost wages. Many employer commenters argued alternatively that employers should not only be allowed to count the workers' compensation absence as FMLA leave, but they should continue to be allowed to exercise their rights under workers' compensation laws to require an employee to return to work at restricted or ''light'' duty. The Employers Association of Western Massachusetts, Inc. requested clarification of whether insured disability plans and self-insured disability plans are similarly considered a form of ''accrued paid leave'' under FMLA.

An employee who incurs a work-related illness or injury elects whether to receive paid leave from the employer or worker's compensation benefits. An employee cannot receive both. Therefore, where a work-related illness or injury also causes a ''serious health condition that makes the employee unable to perform the functions of the position of such employee'' within the meaning of FMLA, and the employee has elected to receive worker's compensation benefits, an employer cannot require the employee to substitute, under FMLA, any paid vacation or other leave during the absence that is covered by payments from the State workers' compensation fund. Similarly, an employee cannot elect to receive both worker's compensation and paid leave benefits. Such an absence can count, however, against an employee's FMLA leave entitlement if it is properly designated at the beginning of the absence as required by these regulations. Neither the statute nor its legislative history suggests that time absent from work for work-related accidents should not run concurrently for purposes of FMLA and the State workers' compensation laws (provided the illness or injury also meets FMLA's definition of ''serious health condition''). Indeed, FMLA's legislative history suggests that the Congress contemplated this result—in describing the intended meaning of ''serious health condition,'' the Committee reports refer to ''injuries caused by serious accidents on or off the

job'' (among other examples). On the other hand, payments from a State workers' compensation fund are not benefits provided by the employer, nor are they a form of ''paid leave'' provided by the employer for purposes of FMLA's substitution provisions. While the time absent from work can simultaneously count under both FMLA and State workers' compensation programs, payments provided by State workers' compensation funds are not considered ''accrued paid medical or sick leave'' within the meaning of FMLA. In addition, when an employee is receiving payments from the State workers' compensation fund, the employee may *not* elect, nor may the employer *require* the employee, to exhaust any form of paid leave provided by the employer during any portion of the absence covered by the workers' compensation payments. Payments provided under other types of plans covering temporary disabilities (whether provided voluntarily through insurance or under a self-insured plan, or required to meet State-mandated disability provisions (*e.g.,* pregnancy disability laws)) are to be treated similarly under FMLA—the time may be charged against an employee's FMLA leave entitlement (provided employees are properly notified of the designation at the commencement of the absence and any group health benefits are maintained by the employer as if the employee had continued to work, as required by these regulations). But an employee's receipt of such payments precludes the employee from electing, and prohibits the employer from requiring, substitution of any form of accrued paid leave for any part of the absence covered by such payments.

As will be discussed in further detail in connection with § 825.702, an employer is precluded from requiring an employee to return to work prematurely in a ''light duty'' assignment, instead of taking FMLA leave, if the employee remains unable to perform any one or more of the essential functions of the original position and the employee has not yet exhausted his or her full FMLA leave entitlement in the 12-month period. The reference point for determining an employee's essential job functions is the position held by the employee *when the need for FMLA leave arises, i.e.,* when the employee's notice of the need for leave is given or leave commences, whichever is earlier. An employer may not modify a job to eliminate essential job functions in an effort to deny an employee his or her FMLA leave rights. On the other hand, FMLA does not prevent the continuation of lawful policies under State workers' compensation programs that discontinue wage replacement payments if and when an employee refuses to accept a medically-approved light duty assignment. In such a case, the employee may continue on FMLA leave where the employee cannot perform any one or more of the essential functions of the employee's former position, and the employee would have the right to elect to substitute appropriate paid leave, or continue on unpaid FMLA leave, until the employee has exhausted his or her 12-week FMLA leave entitlement in the 12-month period. The regulations are clarified in response to these comments to address absences covered by State workers' compensation laws.

The Chamber of Commerce of the USA stated that employers should be able to draft paid leave policies expansively or restrictively, and if an employee is unable to use paid leave, the leave will be unpaid. The National Restaurant Association similarly suggested that any substituted paid leave must be taken in accordance with the employer's paid leave policies. Fisher & Phillips considered the regulations contradictory and inconsistent with FMLA, because they allow employees to substitute paid vacation or personal leave for unpaid FMLA leave while prohibiting employers from imposing any limitations, yet also state that employees may be required to comply with requirements of the employer's leave plan. Fisher & Phillips suggested that all of an employer's normal restrictions on the use of paid leave should continue to apply when paid leave is substituted for FMLA leave, because FMLA does not require the use of paid leave. Sommer & Barnard and Fisher & Phillips also objected to § 825.207(g), which restricts an employer's ability to request notice and certification for FMLA leave where the employee substitutes paid leave and the employer's normal leave policies do not require notice or certification (the employee may only be required under the Interim Final Rule to comply with the less-stringent requirements of an employer's plan, and not any more stringent notice or certification requirements of FMLA, unless the paid leave period is followed by unpaid FMLA leave). These two commenters and United HealthCare Corporation suggested employers be allowed to deny FMLA leave unless FMLA's notice and certification requirements are met, whether the leave is unpaid or substituted paid leave, to assure employers of their statutory rights and avoid confusion for employees. The University of California asked that DOL clarify how the employer confirms that requested time off to care for an ill family member or for personal illness qualifies as FMLA leave if the employer cannot confirm the request by asking for medical certification.

In response to the comments, this section is clarified. When paid leave is substituted for unpaid FMLA leave, and an employer has less stringent procedural requirements for taking that kind of leave than those of FMLA, only those less stringent requirements may be applied. An employee who complies with the employer's less stringent leave plan requirements in such cases may not have leave for an FMLA purpose delayed or denied on the grounds that the employee failed to comply with stricter requirements of FMLA. However, where accrued paid vacation or personal leave is substituted for unpaid FMLA leave for a serious health condition, an employee may be required to comply with any less stringent medical certification requirements of the employer's sick leave program. Appropriate revisions have been made in the notice and certification provisions of §§ 825.302(g), 825.305(e), and 825.306(c). An employer of course may make revisions to its leave program to require notice or certification that corresponds to FMLA requirements, or may treat paid and unpaid leave differently, provided the program is not amended in a discriminatory manner that treats employees on FMLA leave differently from other, similarly situated, employees.

The State of Nevada's Department of Personnel recommended the regulations be revised to allow substitution of compensatory time-off for unpaid FMLA leave. The Town of Normal (Illinois) suggested the employer should be able to *require* an employee to take compensatory time for FMLA leave. Montgomery County (Maryland) recommended that DOL's interpretative ruling that prohibits employers from using compensatory time as FMLA leave be included in the regulations.

The use of compensatory time off is severely restricted under the Fair Labor Standards Act (FLSA) in ways that are incompatible with FMLA's substitution provisions. First, ''comp'' time is not a form of accrued paid leave mentioned in the FMLA or legislative history for purposes of substitution. It is also not a benefit provided by the employer. Rather, it is an alternative form for paying public employees (only) for overtime hours worked. The public employee's ''comp time bank'' is not the property of the employer to control, but

rather belongs to the employee. If a public employee terminates employment, any unused comp time must be ''cashed out.'' Thus, FMLA's provisions allowing an employer to unilaterally *require* substitution would conflict with FLSA's rules on public employees' use of comp time only pursuant to an agreement or understanding between the employer and the employee (or the employee's representative) reached *before* the performance of the work. A public employee who has accrued comp time off must also be permitted to use the time ''within a reasonable period after making the request *if the use of compensatory time does not unduly disrupt the operations of the public agency*'' (FLSA § 7(o), emphasis added). To the extent that the conditions under which an employee may take comp time off are contained in an agreement or understanding, the terms of the agreement or understanding govern the meaning of ''reasonable period'' (29 CFR § 553.25). An agency may turn down an employee's request for comp time off under FLSA if it would be unduly disruptive to the agency's operations. The employer's right to control an employee's use of comp time, including authority to decline a request for its use, would simply be inconsistent with FMLA's provision authorizing the employee to elect to substitute paid leave (without qualification as to whether the time taken would be unduly disruptive). While a public employee may certainly request the use of comp time under FLSA for an FMLA-qualifying absence, the employer may not simultaneously charge the FLSA comp time hours taken against the employee's separate FMLA leave entitlement. To do so would amount to charging (debiting) two separate entitlements for a single absence. Accordingly, public employers may not use their employee's FLSA ''comp time'' banks as a form of ''accrued paid leave'' for purposes of substitution under FMLA, and this section is so revised.

Designating Paid Leave as FMLA Leave (§ 825.208)

This section of the Interim Final Rule placed responsibility on the employer to designate all FMLA leave taken, whether paid or unpaid, as FMLA-qualifying, based on information obtained directly from the employee. Because employees may not spontaneously explain the reasons for taking their accrued paid vacation or personal leave, the regulations allowed employees to request to use their paid leave without necessarily stating that it was for an FMLA purpose, and if the employer rejected the request under its normal leave policies, the eligible employee would be expected to come forward in response to the employer's further inquiry with additional information to enable the employer to determine that it is FMLA leave (which could not be denied). Employers are required to determine *and designate* ''up front'' before leave starts whether any paid leave to be taken counts toward an employee's FMLA leave entitlement, and so notify the employee ''immediately'' upon learning that it qualifies as FMLA leave (in accordance with the employer's ''specific notice to employees'' obligations under § 825.301(c)). Only where leave had already begun and the employer had insufficient information to determine whether it qualified under FMLA could it be retroactively designated as FMLA leave under the Interim Final Rule. Employers were precluded in all cases from retroactively designating any paid leave taken as FMLA leave once the leave had ended and the employee had returned to work.

This section was intended to resolve the question of FMLA designation as early as possible in the leave request process, to eliminate protracted ''after the fact'' disputes. The regulations expected disputes to be resolved through discussions between the employee and the employer at the beginning of the leave rather than at the end. Because of the possible ''stacking'' of unpaid FMLA leave entitlements in addition to an employer's pre-existing leave plan, it appears that some employers that wished to mitigate their exposure to extended leaves by employees have been motivated by the provisions in the Interim Final Rule to try to determine and count all possible FMLA-qualifying absences as FMLA leave (by whatever means, including through overly-intrusive inquiries of employees when they request to use their accrued paid leave).

The Commission on the Status of Women, Equal Rights Advocates, and Gwen Moore, Majority Whip, California Legislature objected to an employer's ability to inquire into the purposes of the employee's paid vacation or personal leave to determine if it qualifies under FMLA, because it allows the employer unfettered discretion to invade the employee's privacy. Federated Investors and Michigan Consolidated Gas Company noted that extracting the reason for an employee's need to be away from work could violate the Americans With Disabilities Act. Many employer groups, in contrast, felt that the employer should be permitted to conduct a reasonable investigation to determine if leave qualifies as FMLA leave (including inquiring of persons other than the employee for purposes of verification, such as the employee's physician).

Blue Cross and Blue Shield of Texas, Inc. and LaMotte Company pointed out that circumstances could arise where the unduly restrictive structure of the regulations disadvantages employees, such as where an employee is about to be disciplined for attendance problems and time previously missed and is precluded, due to the bar against retroactive designation of FMLA leave, for asserting FMLA leave as a defense. Burroughs Wellcome Company, Massmutual Life Insurance Company, and several others noted the restrictive structure was inconsistent with other regulatory provisions that allow up to 15 days from employees to furnish medical certification to substantiate FMLA leaves—where leave is unplanned and of relatively short duration or if the employee or health care provider delay processing the certification, the employee could be back at work before the employer had sufficient information to confirm that the leave qualified under FMLA and the employee would lose FMLA's benefits and protections. Several commenters (including the Texas Department of Human Services) suggested that employers be allowed to designate FMLA leaves immediately upon the employee's return to work. William M. Mercer, Inc. suggested permitting an employer to designate leave as qualifying under FMLA after it has ended if the inability to designate it during the leave resulted from the employee refusing to give needed information, or providing wrong information. The Chamber of Commerce of the USA suggested that employees be required to declare their intention to take FMLA leave at the beginning of an FMLA-qualifying period, and that employers be allowed to consider information from third parties and be allowed to designate leave as FMLA-qualifying within 90 days following the end of a leave period. The Equal Employment Advisory Council suggested similar approaches with related rationales, noting in particular that inquiring into the reasons for employee leave requests for vacation and personal days was having a negative impact on employer-employee relations. EEAC recommended that employees be required to give notice of FMLA leave, and an employer's request for medical certification should be deemed a provisional designation of FMLA leave

(subject to the employee satisfying the certification process).

Sommer & Barnard recommended the regulations be amended to provide that when an employer policy requires an employee to designate paid leave as FMLA leave, the employee shall provide FMLA notice and certification (if applicable). They noted that when § 825.207(g) (which exempts an employee using paid leave that is *not* followed by unpaid FMLA leave from FMLA's notice and certification requirements) and § 825.208(a)(1) (relieves an employee using paid leave from any obligation to explain the reason for the leave unless the employer denies the request) are linked with § 825.208(b) (FMLA determinations to be based only on information furnished directly by the employee), the rules effectively deprive an employer of the opportunity to make an informed determination that paid leave will be used for FMLA-qualifying reasons and should be counted as FMLA unless the employee volunteers sufficient accurate information. Moreover, this structure could encourage employees to withhold information and misrepresent facts to expand the aggregate of employer-paid leave and FMLA's unpaid leave entitlement.

After careful consideration of the many comments and objections received on this section, the Department has revised the regulations along the following lines. Designation of leave as being FMLA-qualifying is still expected to take place ''up front'' whenever possible. The employer's notification to the employee of the designation may be oral, but must be confirmed in writing, no later than the next regular payday (unless less than a week remains until the next payday). The written notice may be in any form, including a notation on the pay stub.

If the employer has the requisite knowledge to determine that a leave is for an FMLA reason at the time the employee either gives notice of the need for leave or it commences, and the employer does not notify the employee as required at that time that the leave is being designated as FMLA leave, the employer may not then designate the leave as FMLA leave retroactively; it may designate only prospectively, as of the date of notification to the employee of the designation, that the time is being charged against the employee's FMLA leave entitlement. The employer may not designate leave that has already been taken as FMLA leave after the employee returns to work, with two exceptions: (1) if an employee is out for an FMLA-qualifying reason and the employer does not learn of the reason for the leave until the employee returns to work, the employer may designate the leave as FMLA leave promptly (within two business days) upon the employee's return to work (including a provisional designation based on information from the employee, subject to confirmation upon the employer's receipt of medical certification if the employer requires it and has previously notified the employee of the requirement); or (2) if the employer has provisionally designated the leave under FMLA and is awaiting receipt from the employee of medical certification or other ''reasonable documentation'' allowed by this amended rule to confirm that the leave was FMLA-qualifying, or the employer and employee are in the process of obtaining second or third medical opinions. If the employer does not designate leave as FMLA leave in a timely manner as required by the regulations, the employer may not later designate the absence as FMLA leave absent the circumstances specified above. Similarly, the employee is not entitled to the protections of the FMLA if the employee gives notice of the reason for the leave later than two days after returning to work. The regulations are also clarified that if an absence which begins as other than FMLA leave later develops into an FMLA-qualifying absence (*e.g.,* employee takes a two-week vacation for a ski trip and suffers a severe accident requiring hospitalization beginning the second week), the entire portion of the leave period that qualifies under FMLA may be counted as FMLA leave (*e.g.,* the second week). Employers must still base their designations of FMLA leave on information obtained directly from the employee or the employee's spokesperson (in the event the employee is incapacitated or otherwise designates a point of contact, *e.g.,* an immediate family member). If an employee does not provide information regarding the reason for the leave, leave may be denied.

Designating leave as FMLA-qualifying does not block greater ADA rights. *See* § 825.702.

Benefit Entitlements During FMLA Leave (§ 825.209)

Eligible employees who take FMLA leave are entitled to be restored, at the end of their leave, to the same jobs they held when the leave commenced, or to an equivalent job with equivalent employment benefits, pay, and other terms and conditions of employment. The taking of FMLA leave cannot result in the loss of any employment benefit accrued before the leave began; however, nothing in FMLA entitles restored employees to the accrual of seniority or employment benefits during the leave, or to any right, benefit, or position of employment other than what they would have been entitled to had they not taken the leave. (§§ 104(a)(1), (2), and (3) of FMLA.) In addition, during a period of FMLA leave, the employer must maintain coverage under any ''group health plan'' at the level and under the conditions coverage would have been provided if the employee had continued to be employed continuously during the leave. (§ 104(c)) The legislative history explains that this is strictly a maintenance of benefits provision. FMLA does not require an employer to provide health benefits if it does not do so at the time the employee commences leave. The legislative history notes further, however, that if an employer establishes a health benefits plan during an employee's leave, FMLA's provisions should be read to mean that the entitlement to health benefits would commence at the same point during the leave that employees would have become entitled to such benefits if still on the job.

Several commenters requested further clarification in this section on the impact on continued FMLA leave rights, maintenance of health benefits, and restoration to employment when the job of an employee on FMLA leave is eliminated, such as through a department-wide downsizing or layoff. FMLA's legislative history explains that the explicit limitation in FMLA § 104(a)(3) means that if, but for being on leave, an employee would have been laid off, the employee's right to reinstatement is whatever it would have been had the employee not been on leave when the layoff occurred. In order to clarify this point, the regulations are revised at § 825.211(c) to provide that, except as required by COBRA and for ''key'' employees, an employer's obligation to maintain health benefits during FMLA leave and to restore an employee after the planned leave under FMLA ceases if and when the employee's employment relationship would have terminated (*e.g.,* the employee's position is eliminated as part of a nondiscriminatory reduction in force, *i.e.,* no transfer or reassignment option is available to similarly-affected employees not on FMLA leave); the employee informs the employer unequivocally of the employee's intent not to return from leave (including when the leave would have begun if the employee so informs the employer before the leave begins—unless the employee is on *paid* leave during the period); the employee fails to return

from leave, and thereby terminates employment; or the employee stays on leave (*i.e.*, is unable to return to work) after exhausting his or her FMLA leave entitlement in the 12-month period.

The Chamber of Commerce of the USA suggested clarifications to unambiguously state that plan changes such as premium increases, increased deductibles, *etc.*, which apply to active employees also apply to employees who are on FMLA leave. This requirement has been clarified.

A number of commenters requested specific guidance in this section regarding how particular fringe benefit plans or practices with respect to ''cafeteria plans,'' ''flexible spending accounts,'' and the ''continuation of health benefits provisions'' of title X of the Consolidated Omnibus Budget Reconciliation Act of 1985 (COBRA) interact with FMLA, particularly in regard to the tax implications of such programs. These issues cannot be resolved through FMLA's implementing regulations, because they are within the authority of the Internal Revenue Service (IRS). Questions regarding these matters should be directed to the IRS. (*See* Notice 94–103 in Internal Revenue Bulletin No. 1994–51, dated December 19, 1994.)

Nationsbank Corporation (Troutman Sanders) and Southern Electric International, Inc. (Troutman Sanders) stated that the rule failed to specify whether family members whose coverage is dropped at the employee's election during FMLA leave may be required to requalify for coverage upon the employee's return to work, and suggested that FMLA was not intended to exempt non-employee insureds from requalification. An employee is entitled to be restored to the same level of benefits which the employee received prior to starting the leave, including family or dependent coverages, without any qualifying period, physical examination, exclusion of pre-existing conditions, *etc.*, and the regulations are clarified to reflect this requirement.

The UAW International Union recommended that this section be amended to state that an employer may not treat workers who take FMLA leave in a manner that discriminates against them—*e.g.*, if workers on other forms of paid or unpaid leave are entitled to have coverage maintained for other, non-health plan benefits (life insurance, disability insurance, *etc.*), then the employer is required to follow its established practice or policy for maintaining these benefits for workers on paid or unpaid FMLA leave. This is addressed under the ''prohibited acts'' section of the regulations, at § 825.220. This section has been clarified to address employees' entitlements to holiday pay and other benefits while on FMLA leave.

The law firm of Alston and Bird recommended that the term group health plan should not include non-employment related health benefits paid directly by employees through voluntary deductions, *e.g.*, individual insurance policies. We agree with the recommendation, and language has been added to § 825.209(a) to exclude such benefits from the definition of group health plan, and to make clear that an employer is not responsible for maintaining or restoring such benefits for employees who take FMLA leave.

Employee Payments of Health Benefit Premiums (§ 825.210)

Because health benefits must be maintained during FMLA leave at the level and under the conditions coverage would have been provided if the employee had continued to work, any share of group health plan premiums which the employee had paid before starting FMLA leave must continue to be paid by the employee during the leave. Any changes to premium rates and levels of coverages or other conditions of the plan that apply to the employer's active workforce also apply to eligible employees on FMLA leave. The regulations discuss options available to employers for collecting premium payments from employees on FMLA leave. Employers must give employees advance written notice of the terms for payment of such premiums during FMLA leave, and an employer may not apply more stringent requirements to an employee on FMLA leave than required of employees on other forms of unpaid leave under the terms of the Interim Final Rule.

One option referenced in § 825.210(b)(4) provided that an employer's existing rules for payment by employees on ''leave without pay'' could be followed, provided prepayment (before the leave commenced) was not required. The State of Oregon's Bureau of Labor and Industry questioned whether existing employer policies that formerly required an employee to assume responsibility for payment of all premiums for group health plan coverage during unpaid leave (both employer *and* employee shares) could continue to operate under FMLA, as § 825.210(b)(4) appeared to imply, or did §§ 825.210 (b)(4) and (e) refer only to the manner of payment rather than the duty to pay the premiums itself? The payment obligations of employers for group health plan premiums during FMLA leave are subject to the same conditions that coverage would have been provided if the employee had continued to work; thus, employers cannot increase the employee's share of premiums during unpaid FMLA leave. The rules referred only to the manner of collecting premium payments.

Nationsbank Corporation and Southern Electric International, Inc. (Troutman Sanders) questioned whether an employer may use different options with different employees on a case-by-case basis for recovery of premiums from employees during unpaid FMLA leave or whether the employer must choose one option and apply it uniformly. The rules do not prohibit an employer from using different options on a case-by-case approach to meet the particular needs of employees and the employer, provided the employer does not act in a discriminatory manner.

The Chamber of Commerce of the USA opposed the requirement that employer policies on FMLA leave be equal to other leaves without pay provided by the employer, suggesting there is no statutory basis for this rule. Under the Interim Final Rule, sections 105 and 402 of the Act were construed in § 825.210(e) of these regulations and elsewhere to prohibit an employer from requiring more of employees (or providing less to employees) who take unpaid FMLA leave than the employer's policies require of (or provide to) employees on other forms of unpaid leave. We continue to believe that this regulation represents the proper construction of the Act.

Multi-employer Health Plans (§ 825.211)

Seven comments were received on this section, which describes special rules for maintenance of group health benefits under multi-employer health plans. The Associated General Contractors of America (AGC) contended that DOL wrongly concluded that employers under multi-employer plans must continue to make contributions during FMLA leave and that the legislative history, on which DOL relies, is internally inconsistent. AGC also urged that DOL clarify the FMLA rights of an employee who would have been laid off by a contributing employer during a period of FMLA leave but who might also have found employment with another contributing employer during the same period. Even if the individual might have found other employment with another contributing employer, AGC contends that the employer of the employee when the FMLA leave commenced has no further obligations under FMLA beyond the date on which he or she would have

been laid off. Constructors Association of Western Pennsylvania filed similar views on this point.

These last comments reflect a proper interpretation of FMLA, as reflected throughout the regulations. Coverage by the group health plan must be maintained at the level coverage would have been provided if the employee continued to be employed instead of taking FMLA leave. As discussed elsewhere in these regulations, this means, for example, that if, but for being on leave, an employee would have been laid off, the employee's rights under FMLA, including the requirements to maintain group health plan coverage, are whatever they would have been had the employee not been on leave when the layoff occurred. And, of course, these FMLA obligations apply only with respect to an ''eligible employee'' who has met the length of employment and hours of service tests. Neither the employer nor the multiemployer plan has any obligation under FMLA with respect to persons who are not ''eligible employees.'' The regulations are revised to clarify that group health coverage under a multiemployer plan must be maintained for an employee on FMLA leave at the same level coverage was provided when the leave commenced until either: (1) the FMLA leave entitlement is exhausted; (2) the employer can show that the employee would have been laid off and the employment relationship terminated; or, (3) the employee provides unequivocal notice of an intent not to return to work. With respect to the remaining comments on this section, we consider that the legislative history, as well as the regulations, accurately reflect the intent of the Congress that multiemployer plans must receive contributions during the period of an employee's FMLA leave, and that the rate of contribution is the same amount as if the employee were continuously employed, at the same schedule, at the same wage or salary, and otherwise under the same terms and conditions as he or she normally worked before going on leave, unless a contrary result can be clearly demonstrated by the employer (or by the plan, where appropriate).

Failure to Timely Pay Health Plan Premiums (§ 825.212)

This section provided that an employer's obligation to maintain group health benefits ceases after an employee's premium payment is more than 30 days late. The preamble explained that coverage had to be maintained during the 30-day grace period. If an employer chose to drop group health plan coverage because an employee failed to make timely premium payments, all other FMLA obligations continue to apply during the FMLA leave, including the requirement to restore the employee to an equivalent position after the leave with full coverage and benefits equivalent to what the employee would have had if leave had not been taken and the premium payment had not been missed. An employee returning from FMLA leave may not be required to meet any qualification requirements imposed by the plan, including any new preexisting condition waiting period, waiting for an open season, or passing a medical examination for coverage to be reinstated.

Acrux Investigation Agency, Austin Human Resource Management Association, HCMF (long term care facilities), K-Products, Inc., Pathology Medical Laboratories (Riordan & McKinzie), Equal Employment Advisory Council, and Society of Professional Benefit Administrators opposed requiring the employer to reinstate health coverage (or dependent family member coverage) when the employee failed to make timely premium payments. In effect, they argue, individuals who take FMLA leave receive preferential treatment over active employees who decide to drop coverage and then request reinstatement of coverage, who are then subject to pre-existing condition waiting periods.

FMLA § 104(a)(2) states clearly that the taking of FMLA leave shall not result in the loss of any employment benefit accrued prior to the date on which the leave commenced. To hold a returning employee to a requirement that he or she requalify (or possibly not qualify) for any benefits which were enjoyed before going on FMLA leave would result in the loss of an employment benefit as a result of taking the FMLA leave. Moreover, the employees would not be restored to an equivalent job with equivalent benefits upon their return from FMLA leave if they were made subject to pre-existing condition waiting periods. These results would clearly violate FMLA's statutory standards.

The Service Employees International Union and the AFL–CIO recommended a provision requiring the employer to give a notice of delinquency to the employee when group health plan premiums are late, which would give the employee a reasonable opportunity to cure the delinquency before coverage is dropped. The Women's Legal Defense Fund noted that under the interim rules, an employer could stop making premium payments on the employee's behalf if the employee's check is lost in the mail. WLDF also suggested that the employer be required to notify the employee in writing and give the employee an additional 30 days in which to cure the delinquency, citing regulations promulgated by OPM to implement Title II of FMLA as a model (5 CFR § 890.502; 58 *Fed. Reg.* 39607 (July 23, 1993)). The California Department of Fair Employment and Housing also supported a bar against discontinuing coverage without notice to the employee.

The Department has decided to adopt the suggestions requiring notification to employees before an employer may drop group health plan coverage because of a lack of timely premium payments. Under the OPM regulations cited in the comments, the employing office must notify an employee if payment is not received by the due date that continuation of coverage depends upon receipt of premium payments within *15* days (longer for employees overseas) after receipt of the notice (or 60 days after the date of the notice if return receipt certification is not received by the employing office). DOL is adopting a similar requirement: 15 days notice must be given that coverage will cease if the employee's premium payment is more than 30 days late.

Pathology Medical Laboratories (Riordan & McKinzie) suggested that the rule should allow insurance coverage to be cancelled retroactively to the first date of the period to which the unpaid premium relates. Fisher & Phillips, Sommer & Barnard, William M. Mercer, Inc., and Florida Citrus Mutual filed similar objections to the 30-day grace period during which group health plan coverage must be maintained. The California Department of Fair Employment and Housing suggested a rule allowing employers to discontinue coverage when an employee is more than one regular pay period late, as most insurance is paid in advance on a monthly basis and the current 30-day rule could result in employers having to pay two months of free coverage when the employee fails to make the premium payments. The State of Nevada's Department of Personnel said it was unclear whether the employer's obligation to maintain coverage, and under a self-insurance plan to pay claims, only extends for the 30-day grace period, contending an inequity exists for an employer with a self-insured plan to pay claims despite the debt owed by a non-returning employee while not placing the same requirement on an employer with a fully-insured plan. Wessels & Pautsch suggested that a portion of the burden for maintaining health insurance should be shared by

the insurance provider, *e.g.*, qualification requirements or preexisting condition waiting periods could be waived when an employee fails to make premium payments. Credit Union National Association, Inc. similarly suggested that insurance companies be mandated to waive these requirements. The American Apparel Manufacturers Association, Inc. expressed concern that the rule created an obvious disincentive for employees to maintain their portions of premiums during FMLA leave, because they know their coverage must be maintained by the employer, and suggested that employees be held accountable to their employers for reasonable administrative costs associated with reinstating employees' health coverage as an incentive to the employees to continue paying their share of premiums. The Chamber of Commerce of the USA concurred with the 30-day grace period but suggested clarification that the employer (or health plan insurer) may hold payment of claims under the health plan until the premium payment is made for the coverage period to which the claim relates. Equal Employment Advisory Council noted that some employees elect not to continue health premiums while on FMLA leave, and do not always want coverage reinstated on the first day of return because they would prefer not to incur the immediate cost of premium payments. They recommended that benefits be reinstated on the day of return if the employee resumes premium payments (if applicable); and, if the employee does not wish to resume coverage on the day of return, the employer should be allowed to reinstate coverage on the date the employee requests such reinstatement, provided the employee satisfies all the normal conditions that an employee not on FMLA leave would incur when initiating group health plan coverage.

As noted above, several revisions are included in the final rule in response to the comments received on this section. With respect to voluntary action by employees who elect to withdraw from their group health plan coverage during FMLA leave, and request reinstatement at a desired future date, if their decisions are truly voluntary and future reinstatement on the requested date is not barred by the terms of the plan or the employer, FMLA would not prohibit such employee-employer arrangements. However, the employee may not be required to requalify for any benefits enjoyed prior to the start of FMLA leave without violating the express terms of FMLA § 104(a)(2).

Under the final rule as revised, in order to drop group health plan coverage for an employee whose premium payment is late, the employer must provide written notice to the employee that the payment has not been received 15 days before coverage will cease. If the employer has established policies regarding other forms of unpaid leave that permit the employer to cease coverage retroactively to the first date of the period to which the unpaid premium relates, the employer may cease the employee's coverage retroactively in accordance with that policy, provided the 15-day notice was given. In the absence of such a policy applicable to other forms of unpaid leave, coverage for the employee ceases at the end of the 30-day grace period after the payment was due, again only if the required 15-day notice has been provided. The same rules would apply to payment of claims under self-insurance plans.

With respect to the remaining comments on this section, the Department is making no further changes. FMLA regulates the maintenance of group health coverage by employers for periods of qualifying FMLA leave, but does not extend authority to DOL to enable requiring insurance carriers to waive provisions in their existing contracts with employers or to otherwise bear a portion of the burden for maintaining health insurance for employees who take FMLA leave. The suggestion that employees be held accountable to employers for reasonable administrative costs associated with reinstating employees' health coverage as an incentive for them to continue paying their share of premiums similarly cannot be adopted. Employees who return from FMLA leave are entitled to be restored to the same or an equivalent position with equivalent benefits. Requiring an employee to pay more for the same level of benefits enjoyed previously is not ''equivalent'' and would violate FMLA.

Recovery of Premiums (§ 825.213)

FMLA § 104(c)(2) allows employers in certain cases to recapture the premiums paid for maintaining employees' group health plan coverage during periods of *unpaid* leave under FMLA if the employees fail to return to work after the leave period to which the employee is entitled has expired. This recapture provision does not apply to ''key'' employees who are denied restoration under FMLA § 104(b), nor to any employee who cannot return to work because of the continuation, recurrence, or onset of a serious health condition—either the employee's own or that of an immediate family member (spouse, child, or parent) for whom they are needed to care, or due to other circumstances beyond the control of the employee. An employer may require medical certification to support an employee's claim that the qualifying serious health condition exists. This section of the regulations described the statutory provisions and provided examples of other circumstances beyond the control of the employee. Included was a provision that an employee must return to work for at least 30 calendar days to be considered to have ''returned to work'' for purposes of this provision. Because the statute specifies that the recovery of premiums applies to ''any period of *unpaid* leave under § 102'' when the circumstances permit, the rule stated that an employer may not recover its share of health insurance premiums for any period of FMLA leave covered by *paid* leave. Additional guidance was included in § 825.213(f) concerning ''non-mandatory'' (*i.e.*, other than ''group health plan'') benefits, *e.g.*, life and disability insurance, in an effort to alert employers of the possible adverse consequences of allowing such ''non-mandatory'' benefits to lapse during a period of unpaid FMLA leave and the employer's ability to meet FMLA's requirement to fully restore *all* employment benefits (*not* just group health plan coverage) to eligible employees who return from qualifying FMLA leave.

Several commenters took issue with the underlying statutory provisions discussed in this section, over which DOL has no control. Those comments will not be addressed.

The ERISA Industry Committee commented that providing for employers to collect premiums from non-returning employees provides no practical benefit to employers, suggesting that alternatives be made available such as refundable deposits or advance payments to cover the leave period (advance or ''pre-'' payment was specifically prohibited by § 825.210(b)(4) of the Interim Final Rule). Pima Federal Credit Union similarly viewed the rule as unrealistic—an employee normally cannot or will not repay and legal action by the employer creates destructive, unfavorable publicity and ''ill-will,'' harming employee morale. Loral Defense Systems—Arizona stated it is not feasible for most employers to recover their portions of health insurance premiums unless the employee voluntarily agrees to reimbursement arrangements.

Nationsbank Corporation (Troutman Sanders) commented that the interim rules do not state whether an employer may use a different option to recover premium payments for other welfare benefits, such as disability insurance, than the one selected for recovering health premiums, or whether it must choose one option for recovering all types of premiums. The commenter recommended that employers be allowed flexibility in seeking repayment, to maximize recovery potential. The FMLA regulations do not restrict the employer's available options for recovery. For example, a repayment schedule of partial payments stretched over extended pay periods to account for individual employees' needs and compensation arrangements would not be prohibited.

Six commenters (9 to 5, National Association of Working Women; Federally Employed Women; Women's Legal Defense Fund; Cumberland-Perry Association for Retarded Citizens; American Federation of Teachers/ National Education Association; and the Society for Human Resource Management) commented on the 30-day ''returned to work'' rule in this section. The American Federation of Teachers/ National Education Association and the Women's Legal Defense Fund suggested a single workweek be used (WLDF stated that FMLA provides no basis to allow an employer to recover premiums when an employee returns to work for less than 30 days). In contrast, the Society for Human Resource Management said that 30 days were too short to determine whether an employee intends to return to work for the long term and recommended 60 days; Cumberland-Perry Association for Retarded Citizens also suggested 60 days, or some other demonstration of good faith attempt to return to work to protect employers from manipulative employees. Federally Employed Women, and 9 to 5, National Association of Working Women stated the 30-day period had no basis under the statute and recommended instead language that would create a rebuttable presumption that an employee's failure to return is *not* due to a serious health condition, which could then be overcome by a showing that the failure was due to a serious health condition or other circumstances beyond the employee's control. (WLDF suggested similar rebuttable presumption language.)

In spite of requests from both sides of this issue, the ''returned to work'' definition will remain at 30 days. As the discussion in the legislative history on maintenance of health benefits during FMLA leave suggests, the purpose of the Act is to provide ''job-protected'' leave to eligible employees for the reasons that qualify under the Act. Being restored to the original or an equivalent position of employment after returning from FMLA leave is central to the leave entitlement provisions, and suggests, in a temporal sense, long-term or ''quasi-permanence.'' Thus, the 30-day requirement is not unreasonable. In addition, if an employee transfers directly from taking FMLA leave to retirement (or such a transfer occurs during the first 30 days after the employee returns to work), the employee is considered to have returned to work.

The Chamber of Commerce of the USA opposed the rule that prohibits an employer from recovering premiums paid to maintain group health coverage if the employee does not return to work for reasons beyond the employee's control, *e.g.*, the employee is needed to care for a relative or individual with a serious health condition other than an immediate family member. Lancaster Laboratories requested more definition of events that qualify as ''other circumstances beyond the employee's control.'' The Women's Legal Defense Fund also criticized the inclusion of examples in the negative, *i.e.*, ones that do *not* (or can never) qualify as circumstances beyond the employee's control.

Examples of ''circumstances beyond the employee's control'' have been clarified in the regulations. A mother's, or a father's, decision not to return to work to stay home with a healthy newborn child would not be considered a circumstance beyond the employee's control. On the other hand, if the newborn child has a serious health condition, such as serious birth defects requiring immediate surgery, a parent's decision not to return to work in such a case would be a circumstance beyond his or her control.

Kaiser Permanente noted the regulations referred only to situations involving *requalification* for benefits, but omitted situations where an event covered by a particular kind of insurance occurs while the employee is on unpaid FMLA leave and coverage has lapsed during the leave. The commenter requested further consideration be given to explaining this aspect of FMLA. In one example given by the commenter, an employee is on unpaid leave and there is no continuation of life insurance during the leave. The commenter asked what benefits, if any, the beneficiary would be entitled to if the employee died during the leave. In the second example, disability insurance is discontinued for an employee who takes unpaid FMLA leave to care for a spouse or parent with a serious health condition and the employee becomes disabled during the leave. Can the employee be denied any disability coverage for the condition?

Under FMLA's ''restoration to position'' employment and benefits protection provisions (§ 104 of the Act), there is no obligation to maintain ''non-mandatory'' (other than group health plan) benefits during a period of FMLA leave by operation of FMLA itself; therefore, an employer would not have to incur expenses or pay for the conditions occurring during the period of unpaid leave when coverage lapsed in the two examples given. However, an employer could not exclude any benefit previously enjoyed by the employee who returns to work after the leave. Accordingly, the returning employee in the second example could *not* be denied disability coverage because of any condition which arose during the leave and corresponding lapse of coverage. The employer would be responsible for providing benefits to the employee equivalent to the level enjoyed by the employee prior to starting the leave, regardless of any qualifications imposed by the plan.

Pathology Medical Laboratories (Riordan & McKinzie) questioned the intent of the provision in § 825.213(e) of the Interim Final Rule requiring a self-insured plan to provide benefits during periods in which the employee failed to pay the premium. In addition to being obligated for the payment of covered claims incurred during a period for which the employee paid the premiums, a self-insured plan cannot deny payment of claims during the applicable grace period provided by § 825.212(a), *i.e.*, in the absence of a specific policy for other forms of unpaid leave, coverage for the employee must be maintained during the grace period and may only cease at the *end* of the 30-day grace period (provided the required 15-day notice has been provided).

Fisher & Phillips noted that the definition of ''employment benefits'' in § 825.800 includes ''non-ERISA'' plans. If an employer makes premium payments on behalf of employees on FMLA leave who participate in a non-ERISA plan, the plan may be converted to ERISA status.

The definition of ''employment benefits'' contained in the interim rule was based on FMLA's statutory definition of the same term in § 101(5). However, as discussed above, plans meeting the specific criteria in § 825.209(a) will be excluded from FMLA's definition of covered

''employment benefits,'' to be consistent with a similar narrow exception followed under ERISA. Maintenance of such individual health insurance policies which are not considered a part of the employer's group health plan (as newly defined) are the sole responsibility of the employee, who should make necessary arrangements directly with the insurer for payment of premiums during periods of unpaid FMLA leave.

Notwithstanding these provisions, if an employer's payment of health or welfare benefit premiums (as required to comply with FMLA) changes the plan from a non-ERISA to an ERISA-covered plan, the result is unavoidable in light of the statutory provisions.

William M. Mercer, Inc. suggested that the rule specify more clearly that an employer's ability to recover premiums for non-health benefits includes both the employer and employee share, regardless of the reason for an employee's failure to return to work.

An employer may elect to pay premiums continuously (to avoid a lapse of coverage or otherwise) for ''non-health'' benefits (*e.g.*, life insurance, disability insurance, *etc.*). Like the provision in section 825.212(b) regarding health benefits, this section (as restructured and revised for clarity) provides a new paragraph (b) that where such payments have been made, and the employee returns to work at the conclusion of leave, the employer is entitled to recover only the costs incurred for paying the *employee's* share of any premiums (regardless of an employee's argument that he or she did not want coverage during the leave). If the employee fails to return to work for any reason, the employer may also recover only the employee's share of any non-health benefit costs incurred by the employer.

Rights on Returning to Work (§ 825.214)

FMLA's employment and benefits protection requires that an eligible employee be restored, upon return from FMLA leave, to the original position held by the employee when the leave commenced, or to an equivalent position with equivalent benefits, pay, and other terms and conditions of employment.

Equal Rights Advocates recommended that the regulations interpret FMLA's restoration rights to require that the employer first try to reinstate the employee to the *same* position, and, only if it is not available, restore the employee to an ''equivalent'' position. Women Employed Institute and Women's Legal Defense Fund suggested that employers be required to notify employees no later than the last day of leave if an employer does not intend to restore an employee to the same position.

The State of Oregon's Bureau of Labor and Industries asked if an employee's right to reinstatement under FMLA persists ad infinitum until the employee is offered an equivalent position, or if it is ever extinguished (*e.g.*, where the former job has been eliminated during the leave and no equivalent positions are available when the employee's leave ends). Fisher & Phillips suggested that the regulations should enable an employer to deny reinstatement to a returning employee if it can demonstrate that the job was eliminated for business reasons (citing, for example, where the employee's work can be performed by other workers) and no other ''equivalent'' job is available for the employee.

As explained in FMLA's legislative history, the standard for evaluating job ''equivalence'' under FMLA parallels Title VII's general prohibition against job discrimination (42 U.S.C. 2000e–2(a)(1)), which prohibits ''discriminat[ion] * * * with respect to [an employee's] compensation, terms, conditions, or privileges of employment,'' and is intended to be interpreted similarly:

> The committee recognizes that it will not always be possible for an employer to restore an employee to the precise position held before taking leave. On the other hand, employees would be greatly deterred from taking leave without the assurance that upon return from leave, they will be reinstated to a genuinely equivalent position. Accordingly, the bill contains an appropriately stringent standard for assigning employees returning from leave to jobs other than the precise positions which they previously held.
>
> First, the standard of ''equivalence''—not merely ''comparability'' or ''similarity''—necessarily requires a correspondence to the duties and other terms, conditions and privileges of an employee's previous position. Second, the standard encompasses all ''terms and conditions'' of employment, not just those specified. (Report from the Committee on Labor and Human Resources (S.5), Report 103–3, January 27, 1993, p. 29.)

Given this history, DOL lacks authority to require an employer to first attempt to place a returning employee in the *same* position from which the employee commenced FMLA leave, and we do not see the utility of imposing additional notification requirements on employers when they simply exercise their statutory rights to place employees in equivalent positions. If a position to which a returning employee is placed is equivalent, the employee has no right to obtain his or her original job back. On the other hand, as an enforcement matter, we recognize that restoring an employee to the same position presents strategic advantages to employers who attempt to meet their FMLA compliance objectives in this manner, because it avoids what may often become protracted disputes with employees over the exacting ''equivalence'' standards that must be applied. It should be noted, in response to the comments from the State of Oregon's Bureau of Labor and Industries and Fisher and Phillips, an employer has an obligation to place the employee in the same or an equivalent position even where no vacancy exists. The statute does not permit an employer to replace an employee who takes FMLA leave or restructure a position and then refuse to reinstate the returning employee on the ground that no position exists. Furthermore, an employee's acceptance of a different but allegedly equivalent job does not extinguish an employee's statutory rights to be restored to a truly equivalent job or to challenge an employer's placement decision. Enforcement actions may be brought within two years after the date of the last event constituting the alleged violation, unless the violation is willful, in which case a three year statute of limitations applies. Given the complexities involved, it may well be advantageous for employers to restore returning employees to their same positions, but it cannot be a requirement of compliance in the regulations. As explained elsewhere in the regulations, if, but for being on leave, an employee would have been laid off, the employee's right to reinstatement is whatever it would have been had the employee not been on leave when the layoff occurred. Note, too, however, that it is a violation of FMLA's prohibited acts (§ 105 of the Act) for an employer to discharge or otherwise discriminate against an employee for exercising rights under the Act. Thus, it would be a prohibited act to refuse to place an employee in the same position *because* the employee had taken FMLA leave. Similarly, an employer that eliminates the job of an employee who takes FMLA leave (for example, by redistributing the work to other employees) must bear the burden of establishing that the job would have been eliminated, and the employee would not otherwise have been employed at the time of restoration, if the employee had continued to work instead of taking the leave. (See § 825.216.)

Sommer & Barnard noted the regulations did not address an employers's obligation to reinstate an employee who returns to work before

the planned expiration of the scheduled FMLA leave without advance notice to the employer, and suggested a minimum of two business days advance notice be required of the employee in such a case. (See also §§ 825.216 and 825.309.) On the one hand, an employee cannot be required to take more leave than is necessary to address the employee's FMLA need for leave (because it would not qualify as FMLA leave and, therefore, could not be charged against the employee's 12-week FMLA leave entitlement during the 12-month period). On the other hand, employees should be able to provide reasonable advance notice of changed circumstances affecting the employee's need for FMLA leave. The suggestion a minimum of two days advance notice be required has been adopted in § 825.309(c). Also, an employer may obtain such information in periodic status reports from the employee.

Wessels & Pautsch commented that employers who choose to accommodate individuals who are not protected by the ADA should not risk litigation by reinstating a returning employee to less than an equivalent position if the position offered is all that the employee can perform. They recommended that the final rule note that the right of reinstatement to the same or equivalent position is contingent upon the employee's continued ability to perform all of the essential functions of the job. (See also § 825.215.) This point has been clarified in this section.

The National Association of Temporary Services, in commenting on this section, supported adoption in the rule of a concept that temporary employees who find their spots filled upon return from leave would go to the ''head of the line'' for placement by the temporary help company under certain circumstances. There are limitations, however, in the application of this ''head of the line'' principle, because some circumstances of temporary help employment would require immediate reinstatement under FMLA. If, for legitimate business reasons unrelated to the taking of FMLA leave, the client of a temporary help company discontinues the services of the temporary help company (*i.e.*, the contract under which the employee who took FMLA leave was working has ended), or discontinues the services formerly performed by the employee who took FMLA leave, *and* there are no available equivalent temporary help jobs at the same client of the temporary help company, then the obligation of the temporary help employer is to find an equivalent temporary help job to which to restore the returning employee at another client company. If no other equivalent positions are available with other clients, *and* if the returning employee typically experienced ''waits'' between jobs in the ordinary course of his or her employment with the temporary help placement company, then such an employee would be entitled to priority consideration for the next suitable placement with other customers. On the other hand, if the client is still using agency employees in the same or equivalent positions, the agency would be required to reinstate the employee immediately, even if it would be required to remove another employee. This concept has been clarified in § 825.106 in discussing joint employment responsibilities of temporary help companies and their client firms.

The Edison Electric Institute asked if an employer is obliged to hold a position open for a ''contract'' employee employed by a contractor if the contract was originally for a period longer than the employee's FMLA leave time would consume. In the Department's view the contractor would have the responsibility as the primary employer of the employee for job restoration at the conclusion of the employee's FMLA leave, provided the primary employer chooses to place the employee in that position, rather than in an equivalent position elsewhere. If the contract employee's services are still being provided by the contractor under contract to the secondary (customer or client) employer, the primary (contractor) employer could restore the contract employee to the previous contract in the same or an equivalent position. Furthermore, if the secondary (customer or client) employer attempted to interfere with or restrain the primary (contractor) employer's attempts to restore the contract employee to his or her previous position from the start of the leave, the secondary (client or customer) employer would be in violation of the ''prohibited acts'' section of the Act and regulations (see § 825.220). These principles are discussed in § 825.106.

The College and University Personnel Association recommended that colleges and universities be permitted to maintain flexibility to place a faculty member in a temporary position without equivalent duties and responsibilities when the faculty member returns during a term, suggesting that educational institutions are unique because they work on the semester or quarter system and it disrupts students' education if a professor is brought back to teach during the term. FMLA contains no authority to grant the requested exception by regulation. The Congress addressed to some extent the special circumstances of local education agencies under § 108 of FMLA, but chose not to include colleges and universities within the scope of the special rules.

Equivalent Position (§ 825.215)

An equivalent position is one that is virtually identical to the employee's former position in terms of pay, benefits, and working conditions, including perquisites and status. This section of the regulations, which attempted to articulate the various factors that have an impact on meeting the statutory standards for ''equivalence'' under FMLA and to present interpretations through examples, generated numerous comments.

Five commenters (Federally Employed Women; Women's Legal Defense Fund; Food & Allied Service Trades; International Brotherhood of Teamsters; and Service Employees International Union) objected to the discussion in paragraph (a) of this section that appeared to use the terms ''equivalent'' and ''substantially similar'' interchangeably, and they suggested that the regulations were confusing the applicable standards. The final rule has been clarified in response to these comments. As described in the legislative history noted above, the standard for evaluating job ''equivalence'' under FMLA parallels Title VII's general prohibition against job discrimination, and is intended to be interpreted in a similar manner. ''Equivalence'' necessarily requires a correspondence to the duties and other terms, conditions and privileges of an employee's previous position, which is more than mere ''comparability'' or ''similarity.'' Moreover, the intended standard encompasses all ''terms and conditions'' of employment, not just those specified. Thus, several of these commenters objected on these grounds to the exclusion in paragraph (f) of ''perceived loss of potential for future promotional opportunities'' and ''any increased possibility of being subject to a future layoff'' from what was encompassed by ''equivalent pay, benefits and working conditions'' under FMLA. As requested by these commenters, the final rule has been clarified to indicate that an equivalent position must have the same or substantially similar duties, conditions, responsibilities, privileges and status as the original position. The references to perceived loss of potential promotions and increased possibility of future layoff have been deleted from paragraph (f).

Eight commenters (Burroughs Wellcome Company; Southern Electric International, Inc. (Troutman Sanders); California Department of Fair Employment and Housing; William M. Mercer, Inc.; Chamber of Commerce of the USA; Society for Human Resource Management; and Timber Operators Council) raised questions or concerns on the regulatory guidance on the impact of unpaid FMLA leave on various forms of incentive pay plans and bonuses (*e.g.*, perfect attendance bonuses, sales bonuses based on calendar year productivity, and pay increases based on performance reviews. Bonuses for perfect attendance and safety do not require performance by the employee but rather contemplate the absence of occurrences. To the extent an employee who takes FMLA leave meets all the qualifications to receive these types of bonuses up to the point that FMLA leave begins, the employee must continue to qualify for this entitlement upon returning from FMLA leave. In other words, the employee may not be disqualified from perfect attendance, safety, or similar bonus(es) because of the taking of FMLA leave. (*See* § 825.220 (b) and (c)). A monthly production bonus, on the other hand, does require performance by the employee. If the employee is on FMLA leave during the period for which the bonus is computed, the employee is not entitled to any greater consideration for the bonus than other employees receive while on paid or unpaid leave (as appropriate) during the period. Because restored employees are not entitled to accrue seniority during a period of FMLA leave, pay increases based on performance reviews conducted after 12 months of completed service with the employer may be delayed by the amount of unpaid FMLA leave an employee takes during the 12-month period (in the absence of policies that treat other forms of unpaid leave differently). In contrast, a pay increase based on annual performance reviews geared to an employee's ''entry on board'' anniversary date without regard to any unpaid leave taken during the period may not be denied or delayed (once the employee returns from FMLA leave) to an employee on FMLA leave on his or her anniversary date. The regulations have been clarified to include some of these principles.

Fourteen commenters (Alabama Power Company (Balch & Bingham); Pathology Medical Laboratories (Riordan & McKinzie); Department of Personnel, City of Dallas; New Hampshire Retirement System; University of California; Hill & Barlow; Morris R. Friedman; Willcox & Savage; McCready and Keene, Inc; William M. Mercer, Inc; Government Finance Officers Association; National Council on Teacher Retirement; National Restaurant Association; and Virginia Maryland Delaware Association of Electric Cooperatives) expressed various views on, and requested clarification of, provisions included in paragraph (d)(4) of this section that indicated periods of FMLA leave would be treated as ''continuous service (*i.e.*, no break in service) for purposes of vesting and eligibility to participate'' in pension and other retirement programs. To resolve the confusion created by this provision, several clarifications have been included in the final rule. Under the FMLA, *unpaid* leave does not constitute service credit—except for purposes of ''break in service'' rules because the taking of FMLA leave cannot ''* * * result in the loss of any employment benefit accrued prior to the date on which the leave commenced'' (§ 104(a)(2)). Thus, employees will not be deemed to accrue hours of service during periods of *unpaid* FMLA leave (*paid* leave *is* counted as service credit). Note, in addition, however, that if any FMLA leave is also covered by special maternity and paternity leave plan pension break in service rules under ERISA, the more generous rule would apply. Paragraph (d)(4) of this section is clarified to reflect this position.

Cincinnati Gas & Electric Company and Austin Human Resource Management Association asked that the requirement for an employee to be reinstated to the same or a ''geographically proximate'' worksite be further defined in paragraph (e)(1) of this section. In response, the rule is clarified to provide that a geographically proximate worksite is one that does not involve a significant increase in commuting time or distance.

Austin Human Resource Management Association also recommended that the rules clarify an employer's obligation to return an employee to an equivalent position following FMLA leave when the employee has medical limitations but is not a qualified individual with a disability under the ADA. An employee's right to restoration under FMLA is dependent upon the employee's ability to perform all of the essential functions of the employee's position. This is now addressed in § 825.214. (See also the discussion in § 825.702.) This commenter also suggested that the final rule expressly state that FMLA does not affect the employer's right to administer a light duty return to work program for employees off work due to injury or illness. This is an incorrect interpretation of FMLA's leave entitlement provisions and cannot be adopted in the regulations. See the discussion in § 825.702(d)(2). An employer may not require an employee to return to light duty. But the employer is not prohibited from providing a program under which an employee could voluntarily return to duty before he or she is able to perform all the essential functions of the job. In such a case, because an employee cannot waive his or her FMLA rights, the employee's right to be restored to his or her original or an equivalent position would continue until 12 weeks have passed in that 12-month period, including all FMLA leave and the light duty period for which the employee would otherwise have been on leave. *See* the revisions at §§ 825.220 and 825.702.

College and University Personnel Association commented that § 825.215(d)(2) appeared to prohibit employers from applying ''use it or lose it'' policies because an employee who takes FMLA leave is entitled to the same benefits upon return from leave as he/she was entitled to at the commencement of the leave, regardless of whether the ''use it or lose it'' date has passed. The commenter considered this interpretation inconsistent with § 825.216, which suggests an employee has no greater right to benefits than if the employee had been continuously employed during the FMLA leave. The commenter is correct that the FMLA extends no greater right or benefit to eligible employees than they would receive if they worked continuously during the FMLA leave. Consistent with this provision, if an employee would have ''lost'' the benefit if the employee had been continuously employed instead of taking FMLA leave, the employee is not entitled to ''retain'' the benefit simply because the employee took FMLA leave, regardless of whether the trigger date for ''losing it'' occurs during a period the employee is on FMLA leave.

The National Association of Plumbing-Heating-Cooling Contractors commented that for union-affiliated employers under a collective bargaining agreement, an eligible employee who requests FMLA leave will be replaced from the hiring hall. According to the commenter, the employer has no authority to recall a worker back to his or her original position at the end of the leave. As noted in § 825.700 of these regulations and § 402 of the FMLA, the rights established for eligible employees by FMLA may not be diminished by any collective bargaining agreement or any employment benefit program or plan.

An employer under the circumstance described by this commenter would still be required to reinstate the eligible employee to the same or an equivalent position.

Limitations on Employer's Obligation to Reinstate (§ 825.216)

Section 104(a)(3) of FMLA limits the entitlement of any restored employee to no greater right, benefit, or position of employment than any right, benefit, or position of employment to which the employee would have been entitled had the employee not taken the leave. An employer must demonstrate that the employee would not otherwise have been employed when reinstatement is requested to be able to deny restoring the employee (for example, in the case of a department-wide layoff affecting the employee's former position). Similarly, if a shift has been eliminated or overtime work has decreased, a returning employee would not be entitled to return to that shift or to work the same overtime hours as before. In addition, an employer may deny reinstatement to an eligible ''key'' employee if such reinstatement would cause substantial and grievous economic injury to the employer's operations and if the employer has complied with all the provisions of § 825.217; and, an employer may delay reinstatement of an employee who fails to furnish a fitness for duty certificate on return to work in the circumstances described in § 825.310, until the certificate is furnished.

The National Association of Computer Consultant Business commented that while this section referred to the task of the project being completed while an employee is on FMLA leave and the loss of reinstatement rights in that instance, it did not refer to other similar limitations, such as where a position is eliminated or resubcontracted. The same principles would apply in these other instances where the position of employment no longer exists and the change occurs during an employee's FMLA leave. An employee's rights to be restored are the same as if the employee had not taken the leave. The employer must establish that the employee who seeks reinstatement would not otherwise have been employed if leave had not been taken in order to deny reinstatement. See also § 825.312(d).

Employers Association of New Jersey asked, where an employee would have been laid off during a period of FMLA leave, at what point does the leave end and the employee's entitlement to maintenance of group health benefits cease? Or, where the employer makes a bona fide determination that, because of reduced workforce requirements, the services of the employee on FMLA leave will no longer be required? Similarly, Alabama Power Company (Balch & Bingham) requested more guidance be given on department-wide downsizing while an employee is on leave—must the employee still be kept on leave for the remainder of the planned FMLA leave if he or she would have been permanently laid off when the downsizing occurred? Fisher and Phillips also suggested the regulations clarify that an eligible employee's rights to group health plan benefits end after the date of a layoff affecting an employee on FMLA leave. The National Restaurant Association suggested that it would be helpful if more examples were included of circumstances where an employee's rights to job restoration and maintenance of health benefits are limited.

As explained in several sections of the regulations, an eligible employee under FMLA is entitled to no greater right of employment than if leave had not been taken. The legislative history points out that if, but for being on leave, an employee would have been laid off, the employee's right to reinstatement is whatever it would have been had the employee not been on leave at the time of the layoff. Thus, if an employee is laid off during an FMLA leave period, the employer's obligations to continue the employee on FMLA leave, maintain the employee's group health plan benefits, and restore the employee to a position of employment, all cease at the time the employee is laid off *provided* the employer has no such obligation under a collective bargaining agreement or otherwise, and the employer can demonstrate that the employee would not have been reinstated, reassigned, or transferred in the absence of the FMLA leave. This section has been so clarified. Note, too, however, an employer is prohibited from discharging or otherwise discriminating against an employee for exercising rights under the Act, and the employer that eliminates the job of an employee who takes FMLA leave (for example, by redistributing the work to other employees) bears the burden of establishing that the job would have been eliminated, and the employee would not otherwise have been employed by the employer, if the employee had continued to work instead of taking the leave. (See also the discussion of § 825.214, above.)

Employers Association of New Jersey also asked whether an employer is obligated to reinstate an employee if, during the leave, the employee engaged in conduct which would have resulted in discharge if the conduct occurred while the employee was at work. If no such obligation exists, may the FMLA leave and maintenance of group health insurance be discontinued at the point in time that the misconduct took place? Again, an employee on FMLA leave is entitled to no greater right of employment than if the leave was not taken. Provided the employer's policies are nondiscriminatory, are applied uniformly to similarly-situated employees, and violate no other laws, regulations, or collective bargaining agreements where applicable, sanctions such as discharge for misconduct may continue to be applied to the employee on FMLA leave for actionable offenses as if the employee had continued to work.

''Key'' Employee Exemption (§ 825.217)

FMLA provides a limited exemption from an employer's requirement to restore an employee to employment after FMLA leave if certain factors are met: (1) denial of restoration to employment (but not the taking of the leave) must be necessary to prevent ''substantial and grievous economic injury'' to the employer's operations; (2) the employer must notify the employee of its intent to deny restoration under this exemption at the time the employer determines that such grievous economic injury would occur; (3) if the leave has already commenced, the employer must allow the employee an opportunity to elect to return to work after receiving the notice from the employer; and (4) the exemption is limited to a salaried eligible employee who is among the highest paid 10 percent of the employer's workforce within 75 miles of the facility where employed. These provisions are statutory, as set forth in § 104(b) of FMLA.

Several commenters suggested changes that would be inconsistent with the statutory terms of the exemption, such as increase the ''top 10 percent'' to ''top 25 percent'' or decrease it to ''top five percent,'' or guarantee reinstatement rights to women who have achieved the top 10 percent status despite the terms of the exemption, or limit applicability of the exemption to private sector employers only. The Department cannot adopt regulatory provisions for the exemption that would run counter to the terms of the statute.

The National Association of Plumbing-Heating-Cooling Contractors questioned whether key employees had to be notified of their designation as ''key'' prior to requesting FMLA leave, suggesting that employers should be required to do this to prevent misunderstandings and abuses (*e.g.*, at the time of being hired). Under the

terms of the statute, the employer must notify an employee ''at the time the employer determines'' that the requisite injury from restoration would occur. Under § 825.217(c)(2), the determination of whether a salaried employee is among the top 10 percent for purposes of the exemption is made at the time of a request for leave. Under the ''notice to employee'' provisions of § 825.301(c)(6), the employer must inform a ''key'' employee in response to a request for leave whether the employee is a ''key'' employee, and the potential consequence that restoration may be denied following the leave. As provided under § 825.219, if an employer believes reinstatement may be denied, such written notice must be provided to the employee at the time of the leave request, or when the FMLA leave commences, whichever is earlier. Failure to provide timely notice that the employee is a key employee and restoration may be denied will cause employers to lose their right to deny restoration, even where substantial and grievous economic injury will result from restoring the employee.

The Society for Human Resource Management asked whether overtime is included when computing the highest paid 10 percent of the workforce, and how the determination is made when there is a parent company and a subsidiary involved. As detailed in § 825.217(c)(1), the earnings used for this computation include wages (which includes salaries), premium pay (which includes ''overtime'' premium pay), incentive pay (*e.g.*, commissions), and non-discretionary and discretionary bonuses. The definition of ''employer'' in § 825.104 would control in cases involving a parent and subsidiary. As provided in § 825.104(c), normally the legal entity which employs the employees is the employer, and a corporation is a single employer (rather than its separate establishments or divisions). Where one corporation has an ownership interest in another, it is a separate employer *unless* it meets the tests for ''integrated employer'' (§ 825.104(c)(2)), in which case all employees of the integrated employer are considered.

Substantial and Grievous Economic Injury (§ 825.218)

To deny restoration to a ''key'' employee, the employer must establish that restoring the employee would cause ''substantial and grievous economic injury'' to the employer's operations. In explaining the conditions for applying the ''key'' employee exemption, the legislative history indicated, when measuring grievous economic harm, ''* * * a factor to be considered is the cost of losing a key employee if the employee chooses to take the leave, notwithstanding the determination that restoration will be denied.'' Numerous commenters (Chicago Transit Authority; Nationsbank Corporation (Troutman Sanders) and Southern Electric International, Inc (Troutman Sanders); Pima Federal Credit Union; United Federal Credit Union; Weinberg & Green; Wessels & Pautsch; Willcox & Savage; Credit Union National Association, Inc; National Association of Federal Credit Unions; and the National Restaurant Association) requested more specific guidelines and further regulatory definition of the statutory term ''substantial and grievous economic injury.'' One commenter (IBM Endicott/Owego Employees Federal Credit Union) suggested further guidance was unnecessary. The National Association of Federal Credit Unions noted additionally that under the ADA, an employer's operations suffer an ''undue hardship'' if accommodation to an employee would be unduly costly, extensive, substantial, or disruptive or would fundamentally alter the nature or operation of the business. This commenter suggested these same factors under ADA could be applied in determining whether or not an employer's operations would suffer ''substantial and grievous economic injury'' by restoring a key employee to the position. The EEOC, on the other hand, which administers the ADA, recommended that the FMLA rules state that FMLA's standard for the ''key'' employee exemption is *different* from ''undue hardship'' under the ADA. The Department concurs with EEOC's suggestion that ''substantial and grievous economic injury'' under FMLA is different from ''undue hardship'' under the ADA. FMLA creates a narrow exception to the reinstatement rights of a key employee, whereas ADA's standard provides a measure of the reasonableness of any accommodation. Additionally, the definitions of the two terms suggest that ''substantial and grievous economic injury'' is more stringent than ''undue hardship.'' The FMLA rules define ''substantial and grievous economic injury'' to include ''substantial long-term injury.'' Undue hardship is defined as ''significant difficulty or expense'' (*see* Appendix to 29 CFR Part 1630.2(p)). Accordingly, the final rule is revised to clarify that the two standards are, in fact, different, and that FMLA's standard is more stringent than the ADA's ''undue hardship'' standard. Further regulatory guidelines, however, in the form of a more precise test, cannot be established due to the fact-specific circumstances that must be evaluated on a case-by-case basis.

Rights of a Key Employee (§ 825.219)

This section detailed the guidelines for applying the ''key'' employee exemption, and the requirements for employers to furnish proper and timely notice to ''key'' employees, informing them of the possibility that restoration to employment may be denied. A ''key'' employee must be given a reasonable period of time after receiving the employer's notice in which to elect whether to return to work. A key employee who takes leave is still eligible for maintenance of group health benefits, even after the employee has been notified that reinstatement will be denied. In those circumstances, the employer may not recover the premiums it paid to maintain such health benefits. An employee who continues on leave after receiving notice from the employer is still entitled to request reinstatement at the conclusion of the leave period, and the employer must again determine if substantial and grievous economic injury will result from reinstatement based on the facts existing *at that time*.

TRW Systems Federal Credit Union, Fisher & Phillips, and the National Restaurant Association considered the requirements to give written notices to key employees as provided in the regulations to be excessive and duplicative. The National Association of Federal Credit Unions opposed the requirement for a second determination to be made, after a key employee has already chosen to continue the leave after receiving the employer's first notice that restoration will be denied. The Chamber of Commerce recommended that the regulations require written notice but not mandate a specific form of delivery (either in person or by certified mail). The National Restaurant Association considered the obligations of the employer to be so burdensome under the regulations as to render the exception under the Act of no practical value.

After full consideration given to the comments received on this section, the Department continues to believe that the rule properly construes the rights intended by the Act for ''key'' employees; thus, no further modifications have been made in response to the comments. Section 104(b) of FMLA is intended as a narrow, limited exemption from the otherwise applicable restoration requirements of the Act. The procedural requirements set forth in the rule ensure that the standards for the exemption have been

properly met, *i.e.*, based on facts existing at the time an employee seeks restoration to employment, the employer must establish that denial of restoration *at that time* is necessary to prevent substantial and grievous economic injury to the employer's operations.

Employee Protections and Prohibited Acts (§ 825.220)

Section 105 of FMLA makes it unlawful for an employer to interfere with or restrain or deny the exercise of any right provided by the Act. It also makes it unlawful for an employer to discharge or in any other manner discriminate against any individual for opposing any practice made unlawful by the Act. This opposition clause is derived from Title VII of the Civil Rights Act of 1964 and is intended, according to the legislative history, to be construed in the same manner. Thus, FMLA provides the same sorts of protections to workers who oppose, protest, or attempt to correct alleged violations of the FMLA as are provided to workers under Title VII. The regulations provided that any violation of the FMLA or its implementing regulations would constitute interfering with, restraining, or denying the exercise of rights under the Act. ''Interfering with'' the exercise of rights was defined to include not only denying authorization for or discouraging an employee to take FMLA leave, but manipulation by the employer to avoid responsibilities (such as unnecessarily transferring employees among worksites to avoid the 50-employee threshold for employees' eligibility). FMLA's anti-discrimination provisions were interpreted in the Interim Final Rule to prohibit an employer from requiring more of an employee who took FMLA leave than the employer requires of employees who take other forms of paid or unpaid leave (*e.g.*, requirements to furnish written notice or certification for use of leave). Also, employers were prohibited from considering an employee's use of FMLA leave as a negative factor in any employment actions (*e.g.*, promotions or discipline), and specifically in connection with ''no fault'' attendance policies. Finally, the regulations expressed DOL's view that employees cannot waive their rights under FMLA, nor can employers induce employees to waive their FMLA rights.

Ten commenters (Consolidated Edison Company of New York, Inc.; Dopaco, Inc.; Red Dot Corporation; Tax Collector, Palm Beach County, Florida; Austin Human Resource Management Association; Equal Employment Advisory Council; Florida Citrus Mutual; Food Marketing Institute; Greater Cincinnati Chamber of Commerce (Taft Stettinius Hollister); and the Society for Human Resource Management) opposed the prohibitions against counting FMLA-protected leaves of absence in disciplinary actions and under employers' attendance control policies. Some felt that FMLA should not invalidate legitimate attendance control programs, which are objective and nondiscriminatory as to the reason for a given absence, or that reasonable attendance requirements should still be available to employers and remain within their prerogatives as a condition of continued employment. Some asked whether a distinction could be made between counting FMLA absences negatively for purposes of discipline or other adverse action, and counting them under attendance programs that reward employees for good attendance (*e.g.*, attendance *bonus* programs). It was argued that employers should still be allowed to reward employees positively for perfect attendance, and be permitted to exclude an employee from such an attendance award if the employee's FMLA absence makes him or her ineligible.

Employers pay bonuses in different forms to employees for job-related performance such as for perfect attendance, safety (absence of injuries or accidents on the job), and exceeding production goals. Bonuses for perfect attendance and safety do not require performance by the employee, but rather contemplate the absence of occurrences. To the extent an employee who takes FMLA leave meets all the requirements for these types of bonuses (which contemplate the absence of an event) before the FMLA leave begins, the employee is entitled to continue this accrued entitlement upon the employee's return from FMLA leave (the taking of FMLA leave cannot ''* * * result in the loss of any employment benefit accrued prior to the date on which the leave commenced''). Thus, the employee may not be disqualified for such bonus(es) merely because the employee took FMLA leave during the period; to do so would discriminate against the employee for taking FMLA leave. A monthly production bonus, on the other hand, does require performance by the employee during the period of production. If the employee is on FMLA leave during the period for which the bonus is computed, the employee may be excluded from consideration for the bonus. These principles are discussed in new § 825.215(c)(2).

Nationsbank Corporation (Troutman Sanders) observed that the courts in recent years have found that some employees have abused or illegitimately sought the protection of anti-discrimination statutes to avoid legitimate discipline, and that the courts and some administrative agencies (including DOL) have developed decision rules to bar such use of the law by employees. The commenter recommended that DOL explicitly prohibit employee abuse or misuse of FMLA and include sanctions for such misconduct (*e.g.*, discharge, payment of attorneys' fees or other costs).

Sections 825.216 and 825.312 discuss at some length, as noted repeatedly throughout this preamble, that FMLA does not entitle any employee to any right, benefit, or position of employment other than any right, benefit, or position of employment to which the employee would have been entitled if the employee had not taken leave under the FMLA. Thus, FMLA cannot be used by employees as a ''shield'' to avoid legitimate discipline. As this basic tenet flows from FMLA's statutory provisions which have already been addressed in the regulations, it is unnecessary to include the particular suggested provisions to respond to these concerns.

Nationsbank Corporation (Troutman Sanders), Southern Electric International, Inc (Troutman Sanders), and Chamber of Commerce of the USA expressed concerns with the ''no waiver of rights'' provisions included in paragraph (d) of this section. They recommended explicit allowance of waivers and releases in connection with settlement of FMLA claims and as part of a severance package (as allowed under Title VII and ADEA claims, for example). The ERISA Industry Committee raised a similar concern with respect to the rule's impact on early retirement windows offered by employers. Such windows are typically open for a limited period of time and require all employees accepting the offer to be off the payroll by a certain date. If employees on FMLA leave have the right to participate in an early retirement program, but may continue to have and assert leave rights, the leave rights could adversely affect administration of the early retirement program.

The Department has given careful consideration to the comments received on this section and has concluded that prohibitions against employees waiving their rights and employers inducing employees to waive their rights constitute sound public policy under the FMLA, as is also the case under other labor standards statutes such as the FLSA. This does not prevent an individual employee on unpaid leave

from returning to work quickly by accepting a ''light duty'' or different assignment. Accordingly, the final rule is revised to allow for an employee's voluntary and uncoerced acceptance of a ''light duty'' assignment. An employee's right to restoration to the same or an equivalent position would continue until 12 weeks have passed, including all periods of FMLA leave and the ''light duty'' period. In this connection, see also § 825.702(d).

With respect to early-out windows for retirement purposes, an employee on FMLA leave may be required to give up his or her remaining FMLA leave entitlement to take an early-out offer from the employer. Under these circumstances, FMLA rights would cease because the employment relationship ceases, and the employee would not otherwise have continued employment. Further, although an employer need not extend the window for those employees who are out on FMLA leave, the employer must afford such employees the opportunity to avail themselves of any such offer which would have been available if they had not been on leave.

Florida Citrus Mutual and Fisher & Phillips took issue with the prohibition against an employer manipulating the size of the workforce for the purpose of precluding employee eligibility for FMLA leave. They suggested that employers cannot ''interfere'' with the rights of employees unless and until the employees have those rights.

We disagree with the views expressed in these comments. It is DOL's view that a *covered* employer that engages in the manipulative behavior prohibited by the regulatory provisions is depriving employees of rights and entitlements they would otherwise fully enjoy *but for* the manipulative actions by the covered employer, which is expressly prohibited. The rule is clarified to state that employers *covered by the FMLA* may not engage in such manipulation of the workforce for the purpose of avoiding FMLA obligations.

The California Department of Fair Employment and Housing recommended revisions to paragraph (c) of this section to reference the consequences of an employer asking a job applicant or the former employer of a job applicant questions which would reveal the employee's use of FMLA leave, and the consequences of making hiring decisions based on the use of FMLA leave. It was suggested that if hiring decisions are among the employment actions for which use of FMLA leave may not be a negative factor, then the regulations should incorporate guidance in this area. A reference to ''prospective employees'' has been included in paragraph (c) of this section.

III. Subpart C, §§ 825.300–825.312

Posting Requirements (§ 825.300)

Twenty commenters took exception to the regulatory requirement regarding the size of the notice (poster). They felt it was unnecessary and did not provide any substantive benefit to employees.

The Department has determined that it will not prescribe the precise size of the required poster. The regulation requires instead that the poster be large enough to be easily read. This requirement would be satisfied, for example, if the poster were at least the size of a standard 8½×11 inch piece of paper. The purpose of the poster is to call employees' attention to the basic requirements of FMLA and provide information where they may get additional information or file a complaint. In the past several years a number of commercial firms have reproduced other posters, having a number of posters in a single set or on a single display, and much of the information is not legible from any reasonable distance. If the poster does not inform, it serves no useful purpose.

Two commenters objected to having a provision in the regulation that allowed employees to circumvent their notice obligations to the employer if the employer failed to post the notice. The purpose of this provision is to encourage employers to post the notice; otherwise, how would employees know about FMLA and their basic rights and where to obtain additional information? The posting requirement is not difficult or overly burdensome for an employer, as the Department will furnish, free of charge, a copy of the poster which the employer may duplicate. The Department finds no basis to remove this provision from the Final Rule.

The Employers Association of Western Massachusetts, Inc., commented that references to applicants for employment should be deleted from the regulation as the statute applies only to eligible employees.

The statute, at § 109(a), requires the notice to be posted in conspicuous places on the premises where notices to employees and *applicants for employment* are customarily posted. The prohibited acts identified by the statute in § 105 state that it is unlawful for an employer and/or any person to interfere with rights or discriminate *against any individual.* Clearly the prohibited acts are not limited in application to eligible employees. The Department is unable to make this change as it conflicts with the statutory language.

The Society for Human Resources Management asked if a contractor who has employees working at multiple sites of other employers is required to post the notice at each site when the employer who controls the site has already posted the notice. The contractor should ensure that a notice is posted in a conspicuous place on the worksite where his/her employees have access. If so, there is no need for the contractor to post additional notices.

The Tennessee Association of Business asked if posting the notice satisfies all notice requirements of the Act. The posting of the notice is but one of the notice requirements applicable to employers. For example, in § 825.301(b) the employer is required to provide written notice to an employee who provides notice of the need for FMLA leave regarding eight essential elements of information that are employee-specific. There are a number of other notice provisions throughout the regulations.

Other Employer Notices (§ 825.301)

Four commenters made observations regarding the requirements of § 825.301(a) for employers to include their policies regarding the taking of FMLA leave in employee handbooks, if they have such a publication. One commenter asked for the deadline by which the FMLA provisions should be included. Another objected to any requirement to include the process to file a complaint and advising employees of their right to file suit. Yet another urged the Department to provide an acceptable statement to be included in the employee handbook regarding FMLA. One commenter urged that this requirement be satisfied if the employer incorporated the Department's FMLA Fact Sheet in the handbook.

It was the intent of the regulations that if an employer provides a handbook of employer policies, the employer's FMLA policies would be included in the handbook by the effective date of FMLA. There is no requirement that an employer include information regarding filing complaints or private rights of action. The purpose of this provision is to provide employees the opportunity to learn from their employers of the manner in which that employer intends to implement FMLA and what company policies and procedures are applicable so that employees may make FMLA plans fully aware of their rights and obligations. It was anticipated that to some large degree these policies would be peculiar to that employer. Consequently, it would be of little use

to incorporate the Department's Fact Sheet or a Departmental statement in the employer's handbook for employees.

Seven commenters stated that the notice requirements in § 825.301(c) are burdensome, not required by the statute and should be deleted from the regulations. One commenter urged that the notice required by this section should include the consequences of employees failing to give 30 days notice when leave is foreseeable. Three additional commenters urged there be one generic notice applicable to all employees except key employees.

The intent of this notice requirement is to insure employees receive the information necessary to enable them to take FMLA leave. The employee is entitled to know the arrangements for payment of health insurance premiums reached by agreement with the employer, whether the employee will be required to provide medical certification for leave or fitness to return to duty, *etc.* It would be inappropriate to use a generic notice as much of the information may be employee specific, particularly the arrangements for payment of insurance co-payments. The regulation suggests employers provide information to employees regarding consequences of inaction. There is nothing in the regulation that precludes the employer from providing more information than required, only from providing less. The Department finds no basis to change the requirements of this notice provision.

Three commenters objected to a requirement that a notice be provided each time an employee takes leave, especially when the employee is taking leave intermittently.

The regulation has been amended to provide that in most circumstances notice need only be given once in each six- month period, on the occasion of the first employee notice of the need for leave. However, if the specific information required to be furnished in the notice changes, notice of the changed information must be provided in response to a subsequent notice of need for leave. In addition, an employer will be required to give notice of a requirement for medical certification, or for a ''fitness-for-duty'' report upon the employee's return to work, each time the employer receives notice of a need for FMLA-qualifying leave. An exception will exist, however, if the notice given at the beginning of the six-month period, as well as any employee handbooks or other written documents regarding the employer's leave policies, make it clear that medical certification or a ''fitness-for-duty'' report will be required under the circumstances of the employee's leave. For example, the prior notice and handbook (if any) might state that certification will be required for all sick leave of any kind, for all unpaid sick leave, or for all sick leave longer than a specified period. Similarly, the notice and handbook might state that ''fitness-for-duty'' reports will be required for all employees with back injuries in a certain occupation.

The Women Employed Institute urged that the notice required by § 825.301(c) be in writing and that the notice should be furnished to the employee no later than the day before leave is to begin if leave is foreseeable or as soon as practicable if not foreseen.

The regulation has been changed to make it clear that the notice must be in writing. The interim final rule required the employer to provide the notice *at the time notice of need for leave is provided.* The Final Rule will require such notice to be provided as soon after notice of need for leave is given as practicable, usually one or two business days. The requirement for written notice simply ensures that the employee receives critical information and provides appropriate documentation of the information conveyed to the employee in the event of a dispute.

The Church of Jesus Christ of Latter-Day Saints commented that an employer should still be permitted to count an absence as FMLA leave even if an employee (who may be too ill) has not requested FMLA leave for the absence. An example was provided of an employee who has a heart attack and misses five weeks from work but does not request FMLA leave. The Church further observes that providing the employee with the required notice when the employee is so ill would be uncaring.

The regulations have been revised to permit the employer to mail the notice to the employee's address of record if leave has already begun. The regulations also provide that notice of need for leave may be given by the employee's spokesperson, (*e.g.*, spouse, adult relative, attorney, doctor).

The California Department of Fair Employment and Housing comments that the regulations should be more specific regarding the obligations of covered employers who have no eligible employees. Section 825.500 of the Final Rule has been revised to specify the obligations of covered employers who have no eligible employees.

The regulation has also been revised to make it clear that if an employer fails to provide the required information, it may not take action against an employee for failure to comply with the employee's obligations required to be set forth in the notice.

Employee Notices (to Employers) When Leave is Foreseeable (§ 825.302)

Four commenters suggested that it be made clear that the employee is required to give notice of need for FMLA leave to the employee's supervisor or other appropriate person, and need not make the request to some top official of the company.

The employee is required to provide notice of need to take FMLA leave to the same person(s) within the company the employee ordinarily contacts to request other forms of leave, usually the employee's supervisor. It is the responsibility of the supervisor either to refer the employee who needs FMLA leave to the appropriate person, or to alert that person to the employee's notice. Once the employee has provided notice to the supervisor or other appropriate person in the usual manner, the employee's obligation to provide notice of the need for FMLA leave has been fulfilled.

The Nationsbank Corporation requested guidance as to the circumstances in which an employer may choose to waive notice requirements. Throughout the regulations, reference is made to the employer's ability to waive notice and certification requirements. As long as the employer's discretion is applied in a nondiscriminatory manner, the employer will have complied with these requirements.

Fisher and Phillips observed that the regulations do not address the employee's obligation to provide notice of any needed extension to leave already requested and underway. Sommer and Barnard also took issue with the notice requirements regarding an extension of leave, and suggested that the regulations should be amended to provide that an employee on FMLA leave who fails to report to work at the expiration of the leave and fails to give FMLA notice of the need for extension of the leave prior to its expiration shall not be entitled to the job restoration protections of the Act or the regulations, unless it was impossible to give such notice prior to expiration of the leave and the employee thereafter gives the earliest and best notice possible. The regulation has been amended in § 825.309(c) to provide that an employee shall advise the employer if leave needs to be extended. In addition, the employer may obtain such information from employees through status reports.

Section 825.302(g) has also been revised to clarify employee notice obligations when the employer's paid

leave plan contains lesser obligations and paid leave is substituted for unpaid FMLA leave. An employer may not impose FMLA's stricter notice requirements if the employer's applicable leave plan allows less advance notice for the type of leave being substituted. See, also, § 825.207(h).

The Department also notes that the regulations continue to provide that although an employee is only required by FMLA to give oral notice of the need for leave, an employer may require an employee to comply with its usual and customary notice requirements, including a requirement of written notice. If an employee fails to give written notice in these circumstances, an employer may not deny or delay leave, but may take appropriate disciplinary action.

Employee Notices (to Employer) When Leave is *Not* Foreseeable (§ 825.303)

The Women's Legal Defense Fund suggested that section (a) be amended to reflect that an employee may not be foreclosed from beginning leave even if one or two days' notice is not possible. The final rule has been amended to include guidance that notice should be given as soon as practicable.

Two commenters indicated that verbal notice is not sufficient and the employer should be permitted to require a written notice, requesting leave and providing a general reason for the leave if FMLA. They suggested that if an employee needs to request the leave in an emergency, oral notice should be sufficient but only if the employee confirms that request in writing within two working days.

Nothing in the regulations prohibits an employer from requiring written notice to take or request leave if this is the employer's usual procedure. The employer may request written notice for all leave. The employer, however, may not deny or delay FMLA-qualifying leave when the employee provides verbal notice as soon as practicable. Having a hard and fast rule that the employee must give written notice or confirm the verbal notification within one or two working days would work an unnecessary hardship on many employees who have taken leave for a medical emergency and are not in a position to provide written notice either due to their own serious health condition, or that of an immediate family member.

Employer's Recourse When Employee Fails To Provide Notice (§ 825.304)

Seven commenters provided observations regarding this section. Four of the commenters urged that an employer not be permitted to *deny* leave under any circumstances when the employee fails to provide adequate notice, but only delay the leave. They further stated that the employer should be permitted to delay the leave only if the employer can show that the activities of the business were prejudiced by the employee's failure to provide adequate notice. They questioned the extent of an employer's right to take disciplinary action in the event adequate notice is not provided and urged that the employer be prohibited from denying leave or discharging the employee for inadequate notice. One commenter asked for a definition of the term *as soon as practicable.*

Section 102(e) of the statute sets out obligations of the employee to provide notice to the employer of the need to take leave in both foreseeable and unforeseeable circumstances. As this is an affirmative responsibility of the employee it would be inappropriate to require the employer to show any prejudice resulting from an employee's failure to provide adequate notice. As used in the regulation, as soon as practicable is further explained as within one or two business days unless that is not feasible. The regulation is revised to provide that an employer may delay (rather than deny) leave where required notice has not been given.

Medical Certification of Serious Health Conditions (§ 825.305)

The Community Legal Services, Inc. commented that low income workers may be unable to persuade health care providers to provide medical certifications. They urge an exception for such workers if obtaining the certification is not practicable under the particular circumstances despite the employee's diligent, good faith efforts, and a similar exception that would excuse a person's inability to produce a certification or all the information requested by the employer because of non-cooperation by the health care provider. If an employee under these circumstances is unable to provide a complete certification, the employer could request a second opinion at the employer's expense, they suggest. Further, any employer that requires a certification should provide a copy to the employee.

The provision for medical certification at the request of the employer is a basic qualification for FMLA leave. It is the employee's responsibility to provide such certification. The Final Rule has been amended in § 825.311(b) to provide that if an employee never produces the requested certification, the leave is not FMLA leave. It is the employee's responsibility to find a health care provider that will provide a complete certification. As the employee is providing the certification to the employer, if the employee wishes to have a copy he/she may make a copy before submission to the employer. The regulation has been amended to provide for copies of a second or third opinion to be provided by the employer to the employee upon the employee's request.

Eight commenters observed that providing a minimum of 15 days for the employee to provide medical certification is unreasonable. In some cases the certification would not be provided until the leave is over if the leave is only for a short period of time, and the employee would have returned to work, thereby denying the employer the opportunity to obtain second and third opinions where appropriate and designating the leave as FMLA leave after the employee has returned to work. Several alternatives were proposed, from allowing the employer to define an acceptable time frame to allowing only one week to provide the certification.

The regulations have been amended in § 825.305(a)(2) to track the statute more closely. Ordinarily, when leave is foreseeable and at least 30 days notice has been provided, the employee should provide the medical certification before the commencement of leave. If the need for leave does not allow for this, the employee should provide the certification within the time frames established by the employer for submission of the certification, which must allow at least 15 days after the employer's request. Section 825.208 of the regulations has been amended to enable the employer to make a preliminary designation of leave when the certification was not provided prior to the commencement of leave, or the employer is awaiting a second or third opinion, and to confirm or withdraw the designation depending upon the results of the medical opinions even though the employee has returned to work. The Department believes that the requirement to provide the certification in no less than 15 days is reasonable as the employee has no control over the timing of the health care provider's completion of the certification form.

Two law firms, Fisher and Phillips and Sommer and Barnard, observed the regulations are silent regarding time frames for submission of recertifications. Section 825.308 has been amended to clarify that recertifications are subject to the same

15-day time frames as the original certification.

Section 825.305(e) has also been revised to clarify the certification requirements when the employer's paid leave plan contains lesser obligations and paid leave is substituted for unpaid FMLA leave. If the employer's sick or medical leave plan contains less stringent certification requirements than those of FMLA, and paid sick, vacation, personal or family leave is substituted for unpaid FMLA leave as provided in § 825.207, only the employer's less stringent sick leave certification requirements may be imposed. See, also, § 825.207(h).

Information Required in Medical Certifications (§ 825.306)

Ten commenters questioned the necessity for the health care provider to provide a diagnosis when providing a medical certification of the existence of a serious health condition, and suggested that providing appropriate medical facts is sufficient for this purpose. The Women's Legal Defense Fund comments were reasonably representative of these commenters. They observed that the optional certification form provides more information to the employer than statutorily required (for example, diagnosis and regimen of treatment), and that inquiries regarding such matters may be a violation of the ADA. They noted that health care providers may be reluctant to provide detailed medical information due to ethical and privacy concerns, and expressed concerns regarding confidentiality and employee waivers. They recommended that the form include space for an employee signature which would provide a limited waiver from the employee to release the information to the employer for purposes of FMLA leave only.

Other commenters questioned the absence of a box to check on the form to indicate that an employee has been prescribed medicine, an indication of continuing treatment under the Interim Final Rule. The Hyman Construction Co. observed that it would be helpful if the form provided space for the health care provider's address and telephone number. Still others wanted the health care provider's Employer Identification Number and Social Security Number.

After a review of these comments, and significant revisions to the definition of ''serious health condition'' in § 825.114 of the regulations, this section and Form WH–380 have been completely revised. In general, the purpose of the revisions is to allow employers to obtain information from a health care provider to verify that an employee in fact has a serious health condition, and the likely periods of absence by the employee, but no unnecessary information. The form has been revised, for example, to require certification as to which aspect of the definition applies, and to state the medical facts to support the definition. The regulation and form no longer provide for diagnosis, and make clear, consistent with the ADA and privacy concerns, that all information on the form relates only to the condition for which the employee is taking FMLA leave. However, it is considered necessary to include information regarding the regimen of treatment in general terms (*e.g.*, prescription drugs) since this is one of the specific requirements of a serious health condition under § 825.114(a)(2)(i)(B).

The suggestion that the health care provider be required to furnish an Employer Identification Number and/or Social Security Number has not been adopted. The optional medical certification form is not a substitute for an insurance claims form; its use is intended for purposes of confirming the existence of a serious health condition, and thus the need for FMLA leave. The information provided by the form is required to be kept confidential by the employer and it would be inappropriate for the employer to place this form into the ordinary business process for insurance claims.

The Department has not adopted the suggestion that a waiver by the employee is necessary for FMLA purposes. The process provides for the health care provider to release the information to the patient (employee or family member). The employee then releases the information (form) to the employer. There should be no concern regarding ethical or confidential considerations, as the health care provider's release is to the patient. The employee may choose to withhold the certification from the employer. In so doing, however, the opportunity to take FMLA leave is sacrificed, but that would be the employee's decision. In the more than 12 months that have elapsed since the Interim Final Rule became effective, the Department has received no feedback that the absence of an employee waiver on the optional medical certification form has created any difficulty for the health care community, employers, or employees.

The Equal Employment Opportunity Commission provided comments regarding the medical certification process. EEOC suggested that questions 5 and 6 of the form are too broad. Question 5 asks for the probable duration of a condition. EEOC recommended the question be revised to ask the probable duration of the condition for which the leave is requested, and suggested Question 6 is overly broad for the same reason, *i.e.*, asking about the regimen of treatment to be prescribed. Question 5 has been revised. Question 6 has not been deleted because the information is necessary to determine if a serious health condition exists. However, the form makes clear that all information relates to the condition for which leave is needed.

The Burroughs Wellcome Company and Joan L. Kalafatas observed that sometimes employers need other medical information for purposes other than FMLA leave, and suggested that the FMLA regulations indicate that other information may be requested although it may not be used to make decisions required under FMLA. The Department disagrees with this comment. If the employer needs medical information for some other purpose, the employer needs to make an additional, perhaps simultaneous, request.

Massmutual Life Insurance Company recommends an employer with a paid leave program be allowed to use a single certification form for FMLA and paid leave purposes, asking that the form be permitted to include information in addition to that identified by the FMLA regulations only if the additional information would be used to verify eligibility for paid leave. It would not be appropriate to permit employers to request additional medical information to support an employee's desire to substitute accrued paid leave for FMLA leave. The regulations provide that any such requirements may not be more stringent than those required by FMLA. If the commenter is referring to eligibility for *benefit plans* rather than paid leave, the Department has included a provision in the Final Rule that if an employee must meet higher standards to qualify for *payments* from an employee benefit plan, *e.g.*, a disability benefit plan, the employee is required to comply with the requirements of the benefit plan in order to receive payments. The employee may choose not to meet the higher standards of the benefit plan and thereby not receive payments from the plan; however, the employee continues to be entitled to FMLA leave. Section 825.207(d) has been amended to incorporate this guidance.

The California Department of Fair Employment and Housing urged that § 825.306(b) be amended to reflect that collection of this information by the employer is discretionary and that it is appropriate for the employer to comply

with State or local law. California law does not permit an employer to require that the medical certification specify the serious health condition which led to the leave request. Section 825.701 of the regulations provides guidance to employers regarding the responsibility to comply with applicable State statutes. If the provisions of the State statute are more beneficial to the employee or more restrictive in terms of the rights of the employer (such as by prohibiting a requirement that more medical information be required), the employer must comply with that State statute.

The law firm of Fisher and Phillips contended that the provision that employers may use another type of medical certification only if no additional information is required is not supported by FMLA § 104(c)(3). The Department disagrees, with one exception. The provisions of § 104(c)(3) relate to the circumstances when an employee is unable to return from FMLA leave due to the onset or continuation of a serious health condition. The information required by this section of the statute and the regulations is the maximum which can be requested. Nothing in § 104(c)(3) implies that an employer may ask for more information than is required by § 825.306. Section 825.207(d) has been amended to permit the employer to request a greater amount of information if required in order for an employee to qualify for payments from an employer benefit plan, or in the event the employee is on a worker's compensation absence and the applicable worker's compensation statute permits the employer to acquire additional information.

Michael Meaney suggested that certification of a disability should be strictly limited to medical doctors (M.D.s). The Department is unable to adopt this suggestion in light of the guidance provided by the Congress and the Department's deliberations over the definition of a health care provider. For example, FMLA's legislative history indicates clear Congressional intent that Christian Science Practitioners be included in the definition of health care provider. These individuals are clearly not M.D.s. In considering the types of health care providers available to the general population, particularly those who live in rural areas which do not have ready access to a doctor (MD), but regularly rely on nurse practitioners and midwives, the Department concluded that it is appropriate to include these professions in the definition of a health care provider. Rather than further limit the definition of a health care provider in § 825.118 of the regulations, the Final Rule expands the practitioners that may qualify as health care providers.

This section has also been revised to clarify the certification requirements when the employer's paid leave plan contains lesser obligations. Only the employer's lesser certification requirements may be imposed when paid leave is substituted for FMLA leave, as provided in § 825.306(c). See also § 825.207(h).

Adequacy of Medical Certification (§ 835.307)

Six commenters (four working women advocacy groups and two unions) urged that when an employer requires a second or third medical opinion, not only the costs of obtaining the opinion by the health care provider be at the employer's expense, but because the employee is expending time at the employer's direction, the employer should also be required to pay the employee for the time spent in acquiring the required medical opinions. The Department has considered these comments carefully but has concluded that Congress did not intend that employees on unpaid FMLA leave be paid for the time spent obtaining second and third medical opinions. Section 825.307(d) has been amended, however, to make it clear that an employer must in all cases reimburse an employee or family member for any reasonable ''out-of-pocket'' travel expenses incurred in obtaining the required second and third opinions.

The Equal Rights Advocates requested an exception be provided where obtaining the second or third opinion for an immediate family member would be onerous. Further, they suggest that when the employer requires a second or third medical opinion and the employee's leave has already begun, the employee should be allowed to continue on leave and the employer should be restrained from demanding reimbursement for insurance premiums. If the third opinion disputes the original medical certification, the employee may be required to return to work; the employer may not take any unfavorable action against the employee; the employer shall not be entitled to reimbursement for insurance premiums paid during the leave; and, the employee's FMLA leave entitlement shall be reduced by the period of leave actually taken.

The third medical opinion becomes necessary only when the second opinion disagrees with the original opinion. In the suggestion, the third opinion now agrees with the second, which means that either the employee or the employee's family member does not or did not have a serious health condition. If a serious health condition did not exist, the employee was not entitled to take *any* FMLA leave, as the absence was not for an FMLA reason. Thus, the employer is prohibited from charging or deducting the time of the absence from the employee's FMLA leave entitlement, and the employee does not have the rights and protections of the statute for that absence. The Department is unable to incorporate this suggestion in the regulations. The Department agrees, however, that pending the ultimate resolution of the employee's entitlement to leave through the certification process, the employee is provisionally entitled to the benefits of the Act, including maintenance of group health benefits. If the certifications do not ultimately establish the employee's entitlement to FMLA leave, the leave will not be counted as FMLA-qualifying and may be treated as paid or unpaid leave under the employer's established leave policies. This section is so revised.

The Equal Rights Advocates further suggest that the second and third medical opinion should only be allowed if it is not unduly burdensome to the family member. The right of the employer to require a second medical opinion when the employer has reason to question the validity of the original medical certification is statutory. Consequently, the employer is entitled to the second opinion, and the third opinion if the second opinion disagrees with the original opinion. The alternative is for the employee to forego FMLA leave. However, § 825.307 has been amended to provide that an employer may not ordinarily require an employee to travel outside normal commuting distances in obtaining the required opinions.

The Women Employed Institute and Women's Legal Defense Fund suggest that when an employer requires a second or third medical opinion, the employee should be provided a copy of the results. The Department agrees and has added § 825.307(c)(1) to require the employer, upon request from the employee, to provide copies within two business days.

Nineteen commenters commented on the provision that prohibits an employer from obtaining a second medical opinion from a health care provider that the employer employs or regularly utilizes. Several of the commenters are large hospital facilities or Health Maintenance Organizations (HMOs) who have large numbers of doctors either on the payroll or with whom they regularly contract to provide medical care to their patients. Kaiser Permanente

suggested that only those health care providers whom the employer regularly employs to provide employee medical exams be excluded. Kennedy Memorial Hospitals suggested the regulations be changed to allow an employer-affiliated physician to render a second opinion and to require a neutral physician provide a third opinion if necessary. Koehler Manufacturing Company recommended that a health care provider regularly employed by the employer be allowed to provide the second medical opinion as this health care provider would be familiar with the job duties and responsibilities. Other commenters suggested that an employee be required to be examined by the employer's medical department. United Healthcare Corporation operates HMOs and has contractual relationships with the majority of physicians within a given area, and suggests it is virtually impossible to comply with this requirement. Section 103(c)(2) of the Act provides that a health care provider designated or approved to provide a second medical opinion shall not be employed on a regular basis by the employer, which is a statutory prohibition. The Department is unable to adopt the suggestions.

Ten commenters were critical of the provision in § 825.307(a) that prohibits an employer from making *any* contact with the employee's health care provider to obtain additional information, including the health care provider's address and telephone number. They indicated this prohibition worked against the interests of both the employee and the employer. The absence of the opportunity of the employer's health care provider contacting the employee's health care provider potentially creates additional, unnecessary costs for the employer and unnecessary discomfort for the employee who may be on leave for a serious health condition, leaving as the only recourse obtaining a second medical opinion. After review of these comments the Department agrees to some extent that a total prohibition on contact with the employee's health care provider is not in the best interests of both parties in many cases. Employers have observed that if they could only talk with the employee's health care provider to ask one or two clarifying questions, the initial medical certification could be accepted without resorting to a second, and maybe a third, opinion. The regulations have been amended in § 825.307(a) and in § 825.310(b) (certification of fitness-for-duty) to permit a health care provider representing the employer to contact the employee's health care provider for purposes of *clarifying* the information in the medical certification or confirming that it was provided by the health care provider. The inquiry may *not* seek *additional* information regarding the employee's condition. Such contact may only be made *with* the employee's or family member's permission as appropriate. If the employee refuses to give permission, the employer may then require certification from a second health care provider. The optional medical certification form is being amended to include the health care provider's address and telephone number. Further, if the FMLA leave is running concurrently with a workers' compensation absence under State provisions that permit the employer or employer's representative to have direct contacts with the health care provider treating the workers' compensation injury or illness, such authorized direct contacts with the health care provider are not prohibited under FMLA (unless the employee chooses to forego the workers' compensation claim). This contact may only be made by a *health care provider* representing the employer, as most employers are not medically qualified to pose clarifying questions to the employee's health care provider. Further, a number of commenters have expressed concern regarding the privacy of the employee and the ethical considerations of the employee's health care provider furnishing information to a non-medical person (the employer). By requiring the employee's permission (or where following authorized procedures under workers' compensation laws) and limiting the contact to a health care provider, both these considerations and concerns will be addressed. It should be noted that although the regulations do not *require* that the employee's permission be obtained in writing, a prudent employer should follow such a practice.

Seventeen commenters addressed the issue of the third medical opinion. One commenter observed that the employer/employee should be able to use a health care provider (HCP) that is employed by the employer. Others suggested a number of processes to select the health care provider to provide the third opinion, such as: select the third health care provider on the basis of the worker's compensation statute; the choice should be the employer's alone as the opinion is obtained at the employer's expense; either the employee or employer submit a list of from three to five health care providers to the other and let the other party select one from the list; the selection should be made by the first and second health care providers; the local medical society should be allowed to make the selection; obtain a list of seven to 10 health care providers and let the employer and employee each strike names until only one is left. Two commenters stated that the provision currently in the Interim Final Rule is reasonable.

The Department has thoroughly reviewed the comments and finds there are a number of viable methods for selecting the third health care provider. The current regulations place no limitation on the method for selecting the third HCP and it seems appropriate to continue to provide the employer and employee flexibility to use any mutually agreeable method. The Final Rule will incorporate the provision of the current rule without change. It should be noted that the prohibition against using a health care provider regularly employed by the employer does not apply to the selection of the health care provider to render the third medical opinion (subject to the agreement of the employee).

Fisher and Phillips observed that the regulations are silent on medical certification when the health care provider is located in another country. The observation is accurate. Since the regulations became effective, a number of issues have arisen when the employee or a member of the employee's immediate family (*e.g.*, parent) is visiting or living in a country other than the United States. The Department has added a provision to § 825.305(a) to address this issue. In essence, the employer must accept a medical certification from a health care provider who is licensed to practice in that country, and make arrangements for second and third opinions, if required, with health care providers in that country.

The Edison Electric Institute asked when a second or third medical opinion is sought, what kind of information may the employer request? The Department has designed the optional medical form to be used for all three of the medical opinions as needed. If the employer chooses not to use the optional form for the second and third opinion, the information that may be requested is limited to that contained on the form and in § 825.306 of the regulations.

Subsequent Recertifications of Medical Conditions (§ 825.308)

Thirteen commenters addressed the request for comments in the Interim Final Rule regarding the appropriate length of time that a medical

certification should be valid. Two commenters suggested that no time frame should be established, but that it should be dictated by the nature of the employee's condition and any changes in the condition (*e.g.*, the employer should determine when another certification would be appropriate). Several commenters suggested that an employer should not be required to rely on any certification that was obtained over six months prior to the current notice of need for FMLA leave. Three of the commenters indicated that an employee should be able to use a medical certification that had been obtained within the past six months or a year. Another commenter observed that permitting the use of non-current certifications would provide the potential for abuse. The law firm of Sommer and Barnard suggested a maximum of 12 weeks for the life of the validity of the certification under any circumstances, including the taking of leave intermittently or on a reduced leave schedule. They referred to the provisions in this section that permit the employer to request recertification every 30 days. The longest time of validity of the certification suggested by any commenter was one year.

Seventeen commenters raised concerns on the particular circumstances that permit an employer to require recertifications. The majority of the commenters indicated that permitting a recertification every 30 days is not *reasonable* as contemplated by the statute. Others indicated that limiting the recertification to every 30 days was too long; some suggested 15 days instead of 30 days. Some urged that the recertification should be obtained at the employer's expense. One commenter asked what recourse the employer has when the employee does not provide the requested recertification.

After a review of all the comments the Department agrees that permitting the employer to routinely request recertification every 30 days is not reasonable in some circumstances. Section 825.308 has been changed to provide that where a certification provides a minimum duration of more than 30 days, the employer may not obtain recertification until that minimum period has passed unless the circumstances specified in the regulations are present. For chronic conditions, recertification is ordinarily permitted every 30 days, but only in connection with an absence. Exceptions are provided only if circumstances have changed significantly or the employer has reason to believe the employee was not absent for the reason indicated. Because the statute does not provide for second or third opinions for recertifications, no such opinions may be required. The recertification must be obtained at the employee's expense unless the employer voluntarily chooses to pay for the recertification itself. Congress specifically required the second and third opinions to be obtained at the employer's expense. Congress did not include such a requirement regarding recertifications; consequently, there is no basis for the Department to impose the costs on the employer by regulation. If the employee fails to provide the recertification within 15 days when it was practicable to do so, the employer may delay further FMLA leave until the recertification is provided.

Notice of Intent To Return to Work (§ 825.309)

Employees may be required to report periodically on their status and intent to return to work while on FMLA leave *provided* the employer's policy regarding such reports is not discriminatory. The Women's Legal Defense Fund asked that the term ''discriminatory'' be defined and that the regulations set out how often an employer may request status reports. They also urged that the regulations state that employers may not require reports in a manner that discriminates on the basis of gender, race, *etc.*

The statute already provides a prohibition regarding discrimination. There are a number of references in the regulations to Title VII of the Civil Rights Act which prohibits discrimination based on sex, race, *etc.*

Since the statute became effective there has been no feedback to the Department indicating difficulties with the aspect of discrimination pursuant to either FMLA or Title VII. The regulations presently state that, with regard to reasonableness, the employer must take into account all the relevant circumstances and facts related to the individual's leave situation. Clearly, it is the intent of the statute and the regulations that employers not use the entitlement to require status reports in a manner that is burdensome and disruptive to the employee while on FMLA leave. The intent is that such requests be reasonable under the existing circumstances. An employer who misuses or abuses this provision may be found to have engaged in prohibited acts under the statute. It does not seem appropriate or necessary to repeat the prohibitions of Title VII in these regulations. This section will remain unchanged in the Final Rule.

Three commenters requested clarification regarding the employee's status when the employee fails to return at the conclusion of the leave or after 12 weeks of absence.

If the employee does not return to work at the conclusion of the planned leave, the employee should give the employer reasonable notice of the need for an extension if less than 12 weeks of FMLA leave been exhausted in the 12-month period. If the employee is unable to or does not return to work at the end of 12 weeks of FMLA leave, all entitlements and rights under FMLA cease at that time; the employee is no longer entitled to any further restoration rights under FMLA, and the employer is no longer required to maintain group health benefits pursuant to FMLA.

The law firm of Black, McCluskey, Sourers and Arbaugh, suggest that an employee who does not provide a status report after being given notice should be considered not intending to return to work.

The determination would be dependent upon all the facts in the specific case. The commenter assumes that the employee has received the notice. Perhaps the employee is in another city caring for a parent and does not receive a request mailed to the employee's home. It is simply not possible to state a general rule regarding this circumstance; it is dependent on all the facts. Clearly, the failure to respond does not constitute unequivocal notice in all cases.

The Texas Department of Human Services asked for a definition of ''unequivocal,'' and whether it meant a written statement. The definition of this term is that it is understandable in only one way with no expression of uncertainty, *i.e.*, distinct, plain, absolute, clear. It has nothing to do with whether the notice is written or verbal.

The law firm of Fisher and Phillips urges that the regulations should clarify whether employees who request FMLA leave in excess of 12 weeks are entitled to any FMLA leave and whether they are entitled to maintenance of group health coverage.

The fact that the employee requests a greater amount of leave than the 12-week entitlement under FMLA does not negate his/her right to FMLA leave. The employee would be entitled to take 12 weeks FMLA leave with full rights and protections including maintenance of group health insurance. The employee's status would be reexamined at the end of the 12-week FMLA entitlement.

The law firm of Sommer and Barnard urges that the regulations provide that, if an employee wishes to return to work prior to the anticipated end of the leave

period, the employee be required to give the employer at least one or two days notice.

The Department agrees that an employee should give reasonable notice to the employer where early return to work is foreseeable, and the regulations have been revised in paragraph (c) of this section to provide for a minimum of two days notice from the employee. Employers may also obtain this information through status reports from employees.

The Society for Human Resource Management asked if an employer may require certification from an employee for adoption or birth of a child upon return to work? May an employer require certification from a father for bonding leave? The answer to both questions is affirmative; however, the employer's request for documentation must be reasonable, and should be obtained at the *beginning* of the leave rather than at the conclusion. The regulations have been changed in § 825.113 to provide for such reasonable documentation of the reason for FMLA leave.

Return to Work Medical Certification/ Fitness-for-Duty (§ 825.310)

Six commenters objected to the language of the regulations that provides for a fitness-to-return-to-work certification pursuant to an employer's uniformly-applied policy. They also expressed concern regarding the implications resulting from ADA requirements.

The Department agrees with some of these concerns. This section of the regulations has been changed to make it clear that the requirement of uniformity applies only to employees in similar circumstances (*i.e.*, the same occupation, suffering from the same serious health condition). Furthermore, pursuant to ADA, the requirement for such a physical must be job-related and consistent with business necessity.

Two commenters urged that the fitness-for-duty certification be obtained at the employer's expense.

The statute clearly requires the employer to bear the costs of the second and third medical opinions. The Congress made no such provision for recertifications or fitness-for-duty certifications. The Department is unable to assign these costs to the employer in the absence of statutory language.

Four commenters urged that the regulations provide for second and third medical opinions on fitness-for-duty certifications as in the case of the original medical certification.

The statute expressly provides for second and third medical opinions regarding the original medical certification. No such provision is contained in the statute for the fitness-for-duty certification. The Department is unable to incorporate this suggestion in the Final Rule.

Four commenters urged that the employer be permitted to confirm the employee's fitness-for-duty with an examination by the in-house medical department. This may be particularly relevant with regard to an employee returning from drug abuse treatment who may be subject to periodic follow-up examinations after returning to work.

The regulations do not prohibit the employer from requiring the employee to submit to an examination after returning to work, provided such examination is job related and consistent with business necessity in accordance with ADA guidelines. However, an employer *may not* deny return to work to an employee who has been absent on FMLA leave pending such an ''in-house'' examination. The statute provides the employee must *only* provide the employer with certification from the *employee's health care provider* to qualify to return to work. Any examination by the employer's medical staff may take place the first day of the employee's return to work.

Failure To Satisfy Medical Certification Requirements (§ 825.311)

The law firm of Sommer and Barnard observes that the regulations provide that an employer may require that an employee's request for leave be supported by certification. If the employee fails to furnish certification then surely the employer should be able to deny the entire leave, not simply the continuation of leave. Two commenters urge that if an employee fails to provide the required certification, not only should continuation of leave be denied, but the employee should be subject to disciplinary action by the employer.

The Department agrees with this analysis, and has modified § 825.311 to state that if the employee never provides the certification then the leave is not FMLA leave. If the leave taken by the employee is not FMLA leave, the employee does not enjoy the protections of the statute.

The Society of Professional Benefit Administrators expressed concern regarding the relationship between worker's compensation statutes and FMLA. As discussed above, the Final Rule has been changed in § 825.207 to address worker's compensation absences and FMLA.

Refusal to Provide FMLA Leave or Reinstatement (§ 825.312)

The Department of Civil Service, State of New York comments that in the event the employee requests to return to work prior to the agreed date, the employer should not be required to reinstate the employee immediately but should be given a reasonable period to make the necessary arrangements.

The Department has clarified this issue in §§ 825.309(c) and 825.312(e) of the regulations. An employee may not be required to take more FMLA leave than necessary to address the circumstances for which leave was taken. If the employee finds the circumstance has been resolved more quickly than anticipated initially, the employee shall provide the employer reasonable notice—two business days if feasible. The employer is required to restore the employee where such notice is given, unless two days notice was not feasible—for example, where the employee receives a release from the health care provider to return to work immediately, and that release is obtained earlier than anticipated.

The law firm of Sommer and Barnard commented regarding the requirement that when taking intermittent leave for planned medical treatments the employee should make a reasonable effort to arrange the treatments so as not to unduly disrupt the employer's operations. Section 825.312 fails to recognize this employee obligation or assign a consequence for its breach.

The Department concurs to some degree. It should be kept in mind that the employee does not always have alternatives to the dates of planned medical treatment as this is largely in the control of the health care provider. Section 825.302(d) has been modified in a manner that should lead to greater communication between the employee and the employer regarding this issue.

The Employers Association of New Jersey asks if an eligible employee who has accumulated an unacceptable number of absences and has been given a final warning that provides that any absence within the next 30 days will result in immediate discharge may take FMLA leave to care for an ill spouse.

An eligible employee who has not exhausted his/her 12-week FMLA leave entitlement would be entitled to take leave under these circumstances if all the requirements of the statute are met. The employee would be required to provide adequate notice of the need for leave, 30 days in advance if foreseeable or as soon as practicable, and if required by the employer, medical certification confirming the existence of the spouse's

serious health condition. The employer may not take adverse action against the employee by denying leave or taking other disciplinary actions for having taken FMLA leave. The taking of FMLA leave may not be counted against the employee under the employer's attendance policy. See § 825.220.

The Equal Employment Advisory Council suggests that it be made clear that employee misconduct prior, during or after FMLA leave that violates company policy is subject to the consequences of the employer's policies.

The Department wishes to make clear that FMLA is not a sanctuary for the employee who has violated or is in violation of company policies. A basic tenet of FMLA is that the employee who takes FMLA leave is to be treated no differently than if the employee had continued to work. For example, if the employer has a non-discriminatory policy that the second time the employer becomes aware that an employee has engaged in the illegal use of drugs, the employee will be terminated, the fact that the employee is on FMLA leave will not shield the employee from the continued application of that policy (*i.e.*, termination).

The Society for Human Resource Management (SHRM) asked whether an employee who is on FMLA leave and who resigns in the middle of the leave has to be kept on the payroll until the leave period is over.

No. The regulations provide that once an employee gives the employer unequivocal notice that the employee does not intend to return to work at the conclusion of leave, the employee may be terminated and FMLA leave ends, as well as the obligation for maintenance of health benefits, and the employer need not keep the employee on the payroll after receiving such notice.

SHRM asked where an employee who is pregnant requests FMLA leave, but the health care provider declines to certify that the employee is unable to work as a result of the serious health condition (ongoing pregnancy), what action should the employer take?

In this circumstance the employee does not qualify as being unable to work as a result of her condition, and the employer could deny the use of FMLA leave.

SHRM asked how an employer was supposed to manage absenteeism if the employee continues to claim leave taken is covered by FMLA?

The Final Rule attempts to address some of these issues. An employer is entitled to request medical certification and recertification in connection with serious health conditions. The Final Rule provides that, if an employee never provides the medical certification, the absence is not FMLA leave; consequently, the leave is not protected by the FMLA. The Final Rule further provides that the employer may require documentation from the employee to confirm family relationships, as in the case of leave for birth or placement of a child for adoption or foster care. The Department believes there are a number of tools available to employers under the regulations that will serve to discourage employee abuse of FMLA leave, in addition to the basic concept that the 12 weeks of leave mandated by FMLA are unpaid.

The Koehler Manufacturing Company comments that it is unclear whether an employee may earn W–2 wages with some other employer while on FMLA leave.

The Department addressed this issue in the Interim Final Rule. Section 825.312(h) provides that whether an employee may engage in outside employment during FMLA leave is dependent upon the employer's established policy regarding outside employment. For example, the employer may require that all outside employment be pre-approved by the employer. If so, employment while on FMLA leave would be subject to this policy. This provision will remain unchanged in the Final Rule.

The Service Employees International Union took issue with the provision in § 825.312(h) applying the employer's policy regarding outside employment to periods of FMLA leave. SEIU maintained that there is no statutory basis for this provision, and that it constitutes the imposition of additional requirements on the taking of FMLA leave.

The Department does not agree with this view. As noted previously, a basic tenet under FMLA is that an employee on FMLA leave is entitled to no greater right, benefit, or position of employment than if the employee continued to work and had not taken the leave (*see* § 104(a)(3)(B) of the Act). While an employee is on FMLA leave, there continues to be an employment relationship, the employer is maintaining group health benefits and possibly other benefits, and the employee is entitled to return to the same or an equivalent job. Consequently, the employer's employment policies continue to apply to an employee on FMLA leave in the same manner as they would apply to an employee who continues to work, or is absent while on some other form of leave.

It is important to point out that the regulations do not prohibit outside employment by the employee on FMLA leave except as a result of the employer's established policies. In the absence of such a policy the employee may do as he/she chooses. However, taking outside employment during a period of FMLA leave may in some cases cast doubt on the validity of an employee's need for leave, particularly if the leave was being taken for the employee's own serious health condition.

IV. Subpart D—Enforcement Mechanisms

Employee Rights When FMLA Has Been Violated (§§ 825.400–825.404)

Federally Employed Women, 9 to 5, National Association of Working Women, Women's Legal Defense Fund, the Food and Allied Service Trades (FAST) and the United Food and Commercial Workers International Union (UFCW), suggest that the Interim Final Rule fails to include a complaint procedure that provides expedited relief and that the rule does not include injunctive relief as one of the available remedies in an employee's private court action. The Women's Legal Defense Fund and FAST urge that § 825.400(c) be amended to include ''other equitable relief as appropriate.'' FAST points out that the expedited procedure is important, particularly if the employer fails to maintain group health insurance and the employee has a serious health condition which heightens the need for medical benefits.

The provision for an expedited complaint procedure is not a regulatory issue, but rather is an internal agency administrative enforcement issue. In any event, such an expedited procedure was adopted under FMLA in appropriate circumstances, and will continue to be used as an effective enforcement tool in carrying out the Department's responsibilities pursuant to FMLA. The statute at § 107(a)(2) makes no provision for an eligible employee to seek equitable relief through an injunctive action. Such an action is available only for the Secretary in § 107(d). The suggestion will not be incorporated into the Final Rule, as it has no statutory basis.

In the event the employer violates FMLA by failing to maintain the group health benefits as required, and dropping the employee's coverage, the employer in effect becomes self-insured and liable for any medical expenses incurred by the employee that would have been covered by the group health plan. With respect to the comment that

the rule be amended to include equitable relief, although the current rule, at § 825.400(c), includes such relief (''employment, reinstatement and promotion''), the language has been clarified.

The Personnel Management Systems, Inc., urges that an employee be permitted to file a civil suit only after the Department has had an opportunity resolve the issue. The statute places no requirement that an employee exhaust administrative remedies before being authorized to file a private suit, as under Title VII. The legislative history confirms such a result. Therefore, no change will be made in the Final Rule.

The Chamber of Commerce of the USA questions the statutory basis for allowing an employee or *another person* to file a complaint with the Secretary of Labor, stating that only the affected employee should be permitted to file a complaint. The legislative history provides guidance on enforcement of the statute. FMLA's enforcement scheme is modeled after the FLSA, which has been in effect since 1938. Thus, FMLA creates no new agency or enforcement procedures, but instead relies on the time-tested FLSA procedures already established by the Department of Labor. Report from the Committee on Labor and Human Resources (S. 5), Report 103–3, January 27, 1993, pp. 35–36. The Department, in its enforcement of FLSA, has accepted complaints from employees as well as other persons who may have knowledge of the circumstances (*e.g.*, a relative of the employee, a Collective Bargaining Unit representative, a competitor, *etc.*).

The Nevada Power Company and the Edison Electric Institute suggest that punitive damages should be limited to those involving willful violations of the law. The statute does not explicitly provide for punitive damages, which would be available only if otherwise provided by law. Section 107(a)(1)(A)(iii) provides for an additional amount as liquidated damages to the amount awarded, including interest. An employer may avoid the liquidated damages if the employer can show to the satisfaction of the court that the violation was in good faith and the employer had reasonable grounds for believing that the action taken was not a violation of the statute. The regulations cannot limit the employer's liability for violations of the statute, when no such limitation is provided under the law.

The United Paperworkers International Union urges that the regulations require employers to justify significant changes in employment levels, thereby discouraging such manipulations to avoid coverage. There is no basis in the statute for requiring such action on the part of employers. However, § 825.220(b)(1) of the regulation has been amended to advise covered employers that such manipulation will be viewed as a violation of the acts prohibited by the statute and the regulations.

V. Subpart E—Records (§ 825.500)

Nine commenters, including the Women's Legal Defense Fund (WLDF) and the EEOC, expressed concern about maintaining the confidentiality of medical records. WLDF urged that separate files be maintained to protect the confidentiality of ADA records, and EEOC said that having one confidential medical file for both laws (FMLA and ADA) may not always satisfy the ADA confidentiality requirements. EEOC stated that ADA protects all ''information * * * regarding * * * medical condition or history of any employee,'' (see 29 CFR § 1630.14(c)(1)), which would include all employee medical information regardless of the form or manner in which it is provided, whereas the FMLA rule would be limited to ''records and documents relating to medical certifications, recertifications or medical histories of employees or employees' family members.'' According to EEOC, if all medical information is kept confidential under FMLA like under ADA, maintaining only one confidential medical file would satisfy the ADA *provided* employers administer the exceptions to the confidentiality requirement in conformance with ADA requirements (*e.g.*, employers would have to provide supervisors or managers only with the specific information ''regarding necessary restrictions on the work or duties of an employee'' (§ 825.500(g)(1)), and deny them free access to the entire medical files of employees). Section 825.500(g) has been amended to require that medical records created for purposes of FMLA and ADA must be maintained in accordance with ADA's confidentiality rules on medical information.

Nine commenters expressed concern regarding the recordkeeping burden imposed by FMLA. The LaMotte Company specifically took issue with the estimate provided in the Interim Final Rule of 3 minutes per response, observing that, in their opinion, the requirements would take much longer. They estimate each certified letter would require one hour to prepare in addition to copying and sending. In addition, they experienced numerous telephone inquiries from employees and pointed out that time is also necessary for training of supervisors and managers. The Human Resources Department, Village of Schaumberg, Illinois, also took issue with three-minute burden estimate. They observed that calculating hours of unpaid leave and the number of hours worked versus hours of FMLA leave, determination of FMLA versus other types of leave, and creating a system to collect employees' share of benefits all required significantly more time than three minutes. Most other commenters simply expressed the opinion that FMLA recordkeeping requirements are burdensome. The ''three minutes per response'' is an estimate of the annual *recordkeeping* burden per employee, to record and/or file records required by the regulations that are not otherwise required by law or would otherwise be kept as a customary prudent business practice. It does not include the preparation of employee notices required by the regulations, determination of employee eligibility, or procedures for payment of health benefits during FMLA leave.

The LaMotte Company observed that they had received statements from employees who believe that instead of making arrangements for others to take care of their children when they have minor colds, sore throats, or ear infections, they may now stay home with the child because they don't have to worry about saving sick leave for a truly serious health condition, and because FMLA may not be counted against their ''point'' system. Section 825.114 contains the definition of a serious health condition. The regulations provide that an employer may require an employee to provide a medical certification with regard to a serious health condition for a member of the employee's immediate family (child). If the certification does not confirm the existence of a serious health condition as defined under FMLA, or the employee fails to provide the certification when requested, the leave is not FMLA leave.

The California Department of Fair Employment and Housing and the Chesapeake Farm Credit object to the requirement for a covered employer who has no eligible employees to comply with the recordkeeping requirements of this section. Section 825.500(c) will be changed in the Final Rule to require the covered employer with no eligible employees to post the notice required in § 825.300 and to maintain only the basic payroll information (i.e., name, address, occupation, rate or basis of pay, daily and weekly hours, etc.) already required under FLSA. These data are required to

enable the covered employer to determine employee eligibility, when necessary. Once the covered employer has eligible employees, the additional records required by § 825.500(d) must be maintained.

Florida Citrus Mutual observes this section does not address the question of records to be maintained by joint employers. The records to be kept by primary employers and covered secondary employers in a joint employment situation should be listed separately, they contend.

The regulations have been revised to provide that a covered secondary employer in a joint employment situation need only keep basic payroll records with respect to its secondary employees. Other records are not necessary because the secondary employer's responsibilities in a joint employment relationship are only to reinstate the employee under the circumstances set forth in § 825.106(a) and to not violate any of the prohibited acts of the statute.

VI. Subpart F—Special Rules for Local Education Employees

Limitations on Intermittent Leave or Leave on a Reduced Leave Schedule (§ 825.601)

The Women's Legal Defense Fund and the American Federation of Teachers/National Education Association stated that the instructional employee who takes intermittent leave amounting to 20 percent or less of the working days during the period of leave should not be subject to the usual rules for taking intermittent leave in §§ 825.117 and 825.204. The employer does not have a right to transfer the employee to an alternative position under this circumstance. They suggest that the third sentence of paragraph (a)(2) of this section be deleted.

The statute at § 108(c)(1) gives the educational employer the right to require the employee either to take leave of a particular duration not to exceed the duration of planned medical treatment or to transfer to an alternative position that better accommodates recurring periods of leave. The statute is silent regarding the circumstances when the employee takes intermittent leave for 20 per cent or less of the total number of working days in the period during which the leave would extend. After further consideration the Department agrees that § 108 of the Act provides the only provision applicable to instructional employees and, therefore, an educational employer does not have the latitude to transfer an instructional employee to an alternative position in this circumstance. The Final Rule will reflect this change.

Leave Taken for ''Periods of a Particular Duration'' (§ 825.603)

Federally Employed Women, the Women's Legal Defense Fund and the American Federation of Teachers/National Education Association objected to the provision in paragraph (a) of this section which states that leave that is required by the employer for either a particular duration or until the end of the school term is to be counted as FMLA leave. They view this provision to be doubly penalizing when the employee is required to take more leave than desired or medically necessary, and then to have that ''extra'' leave count against his or her FMLA leave entitlement. They urge that this provision be changed to reflect that such leave is to be counted against the FMLA entitlement only if the employee chooses rather than is required to take additional leave.

The legislative history provides the following guidance: Whenever a teacher is required to extend his or her leave under section 108(c) or (d), such leave would be treated *as other leave under the act*, with the same rights to employment and benefits protection contained in section 104. Report from the Committee on Labor and Human Resources (S. 5), Report 103–3, January 27, 1993, p. 37. However, the Department agrees that because the employer had the option of not requiring the employee to take leave until the end of the term, the leave should not count against the 12-week entitlement.

The Chicagoland Chamber of Commerce, *et al.*, commented that all periods of leave taken by school employees should count as FMLA leave, including any period of leave that occurs outside the school term. For example, if an instructional employee begins a six-week leave two weeks before the school term ends, the entire six-week period should count as FMLA leave.

The Department disagrees. An absence taken when the employee would not otherwise be required to report for duty is not leave, FMLA or otherwise. For example, the regulations do not require an employee, who normally works Monday through Friday, and is taking intermittent leave, to have counted as leave the weekend days (*i.e.*, Saturday and Sunday). If the employee(s), absent FMLA, would not have otherwise been required to take some form of leave to cover the absence, then the absence is not to be counted against the employee's FMLA leave entitlement. Section 825.200(f) has been added to the Final Rule to clarify this issue.

Restoration to ''Equivalent Position'' (§ 825.604)

The Women's Legal Defense Fund and the American Federation of Teachers/National Education Association urged that this section be clarified in the Final Rule to make it clear that restoration of an employee at the conclusion of FMLA leave based on existing policies and practices of a school board must provide substantially the same protections as provided in the statute for other reinstated employees. Specifically, the school board may not restore the employee to a position which would require any additional licensure or certification, or would result in substantially increased commuting time.

The Department agrees with the suggestion that the regulation prohibit restoration to a position requiring additional licensure. While as a general matter restoration must be to a geographically proximate location, a school board policy may deviate from this requirement provided the deviation does not result in substantially less employee protections. Therefore, commuting time will not be mentioned in the rule.

VII. Subpart G—How Other Laws, Employer Practices, and Collective Bargaining Agreements Affect Employees' FMLA Rights

More Generous Employer Benefits Than FMLA Requires (§ 825.700)

Nothing in FMLA diminishes an employer's obligation under a collective bargaining agreement (CBA) or employment benefit program or plan to provide *greater* family or medical leave rights to employees than the rights established under FMLA (FMLA § 402(a)), nor may the rights established under FMLA be diminished by any such CBA or plan (FMLA § 402(b)).

This section of the regulations described the interaction between FMLA and employer plans and CBAs. Included were provisions to describe FMLA's delayed effective date for CBAs in effect on August 5, 1993—FMLA would not apply until February 5, 1994, or the expiration date of the CBA, whichever occurred earlier. For CBAs subject to the Railway Labor Act and other CBAs which have no expiration date for the general terms, but which may be reopened at specified times (*e.g.*, to amend wages and benefits), the date of the first amendment after August 5, 1993, and before February 5, 1994, was

considered the effective date for purposes of FMLA.

The State of Oregon's Bureau of Labor and Industries, State of Oklahoma's Office of Personnel Management, Fisher & Phillips, and College and University Personnel Association raised questions or offered comments on whether ''more generous'' family or medical leave provided pursuant to contract or an employer policy may be counted against an employee's 12-week FMLA leave entitlement under circumstances where either the employees would not yet be eligible for FMLA leave, or the leave is for a reason that does not qualify as FMLA leave (*e.g.,* employers adopt leave policies that mirror FMLA but relax eligibility requirements or the definition of serious health condition, or expand the ''family member'' definition to include in-laws and domestic partners). To reduce the incentive for employers to eliminate such ''more generous'' policies, these commenters contend that DOL should allow employers to count such leave towards FMLA leave entitlements.

Leave granted under circumstances that do not meet FMLA's coverage, eligibility, or specified reasons for FMLA-qualifying leave may *not* be counted against FMLA's 12-week entitlement. However, employers may designate paid leave as FMLA leave and offset the maximum entitlements under the employer's more generous policies to the extent the leave qualifies as FMLA leave.

Sommer & Barnard questioned whether FMLA's 12 weeks of leave must be added to longer periods of employer-provided leave (*e.g.,* disability leave); or, alternatively, whether employers may offset FMLA's leave entitlement against the longer periods of employer-provided leave. To the extent that a particular absence recognized under the employer-provided plan also qualifies as FMLA leave, and the leave is designated by the employer in accordance with § 825.207 and § 825.208, the absence may be counted concurrently under both FMLA and the employer's plan (*e.g.,* a disability that is covered by the employer's disability leave plan which also meets FMLA's definition of ''serious health condition that makes the employee unable to perform the functions of the position'').

The Chamber of Commerce of the USA commented that the language in paragraph (c) of this section provided a reasonable construction of the Act's effective date for CBAs subject to the Railway Labor Act and other CBAs which do not have an expiration date for the general terms, but which may be reopened between August 5, 1993, and February 5, 1994, to amend wages and benefits. The example given, however, of a contract reopening to amend wages and benefits wrongly suggests that a contract reopened for any other reason also should be considered terminated for FMLA effective date purposes, the Chamber contended. Any reopening not pertaining to benefits should not be construed as a termination of the agreement according to this comment.

We disagree with the interpretation suggested by this comment. *Any* reopening of the CBAs subject to this rule, which is specifically limited to CBAs subject to the Railway Labor Act and other CBAs which do not have an expiration date for the general terms, for the first time after August 5, 1993, shall be considered the termination date of the CBA for purposes of FMLA's effective date.

The Contract Services Association of America questioned whether the costs associated with FMLA's requirements to maintain group health benefits during periods of FMLA leave could be credited by a contractor towards meeting its fringe benefit requirements under wage determinations issued pursuant to the McNamara-O'Hara Service Contract Act (SCA), or are they excluded as are other statutorily-mandated benefits such as FICA, workers' compensation, *etc.*? Because SCA excludes any benefit otherwise required by Federal, State, or local law to be provided by the employer to an employee, such costs may not be claimed as a credit for purposes of meeting the contractor's fringe benefit obligations to employees under the SCA. In any event, SCA credit may only be taken for contributions that cover periods when work is performed.

The Contract Services Association also asked whether cash-equivalent payments made in lieu of furnishing bona fide health and welfare benefits to an SCA-covered employee have to continue when the employee is on FMLA leave. Such cash equivalent payments do not have to continue while the employee is on *unpaid* FMLA leave.

State Family and Medical Leave Laws and FMLA (§ 825.701)

Nothing in FMLA supersedes ''any *provision* of any State or local law that provides greater family or medical leave rights'' than the rights under FMLA (*see* FMLA § 401(b)). Because of this statutory ''non-preemption'' language, the determination of which law applies (State versus Federal) in a particular situation must be examined on a provision-by-provision basis. Where the requisite coverage or applicability standards of both laws are met and the laws contain differing provisions, an analysis must be made of both laws, provision-by-provision, to determine which standard(s) from each law will apply to the particular situation. The standard providing the greater right or more generous benefit to the employee from each law (provision-by-provision) will apply. Note, however, that leave taken for a reason specified in both the Federal and State law may be simultaneously counted against the employee's entitlement under both laws. This section of the regulations attempted to demonstrate the interaction between FMLA and State laws with examples. Numerous comments were received suggesting there may be considerable confusion over the ''provision-by-provision'' analysis that must be conducted in each particular case.

Employers Association of New Jersey recommended guidelines be included in the regulations for applying FMLA and State law in the following manner:

If an employee takes leave for a purpose which is recognized under only one of the two laws, rights and obligations are governed by that law alone, and the amount of leave taken cannot be charged against the amount of leave which may be allowed under the other law.

If an employee takes leave for a purpose which is recognized under both the FMLA and a State law, the employee is entitled to the benefits of whichever law is the most favorable to the employee and the amount of leave taken is charged against the amount which is allowed under each law.

The availability of benefits under either law is subject to the limitations of that law with respect to the duration of leave, type of leave, *etc.*

The Equal Rights Advocates suggested additional examples where a State law is silent on an issue addressed by FMLA. If an employee is ''eligible'' under both FMLA and a State or local law, and the State or local law is silent on a provision contained in FMLA, and if the FMLA provision is restrictive (as to employee rights or benefits), then the State or local law would govern as to that provision. If the FMLA provision is not restrictive (or extends a right, benefit or privilege to employees), then the FMLA would govern as to that provision. For example, a State law that grants employers the right to deny the taking of leave to high-level executives could not be applied to any FMLA-eligible employees, because FMLA extends to all eligible employees the entitlement to leave for qualifying reasons. If the same State law contained a provision mandating that all

employees who take leave be restored to employment when the leave ends, then FMLA's ''key'' employee exemption could not be applied to deny an employee reinstatement (*i.e.*, the Federal law would not apply at the time of reinstatement).

The guidelines and interpretations suggested above by the Employers Association of New Jersey and the Equal Rights Advocates correctly construe the relationship between FMLA and other State laws, which have been included here for guidance.

Chicagoland Chamber of Commerce commented that, with respect to substantive provisions such as eligibility and coverage requirements, amount of leave, benefits and employment protections, and substitution requirements, the more generous or expansive provisions between the FMLA and the State law should apply and be considered to offset or simultaneously satisfy overlapping but less generous provisions. ''More generous'' should be determined on a ''common sense, quantitative basis,'' they contend, such as where a State law allows up to 16 weeks of leave for a serious health condition in any year and FMLA allows 12 weeks, the State law maximum would apply. They recommended the regulations specify that differences in more generous substantive provisions in State law cannot be combined with other less restrictive provisions in FMLA, and vice versa. With respect to procedural provisions, such as notification of leave, certification requirements, and other procedural requirements, the commenter recommended that the provisions of FMLA and its implementing regulations should be applied in all cases because of the administrative difficulty in trying to determine if State or Federal provisions are more or less generous. The Louisiana Health Care Alliance (Phelps Dunbar) similarly suggested that any State law procedural regulations which are inconsistent with FMLA should be preempted.

FMLA provides that it shall not supersede ''any provision'' of any State or local law that provides greater family or medical leave ''rights'' than under FMLA. There is no basis under this language or the legislative history to distinguish between procedural provisions that extend greater rights to employees and substantive provisions that provide more generous family or medical leave benefits to employees.

The Women's Legal Defense Fund recommended the regulations address the interaction between FMLA and State workers' compensation laws. The State of Oregon's Bureau of Labor and Industries asked if State workers' compensation laws qualify under FMLA as a ''State * * * law that provides greater * * * medical leave rights * * *''

If a State workers' compensation law provides a job guarantee to workers out of work temporarily due to occupational injuries that is more generous than FMLA's job restoration provisions, such law is a ''State * * * law that provides greater * * * medical leave rights * * *'' and would govern an employee's reinstatement. On the other hand, where such occupational injuries also meet FMLA's definition of ''serious health condition that makes the employee unable to perform the functions of the position,'' the employer would have to maintain the injured employee's group health benefits under the same terms and conditions as if the employee had continued to work during the workers' compensation-related leave of absence (at least for the duration of the employee's remaining FMLA leave entitlement in the 12-month period).

The Association of Washington Cities commented that an employee could take 12 weeks of FMLA-qualifying leave for a purpose other than the birth or adoption of a child and still be eligible under applicable State law to another (subsequent) 12 weeks of ''parenting'' leave, which could enable an employee to take 24 weeks of leave in a single year. Under the terms of the applicable statutes, this is true.

The State of Oregon's Bureau of Labor and Industries noted that Oregon's parental leave law provides a 12-week window following the birth of a child for the use of parental leave, and asked if an employee's use of 12 weeks of parental leave within the first 12 weeks following the birth exhausts the parent's Federal right to take parental leave within the first year. An employee ''eligible'' under both the Federal and State law would exhaust both entitlements simultaneously within that 12-week period. Note, however, that if the employee used fewer than 12 weeks during that initial 12-week period following the birth, the employee could use the remainder of his or her Federal leave entitlement under FMLA within one year after the birth. This commenter also pointed out that a parent must share a state leave entitlement with his or her spouse regardless of whether they work for separate employers. Under FMLA, each FMLA-''eligible'' spouse would retain a Federal entitlement equal to 12 weeks minus their portion of the State leave taken.

The University of California observed that, under California law, employers may not obtain second or third opinions except in the case of an employee's own serious health condition. Thus, because FMLA was intended to permit Christian Science practitioner certification, employers would not be able to obtain second or third medical opinions in connection with the serious health condition of a spouse, child or parent. Under the applicable statutes, this would be true.

Downs Rachlin & Martin stated that, under Vermont's Parental and Family Leave Act, an employee may use accrued sick leave or vacation leave, not to exceed six weeks, consistent with existing policy. ''Utilization of accrued vacation leave shall not extend the leave provided therein.'' The commenter questioned whether the Federal law provided a more generous benefit. The answer is ''Yes'' with respect to FMLA's more generous substitution provisions and the length of the allowable leave period.

Hill & Barlow pointed out that the Massachusetts maternity leave statute entitles an eligible employee to up to eight weeks of leave for the purpose of giving birth or for adopting a child. They asked if an employee had used 12 weeks of FMLA leave earlier in the year for a purpose other than giving birth or adopting a child, would the employee still be eligible to the State leave entitlement? The answer is ''Yes.''

The Corporation for Public Broadcasting objected to having to comply with both FMLA and State law where one law's benefit is not clearly more generous than the other. They, together with the Equal Employment Advisory Council and the Electronics Industries Association, also questioned the provision entitling an employee to use leave under Federal and State or local law concurrently, and thus to take a total amount of leave which may exceed the already generous amount allowed by either law. The Corporation for Public Broadcasting suggested a Federal preemption if permitted or the lobbying of Congress to obtain such authority. California Bankers Association similarly suggested DOL include language to preempt all State law in this area or allow an employee to take only the greater of the leaves available (to prevent ''piggybacking'' leave under both FMLA and State law). National Association of Plumbing-Heating-Cooling Contractors suggested that ''cafeteria-style'' programs where different standards and/or benefits from each or both the Federal and State laws are selected to form a separate, hybrid leave plan should be strictly prohibited, and likewise urged that the issue of preemption be revisited.

Given the literal language of FMLA, DOL has no authority to preempt State laws to the extent they provide more generous leave rights to employees. The results about which the majority of the comments complained occur by operation of law (FMLA *and* State family and medical leave laws), and cannot be mitigated by regulation. Only editorial changes have been included in this section of the regulations in response to the comments, in order to clarify examples and provide additional guidance.

Federal and State Anti-discrimination Laws (§ 825.702)

Nothing in FMLA modifies or affects any Federal or State law prohibiting discrimination on the basis of race, religion, color, national origin, sex, age, or disability (*see* FMLA § 401(a)). The stated purpose of the FMLA in this regard, according to its legislative history, was to make leave available to eligible employees within its coverage, and not to limit already existing rights and protection under applicable anti-discrimination statutes (for example, Title VII of the Civil Rights Act of 1964, as amended by the Pregnancy Discrimination Act; and the Americans with Disabilities Act (ADA)). This section included examples of how FMLA would interact with the ADA with respect to a qualified individual with a disability as defined under that Act.

Comments from U.S. Senators Dodd and Kerry (sponsors of both FMLA and ADA), in a letter to the EEOC dated November 22, 1993, make clear that congressional intent was for both Acts to be applied simultaneously, and that an employer must comply with whichever statutory provision provides the greater rights to employees. In keeping with that statutory intent, FMLA § 401 should not be interpreted in any way as limiting or forcing an election of rights under FMLA or ADA. Similarly, comments from U.S. Representatives Williams and Ford (Committee on Education and Labor), in a letter to the EEOC dated November 19, 1993, explained that congressional intent, in the case of an employee with a serious health condition under FMLA who is also a qualified individual with a disability under ADA, was for the FMLA and ADA to be applied in a manner that assured the most generous provisions of both would apply. The statutes provide simultaneous protection and at all times an employer is required to comply with both laws. The Department concurs with this interpretation of the FMLA as it relates to the ADA and other discrimination laws. In summary, providing the ''more beneficial'' rights or protections does not undermine an employer's obligation to observe the requirements of both statutes. Satisfying any or all FMLA requirements, including granting an employee 12 weeks of leave and restoring the employee to the same job, does not absolve an employer of any potential ADA responsibilities to that employee (and vice versa).

Several commenters (G.M. Smith Associates, Inc; Personnel Management Systems, Inc; Chamber of Commerce of the USA; Equal Employment Advisory Council; and Louisiana Health Care Alliance (Phelps Dunbar)) urged a contrary view, that compliance with FMLA should constitute or substitute for compliance with ADA, to simplify the burdens of multiple compliance obligations. Some stated that employers evaluating ''undue hardship'' under ADA need not disregard the cost and disruption of FMLA leave already taken by an employee. This point was also raised by Personnel Management Systems, Inc. and Chamber of Commerce of the USA. The Department has been advised by the EEOC that the *ADA*, unlike the FMLA, considers the burden on an employer for purposes of evaluating the feasibility of employee medical leave. Cost and disruption to the employer are directly relevant to the factors listed in ADA's regulatory definition of ''undue hardship.'' Therefore, according to EEOC, employers may consider FMLA leave already taken when deciding whether ADA accommodation leave in excess of 12 weeks poses an undue hardship. This does *not* mean, however, that more than 12 weeks of leave automatically poses an undue hardship under the ADA. According to EEOC, employers must apply the full ADA undue hardship analysis to each individual case to determine whether or not leave in excess of 12 weeks poses an undue hardship.

An employee's right to be restored to the same or an equivalent position under FMLA applies to the job which the employee held at the time of the request for FMLA leave, even if that job differs from the job held previously due to a reasonable accommodation under ADA. (This point was raised by the Chamber of Commerce of the USA.) The ''essential functions'' of the position would also be those of the position held at the time of the request for leave. An employer may not change the essential functions of an employee's job in order to deny the employee the taking of FMLA leave. However, this does not prevent an employee from voluntarily ending his or her leave and accepting an alternative position uncoerced and not as a condition of employment. The employee would then retain the right to be restored to the position held by the employee at the time the FMLA leave was requested (or commenced) until 12 weeks have passed, including all FMLA leave taken and the period the employee returned to ''light duty.'' When an employer violates both FMLA and ADA, an employee may be able to recover under either or both statutes (but may not be awarded double relief for the same loss).

VIII. Subpart H—Definitions (§ 825.800)

The Women's Legal Defense Fund urges that all definitions that are modified in the text of the regulations be modified similarly in Subpart H. Certainly the Department intends to maintain the integrity of this Subpart, and any material modifications will be incorporated.

The law firm of Alston and Bird recommended that the term group health plan should not include non-employment related benefits paid by employees through voluntary deductions, *e.g.*, individual insurance policies. We agreed with the recommendation and language has been added to § 825.209(a)(1) to exclude such benefits from the definition of group health plan, and make clear an employer is not responsible for maintaining or restoring such benefits for employees who take FMLA leave.

The American Association of Retired Persons (AARP) took issue with the definition of ''parent'' in this section and stated there is nothing in the statutory language or the legislative history that required the exclusion of parents in-law. We disagree, as discussed above in connection with § 825.113. Section 101(7) of the statute defines parent as the biological parent of an employee or an individual who stood *in loco parentis* to an employee when the employee was a son or daughter. There is no language in the legislative history to indicate Congress contemplated expanding the definition beyond the plain meaning of the words. In the Final Rule, the sentence, ''This term does not include parents 'in-law' '', will be removed from the definition of ''parent'' in § 825.800, but not from the explanatory guidance in § 825.113. This is being done not because we agree with AARP but rather because the language in the statute and the regulation are clear regarding the term and the additional sentence is unnecessary.

The law firm of Fisher and Phillips urged that the Final Rule should clarify whether employees of a U.S. employer who are employed in the territories and

possessions of the United States may be eligible employees. The law firm asks for the same clarification with regard to employees working in countries other than the United States. Sections 825.105(a) and 825.800 in the Final Rule will be amended to reflect that employees employed within any State of the United States, the District of Columbia or any territory or possession of the United States are subject to FMLA and may be eligible employees. Employees employed outside these areas are not counted for purposes of determining employer coverage and may not become eligible employees as FMLA does not apply.

The Personnel Management Systems, Inc., and the Credit Union National Association, Inc., suggest that only eligible employees should be counted in determining whether an employer has 50 or more employees for FMLA coverage purposes. The language of the statute, in § 101(2) defines the term ''Eligible Employee.'' In paragraph (3) of that section, the statute defines ''Employee'' as having the same meaning as the definition found in section 3 of the Fair Labor Standards Act. Section 101(4) of the statute defines '' 'Employer' as any person * * * who employs 50 or more *employees* * * *'' (emphasis added). If Congress had intended to limit the count for determining coverage to *eligible* employees only, it could have included that language ''50 or more *eligible* employees.'' The legislative history indicates clearly Congress' intent to count all employees. The Department is unable to incorporate the desired change.

The Medical Group Management Association recommends that the definition of employee should not include equity owners (partners) of corporations who are both employers and employees. These individuals should be excluded from the count of employees even though their names appear on the payroll.

Persons who are partners in a business are not employees for purposes of the FMLA because partners are not included within the definition of employee under the FLSA. The definition of ''employer'' in § 101(4) of the FMLA means any *person* engaged in commerce or in any industry or activity affecting commerce who employs 50 or more employees, *etc.*, and includes any *person* who acts, directly or indirectly, in the interest of an employer to any of the employees of the employer. Section 101(8) defines ''person'' to have the same meaning as in § 3(a) of the FLSA, which means an individual, *partnership*, association, corporation * * * (*etc.*). Partners are not to be included in the count of employees for coverage or eligibility, even if their names appear on the payroll. However, equity owners (*e.g.*, stockholders) of a corporation may also be employees of the corporation and, as such, when their names appear on the payroll, are included in such employee counts and they may also become eligible employees. No change will be made in the Final Rule in this regard as the determination of whether such an individual is an employee is case specific.

The National Community Mental Healthcare Council observes that the definition of an individual who is incapable of self-care is deficient in that it only addresses activities of daily living (ADLs), which relate to physical incapacity, but does not address those with mental illness. They recommend the definition be expanded to include ''instrumental activities of daily living'' (IADLs). Their recommendation is appropriate and the language in the Final Rule in § 825.113(c)(1) has been amended to include IADLs.

The Council also urges that the definition of health care provider (HCP) be expanded to mental health professionals and mental health services. The definition of HCP has been amended to include any HCP from whom the employer or a group health plan's benefits manager will accept certifications. This change should address this concern.

IX. Appendix B, Appendix C, and Appendix E

A number of comments which raised concerns about Form WH–380, the optional form to obtain medical certification, have been addressed above and will not be repeated herein.

Three commenters, including The First Church of Christ, Scientist, offered alternative forms to be used for the medical certification. The concern of the Christian Scientists was that they are unable to provide a medical diagnosis of the employee. As the Department has already decided to revise the medical certification form, the concerns of these commenters will be addressed by the revision to the extent appropriate in keeping with the statutory language. Further, we believe having separate or special forms for differing kinds of health care providers would prove confusing, and may, in fact, result in more requests for second and third medical opinions.

G.M. Smith Associates, Inc., recommends the form include a letter from the employee to the health care provider that requests referral to a board certified specialist if necessary. The form should ask the health care provider if going to work will harm the employee and whether the illness/injury precludes the employee from travel or being at work. If either of these questions are answered affirmatively, the health care provider would provide a date on which the employee will be available for limited duties.

There is no statutory basis for obtaining the additional information requested by this commenter. For example, § 825.702 provides that an employee may not be required to accept a light or limited duty position. The Department is unable to add the requested information to the form as it does not comport with the statutory provisions.

Appendix C

The Women's Legal Defense Fund points out that information is not included on the notice that notes potential application of either more beneficial State statutes or more beneficial provisions of a Collective Bargaining Agreement. They recommend separate notices for employers in each of the States that give broader rights. They suggest a statement in the notice that employees should consult with union representatives, that notices be provided to employers in Spanish, that the Department develop materials for employees on how to obtain FMLA leave, and that the Department install an 800-hotline number for FMLA inquiries and complaints.

The purpose of the notice is to outline the essential provisions and protections of FMLA to employees, much in the same manner as the notice for FLSA. The size of the poster, whether 8½ inches x 11 inches (the size of the FMLA poster) or 14 inches x 17 inches (the size of the FLSA poster), would not accommodate every possible nuance of the FMLA. Employees are advised to contact the nearest office of the Wage and Hour Division for additional or more specific information. The notice has been available in Spanish for some time. The Department has published State/Federal comparisons of family and medical leave statutes. These informational materials are available to employees as well as employers, thus, separate notices for each State are unnecessary. The Department has published a Fact Sheet and a Guide to Compliance with the FMLA for use by employees and employers alike to obtain more specific, non-technical information regarding the statute. Section 825.301(a)(2) instructs employers they may use the

Department's Fact Sheet for general distribution to employees when the employer does not have an employee handbook in which FMLA policies have been incorporated. The Department has made no final decision on the viability of installing an 800 number.

Appendix E

The Department had promised earlier that if the IRS published guidance concerning the relationship between FMLA and certain aspects of the tax code, e.g., COBRA, the Department would include the IRS guidance as an appendix to the final rule. IRS published guidance concerning COBRA in Notice 94–103, appearing in Internal Revenue Bulletin No. 1994–51, dated December 19, 1994. A copy of the notice is attached to the regulation as Appendix E.

X. Regulatory Flexibility Act

Under the Regulatory Flexibility Act, Public Law 96–354 (94 Stat. 1164; 5 U.S.C. 601 *et seq.*), Federal agencies are required to analyze the anticipated impact of proposed rules on small entities. Because FMLA applies only to private employers of 50 or more employees (and to all public agencies regardless of the number of employees employed), it covers only the larger private employers—in total, about five percent of all possible employers, or approximately 300,000. Also, FMLA requires covered employers to grant only *unpaid* leave to eligible employees for specified reasons. For these reasons, the Department concluded that the implementing rules likely would not have a ''significant economic impact on a substantial number of small entities'' within the meaning of the Regulatory Flexibility Act. The Acting Chief Counsel for Advocacy of the U.S. Small Business Administration (SBA) filed official comments on the interim final FMLA rules which disagreed with DOL's conclusion. SBA contended essentially that the FMLA regulations will have a significant impact on *all* businesses covered by the FMLA, the vast majority of which, SBA contends, are small.

The definition of ''small'' business varies considerably, depending upon the policy issues and circumstances under review, the industry being studied, and the measures used. SBA generally uses employment data as a basis for size comparisons, with firms having fewer than 100 employees or fewer than 500 employees defined as small.[1]

Statistics published by the Internal Revenue Service indicate that in 1990, of the estimated 20.4 million business tax returns that were filed (4.4 million for corporations, 1.8 million for partnerships, and 14.2 million for sole proprietorships), fewer than *7,000* would qualify as large businesses if an employment measure of 500 employees or less were used to define small and medium-sized businesses.[2] The SBA stated in its comments that, based upon 1990 Census tabulations, there are 105,720 firms which employ between 50 and 99 employees; 55,249 firms which employ between 100 and 249 employees; and 14,999 firms which employ between 250 and 499 employees, providing a total of 175,968 businesses with fewer than 500 employees.[3] Thus, the SBA suggests that if an employment measure of 500 employees is used to define ''small'' businesses, 92.4 percent of all those businesses which are affected by the FMLA and its implementing regulations are ''small'' businesses.[4]

In fact, however, this analysis overstates the number of ''small'' businesses that are actually affected by FMLA's requirements because they must grant unpaid leave only to employees who are defined as ''eligible'' under the law. It is conceivable, for example, that a covered ''small'' business with 250 employees working at several geographically dispersed worksites would have no employees who are eligible to take FMLA leave (because there would be fewer than 50 employees working within 75 miles of each worksite). Similarly, an employer with a very transient workforce, with all part-time employees, may have no eligible employees.[5]

Assuming the appropriateness of the 500-employee criterion applied by SBA to define ''small'' businesses for purposes of FMLA, and acknowledging that there are a number of small businesses that would be covered by the FMLA rules, we note that the Congress, in selecting the 50-employee coverage threshold, frequently characterized the new legislation as exempting smaller businesses and applying only to larger ones. We also note the overwhelming majority of small businesses that are not subject to the FMLA. Information compiled by the U.S. Department of Commerce and reported in *County Business Patterns,* 1990, indicates that there are 5,862,938 establishments employing between one and 49 employees; 175,375 establishments employing between 50 and 99 employees; 97,742 establishments employing between 100 and 249 employees; 24,334 establishments employing between 250 and 499 employees; 9,592 establishments employing between 500 and 999 employees; and 5,582 employing 1,000 or more employees.[6] These numbers confirm the Department's earlier estimates that roughly five percent (*i.e.,* 312,625) of *all* establishments would be covered by FMLA at the 50-employee coverage threshold. Moreover, these numbers suggest further that, if SBA's 500-employee threshold for defining ''small'' businesses is applied, *less than* five percent of *all small businesses* would be covered by the FMLA, while more than 95 percent of *all small businesses* would be exempted from FMLA coverage.

In addition, William M. Mercer, Incorporated and the Institute of Industrial Relations at the University of California, Berkeley jointly conducted a survey of nearly 300 employers on the FMLA in November 1993. This report notes that, before FMLA was passed, there was opposition to mandated leave based on the idea that small business would be negatively impacted by such leave. However, small employers (those with less than 200 employees) who

[1] The State of Small Business: A Report of the President Transmitted to the Congress (1991), Together with The Annual Report on Small Business and Competition of the U.S. Small Business Administration (United States Government Printing Office, Washington, D.C., 1991), p. 19. A more detailed breakdown also used by SBA is: under 20 employees, very small; 20–99, small; 100–499, medium-sized; and over 500, large. On the other hand, the size standard established by SBA at 13 CFR § 121.601 is 500 employees for most industries.

[2] U.S. Department of the Treasury, Internal Revenue Service, *SOI Bulletin* (Spring 1990) Table 19; reprinted by SBA in The State of Small Business (1991), *Ibid.*, p. 21.

[3] U.S. Department of Commerce, Bureau of the Census, *Current Population Survey*, 1990. These tabulations contain firms with employees only; the self-employed were excluded. The self-employed would not constitute a covered ''employer'' for purposes of the FMLA and, therefore, these tabulations tend to understate the *actual* number of ''small'' businesses that are excluded from FMLA's coverage and overstate the *proportion* of small businesses that are covered by the FMLA.

[4] This 92.4 percent figure appears misleading to us for measuring the universe of employers at issue for purposes of this analysis in that it excludes the very substantial number of small businesses employing fewer than 50 employees which would not be covered by the FMLA and, therefore, would not be impacted by the rule.

[5] Not every employee of a covered employer is eligible for FMLA leave. To be eligible, an employee must work for a covered employer and have worked for at least 12 months and 1,250 hours in the 12 months preceding the leave, and work at a location where the employer employs at least 50 employees within 75 miles of the worksite. § 101(2) of FMLA; 29 CFR § 825.110.

[6] U.S. Department of Commerce, Bureau of the Census, *County Business Patterns*, 1990 (CPB–90–1), issued January 1993, Table 1b. These tabulations exclude most government and railroad employees, and self-employed persons.

responded to this survey were not significantly more likely to anticipate major financial costs or great administrative difficulty in complying with the FMLA than large employers. In response to questions on the California-mandated family leave law (in effect since January 1992), small employers reported the lowest level of utilization of family leave and no higher direct and indirect financial costs than did larger employers. In fact, the only employers that reported any ''major costs'' associated with California-mandated leave were those that employed 5,000 or more employees. A greater percentage of large employers had experienced disagreements with employees over family leave issues. Large employers, however, were also most likely to note a beneficial effect on absenteeism, employee morale, public relations, and supervisory relationships as a result of mandated leave. Small employers, in contrast, were most likely to note a beneficial effect on worker productivity and co-worker relationships.

For its part, the Department made a conscious effort to adopt the least burdensome regulatory alternatives (consistent with the statute) in order to reduce the burden on *all* employers, including small employers. In particular, recordkeeping requirements were kept to the minimum level necessary for confirming employer compliance with FMLA's statutory leave provisions. In addition, to ease administrative burdens on all employers, including small entities, employee notification requirements that apply when employees request FMLA leave were summarized in § 825.301(c) of the regulations, and DOL made available a prototype notice which employers could adapt for their own use to meet the specific notice requirements (see § 825.301 (c)(8)).

The Department also engaged in extensive education and outreach efforts. We prepared and made available a Fact Sheet and a Compliance Guide to the FMLA, to assist all employers in understanding and meeting their compliance obligations. Because FMLA does not diminish any greater family or medical leave rights provided by State or local law, DOL also prepared and distributed comparisons of State and Federal family and medical leave laws, indicating which law provided the greater employee rights or benefits for compliance purposes.[7]

Thus, DOL continues to believe that the extraordinary measures which it has taken in connection with the implementation of the FMLA will ease the burdens of compliance on all employers, including small employers, and that compliance with the FMLA will *not* have a significant economic impact on a substantial number of small entities. This conclusion is reinforced by available research which shows that costs associated with implementing the FMLA are not significant for covered businesses including covered ''small'' entities with eligible employees.

In conclusion, even assuming a 500-employee size standard, only 5 percent of small employers are covered by FMLA. Based on our review of the studies conducted, the Department concludes, therefore, that the FMLA rules would not likely have a significant economic impact on a substantial number of small entities.

Because of its belief that FMLA significantly impacts a substantial number of small entities, the SBA also suggested in its comments a number of regulatory alternatives in certain areas that it believed would ease the burden on small entities, as follows:

Exclude Part-time Employees When Determining Employer Coverage Under FMLA: The SBA suggested that DOL reduce the coverage of small businesses by changing the 50-employee threshold for coverage to exclude part-time workers from the count. Because small entities employ more part-time workers than larger firms, SBA stated that inclusion of part-time employees will increase the coverage of the FMLA to firms ''that otherwise might not have been covered.'' FMLA's coverage criteria are statutory and, as specifically stated in the legislative history, it was the clear intention of the Congress that all employees of an employer are to be included in the count, including part-time employees. (''It is not necessary that every employee actually perform work on each working day to be counted for this purpose. * * * Similarly, part-time employees and employees on leaves of absence would be counted as 'employed for each working day' so long as they are on the employer's payroll for each day of the workweek.'' Report of the Committee on Labor and Human Resources (S.5), Senate Report 103–3 (January 27, 1993), p. 22.)

Clarify Definitions of ''Serious Health Condition'' and ''Medical Necessity'' for FMLA Leave: SBA observed that the definition of ''serious health condition'' (which is statutory) was broadly inclusive, and suggested that employers would be required to look to FMLA's legislative history in order to determine whether an employee's condition is considered a ''medical necessity'' that justifies FMLA leave. SBA mistakenly presumes that this is a judgment that the statute and regulations permit an employer to make. If the health condition meets the definition in the regulations at § 825.114 and, as provided in §§ 825.305–825.307, an employee furnishes a completed DOL-prescribed medical certification from the health care provider, the only recourse available to an employer that doubts the validity of the certification is to request a second medical opinion at the employer's expense. Employers may not substitute their personal judgments for the test in the regulations or the medical opinions of the health care providers of employees or their family members to determine whether an employee is entitled to FMLA leave for a serious health condition.

Expand the ''Key Employee'' Definition to Include Job Descriptions Instead of Salary: Under the ''key employee'' exception, employers may deny job restoration in certain cases (*see* §§ 825.217–825.219). SBA recommended that DOL expand the regulatory definition of ''key employee'' to include an employee's job description in lieu of salary, because there may be situations, particularly in small entities, where lower salaried employees perform on-going employment functions that are vital to the business and prevent economic injury to the employer's operation but must be reinstated due to the comparatively low salary that is paid. We note first that it seems unlikely that an employer would not want to restore such an employee to employment if the employee performs the vital role indicated, but that is beside the point. The provisions applicable to the ''key employee'' exception are statutory and state, specifically, that the employees affected must be ''* * * a salaried eligible employee who is among the highest paid 10 percent of the employees employed by the employer within 75 miles of the facility at which the employee is employed'' (*see* § 104(b)(2) of the FMLA). There is no authority under these provisions of the law to ignore the salary paid to ''key employees.'' SBA's suggestion directly contravenes the statute and cannot be adopted by regulation.

Require a Four-Hour Minimum Absence for Intermittent (or Reduced Leave) Schedules: FMLA allows eligible employees to take leave intermittently or on a reduced leave schedule in certain cases. The regulations state that an employer may not limit the period of intermittent leave to a minimum number of hours. SBA stated that DOL could significantly reduce the impact of

[7] The Department's Women's Bureau has also distributed to the public a comparison of State maternity/family leave laws since June 1993.

the FMLA on small entities by imposing a minimum leave requirement, and suggested a four-hour minimum would both enable an employee to work a half-day and permit the employer to ease administrative burdens in complying with the FMLA regulations. Permitting an employer to impose a four-hour minimum absence requirement would unnecessarily and impermissibly erode an employee's FMLA leave entitlement for reasons not contemplated under FMLA (*see* also the discussion of § 825.203, above). Section 102(b)(1) of the FMLA provides that ''* * * [t]he taking of leave intermittently or on a reduced leave schedule pursuant to this paragraph shall not result in a reduction in the total amount of leave to which the employee is entitled * * * beyond the amount of leave actually taken.'' An employee may only take FMLA leave for reasons that qualify under the Act, and may not be charged more leave than is necessary to address the need for FMLA leave. Time that an employee is directed by the employer to be absent (and not requested or required by the employee) in excess of what the employee requires for an FMLA purpose would not qualify as FMLA leave and, therefore, may not be charged against the employee's FMLA leave entitlement.

''Small'' Business Handbook: SBA also suggested that DOL consider providing a handbook detailing compliance requirements for small entities, *i.e.,* comparisons of State and Federal family and medical leave benefits and a summary of employee notification requirements, to ease administrative burdens on small entities. As noted above, we prepared and distributed comparisons of State and Federal family and medical leave laws, indicating which law provided the greater employee rights or benefits for compliance purposes, and distributed Fact Sheets and Compliance Guides which summarized compliance requirements.

In conclusion, the Department believes that the available data and studies on the cost impact of the FMLA generally support the Department's conclusion that the implementing regulations will likely not have a significant economic impact on a substantial number of small entities within the meaning of the Regulatory Flexibility Act. The regulatory revisions suggested by the SBA to ease compliance requirements for small entities are inconsistent with the statute or its legislative history and cannot be adopted by regulation.

XI. Executive Order 12866

The Department prepared an analysis of the anticipated cost impact of the FMLA rules to meet the regulatory impact analysis (cost/benefit) requirements of former Executive Order 12291 on Federal Regulations. The Department's analysis was principally based on previous analyses of the cost impact of prior versions of FMLA legislation pending before the U.S. Congress which were conducted by the U.S. General Accounting Office (GAO). The GAO's latest report on FMLA legislation, updated to reflect the 1993 enactment, estimated the cost to employers of maintaining health insurance coverage for workers on unpaid family and medical leave at $674 million per year (GAO/HRD–93–14R; February 1, 1993). The GAO's estimates assumed that employers would experience no measurable costs under the law beyond those of maintaining group health insurance during periods of permitted absences, based on a survey of selected firms in the Detroit, Michigan and Charleston, South Carolina areas. It was the GAO's view that its estimates likely overstated actual costs to employers for leave granted under the new law because the GAO could not adjust for the mitigating influence of pre-existing leave policies already provided by employers either voluntarily or to comply with other mandates such as State or local laws or collective bargaining agreements (34 States, the District of Columbia, and Puerto Rico provide for some type of job-protected leave guarantee by law).

While several commenters expressed a general view that FMLA would have an adverse impact on business, or summarized previous studies that tried to measure the economic impact of FMLA, only one comment was received concerning DOL's impact analysis included in the preamble to the Interim Final Rule (the Department specifically requested comments on the estimates of the impact of the FMLA and the implementing regulations). The Los Angeles County Metropolitan Transportation Authority disagreed with GAO's estimates of cost to employers of complying with various FMLA provisions. This commenter believed the cost estimates are significantly understated because they do not take into account the productivity losses while employees are out on leave, and the costs of hiring and training temporary replacement workers. The Department pointed out in the preamble to the Interim Final Rule (58 FR 31811; June 4, 1993) that quantifying the impact of the FMLA is highly dependent on numerous assumptions which are severely constrained by limitations in available data. The regulatory impact analysis noted the existence of differing views on this issue, citing specifically the Minority Views contained in the House Report (H.R. Rept. 103–8, 103d Cong., 1st Sess., p. 60), which characterized the GAO estimates as understated either because assumptions were inconsistent with the legislative provisions or with the conclusions of other studies. The preamble to the Interim Final Rule noted in particular the issues of productivity losses and training costs for temporary replacements cited in studies by the former American Society for Personnel Administrators (now the Society for Human Resource Management) and the SBA. Furthermore, studies prepared subsequent to the June 1993 Interim Final FMLA rules suggest that our initial assessment of GAO's estimates as being reasonable remains valid.

The Senate Committee on Labor and Human Resources noted from testimony by the Commissioner of the Oregon Bureau of Labor and Industries that employers in the State of Oregon, when confronted with implementing similar requirements at the State level, reported little or no difficulty in implementing the law, and none had reduced other existing benefits to comply with the new statutory family leave requirements (Report of the Committee on Labor and Human Resources (S.5), Report 103–3, January 27, 1993, p. 14).

Further, according to a three-year study conducted in Minnesota, Oregon, Rhode Island, and Wisconsin by the Families and Work Institute, sizable majorities of covered employers reported that the State laws were neither costly nor burdensome to implement (*Ibid.*). This study suggested that the availability of unpaid leave required by the new State laws had no impact on the length of leave taken by working mothers and only a slight impact on the length of leaves taken by fathers. The survey found that most companies, even the smallest, already offered considerable amounts of leave to working mothers. Small companies granted leave as often as larger companies. Even among companies with fewer than 10 employees, 79 percent indicated they guaranteed the jobs of women who took leave. The survey found that, *prior to passage of the State laws,* 83 percent of all employers surveyed provided job-guaranteed leave to biological mothers for childbirth, and 67 percent of those maintained health benefits during the maternity leave. Sixty percent of all

employers similarly allowed fathers time off for newborns. Among other highlights from the survey, 91 percent of employers interviewed in the four States reported no difficulty with implementation of the State parental leave laws; the majority of employers reported no increase in costs for training, administration or unemployment insurance as a result of the State laws; 67 percent reported they most often relied on other employees to do the work of an employee on leave, while 23 percent reported they most often hired a temporary replacement; 94 percent reported that the leave laws had not forced them to reduce other benefits in order to pay for maintaining the health benefits of parents on leave; the percentage of working women who took unpaid leave for the birth of a child (78 percent) was unaffected by the enactment of the State laws; and the average duration of the leaves remained virtually unchanged by enactment of the State laws.

In a 1990 study by Professors Eileen Trzcinski and William Alpert commissioned by the SBA, a nationwide survey of business executives examined the impact on businesses of providing family and medical leave. The SBA study found that the costs of permanently replacing an employee are significantly greater than the costs of granting an employee's request for leave—terminations due to illness, disability, pregnancy, and childbirth cost employers from $1,131 to $3,152 per termination, compared to $.97 to $97.78 per week for granting workers' requests for leave (dependent on size of employer and managerial status of employee). *Ibid.*, p. 17.

A 1992 study by the Families and Work Institute also concluded that providing unpaid parental leave is more cost-effective for employers than permanently replacing employees—20 percent of the employee's annual salary, compared to 75 percent to 150 percent for permanently replacing an employee (*Ibid.*).

The Senate Committee Report concluded that additional costs to employers as a result of FMLA are minimal; that there is no evidence of greater business losses where State laws require similar family and medical leave; and, based on a 1989 GAO study of similar legislation, there would be no measurable net costs to business from replacing workers or lost productivity (costs result exclusively from continuation of health insurance coverage for employees on unpaid leave). *Ibid.*, p. 42.

In addition to the findings of the studies identified by the Senate committee report, according to a September 1993 survey of benefit managers by Hewitt Associates, an international consulting firm, most employers offer more generous leave policies than required by the FMLA. Nearly all (95 percent) of the 628 participants indicated that their policies go beyond the minimum requirements of the law. Nine of ten employers (92 percent) continue benefits other than health care for employees while on FMLA leave. Nearly half of the employers (45 percent) extend FMLA leave to employees at locations with fewer than 50 employees within 75 miles, 44 percent allow longer than 12 weeks of leave, and 30 percent allow FMLA leave for employees with less than 12 months of service. Most employers expect only a small percentage of employees to avail themselves of their FMLA policies in any given year. Nine of ten employers expect less than 5 percent of their employees to take FMLA leave in a given year; three of ten employers expect less than one percent of their employees to take FMLA leave in a year.

In addition, as discussed above, William M. Mercer, Incorporated and the Institute of Industrial Relations at the University of California, Berkeley jointly conducted a survey of nearly 300 employers on the FMLA in November 1993. The only employers that reported any ''major costs'' associated with California-mandated leave were those that employed 5,000 or more employees. A greater percentage of large employers had experienced disagreements with employees over family leave issues. Large employers, however, were also most likely to note a beneficial effect on absenteeism, employee morale, public relations, and supervisory relationships as a result of mandated leave. Small employers, in contrast, were most likely to note a beneficial effect on worker productivity and co-worker relationships.

A full discussion of alternatives considered is included in the preamble to the regulations, set forth above, under each of the relevant sections.

XI. Document Preparation

This document was prepared under the direction and control of Maria Echaveste, Administrator, Wage and Hour Division, Employment Standards Administration, U.S. Department of Labor.

XII. List of Subjects in 29 CFR Part 825

Employee benefit plans, Health, Health insurance, Labor management relations, Maternal and child health, Teachers.

Signed in Washington, DC, this 30th day of December, 1994.

Robert B. Reich,

Secretary of Labor.

Title 29, Chapter V, Subchapter C, ''Other Laws'', is amended by revising Part 825 to read as follows:

PART 825—THE FAMILY AND MEDICAL LEAVE ACT OF 1993

Subpart A—What is the Family and Medical Leave Act, and to Whom Does It Apply?

Sec.
825.100 What is the Family and Medical Leave Act?
825.101 What is the purpose of the Act?
825.102 When was the Act effective?
825.103 How did the Act affect leave in progress on, or taken before, the effective date of the Act?
825.104 What employers are covered by the Act?
825.105 In determining whether an employer is covered by FMLA, what does it mean to employ 50 or more employees for each working day during each of 20 or more calendar workweeks in the current or preceding calendar year?
825.106 How is ''joint employment'' treated under FMLA?
825.107 What is meant by ''successor in interest''?
825.108 What is a ''public agency''?
825.109 Are Federal agencies covered by these regulations?
825.110 Which employees are ''eligible'' to take leave under FMLA?
825.111 In determining if an employee is ''eligible'' under FMLA, how is the determination made whether the employer employs 50 employees within 75 miles of the worksite where the employee needing leave is employed?
825.112 Under what kinds of circumstances are employers required to grant family or medical leave?
825.113 What do ''spouse,'' ''parent,'' and ''son or daughter'' mean for purposes of an employee qualifying to take FMLA leave?
825.114 What is a ''serious health condition'' entitling the employee to FMLA leave?
825.115 What does it mean that ''the employee is unable to perform the functions of the position of the employee''?
825.116 What does it mean that an employee is ''needed to care for'' a family member?
825.117 For an employee seeking intermittent FMLA leave or leave on a reduced leave schedule, what is meant by ''the medical necessity for'' such leave?
825.118 What is a ''health care provider''?

Subpart B—What Leave Is an Employee Entitled to Take Under the Family and Medical Leave Act?

825.200 How much leave may an employee take?
825.201 If leave is taken for the birth of a child, or for placement of a child for adoption or foster care, when must the leave be concluded?
825.202 How much leave may a husband and wife take if they are employed by the same employer?
825.203 Does FMLA leave have to be taken all at once, or can it be taken in parts?
825.204 May an employer transfer an employee to an ''alternative position'' in order to accommodate intermittent leave or a reduced leave schedule?
825.205 How does one determine the amount of leave used where an employee takes leave intermittently or on a reduced leave schedule?
825.206 May an employer deduct hourly amounts from an employee's salary, when providing unpaid leave under FMLA, without affecting the employee's qualifications for exemption as an executive, administrative, or professional employee, or when utilizing the fluctuating workweek method for payment of overtime compensation, under the Fair Labor Standards Act?
825.207 Is FMLA leave paid or unpaid?
825.208 Under what circumstances may an employer designate leave, paid or unpaid, as FMLA leave and, as a result, count it against the employee's total FMLA leave entitlement?
825.209 Is an employee entitled to benefits while using FMLA leave?
825.210 How may employees on FMLA leave pay their share of health benefit premiums?
825.211 What special health benefits maintenance rules apply to multi-employer health plans?
825.212 What are the consequences of an employee's failure to make timely health plan premium payments?
825.213 May an employer recover costs it incurred for maintaining ''group health plan'' or non-health benefits coverage during FMLA leave?
825.214 What are an employee's rights on returning to work from FMLA leave?
825.215 What is an equivalent position?
825.216 Are there any limitations on an employer's obligation to reinstate an employee?
825.217 What is a ''key employee''?
825.218 What does ''substantial and grievous economic injury'' mean?
825.219 What are the rights of a key employee?
825.220 How are employees protected who request leave or otherwise assert FMLA rights?

Subpart C—How Do Employees Learn of Their FMLA Rights and Obligations, and What Can an Employer Require of an Employee?

825.300 What posting requirements does the Act place on employers?
825.301 What other notices to employees are required of employers under the FMLA?
825.302 What notice does an employee have to give an employer when the need for FMLA leave is foreseeable?
825.303 What are the requirements for an employee to furnish notice to an employer where the need for FMLA leave is not foreseeable?
825.304 What recourse do employers have if employees fail to provide the required notice?
825.305 When must an employee provide medical certification to support FMLA leave?
825.306 How much information may be required in medical certifications of a serious health condition?
825.307 What may an employer do if it questions the adequacy of a medical certification?
825.308 Under what circumstances may an employer request subsequent recertifications of medical conditions?
825.309 What notice may an employer require regarding an employee's intent to return to work?
825.310 Under what circumstances may an employer require that an employee submit a medical certification that the employee is able (or unable) to return to work (*e.g.*, a ''fitness-for-duty'' report)?
825.311 What happens if an employee fails to satisfy the medical certification requirements?
825.312 Under what circumstances may a covered employer refuse to provide FMLA leave or reinstatement to eligible employees?

Subpart D—What Enforcement Mechanisms Does FMLA Provide?

825.400 What may employees do who believe that their rights under FMLA have been violated?
825.401 Where may an employee file a complaint of FMLA violations with the Federal government?
825.402 How is an employer notified of a violation of the posting requirement?
825.403 How may an employer appeal the assessment of a penalty for willful violation of the posting requirement?
825.404 What are the consequences of an employer not paying the penalty assessment after a final order is issued?

Subpart E—What Records Must be Kept to Comply With the FMLA?

825.500 What Records must an employer keep to comply with the FMLA?

Subpart F—What Special Rules Apply to Employees of Schools?

825.600 To whom do the special rules apply?
825.601 What limitations apply to the taking of intermittent leave or leave on a reduced leave schedule?
825.602 What limitations apply to the taking of leave near the end of an academic term?
825.603 Is all leave taken during ''periods of a particular duration'' counted against the FMLA leave entitlement?
825.604 What special rules apply to restoration to ''an equivalent position?''

Subpart G—How do Other Laws, Employer Practices, and Collective Bargaining Agreements Affect Employee Rights Under FMLA?

825.700 What if an employer provides more generous benefits than required by FMLA?
825.701 Do State laws providing family and medical leave still apply?
825.702 How does FMLA affect Federal and State anti-discrimination laws?

Subpart H—Definitions

825.800 Definitions.

Appendix A to Part 825—Index

Appendix B to Part 825—Certification of Health Care Provider

Appendix C to Part 825—Notice to Employees of Rights under FMLA (WH Publication 1420)

Appendix D to Part 825—Prototype Notice: Employer Response to Employee Request for Family and Medical Leave (Form WH–381)

Appendix E to Part 825—IRS Notice Discussing Relationship Between FMLA and COBRA

Authority: 29 U.S.C. 2654; Secretary's Order 1–93 (58 FR 21190).

Subpart A—What is the Family and Medical Leave Act, and to Whom Does It Apply?

§ 825.100 What is the Family and Medical Leave Act?

(a) The Family and Medical Leave Act of 1993 (FMLA or Act) allows ''eligible'' employees of a covered employer to take job-protected, unpaid leave, or to substitute appropriate paid leave if the employee has earned or accrued it, for up to a total of 12 workweeks in any 12 months because of the birth of a child and to care for the newborn child, because of the placement of a child with the employee for adoption or foster care, because the employee is needed to care for a family member (child, spouse, or parent) with a serious health condition, or because the employee's own serious health condition makes the employee unable to perform the functions of his or her job (*see* § 825.306(a)(3)). In certain cases, this leave may be taken on an intermittent basis rather than all at once, or the employee may work a part-time schedule.

(b) An employee on FMLA leave is also entitled to have health benefits

maintained while on leave as if the employee had continued to work instead of taking the leave. If an employee was paying all or part of the premium payments prior to leave, the employee would continue to pay his or her share during the leave period. The employer may recover its share only if the employee does not return to work for a reason other than the serious health condition of the employee or the employee's immediate family member, or another reason beyond the employee's control.

(c) An employee generally has a right to return to the same position or an equivalent position with equivalent pay, benefits and working conditions at the conclusion of the leave. The taking of FMLA leave cannot result in the loss of any benefit that accrued prior to the start of the leave.

(d) The employer has a right to 30 days advance notice from the employee where practicable. In addition, the employer may require an employee to submit certification from a health care provider to substantiate that the leave is due to the serious health condition of the employee or the employee's immediate family member. Failure to comply with these requirements may result in a delay in the start of FMLA leave. Pursuant to a uniformly applied policy, the employer may also require that an employee present a certification of fitness to return to work when the absence was caused by the employee's serious health condition (*see* § 825.311(c)). The employer may delay restoring the employee to employment without such certificate relating to the health condition which caused the employee's absence.

§ 825.101 What is the purpose of the Act?

(a) FMLA is intended to allow employees to balance their work and family life by taking reasonable unpaid leave for medical reasons, for the birth or adoption of a child, and for the care of a child, spouse, or parent who has a serious health condition. The Act is intended to balance the demands of the workplace with the needs of families, to promote the stability and economic security of families, and to promote national interests in preserving family integrity. It was intended that the Act accomplish these purposes in a manner that accommodates the legitimate interests of employers, and in a manner consistent with the Equal Protection Clause of the Fourteenth Amendment in minimizing the potential for employment discrimination on the basis of sex, while promoting equal employment opportunity for men and women.

(b) The enactment of FMLA was predicated on two fundamental concerns—the needs of the American workforce, and the development of high-performance organizations. Increasingly, America's children and elderly are dependent upon family members who must spend long hours at work. When a family emergency arises, requiring workers to attend to seriously-ill children or parents, or to newly-born or adopted infants, or even to their own serious illness, workers need reassurance that they will not be asked to choose between continuing their employment, and meeting their personal and family obligations or tending to vital needs at home.

(c) The FMLA is both intended and expected to benefit employers as well as their employees. A direct correlation exists between stability in the family and productivity in the workplace. FMLA will encourage the development of high-performance organizations. When workers can count on durable links to their workplace they are able to make their own full commitments to their jobs. The record of hearings on family and medical leave indicate the powerful productive advantages of stable workplace relationships, and the comparatively small costs of guaranteeing that those relationships will not be dissolved while workers attend to pressing family health obligations or their own serious illness.

§ 825.102 When was the Act effective?

(a) The Act became effective on August 5, 1993, for most employers. If a collective bargaining agreement was in effect on that date, the Act's effective date was delayed until February 5, 1994, or the date the agreement expired, whichever date occurred sooner. This delayed effective date was applicable only to employees covered by a collective bargaining agreement that was in effect on August 5, 1993, and not, for example, to employees outside the bargaining unit. Application of FMLA to collective bargaining agreements is discussed further in § 825.700(c).

(b) The period prior to the Act's effective date must be considered in determining employer coverage and employee eligibility. For example, as discussed further below, an employer with no collective bargaining agreements in effect as of August 5, 1993, must count employees/workweeks for calendar year 1992 and calendar year 1993. If 50 or more employees were employed during 20 or more workweeks in *either* 1992 or 1993(through August 5, 1993), the employer was covered under FMLA on August 5, 1993. If not, the employer was not covered on August 5, 1993, but must continue to monitor employment levels each workweek remaining in 1993 and thereafter to determine if and when it might become covered.

§ 825.103 How did the Act affect leave in progress on, or taken before, the effective date of the Act?

(a) An eligible employee's right to take FMLA leave began on the date that the Act went into effect for the employer (*see* the discussion of differing effective dates for collective bargaining agreements in §§ 825.102(a) and 825.700(c)). Any leave taken prior to the Act's effective date may not be counted for purposes of FMLA. If leave qualifying as FMLA leave was underway prior to the effective date of the Act and continued after the Act's effective date, only that portion of leave taken on or after the Act's effective date may be counted against the employee's leave entitlement under the FMLA.

(b) If an employer-approved leave was underway when the Act took effect, no further notice would be required of the employee unless the employee requested an extension of the leave. For leave which commenced on the effective date or shortly thereafter, such notice must have been given which was practicable, considering the foreseeability of the need for leave and the effective date of the statute.

(c) Starting on the Act's effective date, an employee is entitled to FMLA leave if the reason for the leave is qualifying under the Act, even if the event occasioning the need for leave (e.g., the birth of a child) occurred before the effective date (so long as any other requirements are satisfied).

§ 825.104 What employers are covered by the Act?

(a) An employer covered by FMLA is any person engaged in commerce or in any industry or activity affecting commerce, who employs 50 or more employees for each working day during each of 20 or more calendar workweeks in the current or preceding calendar year. Employers covered by FMLA also include any person acting, directly or indirectly, in the interest of a covered employer to any of the employees of the employer, any successor in interest of a covered employer, and any public agency. Public agencies are covered employers without regard to the number of employees employed. Public as well as private elementary and secondary schools are also covered employers without regard to the number of employees employed. (See § 825.600.)

(b) The terms ''commerce'' and ''industry affecting commerce'' are

defined in accordance with section 501(1) and (3) of the Labor Management Relations Act of 1947 (LMRA) (29 U.S.C. 142 (1) and (3)), as set forth in the definitions at section 825.800 of this part. For purposes of the FMLA, employers who meet the 50-employee coverage test are deemed to be engaged in commerce or in an industry or activity affecting commerce.

(c) Normally the legal entity which employs the employee is the employer under FMLA. Applying this principle, a corporation is a single employer rather than its separate establishments or divisions.

(1) Where one corporation has an ownership interest in another corporation, it is a separate employer unless it meets the ''joint employment'' test discussed in § 825.106, or the ''integrated employer'' test contained in paragraph (c)(2) of this section.

(2) Separate entities will be deemed to be parts of a single employer for purposes of FMLA if they meet the ''integrated employer'' test. Where this test is met, the employees of all entities making up the integrated employer will be counted in determining employer coverage and employee eligibility. A determination of whether or not separate entities are an integrated employer is not determined by the application of any single criterion, but rather the entire relationship is to be reviewed in its totality. Factors considered in determining whether two or more entities are an integrated employer include:

(i) Common management;

(ii) Interrelation between operations;

(iii) Centralized control of labor relations; and

(iv) Degree of common ownership/financial control.

(d) An ''employer'' includes any person who acts directly or indirectly in the interest of an employer to any of the employer's employees. The definition of ''employer'' in section 3(d) of the Fair Labor Standards Act (FLSA), 29 U.S.C. 203(d), similarly includes any person acting directly or indirectly in the interest of an employer in relation to an employee. As under the FLSA, individuals such as corporate officers ''acting in the interest of an employer'' are individually liable for any violations of the requirements of FMLA.

§ 825.105 In determining whether an employer is covered by FMLA, what does it mean to employ 50 or more employees for each working day during each of 20 or more calendar workweeks in the current or preceding calendar year?

(a) The definition of ''employ'' for purposes of FMLA is taken from the Fair Labor Standards Act, § 3(g). The courts have made it clear that the employment relationship under the FLSA is broader than the traditional common law concept of master and servant. The difference between the employment relationship under the FLSA and that under the common law arises from the fact that the term ''employ'' as defined in the Act includes ''to suffer or permit to work''. The courts have indicated that, while ''to permit'' requires a more positive action than ''to suffer'', both terms imply much less positive action than required by the common law. Mere knowledge by an employer of work done for the employer by another is sufficient to create the employment relationship under the Act. The courts have said that there is no definition that solves all problems as to the limitations of the employer-employee relationship under the Act; and that determination of the relation cannot be based on ''isolated factors'' or upon a single characteristic or ''technical concepts'', but depends ''upon the circumstances of the whole activity'' including the underlying ''economic reality.'' In general an employee, as distinguished from an independent contractor who is engaged in a business of his/her own, is one who ''follows the usual path of an employee'' and is dependent on the business which he/she serves.

(b) Any employee whose name appears on the employer's payroll will be considered employed each working day of the calendar week, and must be counted whether or not any compensation is received for the week. However, the FMLA applies only to employees who are employed within any State of the United States, the District of Columbia or any Territory or possession of the United States. Employees who are employed outside these areas are not counted for purposes of determining employer coverage or employee eligibility.

(c) Employees on paid or unpaid leave, including FMLA leave, leaves of absence, disciplinary suspension, etc., are counted as long as the employer has a reasonable expectation that the employee will later return to active employment. If there is no employer/employee relationship (as when an employee is laid off, whether temporarily or permanently) such individual is not counted. Part-time employees, like full-time employees, are considered to be employed each working day of the calendar week, as long as they are maintained on the payroll.

(d) An employee who does not begin to work for an employer until after the first working day of a calendar week, or who terminates employment before the last working day of a calendar week, is not considered employed on each working day of that calendar week.

(e) A private employer is covered if it maintained 50 or more employees on the payroll during 20 or more calendar workweeks (not necessarily consecutive workweeks) in either the current or the preceding calendar year.

(f) Once a private employer meets the 50 employees/20 workweeks threshold, the employer remains covered until it reaches a future point where it no longer has employed 50 employees for 20 (nonconsecutive) workweeks in the current and preceding calendar year. For example, if an employer who met the 50 employees/20 workweeks test in the calendar year as of August 5, 1993, subsequently dropped below 50 employees before the end of 1993 and continued to employ fewer than 50 employees in all workweeks throughout calendar year 1994, the employer would continue to be covered throughout calendar year 1994 because it met the coverage criteria for 20 workweeks of the preceding (*i.e.,* 1993) calendar year.

§ 825.106 How is ''joint employment'' treated under FMLA?

(a) Where two or more businesses exercise some control over the work or working conditions of the employee, the businesses may be joint employers under FMLA. Joint employers may be separate and distinct entities with separate owners, managers and facilities. Where the employee performs work which simultaneously benefits two or more employers, or works for two or more employers at different times during the workweek, a joint employment relationship generally will be considered to exist in situations such as:

(1) Where there is an arrangement between employers to share an employee's services or to interchange employees;

(2) Where one employer acts directly or indirectly in the interest of the other employer in relation to the employee; or,

(3) Where the employers are not completely disassociated with respect to the employee's employment and may be deemed to share control of the employee, directly or indirectly, because one employer controls, is controlled by, or is under common control with the other employer.

(b) A determination of whether or not a joint employment relationship exists is not determined by the application of any single criterion, but rather the entire relationship is to be viewed in its totality. For example, joint employment

will ordinarily be found to exist when a temporary or leasing agency supplies employees to a second employer.

(c) In joint employment relationships, only the primary employer is responsible for giving required notices to its employees, providing FMLA leave, and maintenance of health benefits. Factors considered in determining which is the ''primary'' employer include authority/responsibility to hire and fire, assign/place the employee, make payroll, and provide employment benefits. For employees of temporary help or leasing agencies, for example, the placement agency most commonly would be the primary employer.

(d) Employees jointly employed by two employers must be counted by both employers, whether or not maintained on one of the employer's payroll, in determining employer coverage and employee eligibility. For example, an employer who jointly employs 15 workers from a leasing or temporary help agency and 40 permanent workers is covered by FMLA. An employee on leave who is working for a secondary employer is considered employed by the secondary employer, and must be counted for coverage and eligibility purposes, as long as the employer has a reasonable expectation that that employee will return to employment with that employer.

(e) Job restoration is the primary responsibility of the primary employer. The secondary employer is responsible for accepting the employee returning from FMLA leave in place of the replacement employee if the secondary employer continues to utilize an employee from the temporary or leasing agency, and the agency chooses to place the employee with the secondary employer. A secondary employer is also responsible for compliance with the prohibited acts provisions with respect to its temporary/leased employees, whether or not the secondary employer is covered by FMLA (*see* § 825.220(a)). The prohibited acts include prohibitions against interfering with an employee's attempt to exercise rights under the Act, or discharging or discriminating against an employee for opposing a practice which is unlawful under FMLA. A covered secondary employer will be responsible for compliance with *all* the provisions of the FMLA with respect to its regular, permanent workforce.

§ 825.107 What is meant by ''successor in interest''?

(a) For purposes of FMLA, in determining whether an employer is covered because it is a ''successor in interest'' to a covered employer, the factors used under Title VII of the Civil Rights Act and the Vietnam Era Veterans' Adjustment Act will be considered. However, unlike Title VII, whether the successor has notice of the employee's claim is not a consideration. Notice may be relevant, however, in determining successor liability for violations of the predecessor. The factors to be considered include:

(1) Substantial continuity of the same business operations;
(2) Use of the same plant;
(3) Continuity of the work force;
(4) Similarity of jobs and working conditions;
(5) Similarity of supervisory personnel;
(6) Similarity in machinery, equipment, and production methods;
(7) Similarity of products or services; and
(8) The ability of the predecessor to provide relief.

(b) A determination of whether or not a ''successor in interest'' exists is not determined by the application of any single criterion, but rather the entire circumstances are to be viewed in their totality.

(c) When an employer is a ''successor in interest,'' employees' entitlements are the same as if the employment by the predecessor and successor were continuous employment by a single employer. For example, the successor, whether or not it meets FMLA coverage criteria, must grant leave for eligible employees who had provided appropriate notice to the predecessor, or continue leave begun while employed by the predecessor, including maintenance of group health benefits during the leave and job restoration at the conclusion of the leave. A successor which meets FMLA's coverage criteria must count periods of employment and hours worked for the predecessor for purposes of determining employee eligibility for FMLA leave.

§ 825.108 What is a ''public agency''?

(a) An ''employer'' under FMLA includes any ''public agency,'' as defined in section 3(x) of the Fair Labor Standards Act, 29 U.S.C. 203(x). Section 3(x) of the FLSA defines ''public agency'' as the government of the United States; the government of a State or political subdivision of a State; or an agency of the United States, a State, or a political subdivision of a State, or any interstate governmental agency. ''State'' is further defined in Section 3(c) of the FLSA to include any State of the United States, the District of Columbia, or any Territory or possession of the United States.

(b) The determination of whether an entity is a ''public'' agency, as distinguished from a private employer, is determined by whether the agency has taxing authority, or whether the chief administrative officer or board, etc., is elected by the voters-at-large or their appointment is subject to approval by an elected official.

(c)(1) A State or a political subdivision of a State constitutes a single public agency and, therefore, a single employer for purposes of determining employee eligibility. For example, a State is a single employer; a county is a single employer; a city or town is a single employer. Where there is any question about whether a public entity is a public agency, as distinguished from a part of another public agency, the U.S. Bureau of the Census' ''Census of Governments'' will be determinative, except for new entities formed since the most recent publication of the ''Census.'' For new entities, the criteria used by the Bureau of Census will be used to determine whether an entity is a public agency or a part of another agency, including existence as an organized entity, governmental character, and substantial autonomy of the entity.

(2) The Census Bureau takes a census of governments at 5-year intervals. Volume I, Government Organization, contains the official counts of the number of State and local governments. It includes tabulations of governments by State, type of government, size, and county location. Also produced is a universe list of governmental units, classified according to type of government. Copies of Volume I, Government Organization, and subsequent volumes are available from the Superintendent of Documents, U.S. Government Printing Office, Washington, D.C., 20402, U.S. Department of Commerce District Offices, or can be found in Regional and selective depository libraries. For a list of all depository libraries, write to the Government Printing Office, 710 N. Capitol St., NW, Washington, D.C. 20402.

(d) All public agencies are covered by FMLA regardless of the number of employees; they are not subject to the coverage threshold of 50 employees carried on the payroll each day for 20 or more weeks in a year. However, employees of public agencies must meet all of the requirements of eligibility, including the requirement that the employer (*e.g.*, State) employ 50 employees at the worksite or within 75 miles.

§ 825.109 Are Federal agencies covered by these regulations?

(a) Most employees of the government of the United States, if they are covered by the FMLA, are covered under Title II of the FMLA (incorporated in Title V,

Chapter 63, Subchapter 5 of the United States Code) which is administered by the U.S. Office of Personnel Management (OPM). OPM has separate regulations at 5 CFR Part 630, Subpart L. In addition, employees of the Senate and House of Representatives are covered by Title V of the FMLA.

(b) The Federal Executive Branch employees within the jurisdiction of these regulations include:

(1) Employees of the Postal Service;

(2) Employees of the Postal Rate Commission;

(3) A part-time employee who does not have an established regular tour of duty during the administrative workweek; and,

(4) An employee serving under an intermittent appointment or temporary appointment with a time limitation of one year or less.

(c) Employees of other Federal executive agencies are also covered by these regulations if they are not covered by Title II of FMLA.

(d) Employees of the legislative or judicial branch of the United States are covered by these regulations only if they are employed in a unit which has employees in the competitive service. Examples include employees of the Government Printing Office and the U.S. Tax Court.

(e) For employees covered by these regulations, the U.S. Government constitutes a single employer for purposes of determining employee eligibility. These employees must meet all of the requirements for eligibility, including the requirement that the Federal Government employ 50 employees at the worksite or within 75 miles.

§ 825.110 Which employees are ''eligible'' to take leave under FMLA?

(a) An ''eligible employee'' is an employee of a covered employer who:

(1) Has been employed by the employer for at least 12 months, and

(2) Has been employed for at least 1,250 hours of service during the 12-month period immediately preceding the commencement of the leave, and

(3) Is employed at a worksite where 50 or more employees are employed by the employer within 75 miles of that worksite. (*See* § 825.105(a) regarding employees who work outside the U.S.)

(b) The 12 months an employee must have been employed by the employer need not be consecutive months. If an employee is maintained on the payroll for any part of a week, including any periods of paid or unpaid leave (sick, vacation) during which other benefits or compensation are provided by the employer (*e.g.,* workers' compensation, group health plan benefits, *etc.*), the week counts as a week of employment. For purposes of determining whether intermittent/occasional/casual employment qualifies as ''at least 12 months,'' 52 weeks is deemed to be equal to 12 months.

(c) Whether an employee has worked the minimum 1,250 hours of service is determined according to the principles established under the Fair Labor Standards Act (FLSA) for determining compensable hours of work (see 29 CFR Part 785). The determining factor is the number of hours an employee has worked for the employer within the meaning of the FLSA. The determination is not limited by methods of recordkeeping, or by compensation agreements that do not accurately reflect all of the hours an employee has worked for or been in service to the employer. Any accurate accounting of actual hours worked under FLSA's principles may be used. In the event an employer does not maintain an accurate record of hours worked by an employee, including for employees who are exempt from FLSA's requirement that a record be kept of their hours worked (*e.g.,* bona fide executive, administrative, and professional employees as defined in FLSA Regulations, 29 CFR Part 541), the employer has the burden of showing that the employee has not worked the requisite hours. In the event the employer is unable to meet this burden the employee is deemed to have met this test. See also § 825.500(e). For this purpose, full-time teachers (see § 825.800 for definition) of an elementary or secondary school system, or institution of higher education, or other educational establishment or institution are deemed to meet the 1,250 hour test. An employer must be able to clearly demonstrate that such an employee did not work 1,250 hours during the previous 12 months in order to claim that the employee is not ''eligible'' for FMLA leave.

(d) The determinations of whether an employee has worked for the employer for at least 1,250 hours in the past 12 months and has been employed by the employer for a total of at least 12 months must be made as of the date leave commences. If an employee notifies the employer of need for FMLA leave before the employee meets these eligibility criteria, the employer must either confirm the employee's eligibility based upon a projection that the employee will be eligible on the date leave would commence or must advise the employee when the eligibility requirement is met. If the employer confirms eligibility at the time the notice for leave is received, the employer may not subsequently challenge the employee's eligibility. In the latter case, if the employer does not advise the employee whether the employee is eligible as soon as practicable (*i.e.,* two business days absent extenuating circumstances) after the date employee eligibility is determined, the employee will have satisfied the notice requirements and the notice of leave is considered current and outstanding until the employer does advise. If the employer fails to advise the employee whether the employee is eligible prior to the date the requested leave is to commence, the employee will be deemed eligible. The employer may not, then, deny the leave. Where the employee does not give notice of the need for leave more than two business days prior to commencing leave, the employee will be deemed to be eligible if the employer fails to advise the employee that the employee is not eligible within two business days of receiving the employee's notice.

(e) The period prior to the FMLA's effective date must be considered in determining employee's eligibility.

(f) Whether 50 employees are employed within 75 miles to ascertain an employee's eligibility for FMLA benefits is determined when the employee gives notice of the need for leave. Whether the leave is to be taken at one time or on an intermittent or reduced leave schedule basis, once an employee is determined eligible in response to that notice of the need for leave, the employee's eligibility is not affected by any subsequent change in the number of employees employed at or within 75 miles of the employee's worksite, for that specific notice of the need for leave. Similarly, an employer may not terminate employee leave that has already started if the employee-count drops below 50. For example, if an employer employs 60 employees in August, but expects that the number of employees will drop to 40 in December, the employer must grant FMLA benefits to an otherwise eligible employee who gives notice of the need for leave in August for a period of leave to begin in December.

§ 825.111 In determining if an employee is ''eligible'' under FMLA, how is the determination made whether the employer employs 50 employees within 75 miles of the worksite where the employee needing leave is employed?

(a) Generally, a worksite can refer to either a single location or a group of contiguous locations. Structures which form a campus or industrial park, or separate facilities in proximity with one another, may be considered a single site

of employment. On the other hand, there may be several single sites of employment within a single building, such as an office building, if separate employers conduct activities within the building. For example, an office building with 50 different businesses as tenants will contain 50 sites of employment. The offices of each employer will be considered separate sites of employment for purposes of FMLA. An employee's worksite under FMLA will ordinarily be the site the employee reports to or, if none, from which the employee's work is assigned.

(1) Separate buildings or areas which are not directly connected or in immediate proximity are a single worksite if they are in reasonable geographic proximity, are used for the same purpose, and share the same staff and equipment. For example, if an employer manages a number of warehouses in a metropolitan area but regularly shifts or rotates the same employees from one building to another, the multiple warehouses would be a single worksite.

(2) For employees with no fixed worksite, *e.g.*, construction workers, transportation workers (*e.g.*, truck drivers, seamen, pilots), salespersons, etc., the ''worksite'' is the site to which they are assigned as their home base, from which their work is assigned, or to which they report. For example, if a construction company headquartered in New Jersey opened a construction site in Ohio, and set up a mobile trailer on the construction site as the company's on-site office, the construction site in Ohio would be the worksite for any employees hired locally who report to the mobile trailer/company office daily for work assignments, etc. If that construction company also sent personnel such as job superintendents, foremen, engineers, an office manager, etc., from New Jersey to the job site in Ohio, those workers sent from New Jersey continue to have the headquarters in New Jersey as their ''worksite.'' The workers who have New Jersey as their worksite would not be counted in determining eligibility of employees whose home base is the Ohio worksite, but would be counted in determining eligibility of employees whose home base is New Jersey. For transportation employees, their worksite is the terminal to which they are assigned, report for work, depart, and return after completion of a work assignment. For example, an airline pilot may work for an airline with headquarters in New York, but the pilot regularly reports for duty and originates or begins flights from the company's facilities located in an airport in Chicago and returns to Chicago at the completion of one or more flights to go off duty. The pilot's worksite is the facility in Chicago. An employee's personal residence is not a worksite in the case of employees such as salespersons who travel a sales territory and who generally leave to work and return from work to their personal residence, or employees who work at home, as under the new concept of flexiplace. Rather, their worksite is the office to which the report and from which assignments are made.

(3) For purposes of determining that employee's eligibility, when an employee is jointly employed by two or more employers (*see* § 825.106), the employee's worksite is the primary employer's office from which the employee is assigned or reports. The employee is also counted by the secondary employer to determine eligibility for the secondary employer's full-time or permanent employees.

(b) The 75-mile distance is measured by surface miles, using surface transportation over public streets, roads, highways and waterways, by the shortest route from the facility where the eligible employee needing leave is employed. Absent available surface transportation between worksites, the distance is measured by using the most frequently utilized mode of transportation (*e.g.*, airline miles).

(c) The determination of how many employees are employed within 75 miles of the worksite of an employee is based on the number of employees maintained on the payroll. Employees of educational institutions who are employed permanently or who are under contract are ''maintained on the payroll'' during any portion of the year when school is not in session. *See* § 825.105(b).

§ 825.112 Under what kinds of circumstances are employers required to grant family or medical leave?

(a) Employers covered by FMLA are required to grant leave to eligible employees:

(1) For birth of a son or daughter, and to care for the newborn child;

(2) For placement with the employee of a son or daughter for adoption or foster care;

(3) To care for the employee's spouse, son, daughter, or parent with a serious health condition; and

(4) Because of a serious health condition that makes the employee unable to perform the functions of the employee's job.

(b) The right to take leave under FMLA applies equally to male and female employees. A father, as well as a mother, can take family leave for the birth, placement for adoption or foster care of a child.

(c) Circumstances may require that FMLA leave begin before the actual date of birth of a child. An expectant mother may take FMLA leave pursuant to paragraph (a)(4) of this section before the birth of the child for prenatal care or if her condition makes her unable to work.

(d) Employers covered by FMLA are required to grant FMLA leave pursuant to paragraph (a)(2) of this section before the actual placement or adoption of a child if an absence from work is required for the placement for adoption or foster care to proceed. For example, the employee may be required to attend counselling sessions, appear in court, consult with his or her attorney or the doctor(s) representing the birth parent, or submit to a physical examination. The source of an adopted child (*e.g.*, whether from a licensed placement agency or otherwise) is not a factor in determining eligibility for leave for this purpose.

(e) Foster care is 24-hour care for children in substitution for, and away from, their parents or guardian. Such placement is made by or with the agreement of the State as a result of a voluntary agreement between the parent or guardian that the child be removed from the home, or pursuant to a judicial determination of the necessity for foster care, and involves agreement between the State and foster family that the foster family will take care of the child. Although foster care may be with relatives of the child, State action is involved in the removal of the child from parental custody.

(f) In situations where the employer/employee relationship has been interrupted, such as an employee who has been on layoff, the employee must be recalled or otherwise be re-employed before being eligible for FMLA leave. Under such circumstances, an eligible employee is immediately entitled to further FMLA leave for a qualifying reason.

(g) FMLA leave is available for treatment for substance abuse provided the conditions of § 825.114 are met. However, treatment for substance abuse does not prevent an employer from taking employment action against an employee. The employer may not take action against the employee because the employee has exercised his or her right to take FMLA leave for treatment. However, if the employer has an established policy, applied in a non-discriminatory manner that has been communicated to all employees, that provides under certain circumstances an employee may be terminated for

substance abuse, pursuant to that policy the employee may be terminated whether or not the employee is presently taking FMLA leave. An employee may also take FMLA leave to care for an immediate family member who is receiving treatment for substance abuse. The employer may not take action against an employee who is providing care for an immediate family member receiving treatment for substance abuse.

§ 825.113 What do ''spouse,'' ''parent,'' and ''son or daughter'' mean for purposes of an employee qualifying to take FMLA leave?

(a) Spouse means a husband or wife as defined or recognized under State law for purposes of marriage in the State where the employee resides, including common law marriage in States where it is recognized.

(b) Parent means a biological parent or an individual who stands or stood in loco parentis to an employee when the employee was a son or daughter as defined in (c) below. This term does not include parents ''in law''.

(c) Son or daughter means a biological, adopted, or foster child, a stepchild, a legal ward, or a child of a person standing in loco parentis, who is either under age 18, or age 18 or older and ''incapable of self-care because of a mental or physical disability.''

(1) ''Incapable of self-care'' means that the individual requires active assistance or supervision to provide daily self-care in three or more of the ''activities of daily living'' (ADLs) or ''instrumental activities of daily living'' (IADLs). Activities of daily living include adaptive activities such as caring appropriately for one's grooming and hygiene, bathing, dressing and eating. Instrumental activities of daily living include cooking, cleaning, shopping, taking public transportation, paying bills, maintaining a residence, using telephones and directories, using a post office, etc.

(2) ''Physical or mental disability'' means a physical or mental impairment that substantially limits one or more of the major life activities of an individual. Regulations at 29 CFR § 1630.2(h), (i), and (j), issued by the Equal Employment Opportunity Commission under the Americans with Disabilities Act (ADA), 42 U.S.C. 12101 *et seq.*, define these terms.

(3) Persons who are ''in loco parentis'' include those with day-to-day responsibilities to care for and financially support a child or, in the case of an employee, who had such responsibility for the employee when the employee was a child. A biological or legal relationship is not necessary.

(d) For purposes of confirmation of family relationship, the employer may require the employee giving notice of the need for leave to provide reasonable documentation or statement of family relationship. This documentation may take the form of a simple statement from the employee, or a child's birth certificate, a court document, *etc.* The employer is entitled to examine documentation such as a birth certificate, *etc.*, but the employee is entitled to the return of the official document submitted for this purpose.

§ 825.114 What is a ''serious health condition'' entitling an employee to FMLA leave?

(a) For purposes of FMLA, ''serious health condition'' entitling an employee to FMLA leave means an illness, injury, impairment, or physical or mental condition that involves:

(1) *Inpatient care* (*i.e.*, an overnight stay) in a hospital, hospice, or residential medical care facility, including any period of *incapacity* (for purposes of this section, defined to mean inability to work, attend school or perform other regular daily activities due to the serious health condition, treatment therefor, or recovery therefrom), or any subsequent treatment in connection with such inpatient care; or

(2) *Continuing treatment* by a health care provider. A serious health condition involving continuing treatment by a health care provider includes any one or more of the following:

(i) A period of *incapacity* (*i.e.*, inability to work, attend school or perform other regular daily activities due to the serious health condition, treatment therefor, or recovery therefrom) of more than three consecutive calendar days, and any subsequent treatment or period of incapacity relating to the same condition, that also involves:

(A) Treatment two or more times by a health care provider, by a nurse or physician's assistant under direct supervision of a health care provider, or by a provider of health care services (*e.g.*, physical therapist) under orders of, or on referral by, a health care provider; or

(B) Treatment by a health care provider on at least one occasion which results in a regimen of continuing treatment under the supervision of the health care provider.

(ii) Any period of incapacity due to pregnancy, or for prenatal care.

(iii) Any period of incapacity or treatment for such incapacity due to a chronic serious health condition. A chronic serious health condition is one which:

(A) Requires periodic visits for treatment by a health care provider, or by a nurse or physician's assistant under direct supervision of a health care provider;

(B) Continues over an extended period of time (including recurring episodes of a single underlying condition); and

(C) May cause episodic rather than a continuing period of incapacity (*e.g.*, asthma, diabetes, epilepsy, *etc.*).

(iv) A period of incapacity which is permanent or long-term due to a condition for which treatment may not be effective. The employee or family member must be under the continuing supervision of, but need not be receiving active treatment by, a health care provider. Examples include Alzheimer's, a severe stroke, or the terminal stages of a disease.

(v) Any period of absence to receive multiple treatments (including any period of recovery therefrom) by a health care provider or by a provider of health care services under orders of, or on referral by, a health care provider, either for restorative surgery after an accident or other injury, or for a condition that would likely result in a period of incapacity of more than three consecutive calendar days in the absence of medical intervention or treatment, such as cancer (chemotherapy, radiation, *etc.*), severe arthritis (physical therapy), kidney disease (dialysis).

(b) Treatment for purposes of paragraph (a) of this section includes (but is not limited to) examinations to determine if a serious health condition exists and evaluations of the condition. Treatment does not include routine physical examinations, eye examinations, or dental examinations. Under paragraph (a)(2)(i)(B), a regimen of continuing treatment includes, for example, a course of prescription medication (*e.g.*, an antibiotic) or therapy requiring special equipment to resolve or alleviate the health condition (*e.g.*, oxygen). A regimen of continuing treatment that includes the taking of over-the-counter medications such as aspirin, antihistamines, or salves; or bed-rest, drinking fluids, exercise, and other similar activities that can be initiated without a visit to a health care provider, is not, by itself, sufficient to constitute a regimen of continuing treatment for purposes of FMLA leave.

(c) Conditions for which cosmetic treatments are administered (such as

most treatments for acne or plastic surgery) are not ''serious health conditions'' unless inpatient hospital care is required or unless complications develop. Ordinarily, unless complications arise, the common cold, the flu, ear aches, upset stomach, minor ulcers, headaches other than migraine, routine dental or orthodontia problems, periodontal disease, *etc.*, are examples of conditions that do not meet the definition of a serious health condition and do not qualify for FMLA leave. Restorative dental or plastic surgery after an injury or removal of cancerous growths are serious health conditions provided all the other conditions of this regulation are met. Mental illness resulting from stress or allergies may be serious health conditions, but only if all the conditions of this section are met.

(d) Substance abuse may be a serious health condition if the conditions of this section are met. However, FMLA leave may only be taken for treatment for substance abuse by a health care provider or by a provider of health care services on referral by a health care provider. On the other hand, absence because of the employee's use of the substance, rather than for treatment, does not qualify for FMLA leave.

(e) Absences attributable to incapacity under paragraphs (a)(2) (ii) or (iii) qualify for FMLA leave even though the employee or the immediate family member does not receive treatment from a health care provider during the absence, and even if the absence does not last more than three days. For example, an employee with asthma may be unable to report for work due to the onset of an asthma attack or because the employee's health care provider has advised the employee to stay home when the pollen count exceeds a certain level. An employee who is pregnant may be unable to report to work because of severe morning sickness.

§ 825.115 What does it mean that ''the employee is unable to perform the functions of the position of the employee''?

An employee is ''unable to perform the functions of the position'' where the health care provider finds that the employee is unable to work at all or is unable to perform any one of the essential functions of the employee's position within the meaning of the Americans with Disabilities Act (ADA), 42 USC 12101 *et seq.*, and the regulations at 29 CFR § 1630.2(n). An employee who must be absent from work to receive medical treatment for a serious health condition is considered to be unable to perform the essential functions of the position during the absence for treatment. An employer has the option, in requiring certification from a health care provider, to provide a statement of the essential functions of the employee's position for the health care provider to review. For purposes of FMLA, the essential functions of the employee's position are to be determined with reference to the position the employee held at the time notice is given or leave commenced, whichever is earlier.

§ 825.116 What does it mean that an employee is ''needed to care for'' a family member?

(a) The medical certification provision that an employee is ''needed to care for'' a family member encompasses both physical and psychological care. It includes situations where, for example, because of a serious health condition, the family member is unable to care for his or her own basic medical, hygienic, or nutritional needs or safety, or is unable to transport himself or herself to the doctor, etc. The term also includes providing psychological comfort and reassurance which would be beneficial to a child, spouse or parent with a serious health condition who is receiving inpatient or home care.

(b) The term also includes situations where the employee may be needed to fill in for others who are caring for the family member, or to make arrangements for changes in care, such as transfer to a nursing home.

(c) An employee's intermittent leave or a reduced leave schedule necessary to care for a family member includes not only a situation where the family member's condition itself is intermittent, but also where the employee is only needed intermittently—such as where other care is normally available, or care responsibilities are shared with another member of the family or a third party.

§ 825.117 For an employee seeking intermittent FMLA leave or leave on a reduced leave schedule, what is meant by ''the medical necessity for'' such leave?

For intermittent leave or leave on a reduced leave schedule, there must be a medical need for leave (as distinguished from voluntary treatments and procedures) and it must be that such medical need can be best accommodated through an intermittent or reduced leave schedule. The treatment regimen and other information described in the certification of a serious health condition (see § 825.306) meets the requirement for certification of the medical necessity of intermittent leave or leave on a reduced leave schedule. Employees needing intermittent FMLA leave or leave on a reduced leave schedule must attempt to schedule their leave so as not to disrupt the employer's operations. In addition, an employer may assign an employee to an alternative position with equivalent pay and benefits that better accommodates the employee's intermittent or reduced leave schedule.

§ 825.118 What is a ''health care provider''?

(a) The Act defines ''health care provider'' as:

(1) A doctor of medicine or osteopathy who is authorized to practice medicine or surgery (as appropriate) by the State in which the doctor practices; or

(2) Any other person determined by the Secretary to be capable of providing health care services.

(b) Others ''capable of providing health care services'' include only:

(1) Podiatrists, dentists, clinical psychologists, optometrists, and chiropractors (limited to treatment consisting of manual manipulation of the spine to correct a subluxation as demonstrated by X-ray to exist) authorized to practice in the State and performing within the scope of their practice as defined under State law;

(2) Nurse practitioners, nurse-midwives and clinical social workers who are authorized to practice under State law and who are performing within the scope of their practice as defined under State law;

(3) Christian Science practitioners listed with the First Church of Christ, Scientist in Boston, Massachusetts. Where an employee or family member is receiving treatment from a Christian Science practitioner, an employee may not object to any requirement from an employer that the employee or family member submit to examination (though not treatment) to obtain a second or third certification from a health care provider other than a Christian Science practitioner except as otherwise provided under applicable State or local law or collective bargaining agreement.

(4) Any health care provider from whom an employer or the employer's group health plan's benefits manager will accept certification of the existence of a serious health condition to substantiate a claim for benefits; and

(5) A health care provider listed above who practices in a country other than the United States, who is authorized to practice in accordance with the law of that country, and who is performing within the scope of his or her practice as defined under such law.

(c) The phrase ''authorized to practice in the State'' as used in this section means that the provider must be

authorized to diagnose and treat physical or mental health conditions without supervision by a doctor or other health care provider.

Subpart B—What Leave Is an Employee Entitled to Take Under the Family and Medical Leave Act?

§ 825.200 How much leave may an employee take?

(a) An eligible employee's FMLA leave entitlement is limited to a total of 12 workweeks of leave during any 12-month period for any one, or more, of the following reasons:

(1) The birth of the employee's son or daughter, and to care for the newborn child;

(2) The placement with the employee of a son or daughter for adoption or foster care, and to care for the newly placed child;

(3) To care for the employee's spouse, son, daughter, or parent with a serious health condition; and,

(4) Because of a serious health condition that makes the employee unable to perform one or more of the essential functions of his or her job.

(b) An employer is permitted to choose any one of the following methods for determining the ''12-month period'' in which the 12 weeks of leave entitlement occurs:

(1) The calendar year;

(2) Any fixed 12-month ''leave year,'' such as a fiscal year, a year required by State law, or a year starting on an employee's ''anniversary'' date;

(3) The 12-month period measured forward from the date any employee's first FMLA leave begins; or,

(4) A ''rolling'' 12-month period measured backward from the date an employee uses any FMLA leave (except that such measure may not extend back before August 5, 1993).

(c) Under methods in paragraphs (b)(1) and (b)(2) of this section an employee would be entitled to up to 12 weeks of FMLA leave at any time in the fixed 12-month period selected. An employee could, therefore, take 12 weeks of leave at the end of the year and 12 weeks at the beginning of the following year. Under the method in paragraph (b)(3) of this section, an employee would be entitled to 12 weeks of leave during the year beginning on the first date FMLA leave is taken; the next 12-month period would begin the first time FMLA leave is taken after completion of any previous 12-month period. Under the method in paragraph (b)(4) of this section, the ''rolling'' 12-month period, each time an employee takes FMLA leave the remaining leave entitlement would be any balance of the 12 weeks which has not been used during the immediately preceding 12 months. For example, if an employee has taken eight weeks of leave during the past 12 months, an additional four weeks of leave could be taken. If an employee used four weeks beginning February 1, 1994, four weeks beginning June 1, 1994, and four weeks beginning December 1, 1994, the employee would not be entitled to any additional leave until February 1, 1995. However, beginning on February 1, 1995, the employee would be entitled to four weeks of leave, on June 1 the employee would be entitled to an additional four weeks, etc.

(d)(1) Employers will be allowed to choose any one of the alternatives in paragraph (b) of this section provided the alternative chosen is applied consistently and uniformly to all employees. An employer wishing to change to another alternative is required to give at least 60 days notice to all employees, and the transition must take place in such a way that the employees retain the full benefit of 12 weeks of leave under whichever method affords the greatest benefit to the employee. Under no circumstances may a new method be implemented in order to avoid the Act's leave requirements.

(2) An exception to this required uniformity would apply in the case of a multi-State employer who has eligible employees in a State which has a family and medical leave statute. The State may require a single method of determining the period during which use of the leave entitlement is measured. This method may conflict with the method chosen by the employer to determine ''any 12 months'' for purposes of the Federal statute. The employer may comply with the State provision for all employees employed within that State, and uniformly use another method provided by this regulation for all other employees.

(e) If an employer fails to select one of the options in paragraph (b) of this section for measuring the 12-month period, the option that provides the most beneficial outcome for the employee will be used. The employer may subsequently select an option only by providing the 60-day notice to all employees of the option the employer intends to implement. During the running of the 60-day period any other employee who needs FMLA leave may use the option providing the most beneficial outcome to that employee. At the conclusion of the 60-day period the employer may implement the selected option.

(f) For purposes of determining the amount of leave used by an employee, the fact that a holiday may occur within the week taken as FMLA leave has no effect; the week is counted as a week of FMLA leave. However, if for some reason the employer's business activity has temporarily ceased and employees generally are not expected to report for work for one or more weeks (*e.g.*, a school closing two weeks for the Christmas/New Year holiday or the summer vacation or an employer closing the plant for retooling or repairs), the days the employer's activities have ceased do *not* count against the employee's FMLA leave entitlement. Methods for determining an employee's 12-week leave entitlement are also described in § 825.205.

§ 825.201 If leave is taken for the birth of a child, or for placement of a child for adoption or foster care, when must the leave be concluded?

An employee's entitlement to leave for a birth or placement for adoption or foster care expires at the end of the 12-month period beginning on the date of the birth or placement, unless state law allows, or the employer permits, leave to be taken for a longer period. Any such FMLA leave must be concluded within this one-year period. However, see § 825.701 regarding non-FMLA leave which may be available under applicable State laws.

§ 825.202 How much leave may a husband and wife take if they are employed by the same employer?

(a) A husband and wife who are eligible for FMLA leave and are employed by the same covered employer may be limited to a combined total of 12 weeks of leave during any 12-month period if the leave is taken:

(1) for birth of the employee's son or daughter or to care for the child after birth;

(2) for placement of a son or daughter with the employee for adoption or foster care, or to care for the child after placement; or

(3) to care for the employee's parent with a serious health condition.

(b) This limitation on the total weeks of leave applies to leave taken for the reasons specified in paragraph (a) of this section as long as a husband and wife are employed by the ''same employer.'' It would apply, for example, even though the spouses are employed at two different worksites of an employer located more than 75 miles from each other, or by two different operating divisions of the same company. On the other hand, if one spouse is ineligible for FMLA leave, the other spouse would be entitled to a full 12 weeks of FMLA leave.

(c) Where the husband and wife both use a portion of the total 12-week FMLA leave entitlement for one of the purposes in paragraph (a) of this section, the husband and wife would each be entitled to the difference between the amount he or she has taken individually and 12 weeks for FMLA leave for a purpose other than those contained in paragraph (a) of this section. For example, if each spouse took 6 weeks of leave to care for a healthy, newborn child, each could use an additional 6 weeks due to his or her own serious health condition or to care for a child or parent with a serious health condition. Note, too, that many State pregnancy disability laws specify a period of disability either before or after the birth of a child; such periods would also be considered FMLA leave for a serious health condition of the mother, and would not be subject to the combined limit.

§ 825.203 Does FMLA leave have to be taken all at once, or can it be taken in parts?

(a) FMLA leave may be taken ''intermittently or on a reduced leave schedule'' under certain circumstances. Intermittent leave is FMLA leave taken in separate blocks of time due to a single qualifying reason. A reduced leave schedule is a leave schedule that reduces an employee's usual number of working hours per workweek, or hours per workday. A reduced leave schedule is a change in the employee's schedule for a period of time, normally from full-time to part-time.

(b) When leave is taken after the birth or placement of a child for adoption or foster care, an employee may take leave intermittently or on a reduced leave schedule only if the employer agrees. Such a schedule reduction might occur, for example, where an employee, with the employer's agreement, works part-time after the birth of a child, or takes leave in several segments. The employer's agreement is not required, however, for leave during which the mother has a serious health condition in connection with the birth of her child or if the newborn child has a serious health condition.

(c) Leave may be taken intermittently or on a reduced leave schedule when medically necessary for planned and/or unanticipated medical treatment of a related serious health condition by or under the supervision of a health care provider, or for recovery from treatment or recovery from a serious health condition. It may also be taken to provide care or psychological comfort to an immediate family member with a serious health condition.

(1) Intermittent leave may be taken for a serious health condition which requires treatment by a health care provider periodically, rather than for one continuous period of time, and may include leave of periods from an hour or more to several weeks. Examples of intermittent leave would include leave taken on an occasional basis for medical appointments, or leave taken several days at a time spread over a period of six months, such as for chemotherapy. A pregnant employee may take leave intermittently for prenatal examinations or for her own condition, such as for periods of severe morning sickness. An example of an employee taking leave on a reduced leave schedule is an employee who is recovering from a serious health condition and is not strong enough to work a full-time schedule.

(2) Intermittent or reduced schedule leave may be taken for absences where the employee or family member is incapacitated or unable to perform the essential functions of the position because of a chronic serious health condition even if he or she does not receive treatment by a health care provider.

(d) There is no limit on the size of an increment of leave when an employee takes intermittent leave or leave on a reduced leave schedule. However, an employer may limit leave increments to the shortest period of time that the employer's payroll system uses to account for absences or use of leave, provided it is one hour or less. For example, an employee might take two hours off for a medical appointment, or might work a reduced day of four hours over a period of several weeks while recuperating from an illness. An employee may not be required to take more FMLA leave than necessary to address the circumstance that precipitated the need for the leave, except as provided in §§ 825.601 and 825.602.

§ 825.204 May an employer transfer an employee to an ''alternative position'' in order to accommodate intermittent leave or a reduced leave schedule?

(a) If an employee needs intermittent leave or leave on a reduced leave schedule that is foreseeable based on planned medical treatment for the employee or a family member, including during a period of recovery from a serious health condition, or if the employer agrees to permit intermittent or reduced schedule leave for the birth of a child or for placement of a child for adoption or foster care, the employer may require the employee to transfer temporarily, during the period the intermittent or reduced leave schedule is required, to an available alternative position for which the employee is qualified and which better accommodates recurring periods of leave than does the employee's regular position. See § 825.601 for special rules applicable to instructional employees of schools.

(b) Transfer to an alternative position may require compliance with any applicable collective bargaining agreement, federal law (such as the Americans with Disabilities Act), and State law. Transfer to an alternative position may include altering an existing job to better accommodate the employee's need for intermittent or reduced leave.

(c) The alternative position must have equivalent pay and benefits. An alternative position for these purposes does not have to have equivalent duties. The employer may increase the pay and benefits of an existing alternative position, so as to make them equivalent to the pay and benefits of the employee's regular job. The employer may also transfer the employee to a part-time job with the same hourly rate of pay and benefits, provided the employee is not required to take more leave than is medically necessary. For example, an employee desiring to take leave in increments of four hours per day could be transferred to a half-time job, or could remain in the employee's same job on a part-time schedule, paying the same hourly rate as the employee's previous job and enjoying the same benefits. The employer may not eliminate benefits which otherwise would not be provided to part-time employees; however, an employer may proportionately reduce benefits such as vacation leave where an employer's normal practice is to base such benefits on the number of hours worked.

(d) An employer may not transfer the employee to an alternative position in order to discourage the employee from taking leave or otherwise work a hardship on the employee. For example, a white collar employee may not be assigned to perform laborer's work; an employee working the day shift may not be reassigned to the graveyard shift; an employee working in the headquarters facility may not be reassigned to a branch a significant distance away from the employee's normal job location. Any such attempt on the part of the employer to make such a transfer will be held to be contrary to the prohibited acts of the FMLA.

(e) When an employee who is taking leave intermittently or on a reduced leave schedule and has been transferred to an alternative position, no longer

needs to continue on leave and is able to return to full-time work, the employee must be placed in the same or equivalent job as the job he/she left when the leave commenced. An employee may not be required to take more leave than necessary to address the circumstance that precipitated the need for leave.

§ 825.205 How does one determine the amount of leave used where an employee takes leave intermittently or on a reduced leave schedule?

(a) If an employee takes leave on an intermittent or reduced leave schedule, only the amount of leave actually taken may be counted toward the 12 weeks of leave to which an employee is entitled. For example, if an employee who normally works five days a week takes off one day, the employee would use 1/5 of a week of FMLA leave. Similarly, if a full-time employee who normally works 8-hour days works 4-hour days under a reduced leave schedule, the employee would use 1/2 week of FMLA leave each week.

(b) Where an employee normally works a part-time schedule or variable hours, the amount of leave to which an employee is entitled is determined on a pro rata or proportional basis by comparing the new schedule with the employee's normal schedule. For example, if an employee who normally works 30 hours per week works only 20 hours a week under a reduced leave schedule, the employee's ten hours of leave would constitute one-third of a week of FMLA leave for each week the employee works the reduced leave schedule.

(c) If an employer has made a permanent or long-term change in the employee's schedule (for reasons other than FMLA, and prior to the notice of need for FMLA leave), the hours worked under the new schedule are to be used for making this calculation.

(d) If an employee's schedule varies from week to week, a weekly average of the hours worked over the 12 weeks prior to the beginning of the leave period would be used for calculating the employee's normal workweek.

§ 825.206 May an employer deduct hourly amounts from an employee's salary, when providing unpaid leave under FMLA, without affecting the employee's qualification for exemption as an executive, administrative, or professional employee, or when utilizing the fluctuating workweek method for payment of overtime, under the Fair Labor Standards Act?

(a) Leave taken under FMLA may be unpaid. If an employee is otherwise exempt from minimum wage and overtime requirements of the Fair Labor Standards Act (FLSA) as a salaried executive, administrative, or professional employee (under regulations issued by the Secretary), 29 CFR Part 541, providing unpaid FMLA-qualifying leave to such an employee will not cause the employee to lose the FLSA exemption. This means that under regulations currently in effect, where an employee meets the specified duties test, is paid on a salary basis, and is paid a salary of at least the amount specified in the regulations, the employer may make deductions from the employee's salary for any hours taken as intermittent or reduced FMLA leave within a workweek, without affecting the exempt status of the employee. The fact that an employer provides FMLA leave, whether paid or unpaid, and maintains records required by this part regarding FMLA leave, will not be relevant to the determination whether an employee is exempt within the meaning of 29 CFR Part 541.

(b) For an employee paid in accordance with the fluctuating workweek method of payment for overtime (see 29 CFR 778.114), the employer, *during the period* in which intermittent or reduced schedule FMLA leave is scheduled to be taken, may compensate an employee on an hourly basis and pay only for the hours the employee works, including time and one-half the employee's regular rate for overtime hours. The change to payment on an hourly basis would include the entire period during which the employee is taking intermittent leave, including weeks in which no leave is taken. The hourly rate shall be determined by dividing the employee's weekly salary by the employee's normal or average schedule of hours worked during weeks in which FMLA leave is not being taken. If an employer chooses to follow this exception from the fluctuating workweek method of payment, the employer must do so uniformly, with respect to all employees paid on a fluctuating workweek basis for whom FMLA leave is taken on an intermittent or reduced leave schedule basis. If an employer does not elect to convert the employee's compensation to hourly pay, no deduction may be taken for FMLA leave absences. Once the need for intermittent or reduced scheduled leave is over, the employee may be restored to payment on a fluctuating work week basis.

(c) This special exception to the ''salary basis'' requirements of the FLSA exemption or fluctuating workweek payment requirements applies only to employees of covered employers who are eligible for FMLA leave, and to leave which qualifies as (one of the four types of) FMLA leave. Hourly or other deductions which are not in accordance with 29 CFR Part 541 or 29 CFR § 778.114 may not be taken, for example, from the salary of an employee who works for an employer with fewer than 50 employees, or where the employee has not worked long enough to be eligible for FMLA leave without potentially affecting the employee's eligibility for exemption. Nor may deductions which are not permitted by 29 CFR Part 541 or 29 CFR § 778.114 be taken from such an employee's salary for any leave which does not qualify as FMLA leave, for example, deductions from an employee's pay for leave required under State law or under an employer's policy or practice for a reason which does not qualify as FMLA leave, *e.g.*, leave to care for a grandparent or for a medical condition which does not qualify as a serious health condition; or for leave which is more generous than provided by FMLA, such as leave in excess of 12 weeks in a year. Employers may comply with State law or the employer's own policy/practice under these circumstances and maintain the employee's eligibility for exemption or for the fluctuating workweek method of pay by not taking hourly deductions from the employee's pay, in accordance with FLSA requirements, or may take such deductions, treating the employee as an ''hourly'' employee and pay overtime premium pay for hours worked over 40 in a workweek.

§ 825.207 Is FMLA leave paid or unpaid?

(a) Generally, FMLA leave is unpaid. However, under the circumstances described in this section, FMLA permits an eligible employee to choose to substitute paid leave for FMLA leave. If an employee does not choose to substitute accrued paid leave, the employer may require the employee to substitute accrued paid leave for FMLA leave.

(b) Where an employee has earned or accrued paid vacation, personal or family leave, that paid leave may be substituted for all or part of any (otherwise) unpaid FMLA leave relating to birth, placement of a child for adoption or foster care, or care for a spouse, child or parent who has a serious health condition. The term ''family leave'' as used in FMLA refers to paid leave provided by the employer covering the particular circumstances for which the employee seeks leave for either the birth of a child and to care for such child, placement of a child for adoption or foster care, or care for a spouse, child or parent with a serious health condition. For example, if the

employer's leave plan allows use of family leave to care for a child but not for a parent, the employer is not required to allow accrued family leave to be substituted for FMLA leave used to care for a parent.

(c) Substitution of paid accrued vacation, personal, or medical/sick leave may be made for any (otherwise) unpaid FMLA leave needed to care for a family member or the employee's own serious health condition. Substitution of paid sick/medical leave may be elected to the extent the circumstances meet the employer's usual requirements for the use of sick/medical leave. An employer is not required to allow substitution of paid sick or medical leave for unpaid FMLA leave ''in any situation'' where the employer's uniform policy would not normally allow such paid leave. An employee, therefore, has a right to substitute paid medical/sick leave to care for a seriously ill family member only if the employer's leave plan allows paid leave to be used for that purpose. Similarly, an employee does not have a right to substitute paid medical/sick leave for a serious health condition which is not covered by the employer's leave plan.

(d)(1) Disability leave for the birth of a child would be considered FMLA leave for a serious health condition and counted in the 12 weeks of leave permitted under FMLA. Because the leave pursuant to a temporary disability benefit plan is not unpaid, the provision for substitution of paid leave is inapplicable. However, the employer may designate the leave as FMLA leave and count the leave as running concurrently for purposes of both the benefit plan and the FMLA leave entitlement. If the requirements to qualify for payments pursuant to the employer's temporary disability plan are more stringent than those of FMLA, the employee must meet the more stringent requirements of the plan, or may choose not to meet the requirements of the plan and instead receive no payments from the plan and use unpaid FMLA leave or substitute available accrued paid leave.

(2) The Act provides that a serious health condition may result from injury to the employee ''on or off'' the job. Either the employee or the employer may choose to have the employee's FMLA 12-week leave entitlement run concurrently with a workers' compensation absence when the injury is one that meets the criteria for a serious health condition. As the workers' compensation absence is not unpaid leave, the provision for substitution of the employee's accrued paid leave is not applicable. However, if the health care provider treating the employee for the workers' compensation injury certifies the employee is able to return to a ''light duty job'' but is unable to return to the same or equivalent job, the employee may decline the employer's offer of a ''light duty job''. As a result the employee may lose workers' compensation payments, but is entitled to remain on unpaid FMLA leave until the 12-week entitlement is exhausted. As of the date workers' compensation benefits cease, the substitution provision becomes applicable and either the employee may elect or the employer may require the use of accrued paid leave. *See* also §§ 825.210(f), 825.216(d), 825.220(d), 825.307(a)(1) and 825.702(d) (1) and (2) regarding the relationship between workers' compensation absences and FMLA leave.

(e) Paid vacation or personal leave, including leave earned or accrued under plans allowing ''paid time off,'' may be substituted, at either the employee's or the employer's option, for any qualified FMLA leave. No limitations may be placed by the employer on substitution of paid vacation or personal leave for these purposes.

(f) If neither the employee nor the employer elects to substitute paid leave for unpaid FMLA leave under the above conditions and circumstances, the employee will remain entitled to all the paid leave which is earned or accrued under the terms of the employer's plan.

(g) If an employee uses paid leave under circumstances which do not qualify as FMLA leave, the leave will not count against the 12 weeks of FMLA leave to which the employee is entitled. For example, paid sick leave used for a medical condition which is not a serious health condition does not count against the 12 weeks of FMLA leave entitlement.

(h) When an employee or employer elects to substitute paid leave (of any type) for unpaid FMLA leave under circumstances permitted by these regulations, and the employer's procedural requirements for taking that kind of leave are less stringent than the requirements of FMLA (*e.g.*, notice or certification requirements), only the less stringent requirements may be imposed. An employee who complies with an employer's less stringent leave plan requirements in such cases may not have leave for an FMLA purpose delayed or denied on the grounds that the employee has not complied with stricter requirements of FMLA. However, where accrued paid vacation or personal leave is substituted for unpaid FMLA leave for a serious health condition, an employee may be required to comply with any less stringent medical certification requirements of the employer's sick leave program. *See* §§ 825.302(g), 825.305(e) and 825.306(c).

(i) Section 7(o) of the Fair Labor Standards Act (FLSA) permits public employers under prescribed circumstances to substitute compensatory time off accrued at one and one-half hours for each overtime hour worked in lieu of paying cash to an employee when the employee works overtime hours as prescribed by the Act. There are limits to the amounts of hours of compensatory time an employee may accumulate depending upon whether the employee works in fire protection or law enforcement (480 hours) or elsewhere for a public agency (240 hours). Compensatory time off is not a form of accrued paid leave that an employer may require the employee to substitute for unpaid FMLA leave. The employee may request to use his/her balance of compensatory time for an FMLA reason. If the employer permits the accrual to be used in compliance with regulations, 29 CFR 553.25, the absence which is paid from the employee's accrued compensatory time ''account'' may not be counted against the employee's FMLA leave entitlement.

§ 825.208 Under what circumstances may an employer designate leave, paid or unpaid, as FMLA leave and, as a result, count it against the employee's total FMLA leave entitlement?

(a) In all circumstances, it is the employer's responsibility to designate leave, paid or unpaid, as FMLA-qualifying, and to give notice of the designation to the employee as provided in this section. In the case of intermittent leave or leave on a reduced schedule, only one such notice is required unless the circumstances regarding the leave have changed. The employer's designation decision must be based only on information received from the employee or the employee's spokesperson (*e.g.*, if the employee is incapacitated, the employee's spouse, adult child, parent, doctor, etc., may provide notice to the employer of the need to take FMLA leave). In any circumstance where the employer does not have sufficient information about the reason for an employee's use of paid leave, the employer should inquire further of the employee or the spokesperson to ascertain whether the paid leave is potentially FMLA-qualifying.

(1) An employee giving notice of the need for unpaid FMLA leave must explain the reasons for the needed leave so as to allow the employer to determine that the leave qualifies under the Act. If

the employee fails to explain the reasons, leave may be denied. In many cases, in explaining the reasons for a request to use paid leave, especially when the need for the leave was unexpected or unforeseen, an employee will provide sufficient information for the employer to designate the paid leave as FMLA leave. An employee using accrued paid leave, especially vacation or personal leave, may in some cases not spontaneously explain the reasons or their plans for using their accrued leave.

(2) As noted in § 825.302(c), an employee giving notice of the need for unpaid FMLA leave does not need to expressly assert rights under the Act or even mention the FMLA to meet his or her obligation to provide notice, though the employee would need to state a qualifying reason for the needed leave. An employee requesting or notifying the employer of an intent to use accrued paid leave, even if for a purpose covered by FMLA, would not need to assert such right either. However, if an employee requesting to use paid leave for an FMLA-qualifying purpose does not explain the reason for the leave—consistent with the employer's established policy or practice—and the employer denies the employee's request, the employee will need to provide sufficient information to establish an FMLA-qualifying reason for the needed leave so that the employer is aware of the employee's entitlement (i.e., that the leave may not be denied) and, then, may designate that the paid leave be appropriately counted against (substituted for) the employee's 12-week entitlement. Similarly, an employee using accrued paid vacation leave who seeks an extension of unpaid leave for an FMLA-qualifying purpose will need to state the reason. If this is due to an event which occurred during the period of paid leave, the employer may count the leave used after the FMLA-qualifying event against the employee's 12-week entitlement.

(b)(1) Once the employer has acquired knowledge that the leave is being taken for an FMLA required reason, the employer must promptly (within two business days absent extenuating circumstances) notify the employee that the paid leave is designated and will be counted as FMLA leave. If there is a dispute between an employer and an employee as to whether paid leave qualifies as FMLA leave, it should be resolved through discussions between the employee and the employer. Such discussions and the decision must be documented.

(2) The employer's notice to the employee that the leave has been designated as FMLA leave may be orally or in writing. If the notice is oral, it shall be confirmed in writing, no later than the following payday (unless the payday is less than one week after the oral notice, in which case the notice must be no later than the subsequent payday). The written notice may be in any form, including a notation on the employee's pay stub.

(c) If the employer requires paid leave to be substituted for unpaid leave, or that paid leave taken under an existing leave plan be counted as FMLA leave, this decision must be made by the employer within two business days of the time the employee gives notice of the need for leave, or, where the employer does not initially have sufficient information to make a determination, when the employer determines that the leave qualifies as FMLA leave if this happens later. The employer's designation must be made before the leave starts, unless the employer does not have sufficient information as to the employee's reason for taking the leave until after the leave commenced. If the employer has the requisite knowledge to make a determination that the paid leave is for an FMLA reason at the time the employee either gives notice of the need for leave or commences leave and fails to designate the leave as FMLA leave (and so notify the employee in accordance with paragraph (b)), the employer may not designate leave as FMLA leave retroactively, and may designate only prospectively as of the date of notification to the employee of the designation. In such circumstances, the employee is subject to the full protections of the Act, but none of the absence preceding the notice to the employee of the designation may be counted against the employee's 12-week FMLA leave entitlement.

(d) If the employer learns that leave is for an FMLA purpose after leave has begun, such as when an employee gives notice of the need for an extension of the paid leave with unpaid FMLA leave, the entire or some portion of the paid leave period may be retroactively counted as FMLA leave, to the extent that the leave period qualified as FMLA leave. For example, an employee is granted two weeks paid vacation leave for a skiing trip. In mid-week of the second week, the employee contacts the employer for an extension of leave as unpaid leave and advises that at the beginning of the second week of paid vacation leave the employee suffered a severe accident requiring hospitalization. The employer may notify the employee that both the extension and the second week of paid vacation leave (from the date of the injury) is designated as FMLA leave. On the other hand, when the employee takes sick leave that turns into a serious health condition (*e.g.*, bronchitis that turns into bronchial pneumonia) and the employee gives notice of the need for an extension of leave, the entire period of the serious health condition may be counted as FMLA leave.

(e) Employers may not designate leave as FMLA leave after the employee has returned to work with two exceptions:

(1) If the employee was absent for an FMLA reason and the employer did not learn the reason for the absence until the employee's return (*e.g.*, where the employee was absent for only a brief period), the employer may, upon the employee's return to work, promptly (within two business days of the employee's return to work) designate the leave retroactively with appropriate notice to the employee. If leave is taken for an FMLA reason and has not been so designated by the employer, but the employee desires that the leave be counted as FMLA leave, the employee must notify the employer within two business days of returning to work that the leave was for an FMLA reason. In the absence of such timely notification by the employee, the employee may not subsequently assert FMLA protections for the absence.

(2) If the employer knows the reason for the leave but has not been able to confirm that the leave qualifies under FMLA, or where the employer has requested medical certification which has not yet been received or the parties are in the process of obtaining a second or third medical opinion, the employer should make a preliminary designation, and so notify the employee, at the time leave begins, or as soon as the reason for the leave becomes known. Upon receipt of the requisite information from the employee or of the medical certification which confirms the leave is for an FMLA reason, the preliminary designation becomes final. If the medical certifications fail to confirm that the reason for the absence was an FMLA reason, the employer must withdraw the designation (with written notice to the employee).

§ 825.209 Is an employee entitled to benefits while using FMLA leave?

(a) During any FMLA leave, an employer must maintain the employee's coverage under any group health plan (as defined in the Internal Revenue Code of 1986 at 26 U.S.C. 5000(b)(1)) on the same conditions as coverage would have been provided if the employee had been continuously employed during the entire leave period. All employers covered by FMLA, including public

agencies, are subject to the Act's requirements to maintain health coverage. The definition of ''group health plan'' is set forth in § 825.800. For purposes of FMLA, the term ''group health plan'' shall not include an insurance program providing health coverage under which employees purchase individual policies from insurers provided that:

(1) no contributions are made by the employer;

(2) participation in the program is completely voluntary for employees;

(3) the sole functions of the employer with respect to the program are, without endorsing the program, to permit the insurer to publicize the program to employees, to collect premiums through payroll deductions and to remit them to the insurer;

(4) the employer receives no consideration in the form of cash or otherwise in connection with the program, other than reasonable compensation, excluding any profit, for administrative services actually rendered in connection with payroll deduction; and,

(5) the premium charged with respect to such coverage does not increase in the event the employment relationship terminates.

(b) The same group health plan benefits provided to an employee prior to taking FMLA leave must be maintained during the FMLA leave. For example, if family member coverage is provided to an employee, family member coverage must be maintained during the FMLA leave. Similarly, benefit coverage during FMLA leave for medical care, surgical care, hospital care, dental care, eye care, mental health counseling, substance abuse treatment, etc., must be maintained during leave if provided in an employer's group health plan, including a supplement to a group health plan, whether or not provided through a flexible spending account or other component of a cafeteria plan.

(c) If an employer provides a new health plan or benefits or changes health benefits or plans while an employee is on FMLA leave, the employee is entitled to the new or changed plan/benefits to the same extent as if the employee were not on leave. For example, if an employer changes a group health plan so that dental care becomes covered under the plan, an employee on FMLA leave must be given the same opportunity as other employees to receive (or obtain) the dental care coverage. Any other plan changes (*e.g.*, in coverage, premiums, deductibles, *etc.*) which apply to all employees of the workforce would also apply to an employee on FMLA leave.

(d) Notice of any opportunity to change plans or benefits must also be given to an employee on FMLA leave. If the group health plan permits an employee to change from single to family coverage upon the birth of a child or otherwise add new family members, such a change in benefits must be made available while an employee is on FMLA leave. If the employee requests the changed coverage it must be provided by the employer.

(e) An employee may choose not to retain group health plan coverage during FMLA leave. However, when an employee returns from leave, the employee is entitled to be reinstated on the same terms as prior to taking the leave, including family or dependent coverages, without any qualifying period, physical examination, exclusion of pre- existing conditions, etc. *See* § 825.212(b).

(f) Except as required by the Consolidated Omnibus Budget Reconciliation Act of 1986 (COBRA) and for ''key'' employees (as discussed below), an employer's obligation to maintain health benefits during leave (and to restore the employee to the same or equivalent employment) under FMLA ceases if and when the employment relationship would have terminated if the employee had not taken FMLA leave (e.g., if the employee's position is eliminated as part of a nondiscriminatory reduction in force and the employee would not have been transferred to another position); an employee informs the employer of his or her intent not to return from leave (including before starting the leave if the employer is so informed before the leave starts); or the employee fails to return from leave or continues on leave after exhausting his or her FMLA leave entitlement in the 12-month period.

(g) If a ''key employee'' (see § 825.218) does not return from leave when notified by the employer that substantial or grievous economic injury will result from his or her reinstatement, the employee's entitlement to group health plan benefits continues unless and until the employee advises the employer that the employee does not desire restoration to employment at the end of the leave period, or FMLA leave entitlement is exhausted, or reinstatement is actually denied.

(h) An employee's entitlement to benefits other than group health benefits during a period of FMLA leave (e.g., holiday pay) is to be determined by the employer's established policy for providing such benefits when the employee is on other forms of leave (paid or unpaid, as appropriate).

§ 825.210 How may employees on FMLA leave pay their share of group health benefit premiums?

(a) Group health plan benefits must be maintained on the same basis as coverage would have been provided if the employee had been continuously employed during the FMLA leave period. Therefore, any share of group health plan premiums which had been paid by the employee prior to FMLA leave must continue to be paid by the employee during the FMLA leave period. If premiums are raised or lowered, the employee would be required to pay the new premium rates. Maintenance of health insurance policies which are not a part of the employer's group health plan, as described in § 825.209(a)(1), are the sole responsibility of the employee. The employee and the insurer should make necessary arrangements for payment of premiums during periods of unpaid FMLA leave.

(b) If the FMLA leave is substituted paid leave, the employee's share of premiums must be paid by the method normally used during any paid leave, presumably as a payroll deduction.

(c) If FMLA leave is unpaid, the employer has a number of options for obtaining payment from the employee. The employer may require that payment be made to the employer or to the insurance carrier, but no additional charge may be added to the employee's premium payment for administrative expenses. The employer may require employees to pay their share of premium payments in any of the following ways:

(1) Payment would be due at the same time as it would be made if by payroll deduction;

(2) Payment would be due on the same schedule as payments are made under COBRA;

(3) Payment would be prepaid pursuant to a cafeteria plan at the employee's option;

(4) The employer's existing rules for payment by employees on ''leave without pay'' would be followed, provided that such rules do not require prepayment (*i.e.*, prior to the commencement of the leave) of the premiums that will become due during a period of unpaid FMLA leave or payment of higher premiums than if the employee had continued to work instead of taking leave; or,

(5) Another system voluntarily agreed to between the employer and the employee, which may include prepayment of premiums (*e.g.*, through increased payroll deductions when the need for the FMLA leave is foreseeable).

(d) The employer must provide the employee with advance written notice of the terms and conditions under which these payments must be made. (*See* § 825.301.)

(e) An employer may not require more of an employee using FMLA leave than the employer requires of other employees on ''leave without pay.''

(f) An employee who is receiving payments as a result of a workers' compensation injury must make arrangements with the employer for payment of group health plan benefits when simultaneously taking unpaid FMLA leave. *See* paragraph (c) of this section and § 825.207(d)(1).

§ 825.211 What special health benefits maintenance rules apply to multi-employer health plans?

(a) A multi-employer health plan is a plan to which more than one employer is required to contribute, and which is maintained pursuant to one or more collective bargaining agreements between employee organization(s) and the employers.

(b) An employer under a multi-employer plan must continue to make contributions on behalf of an employee using FMLA leave as though the employee had been continuously employed, unless the plan contains an explicit FMLA provision for maintaining coverage such as through pooled contributions by all employers party to the plan.

(c) During the duration of an employee's FMLA leave, coverage by the group health plan, and benefits provided pursuant to the plan, must be maintained at the level of coverage and benefits which were applicable to the employee at the time FMLA leave commenced.

(d) An employee using FMLA leave cannot be required to use ''banked'' hours or pay a greater premium than the employee would have been required to pay if the employee had been continuously employed.

(e) As provided in § 825.209(f) of this part, group health plan coverage must be maintained for an employee on FMLA leave until:

(1) the employee's FMLA leave entitlement is exhausted;

(2) the employer can show that the employee would have been laid off and the employment relationship terminated; or,

(3) the employee provides unequivocal notice of intent not to return to work.

§ 825.212 What are the consequences of an employee's failure to make timely health plan premium payments?

(a)(1) In the absence of an established employer policy providing a longer grace period, an employer's obligations to maintain health insurance coverage cease under FMLA if an employee's premium payment is more than 30 days late. In order to drop the coverage for an employee whose premium payment is late, the employer must provide written notice to the employee that the payment has not been received. Such notice must be mailed to the employee at least 15 days before coverage is to cease, advising that coverage will be dropped on a specified date at least 15 days after the date of the letter unless the payment has been received by that date. If the employer has established policies regarding other forms of unpaid leave that provide for the employer to cease coverage retroactively to the date the unpaid premium payment was due, the employer may drop the employee from coverage retroactively in accordance with that policy, provided the 15-day notice was given. In the absence of such a policy, coverage for the employee may be terminated at the end of the 30-day grace period, where the required 15-day notice has been provided.

(2) An employer has no obligation regarding the maintenance of a health insurance policy which is not a ''group health plan.'' See § 825.209(a).

(3) All other obligations of an employer under FMLA would continue; for example, the employer continues to have an obligation to reinstate an employee upon return from leave.

(b) The employer may recover the employee's share of any premium payments missed by the employee for any FMLA leave period during which the employer maintains health coverage by paying the employee's share after the premium payment is missed.

(c) If coverage lapses because an employee has not made required premium payments, upon the employee's return from FMLA leave the employer must still restore the employee to coverage/benefits equivalent to those the employee would have had if leave had not been taken and the premium payment(s) had not been missed, including family or dependent coverage. See § 825.215(d)(1)–(5). In such case, an employee may not be required to meet any qualification requirements imposed by the plan, including any new preexisting condition waiting period, to wait for an open season, or to pass a medical examination to obtain reinstatement of coverage.

§ 825.213 May an employer recover costs it incurred for maintaining ''group health plan'' or other non-health benefits coverage during FMLA leave?

(a) In addition to the circumstances discussed in § 825.212(b), an employer may recover its share of health plan premiums during a period of unpaid FMLA leave from an employee if the employee fails to return to work after the employee's FMLA leave entitlement has been exhausted or expires, unless the reason the employee does not return is due to:

(1) The continuation, recurrence, or onset of a serious health condition of the employee or the employee's family member which would otherwise entitle the employee to leave under FMLA; or

(2) Other circumstances beyond the employee's control. Examples of ''other circumstances beyond the employee's control'' are necessarily broad. They include such situations as where a parent chooses to stay home with a newborn child who has a serious health condition; an employee's spouse is unexpectedly transferred to a job location more than 75 miles from the employee's worksite; a relative or individual other than an immediate family member has a serious health condition and the employee is needed to provide care; the employee is laid off while on leave; or, the employee is a ''key employee'' who decides not to return to work upon being notified of the employer's intention to deny restoration because of substantial and grievous economic injury to the employer's operations and is not reinstated by the employer. Other circumstances beyond the employee's control would not include a situation where an employee desires to remain with a parent in a distant city even though the parent no longer requires the employee's care, or a parent chooses not to return to work to stay home with a well, newborn child.

(3) When an employee fails to return to work because of the continuation, recurrence, or onset of a serious health condition, thereby precluding the employer from recovering its (share of) health benefit premium payments made on the employee's behalf during a period of unpaid FMLA leave, the employer may require medical certification of the employee's or the family member's serious health condition. Such certification is not required unless requested by the employer. The employee is required to provide medical certification in a timely manner which, for purposes of this section, is within 30 days from the date of the employer's request. For purposes of medical certification, the employee

may use the optional DOL form developed for this purpose (see § 825.306(a) and Appendix B of this part). If the employer requests medical certification and the employee does not provide such certification in a timely manner (within 30 days), or the reason for not returning to work does not meet the test of other circumstances beyond the employee's control, the employer may recover 100% of the health benefit premiums it paid during the period of unpaid FMLA leave.

(b) Under some circumstances an employer may elect to maintain other benefits, *e.g.*, life insurance, disability insurance, *etc.*, by paying the employee's (share of) premiums during periods of unpaid FMLA leave. For example, to ensure the employer can meet its responsibilities to provide equivalent benefits to the employee upon return from unpaid FMLA leave, it may be necessary that premiums be paid continuously to avoid a lapse of coverage. If the employer elects to maintain such benefits during the leave, at the conclusion of leave, the employer is entitled to recover only the costs incurred for paying the employee's share of any premiums whether or not the employee returns to work.

(c) An employee who returns to work for at least 30 calendar days is considered to have ''returned'' to work. An employee who transfers directly from taking FMLA leave to retirement, or who retires during the first 30 days after the employee returns to work, is deemed to have returned to work.

(d) When an employee elects or an employer requires paid leave to be substituted for FMLA leave, the employer may not recover its (share of) health insurance or other non-health benefit premiums for any period of FMLA leave covered by paid leave. Because paid leave provided under a plan covering temporary disabilities (including workers' compensation) is not unpaid, recovery of health insurance premiums does not apply to such paid leave.

(e) The amount that self-insured employers may recover is limited to only the employer's share of allowable ''premiums'' as would be calculated under COBRA, excluding the 2 percent fee for administrative costs.

(f) When an employee fails to return to work, any health and non-health benefit premiums which this section of the regulations permits an employer to recover are a debt owed by the non-returning employee to the employer. The existence of this debt caused by the employee's failure to return to work does not alter the employer's responsibilities for health benefit coverage and, under a self-insurance plan, payment of claims incurred during the period of FMLA leave. To the extent recovery is allowed, the employer may recover the costs through deduction from any sums due to the employee (*e.g.*, unpaid wages, vacation pay, profit sharing, *etc.*), provided such deductions do not otherwise violate applicable Federal or State wage payment or other laws. Alternatively, the employer may initiate legal action against the employee to recover such costs.

§ 825.214 What are an employee's rights on returning to work from FMLA leave?

(a) On return from FMLA leave, an employee is entitled to be returned to the same position the employee held when leave commenced, or to an equivalent position with equivalent benefits, pay, and other terms and conditions of employment. An employee is entitled to such reinstatement even if the employee has been replaced or his or her position has been restructured to accommodate the employee's absence. *See* also § 825.106(f) for the obligations of joint employers.

(b) If the employee is unable to perform an essential function of the position because of a physical or mental condition, including the continuation of a serious health condition, the employee has no right to restoration to another position under the FMLA. However, the employer's obligations may be governed by the Americans with Disabilities Act (ADA). *See* § 825.702.

§ 825.215 What is an equivalent position?

(a) An equivalent position is one that is virtually identical to the employee's former position in terms of pay, benefits and working conditions, including privileges, perquisites and status. It must involve the same or substantially similar duties and responsibilities, which must entail substantially equivalent skill, effort, responsibility, and authority.

(b) If an employee is no longer qualified for the position because of the employee's inability to attend a necessary course, renew a license, fly a minimum number of hours, *etc.*, as a result of the leave, the employee shall be given a reasonable opportunity to fulfill those conditions upon return to work.

(c) *Equivalent Pay.* (1) An employee is entitled to any unconditional pay increases which may have occurred during the FMLA leave period, such as cost of living increases. Pay increases conditioned upon seniority, length of service, or work performed would not have to be granted unless it is the employer's policy or practice to do so with respect to other employees on ''leave without pay.'' In such case, any pay increase would be granted based on the employee's seniority, length of service, work performed, etc., excluding the period of unpaid FMLA leave. An employee is entitled to be restored to a position with the same or equivalent pay premiums, such as a shift differential. If an employee departed from a position averaging ten hours of overtime (and corresponding overtime pay) each week, an employee is ordinarily entitled to such a position on return from FMLA leave.

(2) Many employers pay bonuses in different forms to employees for job-related performance such as for perfect attendance, safety (absence of injuries or accidents on the job) and exceeding production goals. Bonuses for perfect attendance and safety do not require performance by the employee but rather contemplate the absence of occurrences. To the extent an employee who takes FMLA leave had met all the requirements for either or both of these bonuses before FMLA leave began, the employee is entitled to continue this entitlement upon return from FMLA leave, that is, the employee may not be disqualified for the bonus(es) for the taking of FMLA leave. *See* § 825.220 (b) and (c). A monthly production bonus, on the other hand does require performance by the employee. If the employee is on FMLA leave during any part of the period for which the bonus is computed, the employee is entitled to the same consideration for the bonus as other employees on paid or unpaid leave (as appropriate). *See* paragraph (d)(2) of this section.

(d) *Equivalent Benefits.* ''Benefits'' include all benefits provided or made available to employees by an employer, including group life insurance, health insurance, disability insurance, sick leave, annual leave, educational benefits, and pensions, regardless of whether such benefits are provided by a practice or written policy of an employer through an employee benefit plan as defined in Section 3(3) of the Employee Retirement Income Security Act of 1974, 29 U.S.C. 1002(3).

(1) At the end of an employee's FMLA leave, benefits must be resumed in the same manner and at the same levels as provided when the leave began, and subject to any changes in benefit levels that may have taken place during the period of FMLA leave affecting the entire workforce, unless otherwise elected by the employee. Upon return from FMLA leave, an employee cannot be required to requalify for any benefits the employee enjoyed before FMLA

leave began (including family or dependent coverages). For example, if an employee was covered by a life insurance policy before taking leave but is not covered or coverage lapses during the period of unpaid FMLA leave, the employee cannot be required to meet any qualifications, such as taking a physical examination, in order to requalify for life insurance upon return from leave. Accordingly, some employers may find it necessary to modify life insurance and other benefits programs in order to restore employees to equivalent benefits upon return from FMLA leave, make arrangements for continued payment of costs to maintain such benefits during unpaid FMLA leave, or pay these costs subject to recovery from the employee on return from leave. *See* § 825.213(b).

(2) An employee may, but is not entitled to, accrue any additional benefits or seniority during unpaid FMLA leave. Benefits accrued at the time leave began, however, (*e.g.*, paid vacation, sick or personal leave to the extent not substituted for FMLA leave) must be available to an employee upon return from leave.

(3) If, while on unpaid FMLA leave, an employee desires to continue life insurance, disability insurance, or other types of benefits for which he or she typically pays, the employer is required to follow established policies or practices for continuing such benefits for other instances of leave without pay. If the employer has no established policy, the employee and the employer are encouraged to agree upon arrangements before FMLA leave begins.

(4) With respect to pension and other retirement plans, any period of unpaid FMLA leave shall not be treated as or counted toward a break in service for purposes of vesting and eligibility to participate. Also, if the plan requires an employee to be employed on a specific date in order to be credited with a year of service for vesting, contributions or participation purposes, an employee on unpaid FMLA leave on that date shall be deemed to have been employed on that date. However, unpaid FMLA leave periods need not be treated as credited service for purposes of benefit accrual, vesting and eligibility to participate.

(5) Employees on unpaid FMLA leave are to be treated as if they continued to work for purposes of changes to benefit plans. They are entitled to changes in benefits plans, except those which may be dependent upon seniority or accrual during the leave period, immediately upon return from leave or to the same extent they would have qualified if no leave had been taken. For example if the benefit plan is predicated on a pre-established number of hours worked each year and the employee does not have sufficient hours as a result of taking unpaid FMLA leave, the benefit is lost. (In this regard, § 825.209 addresses health benefits.)

(e) *Equivalent Terms and Conditions of Employment.* An equivalent position must have substantially similar duties, conditions, responsibilities, privileges and status as the employee's original position.

(1) The employee must be reinstated to the same or a geographically proximate worksite (*i.e.*, one that does not involve a significant increase in commuting time or distance) from where the employee had previously been employed. If the employee's original worksite has been closed, the employee is entitled to the same rights as if the employee had not been on leave when the worksite closed. For example, if an employer transfers all employees from a closed worksite to a new worksite in a different city, the employee on leave is also entitled to transfer under the same conditions as if he or she had continued to be employed.

(2) The employee is ordinarily entitled to return to the same shift or the same or an equivalent work schedule.

(3) The employee must have the same or an equivalent opportunity for bonuses, profit-sharing, and other similar discretionary and non-discretionary payments.

(4) FMLA does not prohibit an employer from accommodating an employee's request to be restored to a different shift, schedule, or position which better suits the employee's personal needs on return from leave, or to offer a promotion to a better position. However, an employee cannot be induced by the employer to accept a different position against the employee's wishes.

(f) The requirement that an employee be restored to the same or equivalent job with the same or equivalent pay, benefits, and terms and conditions of employment does not extend to de minimis or intangible, unmeasurable aspects of the job. However, restoration to a job slated for lay-off when the employee's original position is not would not meet the requirements of an equivalent position.

§ 825.216 Are there any limitations on an employer's obligation to reinstate an employee?

(a) An employee has no greater right to reinstatement or to other benefits and conditions of employment than if the employee had been continuously employed during the FMLA leave period. An employer must be able to show that an employee would not otherwise have been employed at the time reinstatement is requested in order to deny restoration to employment. For example:

(1) If an employee is laid off during the course of taking FMLA leave and employment is terminated, the employer's responsibility to continue FMLA leave, maintain group health plan benefits and restore the employee cease at the time the employee is laid off, provided the employer has no continuing obligations under a collective bargaining agreement or otherwise. An employer would have the burden of proving that an employee would have been laid off during the FMLA leave period and, therefore, would not be entitled to restoration.

(2) If a shift has been eliminated, or overtime has been decreased, an employee would not be entitled to return to work that shift or the original overtime hours upon restoration. However, if a position on, for example, a night shift has been filled by another employee, the employee is entitled to return to the same shift on which employed before taking FMLA leave.

(b) If an employee was hired for a specific term or only to perform work on a discrete project, the employer has no obligation to restore the employee if the employment term or project is over and the employer would not otherwise have continued to employ the employee. On the other hand, if an employee was hired to perform work on a contract, and after that contract period the contract was awarded to another contractor, the successor contractor may be required to restore the employee if it is a successor employer. See § 825.107.

(c) In addition to the circumstances explained above, an employer may deny job restoration to salaried eligible employees (''key employees,'' as defined in paragraph (c) of § 825.217) if such denial is necessary to prevent substantial and grievous economic injury to the operations of the employer; or may delay restoration to an employee who fails to provide a fitness for duty certificate to return to work under the conditions described in § 825.310.

(d) If the employee has been on a workers' compensation absence during which FMLA leave has been taken concurrently, and after 12 weeks of FMLA leave the employee is unable to return to work, the employee no longer has the protections of FMLA and must look to the workers' compensation statute or ADA for any relief or protections.

§ 825.217 What is a ''key employee''?

(a) A ''key employee'' is a salaried FMLA-eligible employee who is among the highest paid 10 percent of all the employees employed by the employer within 75 miles of the employee's worksite.

(b) The term ''salaried'' means ''paid on a salary basis,'' as defined in 29 CFR 541.118. This is the Department of Labor regulation defining employees who may qualify as exempt from the minimum wage and overtime requirements of the FLSA as executive, administrative, and professional employees.

(c) A ''key employee'' must be ''among the highest paid 10 percent'' of all the employees—both salaried and non-salaried, eligible and ineligible—who are employed by the employer within 75 miles of the worksite.

(1) In determining which employees are among the highest paid 10 percent, year-to-date earnings are divided by weeks worked by the employee (including weeks in which paid leave was taken). Earnings include wages, premium pay, incentive pay, and non-discretionary and discretionary bonuses. Earnings do not include incentives whose value is determined at some future date, *e.g.*, stock options, or benefits or perquisites.

(2) The determination of whether a salaried employee is among the highest paid 10 percent shall be made at the time the employee gives notice of the need for leave. No more than 10 percent of the employer's employees within 75 miles of the worksite may be ''key employees.''

§ 825.218 What does ''substantial and grievous economic injury'' mean?

(a) In order to deny restoration to a key employee, an employer must determine that the restoration of the employee to employment will cause ''substantial and grievous economic injury'' to the operations of the employer, not whether the absence of the employee will cause such substantial and grievous injury.

(b) An employer may take into account its ability to replace on a temporary basis (or temporarily do without) the employee on FMLA leave. If permanent replacement is unavoidable, the cost of then reinstating the employee can be considered in evaluating whether substantial and grievous economic injury will occur from restoration; in other words, the effect on the operations of the company of reinstating the employee in an equivalent position.

(c) A precise test cannot be set for the level of hardship or injury to the employer which must be sustained. If the reinstatement of a ''key employee'' threatens the economic viability of the firm, that would constitute ''substantial and grievous economic injury.'' A lesser injury which causes substantial, long-term economic injury would also be sufficient. Minor inconveniences and costs that the employer would experience in the normal course of doing business would certainly not constitute ''substantial and grievous economic injury.''

(d) FMLA's ''substantial and grievous economic injury'' standard is different from and more stringent than the ''undue hardship'' test under the ADA (see, also § 825.702).

§ 825.219 What are the rights of a key employee?

(a) An employer who believes that reinstatement may be denied to a key employee, must give written notice to the employee at the time the employee gives notice of the need for FMLA leave (or when FMLA leave commences, if earlier) that he or she qualifies as a key employee. At the same time, the employer must also fully inform the employee of the potential consequences with respect to reinstatement and maintenance of health benefits if the employer should determine that substantial and grievous economic injury to the employer's operations will result if the employee is reinstated from FMLA leave. If such notice cannot be given immediately because of the need to determine whether the employee is a key employee, it shall be given as soon as practicable after being notified of a need for leave (or the commencement of leave, if earlier). It is expected that in most circumstances there will be no desire that an employee be denied restoration after FMLA leave and, therefore, there would be no need to provide such notice. However, an employer who fails to provide such timely notice will lose its right to deny restoration even if substantial and grievous economic injury will result from reinstatement.

(b) As soon as an employer makes a good faith determination, based on the facts available, that substantial and grievous economic injury to its operations will result if a key employee who has given notice of the need for FMLA leave or is using FMLA leave is reinstated, the employer shall notify the employee in writing of its determination, that it cannot deny FMLA leave, and that it intends to deny restoration to employment on completion of the FMLA leave. It is anticipated that an employer will ordinarily be able to give such notice prior to the employee starting leave. The employer must serve this notice either in person or by certified mail. This notice must explain the basis for the employer's finding that substantial and grievous economic injury will result, and, if leave has commenced, must provide the employee a reasonable time in which to return to work, taking into account the circumstances, such as the length of the leave and the urgency of the need for the employee to return.

(c) If an employee on leave does not return to work in response to the employer's notification of intent to deny restoration, the employee continues to be entitled to maintenance of health benefits and the employer may not recover its cost of health benefit premiums. A key employee's rights under FMLA continue unless and until the employee either gives notice that he or she no longer wishes to return to work, or the employer actually denies reinstatement at the conclusion of the leave period.

(d) After notice to an employee has been given that substantial and grievous economic injury will result if the employee is reinstated to employment, an employee is still entitled to request reinstatement at the end of the leave period even if the employee did not return to work in response to the employer's notice. The employer must then again determine whether there will be substantial and grievous economic injury from reinstatement, based on the facts at that time. If it is determined that substantial and grievous economic injury will result, the employer shall notify the employee in writing (in person or by certified mail) of the denial of restoration.

§ 825.220 How are employees protected who request leave or otherwise assert FMLA rights?

(a) The FMLA prohibits interference with an employee's rights under the law, and with legal proceedings or inquiries relating to an employee's rights. More specifically, the law contains the following employee protections:

(1) An employer is prohibited from interfering with, restraining, or denying the exercise of (or attempts to exercise) any rights provided by the Act.

(2) An employer is prohibited from discharging or in any other way discriminating against any person (whether or not an employee) for opposing or complaining about any unlawful practice under the Act.

(3) All persons (whether or not employers) are prohibited from discharging or in any other way discriminating against any person

(whether or not an employee) because that person has—

(i) Filed any charge, or has instituted (or caused to be instituted) any proceeding under or related to this Act;

(ii) Given, or is about to give, any information in connection with an inquiry or proceeding relating to a right under this Act;

(iii) Testified, or is about to testify, in any inquiry or proceeding relating to a right under this Act.

(b) Any violations of the Act or of these regulations constitute interfering with, restraining, or denying the exercise of rights provided by the Act. ''Interfering with'' the exercise of an employee's rights would include, for example, not only refusing to authorize FMLA leave, but discouraging an employee from using such leave. It would also include manipulation by a covered employer to avoid responsibilities under FMLA, for example:

(1) transferring employees from one worksite to another for the purpose of reducing worksites, or to keep worksites, below the 50-employee threshold for employee eligibility under the Act;

(2) changing the essential functions of the job in order to preclude the taking of leave;

(3) reducing hours available to work in order to avoid employee eligibility.

(c) An employer is prohibited from discriminating against employees or prospective employees who have used FMLA leave. For example, if an employee on leave without pay would otherwise be entitled to full benefits (other than health benefits), the same benefits would be required to be provided to an employee on unpaid FMLA leave. By the same token, employers cannot use the taking of FMLA leave as a negative factor in employment actions, such as hiring, promotions or disciplinary actions; nor can FMLA leave be counted under ''no fault'' attendance policies.

(d) Employees cannot waive, nor may employers induce employees to waive, their rights under FMLA. For example, employees (or their collective bargaining representatives) cannot ''trade off'' the right to take FMLA leave against some other benefit offered by the employer. This does not prevent an employee's voluntary and uncoerced acceptance (not as a condition of employment) of a ''light duty'' assignment while recovering from a serious health condition (*see* § 825.702(d)). In such a circumstance the employee's right to restoration to the same or an equivalent position is available until 12 weeks have passed within the 12-month period, including all FMLA leave taken and the period of ''light duty.''

(e) Individuals, and not merely employees, are protected from retaliation for opposing (*e.g.*, file a complaint about) any practice which is unlawful under the Act. They are similarly protected if they oppose any practice which they reasonably believe to be a violation of the Act or regulations.

Subpart C—How do Employees Learn of Their FMLA Rights and Obligations, and What Can an Employer Require of an Employee?

§ 825.300 What posting requirements does the Act place on employers?

(a) Every employer covered by the FMLA is required to post and keep posted on its premises, in conspicuous places where employees are employed, whether or not it has any ''eligible'' employees, a notice explaining the Act's provisions and providing information concerning the procedures for filing complaints of violations of the Act with the Wage and Hour Division. The notice must be posted prominently where it can be readily seen by employees and applicants for employment. Employers may duplicate the text of the notice contained in Appendix C of this part, or copies of the required notice may be obtained from local offices of the Wage and Hour Division. The poster and the text must be large enough to be easily read and contain fully legible text.

(b) An employer that willfully violates the posting requirement may be assessed a civil money penalty by the Wage and Hour Division not to exceed $100 for each separate offense. Furthermore, an employer that fails to post the required notice cannot take any adverse action against an employee, including denying FMLA leave, for failing to furnish the employer with advance notice of a need to take FMLA leave.

(c) Where an employer's workforce is comprised of a significant portion of workers who are not literate in English, the employer shall be responsible for providing the notice in a language in which the employees are literate.

§ 825.301 What other notices to employees are required of employers under the FMLA?

(a)(1) If an FMLA-covered employer has any eligible employees and has any written guidance to employees concerning employee benefits or leave rights, such as in an employee handbook, information concerning FMLA entitlements and employee obligations under the FMLA must be included in the handbook or other document. For example, if an employer provides an employee handbook to all employees that describes the employer's policies regarding leave, wages, attendance, and similar matters, the handbook must incorporate information on FMLA rights and responsibilities and the employer's policies regarding the FMLA. Informational publications describing the Act's provisions are available from local offices of the Wage and Hour Division and may be incorporated in such employer handbooks or written policies.

(2) If such an employer does not have written policies, manuals, or handbooks describing employee benefits and leave provisions, the employer shall provide written guidance to an employee concerning all the employee's rights and obligations under the FMLA. This notice shall be provided to employees each time notice is given pursuant to paragraph (b), and in accordance with the provisions of that paragraph. Employers may duplicate and provide the employee a copy of the FMLA Fact Sheet available from the nearest office of the Wage and Hour Division to provide such guidance.

(b)(1) The employer shall also provide the employee with written notice detailing the specific expectations and obligations of the employee and explaining any consequences of a failure to meet these obligations. The written notice must be provided to the employee in a language in which the employee is literate (see § 825.300(c)). Such specific notice must include, as appropriate:

(i) that the leave will be counted against the employee's annual FMLA leave entitlement (see § 825.208);

(ii) any requirements for the employee to furnish medical certification of a serious health condition and the consequences of failing to do so (see § 825.305);

(iii) the employee's right to substitute paid leave and whether the employer will require the substitution of paid leave, and the conditions related to any substitution;

(iv) any requirement for the employee to make any premium payments to maintain health benefits and the arrangements for making such payments (see § 825.210), and the possible consequences of failure to make such payments on a timely basis (i.e., the circumstances under which coverage may lapse);

(v) any requirement for the employee to present a fitness-for-duty certificate to be restored to employment (see § 825.309);

(vi) the employee's status as a ''key employee'' and the potential consequence that restoration may be denied following FMLA leave, explaining the conditions required for such denial (see § 825.218);

(vii) the employee's right to restoration to the same or an equivalent job upon return from leave (see §§ 825.214 and 825.604); and,

(viii) the employee's potential liability for payment of health insurance premiums paid by the employer during the employee's unpaid FMLA leave if the employee fails to return to work after taking FMLA leave (see § 825.213).

(2) The specific notice may include other information—*e.g.*, whether the employer will require periodic reports of the employee's status and intent to return to work, but is not required to do so. A prototype notice is contained in Appendix D of this part, or may be obtained from local offices of the Department of Labor's Wage and Hour Division, which employers may adapt for their use to meet these specific notice requirements.

(c) Except as provided in this subparagraph, the written notice required by paragraph (b) (and by subparagraph (a)(2) where applicable) must be provided to the employee no less often than the first time in each six-month period that an employee gives notice of the need for FMLA leave (if FMLA leave is taken during the six-month period). The notice shall be given within a reasonable time after notice of the need for leave is given by the employee—within one or two business days if feasible. If leave has already begun, the notice should be mailed to the employee's address of record.

(1) If the specific information provided by the notice changes with respect to a subsequent period of FMLA leave during the six-month period, the employer shall, within one or two business days of receipt of the employee's notice of need for leave, provide written notice referencing the prior notice and setting forth any of the information in subparagraph (b) which has changed. For example, if the initial leave period were paid leave and the subsequent leave period would be unpaid leave, the employer may need to give notice of the arrangements for making premium payments.

(2)(i) Except as provided in subparagraph (ii), if the employer is requiring medical certification or a ''fitness-for-duty'' report, written notice of the requirement shall be given with respect to each employee notice of a need for leave.

(ii) Subsequent written notification shall *not* be required if the initial notice in the six-months period *and* the employer handbook or other written documents (if any) describing the employer's leave policies, clearly provided that certification or a ''fitness-for-duty'' report would be required (*e.g.*, by stating that certification would be required in all cases, by stating that certification would be required in all cases in which leave of more than a specified number of days is taken, or by stating that a ''fitness-for-duty'' report would be required in all cases for back injuries for employees in a certain occupation). Where subsequent written notice is not required, at least oral notice shall be provided. (See § 825.305(a).)

(d) Employers are also expected to responsively answer questions from employees concerning their rights and responsibilities under the FMLA.

(e) Employers furnishing FMLA-required notices to sensory impaired individuals must also comply with all applicable requirements under Federal or State law.

(f) If an employer fails to provide notice in accordance with the provisions of this section, the employer may not take action against an employee for failure to comply with any provision required to be set forth in the notice.

§ 825.302 What notice does an employee have to give an employer when the need for FMLA leave is foreseeable?

(a) An employee must provide the employer at least 30 days advance notice before FMLA leave is to begin if the need for the leave is foreseeable based on an expected birth, placement for adoption or foster care, or planned medical treatment for a serious health condition of the employee or of a family member. If 30 days notice is not practicable, such as because of a lack of knowledge of approximately when leave will be required to begin, a change in circumstances, or a medical emergency, notice must be given as soon as practicable. For example, an employee's health condition may require leave to commence earlier than anticipated before the birth of a child. Similarly, little opportunity for notice may be given before placement for adoption. Whether the leave is to be continuous or is to be taken intermittently or on a reduced schedule basis, notice need only be given one time, but the employee shall advise the employer as soon as practicable if dates of scheduled leave change or are extended, or were initially unknown.

(b) ''As soon as practicable'' means as soon as both possible and practical, taking into account all of the facts and circumstances in the individual case. For foreseeable leave where it is not possible to give as much as 30 days notice, ''as soon as practicable'' ordinarily would mean at least verbal notification to the employer within one or two business days of when the need for leave becomes known to the employee.

(c) An employee shall provide at least verbal notice sufficient to make the employer aware that the employee needs FMLA-qualifying leave, and the anticipated timing and duration of the leave. The employee need not expressly assert rights under the FMLA or even mention the FMLA, but may only state that leave is needed for an expected birth or adoption, for example. The employer should inquire further of the employee if it is necessary to have more information about whether FMLA leave is being sought by the employee, and obtain the necessary details of the leave to be taken. In the case of medical conditions, the employer may find it necessary to inquire further to determine if the leave is because of a serious health condition and may request medical certification to support the need for such leave (see § 825.305).

(d) An employer may also require an employee to comply with the employer's usual and customary notice and procedural requirements for requesting leave. For example, an employer may require that written notice set forth the reasons for the requested leave, the anticipated duration of the leave, and the anticipated start of the leave. However, failure to follow such internal employer procedures will not permit an employer to disallow or delay an employee's taking FMLA leave if the employee gives timely verbal or other notice.

(e) When planning medical treatment, the employee must consult with the employer and make a reasonable effort to schedule the leave so as not to disrupt unduly the employer's operations, subject to the approval of the health care provider. Employees are ordinarily expected to consult with their employers prior to the scheduling of treatment in order to work out a treatment schedule which best suits the needs of both the employer and the employee. If an employee who provides notice of the need to take FMLA leave on an intermittent basis for planned medical treatment neglects to consult with the employer to make a reasonable attempt to arrange the schedule of treatments so as not to unduly disrupt the employer's operations, the employer may initiate discussions with the employee and require the employee to attempt to make such arrangements,

subject to the approval of the health care provider.

(f) In the case of intermittent leave or leave on a reduced leave schedule which is medically necessary, an employee shall advise the employer, upon request, of the reasons why the intermittent/reduced leave schedule is necessary and of the schedule for treatment, if applicable. The employee and employer shall attempt to work out a schedule which meets the employee's needs without unduly disrupting the employer's operations, subject to the approval of the health care provider.

(g) An employer may waive employees' FMLA notice requirements. In addition, an employer may not require compliance with stricter FMLA notice requirements where the provisions of a collective bargaining agreement, State law, or applicable leave plan allow less advance notice to the employer. For example, if an employee (or employer) elects to substitute paid vacation leave for unpaid FMLA leave (*see* § 825.207), and the employer's paid vacation leave plan imposes no prior notification requirements for taking such vacation leave, no advance notice may be required for the FMLA leave taken in these circumstances. On the other hand, FMLA notice requirements would apply to a period of unpaid FMLA leave, unless the employer imposes lesser notice requirements on employees taking leave without pay.

§ 825.303 What are the requirements for an employee to furnish notice to an employer where the need for FMLA leave is not foreseeable?

(a) When the approximate timing of the need for leave is not foreseeable, an employee should give notice to the employer of the need for FMLA leave as soon as practicable under the facts and circumstances of the particular case. It is expected that an employee will give notice to the employer within no more than one or two working days of learning of the need for leave, except in extraordinary circumstances where such notice is not feasible. In the case of a medical emergency requiring leave because of an employee's own serious health condition or to care for a family member with a serious health condition, written advance notice pursuant to an employer's internal rules and procedures may not be required when FMLA leave is involved.

(b) The employee should provide notice to the employer either in person or by telephone, telegraph, facsimile (''fax'') machine or other electronic means. Notice may be given by the employee's spokesperson (*e.g.*, spouse, adult family member or other responsible party) if the employee is unable to do so personally. The employee need not expressly assert rights under the FMLA or even mention the FMLA, but may only state that leave is needed. The employer will be expected to obtain any additional required information through informal means. The employee or spokesperson will be expected to provide more information when it can readily be accomplished as a practical matter, taking into consideration the exigencies of the situation.

§ 825.304 What recourse do employers have if employees fail to provide the required notice?

(a) An employer may waive employees' FMLA notice obligations or the employer's own internal rules on leave notice requirements.

(b) If an employee fails to give 30 days notice for foreseeable leave with no reasonable excuse for the delay, the employer may delay the taking of FMLA leave until at least 30 days after the date the employee provides notice to the employer of the need for FMLA leave.

(c) In all cases, in order for the onset of an employee's FMLA leave to be delayed due to lack of required notice, it must be clear that the employee had actual notice of the FMLA notice requirements. This condition would be satisfied by the employer's proper posting of the required notice at the worksite where the employee is employed. Furthermore, the need for leave and the approximate date leave would be taken must have been clearly foreseeable to the employee 30 days in advance of the leave. For example, knowledge that an employee would receive a telephone call about the availability of a child for adoption at some unknown point in the future would not be sufficient.

§ 825.305 When must an employee provide medical certification to support FMLA leave?

(a) An employer may require that an employee's leave to care for the employee's seriously-ill spouse, son, daughter, or parent, or due to the employee's own serious health condition that makes the employee unable to perform one or more of the essential functions of the employee's position, be supported by a certification issued by the health care provider of the employee or the employee's ill family member. An employer must give notice of a requirement for medical certification each time a certification is required; such notice must be written notice whenever required by § 825.301. An employer's oral request to an employee to furnish any subsequent medical certification is sufficient.

(b) When the leave is foreseeable and at least 30 days notice has been provided, the employee should provide the medical certification before the leave begins. When this is not possible, the employee must provide the requested certification to the employer within the time frame requested by the employer (which must allow at least 15 calendar days after the employer's request), unless it is not practicable under the particular circumstances to do so despite the employee's diligent, good faith efforts.

(c) In most cases, the employer should request that an employee furnish certification from a health care provider at the time the employee gives notice of the need for leave or within two business days thereafter, or, in the case of unforeseen leave, within two business days after the leave commences. The employer may request certification at some later date if the employer later has reason to question the appropriateness of the leave or its duration.

(d) At the time the employer requests certification, the employer must also advise an employee of the anticipated consequences of an employee's failure to provide adequate certification. The employer shall advise an employee whenever the employer finds a certification incomplete, and provide the employee a reasonable opportunity to cure any such deficiency.

(e) If the employer's sick or medical leave plan imposes medical certification requirements that are less stringent than the certification requirements of these regulations, and the employee or employer elects to substitute paid sick, vacation, personal or family leave for unpaid FMLA leave where authorized (*see* § 825.207), only the employer's less stringent sick leave certification requirements may be imposed.

§ 825.306 How much information may be required in medical certifications of a serious health condition?

(a) DOL has developed an optional form (Form WH–380, as revised) for employees' (or their family members') use in obtaining medical certification, including second and third opinions, from health care providers that meets FMLA's certification requirements. (See Appendix B to these regulations.) This optional form reflects certification requirements so as to permit the health care provider to furnish appropriate medical information within his or her knowledge.

(b) Form WH–380, as revised, or another form containing the same basic information, may be used by the employer; however, no additional information may be required. In all instances the information on the form must relate only to the serious health condition for which the current need for leave exists. The form identifies the health care provider and type of medical practice (including pertinent specialization, if any), makes maximum use of checklist entries for ease in completing the form, and contains required entries for:

(1) A certification as to which part of the definition of ''serious health condition'' (see § 825.114), if any, applies to the patient's condition, and the medical facts which support the certification, including a brief statement as to how the medical facts meet the criteria of the definition.

(2)(i) The approximate date the serious health condition commenced, and its probable duration, including the probable duration of the patient's present incapacity (defined to mean inability to work, attend school or perform other regular daily activities due to the serious health condition, treatment therefor, or recovery therefrom) if different.

(ii) Whether it will be necessary for the employee to take leave intermittently or to work on a reduced leave schedule basis (*i.e.,* part-time) as a result of the serious health condition (see § 825.117 and § 825.203), and if so, the probable duration of such schedule.

(iii) If the condition is pregnancy or a chronic condition within the meaning of § 825.114(a)(2)(iii), whether the patient is presently incapacitated and the likely duration and frequency of episodes of incapacity.

(3)(i)(A) If additional treatments will be required for the condition, an estimate of the probable number of such treatments.

(B) If the patient's incapacity will be intermittent, or will require a reduced leave schedule, an estimate of the probable number and interval between such treatments, actual or estimated dates of treatment if known, and period required for recovery if any.

(ii) If any of the treatments referred to in subparagraph (i) will be provided by another provider of health services (e.g., physical therapist), the nature of the treatments.

(iii) If a regimen of continuing treatment by the patient is required under the supervision of the health care provider, a general description of the regimen (see § 825.114(b)).

(4) If medical leave is required for the employee's absence from work because of the employee's own condition (including absences due to pregnancy or a chronic condition), whether the employee:

(i) Is unable to perform work of any kind;

(ii) Is unable to perform any one or more of the essential functions of the employee's position, including a statement of the essential functions the employee is unable to perform (see § 825.115), based on either information provided on a statement from the employer of the essential functions of the position or, if not provided, discussion with the employee about the employee's job functions; or

(iii) Must be absent from work for treatment.

(5)(i) If leave is required to care for a family member of the employee with a serious health condition, whether the patient requires assistance for basic medical or personal needs or safety, or for transportation; or if not, whether the employee's presence to provide psychological comfort would be beneficial to the patient or assist in the patient's recovery. The employee is required to indicate on the form the care he or she will provide and an estimate of the time period.

(ii) If the employee's family member will need care only intermittently or on a reduced leave schedule basis (*i.e.,* part-time), the probable duration of the need.

(c) If the employer's sick or medical leave plan requires less information to be furnished in medical certifications than the certification requirements of these regulations, and the employee or employer elects to substitute paid sick, vacation, personal or family leave for unpaid FMLA leave where authorized (*see* § 825.207), only the employer's lesser sick leave certification requirements may be imposed.

§ 825.307 What may an employer do if it questions the adequacy of a medical certification?

(a) If an employee submits a complete certification signed by the health care provider, the employer may not request additional information from the employee's health care provider. However, a health care provider representing the employer may contact the employee's health care provider, with the employee's permission, for purposes of *clarification* and authenticity of the medical certification.

(1) If an employee is on FMLA leave running concurrently with a workers' compensation absence, and the provisions of the workers' compensation statute permit the employer or the employer's representative to have direct contact with the employee's workers' compensation health care provider, the employer may follow the workers' compensation provisions.

(2) An employer who has reason to doubt the validity of a medical certification may require the employee to obtain a second opinion at the employer's expense. Pending receipt of the second (or third) medical opinion, the employee is provisionally entitled to the benefits of the Act, including maintenance of group health benefits. If the certifications do not ultimately establish the employee's entitlement to FMLA leave, the leave shall not be designated as FMLA leave and may be treated as paid or unpaid leave under the employer's established leave policies. The employer is permitted to designate the health care provider to furnish the second opinion, but the selected health care provider may not be employed on a regular basis by the employer. See also § 825.305(a)(3).

(b) The employer may not regularly contract with or otherwise regularly utilize the services of the health care provider furnishing the second opinion unless the employer is located in an area where access to health care is extremely limited (*e.g.,* a rural area where no more than one or two doctors practice in the relevant specialty in the vicinity).

(c) If the opinions of the employee's and the employer's designated health care providers differ, the employer may require the employee to obtain certification from a third health care provider, again at the employer's expense. This third opinion shall be final and binding. The third health care provider must be designated or approved jointly by the employer and the employee. The employer and the employee must each act in good faith to attempt to reach agreement on whom to select for the third opinion provider. If the employer does not attempt in good faith to reach agreement, the employer will be bound by the first certification. If the employee does not attempt in good faith to reach agreement, the employee will be bound by the second certification. For example, an employee who refuses to agree to see a doctor in the specialty in question may be failing to act in good faith. On the other hand, an employer that refuses to agree to any doctor on a list of specialists in the appropriate field provided by the employee and whom the employee has not previously consulted may be failing to act in good faith.

(d) The employer is required to provide the employee with a copy of the second and third medical opinions, where applicable, upon request by the

employee. Requested copies are to be provided within two business days unless extenuating circumstances prevent such action.

(e) If the employer requires the employee to obtain either a second or third opinion the employer must reimburse an employee or family member for any reasonable ''out of pocket'' travel expenses incurred to obtain the second and third medical opinions. The employer may not require the employee or family member to travel outside normal commuting distance for purposes of obtaining the second or third medical opinions except in very unusual circumstances.

(f) In circumstances when the employee or a family member is visiting in another country, or a family member resides in another country, and a serious health condition develops, the employer shall accept a medical certification as well as second and third opinions from a health care provider who practices in that country.

§ 825.308 Under what circumstances may an employer request subsequent recertifications of medical conditions?

(a) For pregnancy, chronic, or permanent/long-term conditions under continuing supervision of a health care provider (as defined in § 825.114(a)(2)(ii), (iii) or (iv)), an employer may request recertification no more often than every 30 days and only in connection with an absence by the employee, unless:

(1) Circumstances described by the previous certification have changed significantly (*e.g.*, the duration or frequency of absences, the severity of the condition, complications); or

(2) The employer receives information that casts doubt upon the employee's stated reason for the absence.

(b)(1) If the minimum duration of the period of incapacity specified on a certification furnished by the health care provider is more than 30 days, the employer may not request recertification until that minimum duration has passed unless one of the conditions set forth in paragraph (c)(1), (2) or (3) of this section is met.

(2) For FMLA leave taken intermittently or on a reduced leave schedule basis, the employer may not request recertification in less than the minimum period specified on the certification as necessary for such leave (including treatment) unless one of the conditions set forth in paragraph (c)(1), (2) or (3) of this section is met.

(c) For circumstances not covered by paragraphs (a) or (b) of this section, an employer may request recertification at any reasonable interval, but not more often than every 30 days, unless:

(1) The employee requests an extension of leave;

(2) Circumstances described by the previous certification have changed significantly (*e.g.*, the duration of the illness, the nature of the illness, complications); or

(3) The employer receives information that casts doubt upon the continuing validity of the certification.

(d) The employee must provide the requested recertification to the employer within the time frame requested by the employer (which must allow at least 15 calendar days after the employer's request), unless it is not practicable under the particular circumstances to do so despite the employee's diligent, good faith efforts.

(e) Any recertification requested by the employer shall be at the employee's expense unless the employer provides otherwise. No second or third opinion on recertification may be required.

§ 825.309 What notice may an employer require regarding an employee's intent to return to work?

(a) An employer may require an employee on FMLA leave to report periodically on the employee's status and intent to return to work. The employer's policy regarding such reports may not be discriminatory and must take into account all of the relevant facts and circumstances related to the individual employee's leave situation.

(b) If an employee gives unequivocal notice of intent not to return to work, the employer's obligations under FMLA to maintain health benefits (subject to COBRA requirements) and to restore the employee cease. However, these obligations continue if an employee indicates he or she may be unable to return to work but expresses a continuing desire to do so.

(c) It may be necessary for an employee to take more leave than originally anticipated. Conversely, an employee may discover after beginning leave that the circumstances have changed and the amount of leave originally anticipated is no longer necessary. An employee may not be required to take more FMLA leave than necessary to resolve the circumstance that precipitated the need for leave. In both of these situations, the employer may require that the employee provide the employer reasonable notice (*i.e.*,within two business days) of the changed circumstances where foreseeable. The employer may also obtain information on such changed circumstances through requested status reports.

§ 825.310 Under what circumstances may an employer require that an employee submit a medical certification that the employee is able (or unable) to return to work (i.e., a ''fitness-for-duty'' report)?

(a) As a condition of restoring an employee whose FMLA leave was occasioned by the employee's own serious health condition that made the employee unable to perform the employee's job, an employer may have a uniformly-applied policy or practice that requires all similarly-situated employees (*i.e.*, same occupation, same serious health condition) who take leave for such conditions to obtain and present certification from the employee's health care provider that the employee is able to resume work.

(b) If State or local law or the terms of a collective bargaining agreement govern an employee's return to work, those provisions shall be applied. Similarly, requirements under the Americans with Disabilities Act (ADA) that any return-to-work physical be job-related and consistent with business necessity apply. For example, an attorney could not be required to submit to a medical examination or inquiry just because her leg had been amputated. The essential functions of an attorney's job do not require use of both legs; therefore such an inquiry would not be job related. An employer may require a warehouse laborer, whose back impairment affects the ability to lift, to be examined by an orthopedist, but may not require this employee to submit to an HIV test where the test is not related to either the essential functions of his/her job or to his/her impairment.

(c) An employer may seek fitness-for-duty certification only with regard to the particular health condition that caused the employee's need for FMLA leave. The certification itself need only be a simple statement of an employee's ability to return to work. A health care provider employed by the employer may contact the employee's health care provider with the employee's permission, for purposes of clarification of the employee's fitness to return to work. No additional information may be acquired, and clarification may be requested only for the serious health condition for which FMLA leave was taken. The employer may not delay the employee's return to work while contact with the health care provider is being made.

(d) The cost of the certification shall be borne by the employee and the employee is not entitled to be paid for

the time or travel costs spent in acquiring the certification.

(e) The notice that employers are required to give to each employee giving notice of the need for FMLA leave regarding their FMLA rights and obligations (see § 825.301) shall advise the employee if the employer will require fitness-for-duty certification to return to work. If the employer has a handbook explaining employment policies and benefits, the handbook should explain the employer's general policy regarding any requirement for fitness-for-duty certification to return to work. Specific notice shall also be given to any employee from whom fitness-for-duty certification will be required either at the time notice of the need for leave is given or immediately after leave commences and the employer is advised of the medical circumstances requiring the leave, unless the employee's condition changes from one that did not previously require certification pursuant to the employer's practice or policy. No second or third fitness-for-duty certification may be required.

(f) An employer may delay restoration to employment until an employee submits a required fitness-for-duty certification unless the employer has failed to provide the notices required in paragraph (c) of this section.

(g) An employer is not entitled to certification of fitness to return to duty when the employee takes intermittent leave as described in § 825.203.

(h) When an employee is unable to return to work after FMLA leave because of the continuation, recurrence, or onset of the employee's or family member's serious health condition, thereby preventing the employer from recovering its share of health benefit premium payments made on the employee's behalf during a period of unpaid FMLA leave, the employer may require medical certification of the employee's or the family member's serious health condition. (See § 825.213(a)(3).) The cost of the certification shall be borne by the employee and the employee is not entitled to be paid for the time or travel costs spent in acquiring the certification.

§ 825.311 What happens if an employee fails to satisfy the medical certification and/or recertification requirements?

(a) In the case of foreseeable leave, an employer may delay the taking of FMLA leave to an employee who fails to provide timely certification after being requested by the employer to furnish such certification (i.e., within 15 calendar days, if practicable), until the required certification is provided.

(b) When the need for leave is not foreseeable, or in the case of recertification, an employee must provide certification (or recertification) within the time frame requested by the employer (which must allow at least 15 days after the employer's request) *or* as soon as reasonably possible under the particular facts and circumstances. In the case of a medical emergency, it may not be practicable for an employee to provide the required certification within 15 calendar days. If an employee fails to provide a medical certification within a reasonable time under the pertinent circumstances, the employer may delay the employee's continuation of FMLA leave. If the employee never produces the certification, the leave is not FMLA leave.

(c) When requested by the employer pursuant to a uniformly applied policy for similarly-situated employees, the employee must provide medical certification at the time the employee seeks reinstatement at the end of FMLA leave taken for the employee's serious health condition, that the employee is fit for duty and able to return to work (see § 825.310(a)) if the employer has provided the required notice (see § 825.301(c); the employer may delay restoration until the certification is provided. In this situation, unless the employee provides either a fitness-for-duty certification or a new medical certification for a serious health condition at the time FMLA leave is concluded, the employee may be terminated. See also § 825.213(a)(3).

§ 825.312 Under what circumstances may a covered employer refuse to provide FMLA leave or reinstatement to eligible employees?

(a) If an employee fails to give timely advance notice when the need for FMLA leave is foreseeable, the employer may delay the taking of FMLA leave until 30 days after the date the employee provides notice to the employer of the need for FMLA leave. (See § 825.302.)

(b) If an employee fails to provide in a timely manner a requested medical certification to substantiate the need for FMLA leave due to a serious health condition, an employer may delay continuation of FMLA leave until an employee submits the certificate. (See §§ 825.305 and 825.310.) If the employee never produces the certification, the leave is not FMLA leave.

(c) If an employee fails to provide a requested fitness-for-duty certification to return to work, an employer may delay restoration until the employee submits the certificate. (See §§ 825.309 and 825.310.)

(d) An employee has no greater right to reinstatement or to other benefits and conditions of employment than if the employee had been continuously employed during the FMLA leave period. Thus, an employee's rights to continued leave, maintenance of health benefits, and restoration cease under FMLA if and when the employment relationship terminates (*e.g.*, layoff), unless that relationship continues, for example, by the employee remaining on *paid* FMLA leave. If the employee is recalled or otherwise re-employed, an eligible employee is immediately entitled to further FMLA leave for an FMLA-qualifying reason. An employer must be able to show, when an employee requests restoration, that the employee would not otherwise have been employed if leave had not been taken in order to deny restoration to employment. (See § 825.216.)

(e) An employer may require an employee on FMLA leave to report periodically on the employee's status and intention to return to work. (See § 825.309.) If an employee unequivocally advises the employer either before or during the taking of leave that the employee does not intend to return to work, and the employment relationship is terminated, the employee's entitlement to continued leave, maintenance of health benefits, and restoration ceases unless the employment relationship continues, for example, by the employee remaining on *paid* leave. An employee may not be required to take more leave than necessary to address the circumstances for which leave was taken. If the employee is able to return to work earlier than anticipated, the employee shall provide the employer two business days notice where feasible; the employer is required to restore the employee once such notice is given, or where such prior notice was not feasible.

(f) An employer may deny restoration to employment, but not the taking of FMLA leave and the maintenance of health benefits, to an eligible employee only under the terms of the ''key employee'' exemption. Denial of reinstatement must be necessary to prevent ''substantial and grievous economic injury'' to the employer's operations. The employer must notify the employee of the employee's status as a ''key employee'' and of the employer's intent to deny reinstatement on that basis when the employer makes these determinations. If leave has started, the employee must be given a reasonable

opportunity to return to work after being so notified. (See § 825.220.)

(g) An employee who fraudulently obtains FMLA leave from an employer is not protected by FMLA's job restoration or maintenance of health benefits provisions.

(h) If the employer has a uniformly-applied policy governing outside or supplemental employment, such a policy may continue to apply to an employee while on FMLA leave. An employer which does not have such a policy may not deny benefits to which an employee is entitled under FMLA on this basis unless the FMLA leave was fraudulently obtained as in paragraph (g) of this section.

Subpart D—What Enforcement Mechanisms Does FMLA Provide?

§ 825.400 What can employees do who believe that their rights under FMLA have been violated?

(a) The employee has the choice of:

(1) Filing, or having another person file on his or her behalf, a complaint with the Secretary of Labor, or

(2) Filing a private lawsuit pursuant to section 107 of FMLA.

(b) If the employee files a private lawsuit, it must be filed within two years after the last action which the employee contends was in violation of the Act, or three years if the violation was willful.

(c) If an employer has violated one or more provisions of FMLA, and if justified by the facts of a particular case, an employee may receive one or more of the following: wages, employment benefits, or other compensation denied or lost to such employee by reason of the violation; or, where no such tangible loss has occurred, such as when FMLA leave was unlawfully denied, any actual monetary loss sustained by the employee as a direct result of the violation, such as the cost of providing care, up to a sum equal to 12 weeks of wages for the employee. In addition, the employee may be entitled to interest on such sum, calculated at the prevailing rate. An amount equalling the preceding sums may also be awarded as liquidated damages unless such amount is reduced by the court because the violation was in good faith and the employer had reasonable grounds for believing the employer had not violated the Act. When appropriate, the employee may also obtain appropriate equitable relief, such as employment, reinstatement and promotion. When the employer is found in violation, the employee may recover a reasonable attorney's fee, reasonable expert witness fees, and other costs of the action from the employer in addition to any judgment awarded by the court.

§ 825.401 Where may an employee file a complaint of FMLA violations with the Federal government?

(a) A complaint may be filed in person, by mail or by telephone, with the Wage and Hour Division, Employment Standards Administration, U.S. Department of Labor. A complaint may be filed at any local office of the Wage and Hour Division; the address and telephone number of local offices may be found in telephone directories.

(b) A complaint filed with the Secretary of Labor should be filed within a reasonable time of when the employee discovers that his or her FMLA rights have been violated. In no event may a complaint be filed more than two years after the action which is alleged to be a violation of FMLA occurred, or three years in the case of a willful violation.

(c) No particular form of complaint is required, except that a complaint must be reduced to writing and should include a full statement of the acts and/or omissions, with pertinent dates, which are believed to constitute the violation.

§ 825.402 How is an employer notified of a violation of the posting requirement?

Section 825.300 describes the requirements for covered employers to post a notice for employees that explains the Act's provisions. If a representative of the Department of Labor determines that an employer has committed a willful violation of this posting requirement, and that the imposition of a civil money penalty for such violation is appropriate, the representative may issue and serve a notice of penalty on such employer in person or by certified mail. Where service by certified mail is not accepted, notice shall be deemed received on the date of attempted delivery. Where service is not accepted, the notice may be served by regular mail.

§ 825.403 How may an employer appeal the assessment of a penalty for willful violation of the posting requirement?

(a) An employer may obtain a review of the assessment of penalty from the Wage and Hour Regional Administrator for the region in which the alleged violation(s) occurred. If the employer does not seek such a review or fails to do so in a timely manner, the notice of the penalty constitutes the final ruling of the Secretary of Labor.

(b) To obtain review, an employer may file a petition with the Wage and Hour Regional Administrator for the region in which the alleged violations occurred. No particular form of petition for review is required, except that the petition must be in writing, should contain the legal and factual bases for the petition, and must be mailed to the Regional Administrator within 15 days of receipt of the notice of penalty. The employer may request an oral hearing which may be conducted by telephone.

(c) The decision of the Regional Administrator constitutes the final order of the Secretary.

§ 825.404 What are the consequences of an employer not paying the penalty assessment after a final order is issued?

The Regional Administrator may seek to recover the unpaid penalty pursuant to the Debt Collection Act (DCA), 31 U.S.C. 3711 *et seq.*, and, in addition to seeking recovery of the unpaid final order, may seek interest and penalties as provided under the DCA. The final order may also be referred to the Solicitor of Labor for collection. The Secretary may file suit in any court of competent jurisdiction to recover the monies due as a result of the unpaid final order, interest, and penalties.

Subpart E—What Records Must Be Kept to Comply With the FMLA?

§ 825.500 What records must an employer keep to comply with the FMLA?

(a) FMLA provides that covered employers shall make, keep, and preserve records pertaining to their obligations under the Act in accordance with the recordkeeping requirements of section 11(c) of the Fair Labor Standards Act (FLSA) and in accordance with these regulations. FMLA also restricts the authority of the Department of Labor to require any employer or plan, fund or program to submit books or records more than once during any 12-month period unless the Department has reasonable cause to believe a violation of the FMLA exists or the DOL is investigating a complaint. These regulations establish no requirement for the submission of any records unless specifically requested by a Departmental official.

(b) *Form of records.* No particular order or form of records is required. These regulations establish no requirement that any employer revise its computerized payroll or personnel records systems to comply. However, employers must keep the records specified by these regulations for no less than three years and make them available for inspection, copying, and transcription by representatives of the Department of Labor upon request. The records may be maintained and preserved on microfilm or other basic source document of an automated data

processing memory provided that adequate projection or viewing equipment is available, that the reproductions are clear and identifiable by date or pay period, and that extensions or transcriptions of the information required herein can be and are made available upon request. Records kept in computer form must be made available for transcription or copying.

(c) *Items required*. Covered employers who have eligible employees must maintain records that must disclose the following:

(1) Basic payroll and identifying employee data, including name, address, and occupation; rate or basis of pay and terms of compensation; daily and weekly hours worked per pay period; additions to or deductions from wages; and total compensation paid.

(2) Dates FMLA leave is taken by FMLA eligible employees (*e.g.*, available from time records, requests for leave, etc., if so designated). Leave must be designated in records as FMLA leave; leave so designated may not include leave required under State law or an employer plan which is not also covered by FMLA.

(3) If FMLA leave is taken by eligible employees in increments of less than one full day, the hours of the leave.

(4) Copies of employee notices of leave furnished to the employer under FMLA, if in writing, and copies of all general and specific written notices given to employees as required under FMLA and these regulations (see § 825.301(c)). Copies may be maintained in employee personnel files.

(5) Any documents (including written and electronic records) describing employee benefits or employer policies and practices regarding the taking of paid and unpaid leaves.

(6) Premium payments of employee benefits.

(7) Records of any dispute between the employer and an eligible employee regarding designation of leave as FMLA leave, including any written statement from the employer or employee of the reasons for the designation and for the disagreement.

(d) Covered employers with no eligible employees must maintain the records set forth in paragraph (c)(1) above.

(e) Covered employers in a joint employment situation (*see* § 825.106) must keep all the records required by paragraph (c) of this section with respect to any primary employees, and must keep the records required by paragraph (c)(1) with respect to any secondary employees.

(f) If FMLA-eligible employees are not subject to FLSA's recordkeeping regulations for purposes of minimum wage or overtime compliance (*i.e.*, not covered by or exempt from FLSA), an employer need not keep a record of actual hours worked (as otherwise required under FLSA, 29 CFR 516.2(a)(7)), provided that:

(1) eligibility for FMLA leave is presumed for any employee who has been employed for at least 12 months; and

(2) with respect to employees who take FMLA leave intermittently or on a reduced leave schedule, the employer and employee agree on the employee's normal schedule or average hours worked each week and reduce their agreement to a written record maintained in accordance with paragraph (b) of this section.

(g) Records and documents relating to medical certifications, recertifications or medical histories of employees or employees' family members, created for purposes of FMLA, shall be maintained as confidential medical records in separate files/records from the usual personnel files, and if ADA is also applicable, such records shall be maintained in conformance with ADA confidentiality requirements (*see* 29 CFR § 1630.14(c)(1)), except that:

(1) Supervisors and managers may be informed regarding necessary restrictions on the work or duties of an employee and necessary accommodations;

(2) First aid and safety personnel may be informed (when appropriate) if the employee's physical or medical condition might require emergency treatment; and

(3) Government officials investigating compliance with FMLA (or other pertinent law) shall be provided relevant information upon request.

Subpart F—What Special Rules Apply to Employees of Schools?

§ 825.600 To whom do the special rules apply?

(a) Certain special rules apply to employees of ''local educational agencies,'' including public school boards and elementary and secondary schools under their jurisdiction, and private elementary and secondary schools. The special rules do not apply to other kinds of educational institutions, such as colleges and universities, trade schools, and preschools.

(b) Educational institutions are covered by FMLA (and these special rules) and the Act's 50-employee coverage test does not apply. The usual requirements for employees to be ''eligible'' do apply, however, including employment at a worksite where at least 50 employees are employed within 75 miles. For example, employees of a rural school would not be eligible for FMLA leave if the school has fewer than 50 employees and there are no other schools under the jurisdiction of the same employer (usually, a school board) within 75 miles.

(c) The special rules affect the taking of intermittent leave or leave on a reduced leave schedule, or leave near the end of an academic term (semester), by instructional employees. ''Instructional employees'' are those whose principal function is to teach and instruct students in a class, a small group, or an individual setting. This term includes not only teachers, but also athletic coaches, driving instructors, and special education assistants such as signers for the hearing impaired. It does not include, and the special rules do not apply to, teacher assistants or aides who do not have as their principal job actual teaching or instructing, nor does it include auxiliary personnel such as counselors, psychologists, or curriculum specialists. It also does not include cafeteria workers, maintenance workers, or bus drivers.

(d) Special rules which apply to restoration to an equivalent position apply to all employees of local educational agencies.

§ 825.601 What limitations apply to the taking of intermittent leave or leave on a reduced leave schedule?

(a) Leave taken for a period that ends with the school year and begins the next semester is leave taken consecutively rather than intermittently. The period during the summer vacation when the employee would not have been required to report for duty is not counted against the employee's FMLA leave entitlement. An instructional employee who is on FMLA leave at the end of the school year must be provided with any benefits over the summer vacation that employees would normally receive if they had been working at the end of the school year.

(1) If an eligible instructional employee needs intermittent leave or leave on a reduced leave schedule to care for a family member, or for the employee's own serious health condition, which is foreseeable based on planned medical treatment, and the employee would be on leave for more than 20 percent of the total number of working days over the period the leave would extend, the employer may require the employee to choose either to:

(i) Take leave for a period or periods of a particular duration, not greater than the duration of the planned treatment; or

(ii) Transfer temporarily to an available alternative position for which the employee is qualified, which has equivalent pay and benefits and which better accommodates recurring periods of leave than does the employee's regular position.

(2) These rules apply only to a leave involving more than 20 percent of the working days during the period over which the leave extends. For example, if an instructional employee who normally works five days each week needs to take two days of FMLA leave per week over a period of several weeks, the special rules would apply. Employees taking leave which constitutes 20 percent or less of the working days during the leave period would not be subject to transfer to an alternative position. ''Periods of a particular duration'' means a block, or blocks, of time beginning no earlier than the first day for which leave is needed and ending no later than the last day on which leave is needed, and may include one uninterrupted period of leave.

(b) If an instructional employee does not give required notice of foreseeable FMLA leave (see § 825.302) to be taken intermittently or on a reduced leave schedule, the employer may require the employee to take leave of a particular duration, or to transfer temporarily to an alternative position. Alternatively, the employer may require the employee to delay the taking of leave until the notice provision is met. *See* § 825.207(h).

§ 825.602 What limitations apply to the taking of leave near the end of an academic term?

(a) There are also different rules for instructional employees who begin leave more than five weeks before the end of a term, less than five weeks before the end of a term, and less than three weeks before the end of a term. Regular rules apply except in circumstances when:

(1) An instructional employee begins leave more than five weeks before the end of a term. The employer may require the employee to continue taking leave until the end of the term if—

(i) The leave will last at least three weeks, and

(ii) The employee would return to work during the three-week period before the end of the term.

(2) The employee begins leave for a purpose other than the employee's own serious health condition *during* the five-week period before the end of a term. The employer may require the employee to continue taking leave until the end of the term if—

(i) The leave will last more than two weeks, and

(ii) The employee would return to work during the two-week period before the end of the term.

(3) The employee begins leave for a purpose other than the employee's own serious health condition during the three-week period before the end of a term, and the leave will last more than five working days. The employer may require the employee to continue taking leave until the end of the term.

(b) For purposes of these provisions, ''academic term'' means the school semester, which typically ends near the end of the calendar year and the end of spring each school year. In no case may a school have more than two academic terms or semesters each year for purposes of FMLA. An example of leave falling within these provisions would be where an employee plans two weeks of leave to care for a family member which will begin three weeks before the end of the term. In that situation, the employer could require the employee to stay out on leave until the end of the term.

§ 825.603 Is all leave taken during ''periods of a particular duration'' counted against the FMLA leave entitlement?

(a) If an employee chooses to take leave for ''periods of a particular duration'' in the case of intermittent or reduced schedule leave, the entire period of leave taken will count as FMLA leave.

(b) In the case of an employee who is required to take leave until the end of an academic term, only the period of leave until the employee is ready and able to return to work shall be charged against the employee's FMLA leave entitlement. The employer has the option not to require the employee to stay on leave until the end of the school term. Therefore, any additional leave required by the employer to the end of the school term is not counted as FMLA leave; however, the employer shall be required to maintain the employee's group health insurance and restore the employee to the same or equivalent job including other benefits at the conclusion of the leave.

§ 825.604 What special rules apply to restoration to ''an equivalent position?''

The determination of how an employee is to be restored to ''an equivalent position'' upon return from FMLA leave will be made on the basis of ''established school board policies and practices, private school policies and practices, and collective bargaining agreements.'' The ''established policies'' and collective bargaining agreements used as a basis for restoration must be in writing, must be made known to the employee prior to the taking of FMLA leave, and must clearly explain the employee's restoration rights upon return from leave. Any established policy which is used as the basis for restoration of an employee to ''an equivalent position'' must provide substantially the same protections as provided in the Act for reinstated employees. See § 825.215. In other words, the policy or collective bargaining agreement must provide for restoration to an ''equivalent position'' with equivalent employment benefits, pay, and other terms and conditions of employment. For example, an employee may not be restored to a position requiring additional licensure or certification.

Subpart G—How Do Other Laws, Employer Practices, and Collective Bargaining Agreements Affect Employee Rights Under FMLA?

§ 825.700 What if an employer provides more generous benefits than required by FMLA?

(a) An employer must observe any employment benefit program or plan that provides greater family or medical leave rights to employees than the rights established by the FMLA. Conversely, the rights established by the Act may not be diminished by any employment benefit program or plan. For example, a provision of a CBA which provides for reinstatement to a position that is not equivalent because of seniority (*e.g.*, provides lesser pay) is superseded by FMLA. If an employer provides greater unpaid family leave rights than are afforded by FMLA, the employer is not required to extend additional rights afforded by FMLA, such as maintenance of health benefits (other than through COBRA), to the additional leave period not covered by FMLA. If an employee takes paid or unpaid leave and the employer does not designate the leave as FMLA leave, the leave taken does not count against an employee's FMLA entitlement.

(b) Nothing in this Act prevents an employer from amending existing leave and employee benefit programs, provided they comply with FMLA. However, nothing in the Act is intended to discourage employers from adopting or retaining more generous leave policies.

(c)(1) The Act does not apply to employees under a collective bargaining agreement (CBA) in effect on August 5, 1993, until February 5, 1994, or the date the agreement terminates (*i.e.*, its

expiration date), whichever is earlier. Thus, if the CBA contains family or medical leave benefits, whether greater or less than those under the Act, such benefits are not disturbed until the Act's provisions begin to apply to employees under that agreement. A CBA which provides no family or medical leave rights also continues in effect. For CBAs subject to the Railway Labor Act and other CBAs which do not have an expiration date for the general terms, but which may be reopened at specified times, *e.g.*, to amend wages and benefits, the first time the agreement is amended after August 5, 1993, shall be considered the termination date of the CBA, and the effective date for FMLA.

(2) As discussed in § 825.102(b), the period prior to the Act's delayed effective date must be considered in determining employer coverage and employee eligibility for FMLA leave.

§ 825.701 Do State laws providing family and medical leave still apply?

(a) Nothing in FMLA supersedes any provision of State or local law that provides greater family or medical leave rights than those provided by FMLA. The Department of Labor will not, however, enforce State family or medical leave laws, and States may not enforce the FMLA. Employees are not required to designate whether the leave they are taking is FMLA leave or leave under State law, and an employer must comply with the appropriate (applicable) provisions of both. An employer covered by one law and not the other has to comply only with the law under which it is covered. Similarly, an employee eligible under only one law must receive benefits in accordance with that law. If leave qualifies for FMLA leave and leave under State law, the leave used counts against the employee's entitlement under both laws. Examples of the interaction between FMLA and State laws include:

(1) If State law provides 16 weeks of leave entitlement over two years, an employee would be entitled to take 16 weeks one year under State law and 12 weeks the next year under FMLA. Health benefits maintenance under FMLA would be applicable only to the first 12 weeks of leave entitlement each year. If the employee took 12 weeks the first year, the employee would be entitled to a maximum of 12 weeks the second year under FMLA (not 16 weeks). An employee would not be entitled to 28 weeks in one year.

(2) If State law provides half-pay for employees temporarily disabled because of pregnancy for six weeks, the employee would be entitled to an additional six weeks of unpaid FMLA leave (or accrued paid leave).

(3) A shorter notice period under State law must be allowed by the employer unless an employer has already provided, or the employee is requesting, more leave than required under State law.

(4) If State law provides for only one medical certification, no additional certifications may be required by the employer unless the employer has already provided, or the employee is requesting, more leave than required under State law.

(5) If State law provides six weeks of leave, which may include leave to care for a seriously-ill grandparent or a ''spouse equivalent,'' and leave was used for that purpose, the employee is still entitled to 12 weeks of FMLA leave, as the leave used was provided for a purpose not covered by FMLA. If FMLA leave is used first for a purpose also provided under State law, and State leave has thereby been exhausted, the employer would not be required to provide additional leave to care for the grandparent or ''spouse equivalent.''

(6) If State law prohibits mandatory leave beyond the actual period of pregnancy disability, an instructional employee of an educational agency subject to special FMLA rules may not be required to remain on leave until the end of the academic term, as permitted by FMLA under certain circumstances. (See Subpart F of this part.)

§ 825.702 How does FMLA affect Federal and State anti-discrimination laws?

(a) Nothing in FMLA modifies or affects any Federal or State law prohibiting discrimination on the basis of race, religion, color, national origin, sex, age, or disability (e.g., Title VII of the Civil Rights Act of 1964, as amended by the Pregnancy Discrimination Act). FMLA's legislative history explains that FMLA is ''not intended to modify or affect the Rehabilitation Act of 1973, as amended, the regulations concerning employment which have been promulgated pursuant to that statute, or the Americans with Disabilities Act of 1990, or the regulations issued under that act. Thus, the leave provisions of the [FMLA] are wholly distinct from the reasonable accommodation obligations of employers covered under the [ADA], employers who receive Federal financial assistance, employers who contract with the Federal government, or the Federal government itself. The purpose of the FMLA is to make leave available to eligible employees and employers within its coverage, and not to limit already existing rights and protection.'' S. Rep. No. 3, 103d Cong., 1st Sess. 38 (1993). An employer must therefore provide leave under whichever statutory provision provides the greater rights to employees. When an employer violates both FMLA and a discrimination law, an employee may be able to recover under either or both statutes (double relief may not be awarded for the same loss; when remedies coincide a claimant may be allowed to utilize whichever avenue of relief is desired (*Laffey v. Northwest Airlines, Inc.*, 567 F.2d 429, 445 (D.C. Cir. 1976), *cert. denied*, 434 U.S. 1086 (1978))).

(b) If an employee is a qualified individual with a disability within the meaning of the Americans with Disabilities Act (ADA), the employer must make reasonable accommodations, *etc.*, barring undue hardship, in accordance with the ADA. At the same time, the employer must afford an employee his or her FMLA rights. ADA's ''disability'' and FMLA's ''serious health condition'' are different concepts, and must be analyzed separately. FMLA entitles eligible employees to 12 weeks of leave in any 12-month period, whereas the ADA allows an indeterminate amount of leave, barring undue hardship, as a reasonable accommodation. FMLA requires employers to maintain employees' group health plan coverage during FMLA leave on the same conditions as coverage would have been provided if the employee had been continuously employed during the leave period, whereas ADA does not require maintenance of health insurance unless other employees receive health insurance during leave under the same circumstances.

(c)(1) A reasonable accommodation under the ADA might be accomplished by providing an individual with a disability with a part-time job with no health benefits, assuming the employer did not ordinarily provide health insurance for part-time employees. However, FMLA would permit an employee to work a reduced leave schedule until the equivalent of 12 workweeks of leave were used, with group health benefits maintained during this period. FMLA permits an employer to temporarily transfer an employee who is taking leave intermittently or on a reduced leave schedule to an alternative position, whereas the ADA allows an accommodation of reassignment to an equivalent, vacant position only if the employee cannot perform the essential functions of the employee's present position and an accommodation is not possible in the employee's present position, or an accommodation in the employee's present position would cause an undue

hardship. The examples in the following paragraphs of this section demonstrate how the two laws would interact with respect to a qualified individual with a disability.

(2) A qualified individual with a disability who is also an ''eligible employee'' entitled to FMLA leave requests 10 weeks of medical leave as a reasonable accommodation, which the employer grants because it is not an undue hardship. The employer advises the employee that the 10 weeks of leave is also being designated as FMLA leave and will count towards the employee's FMLA leave entitlement. This designation does not prevent the parties from also treating the leave as a reasonable accommodation and reinstating the employee into the *same* job, as required by the ADA, rather than an equivalent position under FMLA, if that is the greater right available to the employee. At the same time, the employee would be entitled under FMLA to have the employer maintain group health plan coverage during the leave, as that requirement provides the greater right to the employee.

(3) If the same employee needed to work part-time (a reduced leave schedule) after returning to his or her same job, the employee would still be entitled under FMLA to have group health plan coverage maintained for the remainder of the two-week equivalent of FMLA leave entitlement, notwithstanding an employer policy that part-time employees do not receive health insurance. This employee would be entitled under the ADA to reasonable accommodations to enable the employee to perform the essential functions of the part-time position. In addition, because the employee is working a part-time schedule as a reasonable accommodation, the employee would be shielded from FMLA's provision for temporary assignment to a different alternative position. Once the employee has exhausted his or her remaining FMLA leave entitlement while working the reduced (part-time) schedule, if the employee is a qualified individual with a disability, and if the employee is unable to return to the same full-time position at that time, the employee might continue to work part-time as a reasonable accommodation, barring undue hardship; the employee would then be entitled to only those employment benefits ordinarily provided by the employer to part-time employees.

(4) At the end of the FMLA leave entitlement, an employer is required under FMLA to reinstate the employee in the same or an equivalent position, with equivalent pay and benefits, to that which the employee held when leave commenced. The employer's FMLA obligations would be satisfied if the employer offered the employee an equivalent full-time position. If the employee were unable to perform the essential functions of that equivalent position even with reasonable accommodation, because of a disability, the ADA may require the employer to make a reasonable accommodation at that time by allowing the employee to work part-time or by reassigning the employee to a vacant position, barring undue hardship.

(d)(1) If FMLA entitles an employee to leave, an employer may not, in lieu of FMLA leave entitlement, *require* an employee to take a job with a reasonable accommodation. However, ADA may require that an employer offer an employee the opportunity to take such a position. An employer may not change the essential functions of the job in order to deny FMLA leave. See § 825.220(b).

(2) An employee may be on a workers' compensation absence due to an on-the-job injury or illness which also qualifies as a serious health condition under FMLA. The workers' compensation absence and FMLA leave may run concurrently (subject to proper notice and designation by the employer). At some point the health care provider providing medical care pursuant to the workers' compensation injury may certify the employee is able to return to work in a ''light duty'' position. If the employer offers such a position, the employee is permitted but not required to accept the position (*see* § 825.220(d)). As a result, the employee may no longer qualify for payments from the workers' compensation benefit plan, but the employee is entitled to continue on unpaid FMLA leave either until the employee is able to return to the same or equivalent job the employee left or until the 12-week FMLA leave entitlement is exhausted. See § 825.207(d)(1). If the employee returning from the workers' compensation injury is a qualified individual with a disability, he or she will have rights under the ADA.

(e) If an employer requires certifications of an employee's fitness for duty to return to work, as permitted by FMLA under a uniform policy, it must comply with the ADA requirement that a fitness for duty physical be job-related and consistent with business necessity.

(f) Under Title VII of the Civil Rights Act of 1964, as amended by the Pregnancy Discrimination Act, an employer should provide the same benefits for women who are pregnant as the employer provides to other employees with short-term disabilities. Because Title VII does not require employees to be employed for a certain period of time to be protected, an employee employed for less than 12 months by the employer (and, therefore, not an ''eligible'' employee under FMLA) may *not* be denied maternity leave if the employer normally provides short-term disability benefits to employees with the same tenure who are experiencing other short-term disabilities.

(g) For further information on Federal antidiscrimination laws, including Title VII and the ADA, individuals are encouraged to contact the nearest office of the U.S. Equal Employment Opportunity Commission.

Subpart H—Definitions

§ 825.800 Definitions.

For purposes of this part:

Act or FMLA means the Family and Medical Leave Act of 1993, Public Law 103–3 (February 5, 1993), 107 Stat. 6 (29 U.S.C. 2601 *et seq.*)

ADA means the Americans With Disabilities Act (42 USC 12101 *et seq.*)

Administrator means the Administrator of the Wage and Hour Division, Employment Standards Administration, U.S. Department of Labor, and includes any official of the Wage and Hour Division authorized to perform any of the functions of the Administrator under this part.

COBRA means the continuation coverage requirements of Title X of the Consolidated Omnibus Budget Reconciliation Act of 1986, As Amended (Pub.L. 99–272, title X, section 10002; 100 Stat 227; 29 U.S.C. 1161–1168).

Commerce and industry or activity affecting commerce mean any activity, business, or industry in commerce or in which a labor dispute would hinder or obstruct commerce or the free flow of commerce, and include ''commerce'' and any ''industry affecting commerce'' as defined in sections 501(1) and 501(3) of the Labor Management Relations Act of 1947, 29 U.S.C. 142(1) and (3).

Continuing treatment means: A serious health condition involving continuing treatment by a health care provider includes any one or more of the following:

(1) A period of *incapacity* (*i.e.*, inability to work, attend school or perform other regular daily activities due to the serious health condition, treatment therefor, or recovery therefrom) of more than three consecutive calendar days, and any subsequent treatment or period of

incapacity relating to the same condition, that also involves:

(i) Treatment two or more times by a health care provider, by a nurse or physician's assistant under direct supervision of a health care provider, or by a provider of health care services (*e.g.*, physical therapist) under orders of, or on referral by, a health care provider; or

(ii) Treatment by a health care provider on at least one occasion which results in a regimen of continuing treatment under the supervision of the health care provider.

(2) Any period of incapacity due to pregnancy, or for prenatal care.

(3) Any period of incapacity or treatment for such incapacity due to a chronic serious health condition. A chronic serious health condition is one which:

(i) Requires periodic visits for treatment by a health care provider, or by a nurse or physician's assistant under direct supervision of a health care provider;

(ii) Continues over an extended period of time (including recurring episodes of a single underlying condition); and

(iii) May cause episodic rather than a continuing period of incapacity (*e.g.*, asthma, diabetes, epilepsy, *etc.*).

(4) A period of incapacity which is permanent or long-term due to a condition for which treatment may not be effective. The employee or family member must be under the continuing supervision of, but need not be receiving active treatment by, a health care provider. Examples include Alzheimer's, a severe stroke, or the terminal stages of a disease.

(5) Any period of absence to receive multiple treatments (including any period of recovery therefrom) by a health care provider or by a provider of health care services under orders of, or on referral by, a health care provider, either for restorative surgery after an accident or other injury, or for a condition that would likely result in a period of incapacity of more than three consecutive calendar days in the absence of medical intervention or treatment, such as cancer (chemotherapy, radiation, *etc.*), severe arthritis (physical therapy), kidney disease (dialysis).

Eligible employee means:

(1) An employee who has been employed for a total of at least 12 months by the employer on the date on which any FMLA leave is to commence; and

(2) Who, on the date on which any FMLA leave is to commence, has been employed for at least 1,250 hours of service with such employer during the previous 12-month period; and

(3) Who is employed in any State of the United States, the District of Columbia or any Territories or possession of the United States.

(4) Excludes any Federal officer or employee covered under subchapter V of chapter 63 of title 5, United States Code; and

(5) Excludes any employee of the U.S. Senate or the U.S. House of Representatives covered under title V of the FMLA; and

(6) Excludes any employee who is employed at a worksite at which the employer employs fewer than 50 employees if the total number of employees employed by that employer within 75 miles of that worksite is also fewer than 50.

(7) Excludes any employee employed in any country other than the United States or any Territory or possession of the United States.

Employ means to suffer or permit to work.

Employee has the meaning given the same term as defined in section 3(e) of the Fair Labor Standards Act, 29 U.S.C. 203(e), as follows:

(1) The term ''employee'' means any individual employed by an employer;

(2) In the case of an individual employed by a public agency, ''employee'' means—

(i) Any individual employed by the Government of the United States—

(A) As a civilian in the military departments (as defined in section 102 of Title 5, United States Code),

(B) In any executive agency (as defined in section 105 of Title 5, United States Code), excluding any Federal officer or employee covered under subchapter V of chapter 63 of Title 5, United States Code,

(C) In any unit of the legislative or judicial branch of the Government which has positions in the competitive service, excluding any employee of the U.S. Senate or U.S. House of Representatives who is covered under Title V of FMLA,

(D) In a nonappropriated fund instrumentality under the jurisdiction of the Armed Forces, or

(ii) Any individual employed by the United States Postal Service or the Postal Rate Commission; and

(iii) Any individual employed by a State, political subdivision of a State, or an interstate governmental agency, other than such an individual—

(A) Who is not subject to the civil service laws of the State, political subdivision, or agency which employs the employee; and

(B) Who—

(*1*) Holds a public elective office of that State, political subdivision, or agency,

(*2*) Is selected by the holder of such an office to be a member of his personal staff,

(*3*) Is appointed by such an officeholder to serve on a policymaking level,

(*4*) Is an immediate adviser to such an officeholder with respect to the constitutional or legal powers of the office of such officeholder, or

(*5*) Is an employee in the legislative branch or legislative body of that State, political subdivision, or agency and is not employed by the legislative library of such State, political subdivision, or agency.

Employee employed in an instructional capacity. See Teacher.

Employer means any person engaged in commerce or in an industry or activity affecting commerce who employs 50 or more employees for each working day during each of 20 or more calendar workweeks in the current or preceding calendar year, and includes—

(1) Any person who acts, directly or indirectly, in the interest of an employer to any of the employees of such employer;

(2) Any successor in interest of an employer; and

(3) Any public agency.

Employment benefits means all benefits provided or made available to employees by an employer, including group life insurance, health insurance, disability insurance, sick leave, annual leave, educational benefits, and pensions, regardless of whether such benefits are provided by a practice or written policy of an employer or through an ''employee benefit plan'' as defined in section 3(3) of the Employee Retirement Income Security Act of 1974, 29 U.S.C. 1002(3). The term does not include non-employment related obligations paid by employees through voluntary deductions such as supplemental insurance coverage. (See § 825.209(a)).

FLSA means the Fair Labor Standards Act (29 U.S.C. 201 et seq.).

Group health plan means any plan of, or contributed to by, an employer (including a self-insured plan) to provide health care (directly or otherwise) to the employer's employees, former employees, or the families of such employees or former employees. For purposes of FMLA the term ''group health plan'' shall not include an insurance program providing health coverage under which employees purchase individual policies from insurers provided that:

(1) No contributions are made by the employer;

(2) Participation in the program is completely voluntary for employees;

(3) The sole functions of the employer with respect to the program are, without endorsing the program, to permit the insurer to publicize the program to employees, to collect premiums through payroll deductions and to remit them to the insurer;

(4) The employer receives no consideration in the form of cash or otherwise in connection with the program, other than reasonable compensation, excluding any profit, for administrative services actually rendered in connection with payroll deduction; and,

(5) the premium charged with respect to such coverage does not increase in the event the employment relationship terminates.

Health care provider means:

(1) A doctor of medicine or osteopathy who is authorized to practice medicine or surgery by the State in which the doctor practices; or

(2) Podiatrists, dentists, clinical psychologists, optometrists, and chiropractors (limited to treatment consisting of manual manipulation of the spine to correct a subluxation as demonstrated by X-ray to exist) authorized to practice in the State and performing within the scope of their practice as defined under State law; and

(3) Nurse practitioners, nurse-midwives and clinical social workers who are authorized to practice under State law and who are performing within the scope of their practice as defined under State law; and

(4) Christian Science practitioners listed with the First Church of Christ, Scientist in Boston, Massachusetts.

(5) Any health care provider from whom an employer or a group health plan's benefits manager will accept certification of the existence of a serious health condition to substantiate a claim for benefits.

(6) A health care provider as defined above who practices in a country other than the United States, who is licensed to practice in accordance with the laws and regulations of that country.

''Incapable of self-care'' means that the individual requires active assistance or supervision to provide daily self-care in several of the ''activities of daily living'' (ADLs) or ''instrumental activities of daily living'' (IADLs). Activities of daily living include adaptive activities such as caring appropriately for one's grooming and hygiene, bathing, dressing and eating. Instrumental activities of daily living include cooking, cleaning, shopping, taking public transportation, paying bills, maintaining a residence, using telephones and directories, using a post office, etc.

Instructional employee: See *Teacher.*

Intermittent leave means leave taken in separate periods of time due to a single illness or injury, rather than for one continuous period of time, and may include leave of periods from an hour or more to several weeks. Examples of intermittent leave would include leave taken on an occasional basis for medical appointments, or leave taken several days at a time spread over a period of six months, such as for chemotherapy.

Mental disability: See *Physical* or mental disability.

Parent means the biological parent of an employee or an individual who stands or stood in loco parentis to an employee when the employee was a child.

Person means an individual, partnership, association, corporation, business trust, legal representative, or any organized group of persons, and includes a public agency for purposes of this part.

Physical or mental disability means a physical or mental impairment that substantially limits one or more of the major life activities of an individual. Regulations at 29 CFR Part 1630.2(h), (i), and (j), issued by the Equal Employment Opportunity Commission under the Americans with Disabilities Act (ADA), 42 U.S.C. 12101 *et seq.*, define these terms.

Public agency means the government of the United States; the government of a State or political subdivision thereof; any agency of the United States (including the United States Postal Service and Postal Rate Commission), a State, or a political subdivision of a State, or any interstate governmental agency. Under section 101(5)(B) of the Act, a public agency is considered to be a ''person'' engaged in commerce or in an industry or activity affecting commerce within the meaning of the Act.

Reduced leave schedule means a leave schedule that reduces the usual number of hours per workweek, or hours per workday, of an employee.

Secretary means the Secretary of Labor or authorized representative.

Serious health condition entitling an employee to FMLA leave means:

(1) an illness, injury, impairment, or physical or mental condition that involves:

(i) *Inpatient care* (*i.e.*, an overnight stay) in a hospital, hospice, or residential medical care facility, including any period of *incapacity* (for purposes of this section, defined to mean inability to work, attend school or perform other regular daily activities due to the serious health condition, treatment therefor, or recovery therefrom), or any subsequent treatment in connection with such inpatient care; or

(ii) *Continuing treatment* by a health care provider. A serious health condition involving continuing treatment by a health care provider includes:

(A) A period of *incapacity* (*i.e.*, inability to work, attend school or perform other regular daily activities due to the serious health condition, treatment therefore, or recovery therefrom) of more than three consecutive calendar days, including any subsequent treatment or period of incapacity relating to the same condition, that also involves:

(*1*) Treatment two or more times by a health care provider, by a nurse or physician's assistant under direct supervision of a health care provider, or by a provider of health care services (*e.g.*, physical therapist) under orders of, or on referral by, a health care provider; or

(*2*) Treatment by a health care provider on at least one occasion which results in a regimen of continuing treatment under the supervision of the health care provider.

(B) Any period of incapacity due to pregnancy, or for prenatal care.

(C) Any period of incapacity or treatment for such incapacity due to a chronic serious health condition. A chronic serious health condition is one which:

(*1*) Requires periodic visits for treatment by a health care provider, or by a nurse or physician's assistant under direct supervision of a health care provider;

(*2*) Continues over an extended period of time (including recurring episodes of a single underlying condition); and

(*3*) May cause episodic rather than a continuing period of incapacity (*e.g.*, asthma, diabetes, epilepsy, *etc.*).

(D) A period of incapacity which is permanent or long-term due to a condition for which treatment may not be effective. The employee or family member must be under the continuing supervision of, but need not be receiving active treatment by, a health care provider. Examples include Alzheimer's, a severe stroke, or the terminal stages of a disease.

(E) Any period of absence to receive multiple treatments (including any period of recovery therefrom) by a health care provider or by a provider of health care services under orders of, or on referral by, a health care provider,

either for restorative surgery after an accident or other injury, or for a condition that would likely result in a period of incapacity of more than three consecutive calendar days in the absence of medical intervention or treatment, such as cancer (chemotherapy, radiation, *etc.*), severe arthritis (physical therapy), kidney disease (dialysis).

(2) Treatment for purposes of paragraph (1) of this definition includes (but is not limited to) examinations to determine if a serious health condition exists and evaluations of the condition. Treatment does not include routine physical examinations, eye examinations, or dental examinations. Under paragraph (1)(ii)(A)(*2*) of this definition, a regimen of continuing treatment includes, for example, a course of prescription medication (*e.g.*, an antibiotic) or therapy requiring special equipment to resolve or alleviate the health condition (*e.g.*, oxygen). A regimen of continuing treatment that includes the taking of over-the-counter medications such as aspirin, antihistamines, or salves; or bed-rest, drinking fluids, exercise, and other similar activities that can be initiated without a visit to a health care provider, is not, by itself, sufficient to constitute a regimen of continuing treatment for purposes of FMLA leave.

(3) Conditions for which cosmetic treatments are administered (such as most treatments for acne or plastic surgery) are not ''serious health conditions'' unless inpatient hospital care is required or unless complications develop. Ordinarily, unless complications arise, the common cold, the flu, ear aches, upset stomach, ulcers, headaches other than migraine, routine dental or orthodontia problems, periodontal disease, etc., are examples of conditions that do not meet the definition of a serious health condition and do not qualify for FMLA leave. Restorative dental or plastic surgery after an injury or removal of cancerous growths are serious health conditions provided all the other conditions of this regulation are met. Mental illness resulting from stress or allergies may be serious health conditions, but only if all the conditions of this section are met.

(4) Substance abuse may be a serious health condition if the conditions of this section are met. However, FMLA leave may only be taken for treatment for substance abuse by a health care provider or by a provider of health care services on referral by a health care provider. On the other hand, absence because of the employee's use of the substance, rather than for treatment, does not qualify for FMLA leave.

(5) Absences attributable to incapacity under paragraphs (1)(ii) (B) or (C) of this definition qualify for FMLA leave even though the employee or the immediate family member does not receive treatment from a health care provider during the absence, and even if the absence does not last more than three days. For example, an employee with asthma may be unable to report for work due to the onset of an asthma attack or because the employee's health care provider has advised the employee to stay home when the pollen count exceeds a certain level. An employee who is pregnant may be unable to report to work because of severe morning sickness.

Son or daughter means a biological, adopted, or foster child, a stepchild, a legal ward, or a child of a person standing *in loco parentis*, who is under 18 years of age or 18 years of age or older and incapable of self-care because of a mental or physical disability.

Spouse means a husband or wife as defined or recognized under State law for purposes of marriage in the State where the employee resides, including common law marriage in States where it is recognized.

State means any State of the United States or the District of Columbia or any Territory or possession of the United States.

Teacher (or employee employed in an instructional capacity, or instructional employee) means an employee employed principally in an instructional capacity by an educational agency or school whose principal function is to teach and instruct students in a class, a small group, or an individual setting, and includes athletic coaches, driving instructors, and special education assistants such as signers for the hearing impaired. The term does not include teacher assistants or aides who do not have as their principal function actual teaching or instructing, nor auxiliary personnel such as counselors, psychologists, curriculum specialists, cafeteria workers, maintenance workers, bus drivers, or other primarily noninstructional employees.

Appendix A to Part 825—Index

The citations listed in this Appendix are to sections in 29 CFR Part 825.

1,250 hours of service 825.110, 825.800
12 workweeks of leave 825.200, 825.202, 825.205
12-month period 825.110, 825.200, 825.201, 825.202, 825.500, 825.800
20 or more calendar workweeks 825.104(a), 825.105, 825.108(d), 825.800
50 or more employees 825.102, 825.105, 825.106(f), 825.108(d), 825.109(e), 825.111(d), 825.600(b)
75 miles of worksite/radius 825.108(d), 825.109(e), 825.110, 825.111, 825.202(b), 825.213(a), 825.217, 825.600(b), 825.800
Academic term 825.600(c), 825.602, 825.603, 825.701(a)
Adoption 825.100(a), 825.101(a), 825.112, 825.200(a), 825.201, 825.202(a), 825.203, 825.207(b), 825.302, 825.304(c)
Alternative position 825.117, 825.204, 825.601
Americans with Disabilities Act 825.113(c), 825.115, 825.204(b), 825.215(b), 825.310(b), 825.702(b), 825.800 as soon as practicable 825.219(a), 825.302, 825.303
Birth/birth of a child 825.100(a), 825.101(a), 825.103(c), 825.112, 825.200(a), 825.201, 825.202, 825.203, 825.207, 825.209(d), 825.302(a), 825.302(c)
Certification requirements 825.207(g), 825.305, 825.306, 825.310, 825.311
Christian science practitioners 825.118(b), 825.800
COBRA 825.209(f), 825.210(c), 825.213(d), 825.309(b), 825.700(a), 825.800
Collective bargaining agreements 825.102(a), 825.211(a), 825.604, 825.700
Commerce 825.104, 825.800
Complaint 825.220, 825.400, 825.401, 825.500(a)
Continuing treatment by a health care provider 825.114, 825.800
Definitions 825.800
Designate paid leave as FMLA 825.208
Disability insurance 825.213(f), 825.215(d)
Discharging 825.106(f), 825.220
Discriminating 825.106(f), 825.220
Educational institutions 825.111(c), 825.600
Effective date 825.102, 825.103, 825.110(e), 825.700(c)
Eligible employee 825.100, 825.110, 825.111, 825.112, 825.200, 825.202, 825.206(b), 825.207, 825.216(c), 825.217, 825.312, 825.600(b), 825.601, 825.800
Employer 825.104, 825.105, 825.106, 825.107, 825.108, 825.109, 825.111, 825.800
Enforcement 825.400–825.404
Equivalent benefits 825.213(f), 825.214, 825.215(d)
Equivalent pay 825.100(c), 825.117, 825.204(c), 825.215, 825.601(a), 825.702(c)
Eequivalent position 825.100(c), 825.214, 825.215, 825.218(b), 825.604, 825.702(c)
Farm Credit Administration 825.109(b)
Fitness for duty 825.216(c), 825.310, 825.702(e)
Foster care 825.100(a), 825.112, 825.200(a), 825.201, 825.202(a), 825.203(a), 825.207(b), 825.302(a)
Government Printing Office 825.109(d)
Group health plan 825.209, 825.213, 825.800
Health benefits 825.100(b), 825.106(e), 825.209, 825.210, 825.211, 825.212, 825.215(d), 825.219, 825.220(c), 825.301(c), 825.309, 825.312, 825.603, 825.700, 825.702(c)
Health care provider 825.100(d), 825.114, 825.115, 825.118, 825.302, 825.305, 825.306, 825.307, 825.310(a), 825.800
Health plan premiums 825.210, 825.213(a)
Husband and wife 825.202
In loco parentis 825.113, 825.800
Incapable of self-care 825.113(c), 825.800

Industry affecting commerce 825.104, 825.800
Instructional employee 825.601, 825.602, 825.604, 825.701(f), 825.800
Integrated employer 825.104(c)
Intermittent leave 825.116(c), 825.117, 825.203, 825.302(f), 825.600(c), 825.601, 825.800
Joint employment 825.104(c), 825.105, 825.106
Key employee 825.209(g), 825.213(a), 825.217, 825.218, 825.219, 825.301(c), 825.312(f)
Library of Congress 825.109(b), 825.800
Life insurance 825.213(f), 825.215(d), 825.800
Maintain health benefits 825.209, 825.212, 825.215(d), 825.301(c), 825.309, 825.603
Medical certification 825.116, 825.213(a), 825.301(c), 825.302(c), 825.305, 825.306, 825.307, 825.308, 825.310, 825.311, 825.312(b), 825.701(d)
Medical necessity 825.114(d), 825.117, 825.306(d)
Multi-employer health plans 825.211
Needed to care for 825.100(a), 825.114(d), 825.116, 825.207(c)
Not foreseeable 825.303, 825.311(b)
Notice 825.100(d), 825.103(b), 825.110(d), 825.200(d), 825.207(g), 825.208(a), 825.208(c), 825.209(d), 825.210(e), 825.219(a), 825.219(b), 825.220(c), 825.300, 825.301(c), 825.302, 825.303, 825.304, 825.309, 825.310(c), 825.310(d), 825.312(a), 825.402, 825.403(b), 825.601(b), 825.701(a)
Notice requirements 825.110(d), 825.301(c), 825.302(g), 825.304(a), 825.304(e), 825.601(b)
Paid leave 825.100(a), 825.207, 825.208, 825.210, 825.213(c), 825.217(c), 825.219(c), 825.301(c), 825.304(d), 825.700(a), 825.701(a)
Parent 825.100(a), 825.101(a), 825.112, 825.113, 825.116(a), 825.200(a), 825.202(a), 825.207(b), 825.213(a), 825.305(a), 825.306(d), 825.800
Physical or mental disability 825.113(c), 825.114, 825.215(b), 825.500(e), 825.800
Placement of a child 825.100(a), 825.201, 825.203(a), 825.207(b)
Postal Rate Commission 825.109(b), 825.800
Posting requirement 825.300, 825.402
Premium payments 825.100(b), 825.210, 825.212, 825.213(f), 825.301(c), 825.308(d), 825.500(c)
Private employer 825.105, 825.108(b)
Public agency 825.104(a), 825.108, 825.109, 825.800
Recertification 825.301(c), 825.308
Records 825.110(c), 825.206(a), 825.500
Reduced leave schedule 825.111(d), 825.114(d), 825.116(c), 825.117, 825.203, 825.205, 825.302(f), 825.306(d), 825.500(c), 825.601, 825.702(c), 825.800
Restoration 825.100(d), 825.106(e), 825.209(g), 825.213(a), 825.216, 825.218, 825.219, 825.301(c), 825.311(c), 825.312
Returning to work 825.214
Right to reinstatement 825.100(c), 825.209(g), 825.214(b), 825.216(a), 825.219, 825.301(c), 825.311(c), 825.312, 825.400, 825.700
Secondary employer 825.106(f)
Serious health condition 825.100, 825.101(a), 825.112(a), 825.114, 825.116(a), 825.200(a), 825.202(a), 825.203, 825.204(a), 825.206(b), 825.207, 825.213, 825.215(b), 825.301(c), 825.302, 825.303, 825.305, 825.306, 825.308(d), 825.310(a), 825.311(c), 825.312(b), 825.601(a), 825.602(a), 825.800
Son or daughter 825.112(a), 825.113(c), 825.202(a), 825.800
Spouse 825.100(a), 825.101(a), 825.112(a), 825.113(a), 825.200(a), 825.202, 825.213(a), 825.303(b), 825.305(a), 825.306(d), 825.701(a), 825.800
State laws 825.701
Substantial and grievous economic injury 825.213(a), 825.216(c), 825.218, 825.219, 825.312(f)
Successor in interest 825.104(a), 825.107, 825.800
Teacher(s) 825.110(c), 825.600(c), 825.800
U.S. Tax Court 825.109(b)
Unpaid leave 825.100, 825.101(a), 825.105(b), 825.206, 825.208, 825.601(b)
Waive rights 825.220(d)
Workers' compensation 825.207(d)(1), 825.210(f), 825.216(d), 825.307(a)(1), 825.720(d)(1)
Worksite 825.108(d), 825.110(a), 825.111, 825.213(a), 825.214(e), 825.217, 825.220(b), 825.304(c), 825.800

BILLING CODE 4510–27–P

Appendix B to Part 825—Certification of Physician or Practitioner (Optional Form WH–380)

Certification of Health Care Provider
(Family and Medical Leave Act of 1993)

1. Employee's Name:

2. Patient's Name (if different from employee):

3. The attached sheet describes what is meant by a **"serious health condition"** under the Family and Medical Leave Act. Does the patient's condition[1] qualify under any of the categories described? If so, please check the applicable category.

(1)___ (2)___ (3)___ (4)___ (5)___ (6)___ , or None of the above _____

4. Describe the **medical facts** which support your certification, including a brief statement as to how the medical facts meet the criteria of one of these categories:

5.a. State the approximate **date** the condition commenced, and the probable **duration** of the condition (and also the probable duration of the patient's present **incapacity**[2] if different):

b. Will it be necessary for the employee to take work only **intermittently or to work on a less than full** schedule as a result of the condition (including for treatment described in Item 6 below)? _____

If yes, give the probable duration:

c. If the condition is a **chronic condition** (condition #4) or **pregnancy**, state whether the patient is presently incapacitated[2] and the likely duration and frequency of **episodes of incapacity**[2]:

6.a. If additional **treatments** will be required for the condition, provide an estimate of the probable number of such treatments:

If the patient will be absent from work or other daily activities because of **treatment** on an **intermittent** or **part-time** basis, also provide an estimate of the probable number and interval between such treatments, actual or estimated dates of treatment if known, and period required for recovery if any:

b. If any of these treatments will be provided by **another provider of health services** (e.g., physical therapist), please state the nature of the treatments:

---

[1] Here and elsewhere on this form, the information sought relates **only** to the condition for which the employee is taking FMLA leave.

[2] "Incapacity," for purposes of FMLA, is defined to mean inability to work, attend school or perform other regular daily activities due to the serious health condition, treatment therefor, or recovery therefrom.

c. If a **regimen of continuing treatment** by the patient is required under your supervision, provide a general description of such regimen (e.g., prescription drugs, physical therapy requiring special equipment):

7.a. If medical leave is required for the employee's **absence from work** because of the **employee's own condition** (including absences due to pregnancy or a chronic condition), is the employee **unable to perform** work of any kind? _____

b. If able to perform some work, is the employee **unable to perform any one or more of the essential functions of the employee's job** (the employee or the employer should supply you with information about the essential job functions)? _____ If yes, please list the essential functions the employee is unable to perform:

c. If neither a. nor b. applies, is it necessary for the employee to be **absent from work for treatment**? _____

8.a. If leave is required to **care for a family member** of the employee with a serious health condition, **does** the patient **require assistance** for basic medical or personal needs or safety, or for transportation?_____

b. If no, would the employee's presence to provide **psychological comfort** be beneficial to the patient or assist in the patient's recovery?_____

c. If the patient will need care only **intermittently** or on a part-time basis, please indicate the probable duration of this need:

_____ _____
(Signature of Health Care Provider) (Type of Practice)

_____ _____
(Address) (Telephone number)

To be completed by the employee needing family leave to care for a family member:

State the care you will provide and an estimate of the period during which care will be provided, including a schedule if leave is to be taken intermittently or if it will be necessary for you to work less than a full schedule:

_____ _____
(Employee signature) (date)

A **"Serious Health Condition"** means an illness, injury, impairment, or physical or mental condition that involves one of the following:

1. Hospital Care

Inpatient care (*i.e.*, an overnight stay) in a hospital, hospice, or residential medical care facility, including any period of incapacity[2] or subsequent treatment in connection with or consequent to such inpatient care.

2. Absence Plus Treatment

(a) A period of incapacity[2] of **more than three consecutive calendar days** (including any subsequent treatment or period of incapacity[2] relating to the same condition), that also involves:

(1) **Treatment**[3] **two or more times** by a health care provider, by a nurse or physician's assistant under direct supervision of a health care provider, or by a provider of health care services (*e.g.*, physical therapist) under orders of, or on referral by, a health care provider; *or*

(2) **Treatment** by a health care provider on **at least one occasion** which results in a **regimen of continuing treatment**[4] under the supervision of the health care provider.

3. Pregnancy

Any period of incapacity due to **pregnancy**, or for **prenatal care**.

4. Chronic Conditions Requiring Treatments

A **chronic condition** which:

(1) Requires **periodic visits** for treatment by a health care provider, or by a nurse or physician's assistant under direct supervision of a health care provider;

(2) Continues over an **extended period of time** (including recurring episodes of a single underlying condition); and

(3) May cause **episodic** rather than a continuing period of incapacity[2] (e.g., asthma, diabetes, epilepsy, etc.).

5. Permanent/Long-term Conditions Requiring Supervision

A period of **incapacity**[2] **which is permanent or long-term** due to a condition for which treatment may not be effective. The employee or family member must be **under the continuing supervision of, but need not be**

---

[3] Treatment includes examinations to determine if a serious health condition exists and evaluations of the condition. Treatment does not include routine physical examinations, eye examinations, or dental examinations.

[4] A regimen of continuing treatment includes, for example, a course of prescription medication (*e.g.*, an antibiotic) or therapy requiring special equipment to resolve or alleviate the health condition. A regimen of treatment does not include the taking of over-the-counter medications such as aspirin, antihistamines, or salves; or bed-rest, drinking fluids, exercise, and other similar activities that can be initiated without a visit to a health care provider.

receiving active treatment by, a health care provider. Examples include Alzheimer's, a severe stroke, or the terminal stages of a disease.

6. Multiple Treatments (Non-Chronic Conditions)

Any period of absence to receive **multiple treatments** (including any period of recovery therefrom) by a health care provider or by a provider of health care services under orders of, or on referral by, a health care provider, either for **restorative surgery** after an accident or other injury, **or** for a condition that **would likely result in a period of incapacity[2] of more than three consecutive calendar days in the absence of medical intervention or treatment,** such as cancer (chemotherapy, radiation, etc.), severe arthritis (physical therapy), kidney disease (dialysis).

Appendix C to Part 825—Notice to Employees of Rights under FMLA (WH Publication 1420)

Appendix C to Part 825 — Notice to Employees of Rights under FMLA (WH Publication 1420)

Your Rights Under The Family and Medical Leave Act of 1993

FMLA requires covered employers to provide up to 12 weeks of unpaid, job-protected leave to "eligible" employees for certain family and medical reasons. Employees are eligible if they have worked for a covered employer for at least one year, and for 1,250 hours over the previous 12 months, and if there are at least 50 employees within 75 miles.

Reasons For Taking Leave:

Unpaid leave must be granted for *any* of the following reasons:

- to care for the employee's child after birth, or placement for adoption or foster care;
- to care for the employee's spouse, son or daughter, or parent, who has a serious health condition; or
- for a serious health condition that makes the employee unable to perform the employee's job.

At the employee's or employer's option, certain kinds of *paid* leave may be substituted for unpaid leave.

Advance Notice and Medical Certification:

The employee may be required to provide advance leave notice and medical certification. Taking of leave may be denied if requirements are not met.

- The employee ordinarily must provide 30 days advance notice when the leave is "foreseeable."
- An employer may require medical certification to support a request for leave because of a serious health condition, and may require second or third opinions (at the employer's expense) and a fitness for duty report to return to work.

Job Benefits and Protection:

- For the duration of FMLA leave, the employer must maintain the employee's health coverage under any "group health plan."
- Upon return from FMLA leave, most employees must be restored to their original or equivalent positions with equivalent pay, benefits, and other employment terms.
- The use of FMLA leave cannot result in the loss of any employment benefit that accrued prior to the start of an employee's leave.

Unlawful Acts By Employers:

FMLA makes it unlawful for any employer to:

- interfere with, restrain, or deny the exercise of any right provided under FMLA:
- discharge or discriminate against any person for opposing any practice made unlawful by FMLA or for involvement in any proceeding under or relating to FMLA.

Enforcement

- The U.S. Department of Labor is authorized to investigate and resolve complaints of violations.
- An eligible employee may bring a civil action against an employer for violations.

FMLA does not affect any Federal or State law prohibiting discrimination, or supersede any State or local law or collective bargaining agreement which provides greater family or medical leave rights.

For Additional Information:

Contact the nearest office of the Wage and Hour Division, listed in most telephone directories under U.S. Government, Department of Labor.

U.S. Department of Labor
Employment Standards Administration
Wage and Hour Division
Washington, D.C. 20210

WH Publication 1420
June 1993

Appendix D to Part 825—Prototype Notice: Employer Response to Employee Request for Family and Medical Leave (Form WH–381)

Employer Response to Employee
Request for Family or Medical Leave
(Optional use form - see 29 CFR §825.301(c))

U.S. Department of Labor
Employment Standards Administration
Wage and Hour Division

(Family and Medical Leave Act of 1993)

(Date)

TO : _____
(*Employee's name*)

FROM: _____
(*Name of appropriate employer representative*)

SUBJECT: Request for Family/Medical Leave

On _____, you notified us of your need to take family/medical leave due to:
(*date*)

☐ the birth of your child, or the placement of a child with you for adoption or foster care; or

☐ a serious health condition that makes you unable to perform the essential functions of your job; or

☐ a serious health condition affecting your ☐ spouse, ☐ child, ☐ parent, for which you are needed to provide care.

You notified us that you need this leave beginning on _____ and that you expect leave to continue until on or about _____.
(*date*) (*date*)

Except as explained below, you have a right under the FMLA for up to 12 weeks of unpaid leave in a 12-month period for the reasons listed above. Also, your health benefits must be maintained during any period of unpaid leave under the same conditions as if you continued to work, and you must be reinstated to the same or an equivalent job with the same pay, benefits, and terms and conditions of employment on your return from leave. If you do not return to work following FMLA leave for a reason other than: (1) the continuation, recurrence, or onset of a serious health condition which would entitle you to FMLA leave; or (2) other circumstances beyond your control, you may be required to reimburse us for our share of health insurance premiums paid on your behalf during your FMLA leave.

This is to inform you that: (*check appropriate boxes; explain where indicated*)

1. You are ☐ eligible ☐ not eligible for leave under the FMLA.

2. The requested leave ☐ will ☐ will not be counted against your annual FMLA leave entitlement.

3. You ☐ will ☐ will not be required to furnish medical certification of a serious health condition. If required, you must furnish certification by _____ (*insert date*) (must be at least 15 days after you are notified of this requirement) or we may delay the commencement of your leave until the certification is submitted.

4. You may elect to substitute accrued paid leave for unpaid FMLA leave. We ☐ will ☐ will not require that you substitute accrued paid leave for unpaid FMLA leave. If paid leave will be used the following conditions will apply: (*Explain*)

5(a). If you normally pay a portion of the premiums for your health insurance, these payments will continue during the period of FMLA leave. Arrangements for payment have been discussed with you and it is agreed that you will make premium payments as follows: (*Set forth dates, e.g., the 10th of each month, or pay periods, etc. that specifically cover the agreement with the employee.*)

(b). You have a minimum 30-day (*or, indicate longer period, if applicable*) grace period in which to make premium payments. If payment is not made timely, your group health insurance may be cancelled, provided we notify you in writing at least 15 days before the date that your health coverage will lapse, or, at our option, we may pay your share of the premiums during FMLA leave, and recover these payments from you upon your return to work. We ☐ will ☐ will not pay your share of health insurance premiums while you are on leave.

(c). We ☐ will ☐ will not do the same with other benefits (e.g., life insurance, disability insurance, etc.) while you are on FMLA leave. If we do pay your premiums for other benefits, when you return from leave you ☐ will ☐ will not be expected to reimburse us for the payments made on your behalf.

6. You ☐ will ☐ will not be required to present a fitness-for-duty certificate prior to being restored to employment. If such certification is required but not received, your return to work may be delayed until the certification is provided.

7(a). You ☐ are ☐ are not a "key employee" as described in §825.218 of the FMLA regulations. If you are a "key employee," restoration to employment may be denied following FMLA leave on the grounds that such restoration will cause substantial and grievous economic injury to us.

(b). We ☐ have ☐ have not determined that restoring you to employment at the conclusion of FMLA leave will cause substantial and grievous economic harm to us. (*Explain (a) and/or (b) below. See §825.219 of the FMLA regulations.*)

8. While on leave, you ☐ will ☐ will not be required to furnish us with periodic reports every ___ *(indicate interval of periodic reports, as appropriate for the particular leave situation)* of your status and intent to return to work *(see §825.309 of the FMLA regulations).* If the circumstances of your leave change and you are able to return to work earlier than the date indicated on the reverse side of this form, you ☐ will ☐ will not be required to notify us at least two work days prior to the date you intend to report for work.

9. You ☐ will ☐ will not be required to furnish recertification relating to a serious health condition. (*Explain below, if necessary, including the interval between certifications as prescribed in §825.308 of the FMLA regulations.*)

Appendix E to Part 825—IRS Notice Discussing Relationship Between FMLA and COBRA

Internal Revenue Bulletin No. 1994-51 (December 19, 1994), pp. 10-11.

Part III. Administrative, Procedural, and Miscellaneous

Effect of the Family and Medical Leave Act on COBRA Continuation Coverage

Notice 94-103

The Family and Medical Leave Act of 1993 ("FMLA"), P.L. 103-3, imposes certain requirements on employers regarding coverage, including family coverage, under group health plans for employees taking FMLA leave. Many employers have raised questions about how the requirements under FMLA affect their obligation to provide COBRA continuation coverage in accordance with the requirements of section 4980B of the Internal Revenue Code. This notice addresses a number of the principal questions that have been raised.

The requirements pertaining to FMLA leave, including the employer's obligation to maintain coverage under a group health plan during FMLA leave, are established under FMLA, not under the Internal Revenue Code. The U.S. Department of Labor has published rules interpreting the requirements of FMLA in part 825 of title 29 of the Code of Federal Regulations. The determination of when FMLA leave ends is relevant to the guidance provided in this notice. Although this notice makes several references to the first day or the last day of FMLA leave, the notice does not purport to provide guidance on when FMLA leave begins or ends or on any other aspect of FMLA leave; instead, the notice provides guidance on the COBRA continuation coverage requirements that may arise once FMLA leave has ended (as determined under FMLA and the Labor Regulations thereunder). *See, e.g.*, 29 C.F.R. § 825.209(f) and (g).

Q-1: *In What Circumstances Does a COBRA Qualifying Event Occur If an Employee Does Not Return from FMLA Leave?*

A-1: The taking of leave under FMLA does not constitute a qualifying event under section 4980B of the Code. A qualifying event under section 4980B(f)(3)(B) occurs, however, if (1) an employee (or the spouse or a dependent child of the employee) is covered on the day before the first day of FMLA leave (or becomes covered during the FMLA leave) under a group health plan of the employee's employer, (2) the employee does not return to employment with the employer at the end of the FMLA leave, and (3) the employee (or the spouse or a dependent child of the employee) would, in the absence of COBRA continuation coverage, lose coverage under the group health plan (*i.e.*, cease to be covered under the same terms and conditions as in effect for similarly situated active employees and their spouses and dependent children) before the end of what would be the maximum coverage period. However, the satisfaction of the three conditions in the preceding sentence does not constitute a qualifying event if the employer eliminates, on or before the last day of the employee's FMLA leave, coverage under a group health plan for the class of employees (while continuing to employ that class of employees) to which the employee would have belonged if the employee had not taken FMLA leave.

Q-2: *When Does the COBRA Qualifying Event Occur, and How is the Maximum Coverage Period Measured?*

A qualifying event described in Q&A-1 occurs on the last day of FMLA leave. The maximum coverage period is measured from the date of the qualifying event (*i.e.*, the last day of FMLA leave). If, however, coverage under the group health plan is lost at a later date and the plan provides for the extension of the required periods, as permitted under section 4980B(f)(8) of the Code, then the maximum coverage period is measured from the date when coverage is lost.

Example 1: Employee *A* is covered under the group health plan of Employer *X* on January 31, 1995. *A* takes FMLA leave beginning February 1, 1995. *A*'s last day of FMLA leave is 12 weeks later, on April 25, 1995, and *A* does not return to work with *X* at the end of the FMLA leave. If *A* does not elect COBRA continuation coverage, *A* will lose coverage under the group health plan of *X* on April 26, 1995.

A experiences a qualifying event on April 25, 1995, and the maximum coverage period (generally 18 months) is measured from that date. (This is the case even if, for part or all of the FMLA leave, *A* fails to pay the employee portion of premiums for coverage under the group health plan of *X* and is not covered under *X*'s plan. *See* Q&A-3 below.)

Example 2: Employee *B* and *B*'s spouse are covered under the group health plan of Employer *Y* on August 15, 1995. *B* takes FMLA leave beginning August 16, 1995. *B* informs *Y* less than 7 weeks later, on September 28, 1995, that *B* will not be returning to work. Under the FMLA regulations published by the Department of Labor in part 825 of title 29 of the Code of Federal Regulations, *B*'s last day of FMLA leave is September 28, 1995. *B* does not return to work with *Y* at the end of the FMLA leave. If *B* and *B*'s spouse do not elect COBRA continuation coverage, they will lose coverage under the group health plan of *Y* on September 29, 1995.

B and B's spouse experience a qualifying event on September 28, 1995, and the maximum coverage period (generally 18 months) is measured from that date. (This is the case even if, for part or all of the FMLA leave, *B* fails to pay the employee portion of premiums for coverage under the group health plan of *Y* and *B* or *B*'s spouse is not covered under *Y*'s plan. *See* Q&A-3 below.)

Q-3: *Can a COBRA Qualifying Event Occur If an Employee Failed to Pay the Employee Portion of Premiums for Coverage Under a Group Health Plan During FMLA Leave or Declined Coverage Under a Group Health Plan During FMLA Leave?*

A-3: Yes. Any lapse of coverage under a group health plan during FMLA leave is irrelevant in determining whether a set of circumstances constitutes a qualifying event under Q&A-1 of this notice or when such a qualifying event occurs under Q&A-2.

Q-4: *Are the Foregoing Rules Affected by a Requirement of State or Local Law to Provide a Longer Period of Coverage Than That Required Under FMLA?*

A-4: No. Any State or local law that requires coverage under a group health plan to be maintained during a leave of absence for a period longer than that required under FMLA (for example, for 16 weeks of leave rather

than for the 12 weeks required under FMLA) is disregarded for purposes of determining when a qualifying event occurs under section 4980B of the Code.

Q-5: *May COBRA Continuation Coverage Be Conditioned Upon Reimbursement of the Premiums Paid by the Employer for Coverage Under a Group Health Plan During FMLA Leave?*

A-5: No. The U.S. Department of Labor has published rules describing the circumstances in which an employer may recover premiums it pays to maintain coverage, including family coverage, under a group health plan during FMLA leave from an employee who fails to return from leave. *See* 29 CFR § 825.213. Even if recovery of premiums is permitted under those rules, the right to COBRA continuation coverage cannot be conditioned upon the employee's reimbursement of the employer for premiums the employer paid to maintain coverage under a group health plan during FMLA leave.

Q-6: *How Is the COBRA Notice Period for Employers Satisfied?*

A-6: In the case of an employee (or the spouse or a dependent child of an employee) who experiences a qualifying event described in Q&A-1 of this notice, the usual notice rules of section 4980B(f)(6) of the Code apply. Thus, the employer must notify the plan administrator of the qualifying event within 30 days (or, in the case of a group health plan which is a multiemployer plan, such longer period of time as may be provided in the terms of the plan) of the last day of FMLA leave. If, however, coverage under the group health plan is lost after the last day of FMLA leave and the plan provides for the extension of the required periods, as permitted under section 4980B(f)(8), then the applicable notice period of section 4980B(f)(6)(B) commences on the date coverage is lost.

Q-7: *What is the Effect of This Notice?*

A-7: Before the effective date of final regulations under section 4980B of the Code, employers and group health plans must operate in good faith compliance with a reasonable interpretation of the statutory requirements for COBRA continuation coverage. Whether there has been good faith compliance with a reasonable interpretation will be determined based on all the facts and circumstances of each case; however, the Service will consider compliance with the terms of this notice to constitute good faith compliance with a reasonable interpretation of the COBRA continuation coverage requirements of section 4980B of the Code as they apply to FMLA leave situations, but only to the extent that this notice addresses the COBRA continuation coverage requirements in such situations.

DRAFTING INFORMATION

The principal author of this notice is Russ Weinheimer of the Office of the Associate Chief Counsel (Employee Benefits and Exempt Organizations). For further information regarding this notice, contact Mr. Weinheimer at (202) 622-4695 (not a toll-free number).

[FR Doc. 94-32342 Filed 12-30-94; 3:44 pm]
BILLING CODE 4510-27-P

federal register

Friday
January 6, 1995

Part III

Department of Defense

General Services Administration

National Aeronautics and Space Administration

48 CFR Ch. 1

Federal Acquisition Regulation; Truth in Negotiations Act and Related Changes; Proposed Rule

DEPARTMENT OF DEFENSE

GENERAL SERVICES ADMINISTRATION–

NATIONAL AERONAUTICS AND SPACE ADMINISTRATION–

48 CFR Chapter 1 –

[FAR Case 94–721]–

RIN 9000–AG30–

Federal Acquisition Regulation; Truth in –Negotiations Act and Related Changes

AGENCIES: Department of Defense (DOD), General Services Administration (GSA), and National Aeronautics and Space Administration (NASA).

ACTION: Proposed rule.

SUMMARY: This proposed rule is issued pursuant to the Federal Acquisition Streamlining Act of 1994 to implement those portions of Pub. L. 103–355 that make specific changes to the Truth in Negotiations Act (TINA) or that impact other areas of the FAR that affect contract pricing. This regulatory action was not subject to Office of Management and Budget review under Executive Order 12866, dated September 30, 1993.

DATES: *Comment Due Date:* Comments should be submitted on or before March 7, 1995 to be considered in the formulation of a final rule.

Public Meeting: A public meeting will be held on February 9, 1995, at 9:30 a.m.–

Oral/Written Statements: Views to be presented at the public meeting should be sent, in writing, to the FAR Secretariat, at the address given below, not later than February 6, 1995.

ADDRESSES: Interested parties should submit written comments to: –General Services Administration, FAR Secretariat (VRS),– 18th & F Streets, NW, Room 4037, Washington, DC 20405, Telephone: (202) 501–4755.

The public meeting will be held at:– General Services Administration Auditorium, 18th & F Streets, NW, First Floor, –Washington, DC 20405.

Please cite FAR case 94–721 in all correspondence related to this case. –

FOR FURTHER INFORMATION CONTACT: Mr. Al Winston, Truth in Negotiations Act (TINA) Team Leader, at (703) 602–2119 in reference to this FAR case. For general information, contact the FAR Secretariat, Room 4037, GSA Building, Washington, DC 20405 (202) 501–4755. Please cite FAR case 94–721.

SUPPLEMENTARY INFORMATION:

A. Background –

The Federal Acquisition Streamlining Act of 1994 (Pub. L. 103–355) (the Act) provides authorities that streamline the acquisition process and minimize burdensome government-unique requirements. Major changes that can be expected in the acquisition process as a result of the Act's implementation include changes in the areas of Commercial Item Acquisition, Simplified Acquisition Procedures, the Truth in Negotiations Act, and introduction of the Federal Acquisition Computer Network (FACNET).

Public Meeting–

The FAR Council is interested in an exchange of ideas and opinions with respect to the regulatory implementation of the Act. For that reason, the FAR Council is conducting a series of public meetings. The public is encouraged to furnish its views; the FAR Council anticipates that public comments will be very helpful in formulating final rules. –

A public meeting will be held on February 9, 1995, to enable the public to present its views on this rule. This rule will only be discussed at the public meeting session. Any subsequent public meetings will be devoted to other revisions to the FAR.–

Persons or organizations wishing to make presentations will be allowed 10 minutes each to present their views, provided they notify the FAR Secretariat at (202) 501–4755. Written statements for presentation should be submitted to the FAR Secretariat by February 6, 1995. Persons or organizations with similar positions are encouraged to select a common spokesperson for presentation of their views. This meeting, in conjunction with the **Federal Register** notice soliciting public comments on the rule, will be the only opportunity for the public to present its views.

FAR case 94–721

FAR case 94–721 implements Sections 1201 through 1210 and Sections 1251 and 1252 of the Act. Highlights include making TINA requirements for civilian agencies substantially the same as those for the Department of Defense (increasing the threshold for submission of ''cost or pricing data'' to $500,000 and adding penalties for defective pricing). Provisions are also included that increase the threshold for cost or pricing data submission every 5 years beginning October 1, 1995. New exceptions are added to the requirement for the submission of ''cost or pricing data'' for commercial items; approval levels for waivers are changed, and prohibitions are placed on acquiring ''cost or pricing data'' when an exception applies. The coverage includes a clear explanation of adequate price competition as required by the Act.

Also, FAR coverage has been included that addresses: (1) ''Information other than cost or pricing data'', (2) exemptions based on established catalog or market price, (3) inter-divisional transfers of commercial items at price, and (4) price competition when only one offer has been received.

The FAR language primarily modifies FAR Part 15, together with associated Part 52 clauses and Part 53 forms. However, some coverage is proposed to address contract clauses where threshold changes are made in Part 14 pertaining to sealed bid contracting, and in Part 31 where the cost principle on material costs has been amended to address inter-divisional transfers of commercial items at price. Additional miscellaneous changes in Parts 4, 12, 15, 16, 31, 33, 36, 45, 46, 49, and 53 have also been included.

Upon final implementation, the proposed FAR coverage will supersede the earlier FAR case 94–720 that was previously published as an interim rule in Federal Acquisition Circular (FAC) 90–22. FAR case 94–720 provided for an immediate increase to the threshold for ''cost or pricing data'' submission by contractors to civilian agencies to $500,000. The Act provided that this requirement was effective on October 13, 1994, the date of enactment. FAC 90–22 (FAR case 94–720) also removed the certification requirement of commercial pricing for parts or components for contractors doing business with civilian agencies.

Policy for Determining Reasonableness of Price–

Two major changes are found in the proposed coverage. The first change shifts the policy of FAR Part 15 with respect to determining price reasonableness. A hierarchical policy preference for the types of information to be used in assessing reasonableness of price is established. The policy states that no additional information should be obtained from the contractor if there is adequate price competition. This is followed by allowing progressively more intrusive types of data requirements. Obtaining ''cost or pricing data'' is designated as the last choice. Use of ''cost or pricing data'' is coupled with a reminder that unnecessarily requiring that type of data is not desirable and can lead to additional

costs to both the government and the contractor.–

New FAR coverage, based on the Act, is presented that expands the exceptions based on adequate price competition and provides for special exceptions for commercial items. A new section addressing ''information other than cost or pricing data'' is created and a Standard Form 141X is provided for use by contractors. –

The proposed policy at FAR 15.804–1(b)(1)(ii), which recognizes circumstances when it can be determined that adequate price competition exists even though only one offeror has responded to the Government's requirement, is under review within the executive branch of the Government to insure the policy is a permissible implementation of the Act.

Defining ''Cost or Pricing Data''

The second major change accomplished by the proposed coverage is the clarification of the meaning of the term ''cost or pricing data.'' Currently, the FAR uses the term inconsistently. In some places, ''certified cost or pricing data'' is used and in other locations, it states ''cost or pricing data.'' In the proposed coverage, the term has been clarified in the definition to mean that, among other things, ''cost or pricing data'' is required to be certified in accordance with TINA and FAR 15.804–4, and means all facts that as of the date of agreement on price (or other mutually agreeable date) prudent buyers and sellers would reasonably expect to affect the price significantly.

To avoid possible confusion, the term ''certified cost or pricing data'' has also been defined as a subset of the more encompassing term ''cost or pricing data.'' The latter addition is designed to show that ''certified cost or pricing data'' is a subset of ''cost or pricing data'' and serves to distinguish between data for which a certificate has not yet been submitted and data for which a certificate has or should have been submitted. If circumstances change such that certification is not required, ''cost or pricing data'' reverts to ''information other than cost or pricing data'' and has the same postaward audit value that any other ''information other than cost or pricing data'' would have. However, ''cost or pricing data'' is always distinguishable from ''information other than cost or pricing data'' *before award* by its intended use. That is, ''cost or pricing data'' should not be requested unless the contracting officer believes it will be necessary to rely upon it to price the contract and that certification will be required or should have been required in accordance with FAR 15.804–4. Only in the very limited circumstance where ''cost or pricing data'' is submitted but an exception is later found to apply would it revert to and become ''information other than cost or pricing data'' after award of the contract. Thus, the word ''certified'' need no longer be placed in front of ''cost or pricing data'' in every location it is used in the FAR in order for the term to have the full meaning provided for in TINA. Furthermore, now that the intent of the use of the data is clear, a bright-line distinction between ''cost or pricing data'' and all other types of information has been created.

''Information Other Than Cost or Pricing Data''–

Since a bright-line test for ''cost or pricing data'' has now been established, it is also possible to craft a second category of data—''information other than cost or pricing data''—that may be required by the contracting officer in order to establish cost realism or price reasonableness. This information can include limited cost information, sales data or pricing information. The intent is also clear with respect to this category of information. Because it is not ''cost or pricing data,'' certification shall not be required and approval to obtain this information is vested in the contracting officer. The proposed FAR coverage gives a detailed discussion of ''information other than cost or pricing data'' at 15.804–5.

B. Regulatory Flexibility Act–

This proposed rule is not expected to have a significant economic impact on a substantial number of small entities within the meaning of the Regulatory Flexibility Act, 5 U.S.C. 601, *et seq.*, because the proposed FAR revisions reduce the instances where it is necessary to request ''cost or pricing data'' from contractors. However, most contracts awarded to small entities are awarded on a competitive, fixed-price basis and do not require the submission of ''cost or pricing data''. An Initial Regulatory Flexibility Analysis has, therefore, not been performed. Comments from small entities concerning the affected FAR subpart will be considered in accordance with 5 U.S.C. 610. Such comments must be submitted separately and should cite 5 U.S.C. 601, *et seq.* (FAR case 94–721), in correspondence.

C. Paperwork Reduction Act–

The Paperwork Reduction Act, Pub. L. 96–511, is deemed to apply because the proposed rule contains information collection requirements. Accordingly, a request for approval of a new information collection requirement concerning TINA changes is being submitted to the Office of Management and Budget under 44 U.S.C. 3501, *et seq.* Public comments concerning this request will be invited through a **Federal Register** notice appearing in a future issue.

List of Subjects in 48 CFR Parts 4, 12, 14, 15, 16, 31, 33, 36, 45, 46, 49, 52, and 53

Government procurement.

Dated: December 27, 1994.

Edward Loeb,

Deputy Project Manager for the Implementation of the Federal Acquisition Streamlining Act of 1994.

Therefore, it is proposed that 48 CFR Chapter 1 be amended as set forth below:

1. The authority citation for 48 CFR Chapter 1 continues to read as follows:

Authority: 40 U.S.C. 486(c); 10 U.S.C. chapter 137; and 42 U.S.C. 2473(c).

PART 1—FEDERAL ACQUISITION REGULATIONS SYSTEM–

2. Section 1.105 is amended under the ''FAR Segment'' and ''OMB Control Number'' headings by removing ''52.215–32'' and ''9000–0105'', and adding entries, in numerical order, to read as follows:

1.105 OMB Approval under the Paperwork Reduction Act.

* * * * *

FAR segment	OMB control No.
* * * * *	
52.215–41–	9000–XXX
52.215–42–	9000–XXX
* * * * *	

PART 4—ADMINISTRATIVE MATTERS

3. Section 4.803 is amended in paragraph (a)(17) by adding before the period at the end of the sentence '', or information other than cost or pricing data'', and paragraph (b)(4) is revised to read as follows:

4.803 Contents of contract files.

* * * * *–

(b) * * *

(4) Cost or pricing data, Certificates of Current Cost or Pricing Data, or information other than cost or pricing data; cost or price analysis; and other documentation supporting contractual

actions executed by the contract administration office.

* * * * *

PART 12—CONTRACT DELIVERY OR PERFORMANCE

12.504 [Amended]

4. Section 12.504(d) is amended by adding ''or other information'' before the period at the end of the sentence.

PART 14—SEALED BIDDING–

5. Section 14.201–7 is amended in paragraphs (b)(1) and (c)(1) by removing ''$100,000, or for the Department of Defense, the National Aeronautics and Space Administration, and the Coast Guard, is expected to exceed $500,000.'' and inserting ''the threshold for submission of cost or pricing data at 15.804–2(a)(1).'' in its place; by redesignating (d) as (e), and adding a new (d) to read as follows:

14.201–7 Contract clauses.

* * * * *_

(d) Contracting officers shall, if requested by the prime contractor, modify contracts to change the threshold in the contract to the threshold for submission of cost or pricing data at 15.804–2(a)(1), without requiring consideration. The contract modification shall be accomplished by inserting into the contract the current version of clauses 52.214–27, Price Reduction for Defective Cost or Pricing Data—Modifications—Sealed Bidding, and 52.214–28, Subcontractor Cost or Pricing Data—Modifications—Sealed Bidding. These new contract clauses shall apply only to contract modifications and subcontracts for which agreement on price occurs after the contracting officer has inserted the new clauses.

* * * * *

14.214 [Removed]–

6. Section 14.214 is removed.

PART 15—CONTRACTING BY NEGOTIATION

7. Section 15.106–2 is revised to read as follows:

15.106–2 Audit—commercial items.

(a) This subsection implements 10 U.S.C. 2306a(d)(2) and (3) and 41 U.S.C. 254b(d)(2) and (3).

(b) The contracting officer shall, when contracting by negotiation, insert clause 52.215–XX, Audit-Commercial Items, in solicitations and contracts when submission of cost or pricing data may be required under 15.804–2 or exempted under 15.804–1(a)(2).

15.406–5 [Amended]–

8. Section 15.406–5(b) is amended by inserting the parenthetical ''(See 15.804–6 and 15.804–8.)'' at the end.–

9. Section 15.703(a)(2) is revised to read as follows:

15.703 Acquisitions requiring make-or-buy programs.–

(a) * * * _

(2) Qualifies for an exception from the requirement to submit cost or pricing data under 15.804–1; or

* * * * *_

10. Section 15.801 is amended by revising the definition of ''Cost or pricing data'', and adding definitions in alphabetical order to read as follows:

15.801 Definitions.

Certified cost or pricing data is a subset of the term ''cost or pricing data''. The term ''cost or pricing data'' includes the requirement for certification. The term ''certified cost or pricing data'' may be used to specifically indicate ''cost or pricing data'' for which a certificate has been, or should have been, provided in accordance with 15.804–4.

* * * * *_

Cost or pricing data means all facts that, as of the date of price agreement or, if applicable, another date agreed upon between the parties that is as close as possible to the date of agreement on price, prudent buyers and sellers would reasonably expect to affect the price significantly. Cost or pricing data shall be certified in accordance with 15.804–4. Cost and pricing data are factual, not judgmental, and are therefore verifiable. While they do not indicate the accuracy of the prospective contractor's judgment about estimated future costs or projections, they do include the data forming the basis for that judgment. Cost or pricing data are more than historical accounting data; they are all the facts that can be reasonably expected to contribute to the soundness of estimates of future costs and to the validity of determinations of costs already incurred. They also include such factors as (a) vendor quotations; (b) nonrecurring costs; (c) information on changes in production methods and in production or purchasing volume; (d) data supporting projections of business prospects and objectives and related operations costs; (e) unit-cost trends such as those associated with labor efficiency; (f) make-or-buy decisions; (g) estimated resources to attain business goals; and (h) information on management decisions that could have a significant bearing on costs.

* * * * *_

Information other than cost or pricing data means any type of information that is not required to be certified in accordance with 15.804–4, that is necessary to determine price reasonableness or cost realism. For example, such information may include pricing information, sales information, or partial cost information, and includes cost or pricing data for which certification is determined inapplicable after submission.

* * * * *

Subcontract, for purposes of this subpart, includes a transfer of commercial items between divisions, subsidiaries, or affiliates of a contractor or a subcontractor.

* * * * *_

11. Section 15.802 is revised to read as follows:

15.802 Policy.–

Contracting officers shall——

(a) Purchase supplies and services from responsible sources at fair and reasonable prices. In establishing the reasonableness of the offered prices, the contracting officer shall not obtain more information than is necessary and shall generally use the following order of preference in determining the type of information required:–

(1) No further information from the offeror if the price is based on adequate price competition.

(2) Information other than cost or pricing data:

(i) Information related to prices (e.g., established catalog or market prices), relying first on information available within the Government, second on information obtained from sources other than the offeror and lastly on information obtained from the offeror.

(ii) Limited cost information, which does not meet the definition of cost or pricing data at 15.801.

(3) *Cost or pricing data.* The contracting officer should use every means available to ascertain a fair and reasonable price prior to requesting cost or pricing data. Contracting officers shall not unnecessarily require the submission of cost or pricing data because it leads to increased proposal preparation costs, generally extends acquisition lead-time, and wastes both contractor and Government resources.

(b) Price each contract separately and independently and not—

(1) Use proposed price reductions under other contracts as an evaluation factor, or

(2) Consider losses or profits realized or anticipated under other contracts.

(c) Not include in a contract price any amount for a specified contingency to the extent that the contract provides for a price adjustment based upon the occurrence of that contingency.

15.803 [Amended]

12. Section 15.803(a) is amended in the last sentence by inserting ''or other information'' after ''pricing data''.

15.804 Cost or pricing data and other information.

13. Section 15.804, heading, is revised to read as set forth above.–

14. Section 15.804–1 is revised to read as follows:

15.804–1 Prohibition on obtaining cost or pricing data.

(a) *Exceptions to cost or pricing data requirements.* The contracting officer shall not, pursuant to 10 U.S.C. 2306a and 41 U.S.C. 254b, require submission of cost or pricing data (but may require other information to support a determination of price reasonableness or cost realism)—

(1) If the contracting officer determines that prices agreed upon are based on—

(i) Adequate price competition (see paragraph (b)(1) of this section);––

(ii) Established catalog or market prices of commercial items (see section 2.101) sold in substantial quantities to the general public (see paragraph (b)(2) of this section); or–

(iii) Prices set by law or regulation (see paragraph (b)(3) of this section).

(2) For acquisition of a commercial item if an exception under paragraph (a)(1) of this section does not apply, but the contracting officer can determine the price is fair and reasonable (see paragraph (b)(4)(i) of this section and 15.804–5(b));

(3) For modifications to contracts/subcontracts for commercial items, if the basic contract/subcontract was awarded without the submission of cost or pricing data because the action was exempt from cost or pricing data requirements of 15.804–2 and the modification does not change the contract/subcontract to a contract/subcontract for the acquisition of other than a commercial item (see paragraph (b)(4)(ii) of this section); or

(4) For exceptional cases (see paragraph (b)(5) of this section).

(b) *Standards for exceptions from cost or pricing data requirements.*

(1) *Adequate price competition.* A price is based on adequate price competition if—

(i) Two or more responsible offerors, competing independently, submit priced offers responsive to the Government's expressed requirement and if—

(A) Award will be made to a responsible offeror whose proposal offers either—

(*1*) The greatest value (see 15.605(c)) to the Government and price is a substantial factor in source selection; or

(*2*) The lowest evaluated price; and

(B) There is no finding, supported by a statement of the facts and approved at a level above the contracting officer, that the price of the otherwise successful offeror is unreasonable.

(ii) There was a reasonable expectation, based on market analysis or other assessment, that two or more responsible offerors, competing independently, would submit priced offers responsive to the solicitation's expressed requirement, even though only one offer is received from a responsible, responsive offeror and if—

(A) Based on the offer received, the contracting officer can reasonably conclude that the offer was submitted with the expectation of competition, e.g.,—

(*1*) The offeror believed that at least one other offeror was capable of submitting a meaningful, responsive offer.

(*2*) The offeror had no reason to believe that other potential offerors did not intend to submit an offer; and

(B) The determination is approved at a level above the contracting officer that the proposed price is based on adequate price competition and is reasonable; or

(iii) Price analysis clearly demonstrates that the proposed price is reasonable in comparison with current or recent prices for the same or similar items purchased in comparable quantities, under comparable terms and conditions under contracts that resulted from adequate price competition.

(2) *Established catalog or market prices*—(i) *Established catalog price.* Established catalog prices are prices (including discount prices) recorded in a catalog, price list, schedule or other verifiable and established record that (A) are regularly maintained by the manufacturer or vendor; (B) are published or otherwise available for customer inspection, and (C) state current or last sales price. An item will automatically qualify for this exception if sold in substantial quantities, and sales at established catalog prices made to the general public are at least one-fourth of total sales of the item. If an item does not meet these criteria, an exception may also apply under paragraph (b)(2)(vi) of this section.

(ii) *Established market price.* An established market price is a price that is established in the course of ordinary and usual trade between buyers and sellers free to bargain and that can be substantiated by data from sources independent of the offeror.

(iii) *Based on.* A price may also be based on an established catalog or market price if the item being purchased is not itself a catalog or market priced commercial item but is sufficiently similar to the catalog or market priced commercial item to ensure that any difference in prices can be identified and justified without resorting to cost analysis. If a price is based on estimated future sales and prices, then provision should be made for future price adjustment, if actual sales and prices differ significantly from the estimated sales and prices upon which the contract price was based.

(iv) *Sold in substantial quantities.* An item is sold in substantial quantities if there are sales of more than a nominal quantity based on the norm of the industry segment. For services to be sold in substantial quantities, they must also be customarily provided by the offeror, using personnel regularly employed and equipment (if any is necessary) regularly maintained principally to provide the services.

(A) The method used to establish sales for catalog priced items may be sales order, contract, shipment, invoice, actual recorded sales or other records, so long as the method used is consistent and provides an accurate indication of sales activity. If the item would not otherwise qualify for an exception, sales of the item by affiliates (see 19.101 for definition) of the offeror may be considered in addition to sales of the item by the offeror if—

(*1*) The offeror provides and separately identifies all data required to be submitted that are related to the sales by the affiliate (e.g., information required by the Standard Form (SF) 1412);

(*2*) The affiliate agrees in writing to provide the same preaward and post-award access to records as is provided by the offeror; and

(*3*) All sales of the item by the affiliate are considered, not just catalog sales.

(B) An exception may apply for an item based on the market price of the item regardless of the quantity of sales of the item previously made by the offeror or the types of customers for these sales.

(v) The general public consists of buyers other than the U.S. Government or its instrumentalities, e.g., U.S. Government corporations. The general public does not include (A) affiliates of the offerors, (B) buyers of items for U.S. Government end use, or (C) purchases by the U.S. Government on behalf of foreign governments, such as for Foreign Military Sales.

(vi) *Discretionary criteria.* Even though the criteria of paragraphs

(b)(2)(i) and (ii) of this section are not met, the contracting officer may use other criteria to determine that the price of the item is based on an established catalog or market price of a commercial item sold in substantial quantities to the general public. For example—

(A) The item recently qualified for an exemption but no longer qualifies due to an unusual level of sales to the Government; or

(B) The item is a commercial item no longer sold to the public, but is still required by the Government and the proposed price can be determined reasonable based upon consideration of differences in quantities, terms, conditions, or other appropriate factors in comparison to the last price for which an exemption was granted.

(3) *Prices set by law or regulation.* Pronouncements in the form of periodic rulings, reviews, or similar actions of a governmental body, or embodied in the laws are sufficient to set a price.

(4) *Commercial items.* (i) For acquisitions of commercial items, if the exceptions at 15.804–1(a)(1) do not apply, the contracting officer shall obtain information from the prospective contractor or other sources regarding prices at which the same or similar items have been sold in the commercial marketplace in order to determine whether the price is fair and reasonable. Cost or pricing data may be obtained for such a commercial item only if the contracting officer makes a written determination that such information is inadequate for performing a price analysis and determining price reasonableness.

(ii) For modifications of commercial items, the exception at 15.804–1(a)(3) applies if the modification of a commercial item does not change the item from a commercial item to a noncommercial item. However, if the modification changes the nature of the work under the contract/subcontract either by a change to the commercial item or by the addition of other noncommercial work, the contracting officer is not prohibited from obtaining cost or pricing data for the added work.

(5) *Exceptional cases.* The head of the contracting activity may, in exceptional cases and without power of delegation, waive the requirement for submission of cost or pricing data. For example, a waiver should be considered if another exemption does not apply but the price can be determined to be fair and reasonable. The authorization for the waiver and the reasons for granting it shall be in writing. If the head of the contracting activity has waived the requirement for submission of cost or pricing data, the contractor or higher-tier subcontractor to whom the waiver relates shall be considered as having been required to make available cost or pricing data for purposes of 15.804–2(a)(1). Consequently, award of any lower-tier subcontract expected to exceed the pertinent threshold set forth at 15.804–2(a)(1) requires the submission of cost or pricing data unless 15.804–1 otherwise applies to the subcontract.

(c) *Qualifying for an exception.* (1) In order to qualify for an exception based on established catalog or market price or prices set by law or regulation, the offeror must request an exemption. The contracting officer may specify one of the following methods:

(i) *Customary method*—SF 1412, Request for Exemption from Cost or Pricing Data.

(A) It is not necessary to establish an exemption for each line item. Consequently, a SF 1412 may be appropriate only for major items, i.e., if the proposed price for the total quantity of an item exceeds $100,000 or another threshold specified by the contracting officer.

(B) If none of the items has a proposed price for its total quantity in excess of $100,000 or another threshold specified by the contracting officer, a SF 1412 should be obtained for the item with the highest total proposed price.

(C) The contracting officer shall ensure that information used to support price negotiations is sufficiently current to permit negotiation of a fair and reasonable price. Requests for updated offeror information should be limited to information that affects the adequacy of the proposal for negotiations, such as changes in price lists.

(ii) *Prior exemption.* (A) If the U.S. Government has acted favorably on an exemption request for the same or similar items, the contracting officer may consider the prior submissions as support for the current exemption request. Relief from the submission of new information does not relieve the contracting officer from the requirement to determine reasonableness of price on the current acquisition.

(B) When acquiring by separate contract an item included on an active Federal Supply Service or Information Resource Management Service Multiple Award Schedule contract, the contracting officer should grant an exemption and not require a SF 1412 or similar exemption documentation if the offeror has provided as proof of the prior exemption a copy of the Certificate of Established Catalog or Market Price that was provided to GSA. Price analysis shall be performed in accordance with 15.805–2 to determine reasonableness of price.

(iii) *Repetitive acquisitions.* The contracting officer and offeror may make special arrangements for the submission of exemption requests for repetitive acquisitions of catalog items or market items. These arrangements can take any form as long as they set forth an effective period and the exemption criteria at 15.804–1(b) (2) or (3) are satisfied. Such arrangements may be extended to other Government offices with their concurrence.

(iv) *Other.* The contracting officer may request or agree to accept information other than that specified in paragraphs (c)(1)(i) through (iii) of this section.

(2) If the offeror/contractor does not qualify for an exception under paragraph (c)(1) of this section, an exemption may nevertheless be requested as a commercial item (see paragraph (b)(4) of this section) or as an exceptional case (see paragraph (b)(5) of this section). The contracting officer shall request sufficient documentation to support the request.

15. Section 15.804–2 is revised to read as follows:

15.804–2 Requiring Cost or Pricing Data

(a)(1) Cost or pricing data shall be obtained only if the contracting officer concludes that none of the exceptions in 15.804–1 applies. However, if the contracting officer has sufficient information available to determine price reasonableness, then a waiver in accordance with 15.804–1(b)(5) should be considered. The threshold for obtaining cost or pricing data is $500,000. This amount will be subject to adjustment, effective October 1, 1995, and every five years thereafter. Except as provided in 15.804–1, cost or pricing data are required before accomplishing any of the following actions expected to exceed the threshold in effect at time of agreement on price or, in the case of existing contracts, the threshold specified in the contract—

(i) The award of any negotiated contract (except for undefinitized actions such as letter contracts).

(ii) The award of a subcontract at any tier, if the contractor and each higher-tier subcontractor have been required to furnish cost or pricing data. (See 15.804–1(b)(5).)

(iii) The modification of any sealed bid or negotiated contract (whether or not cost or pricing data were initially required) or subcontract covered by paragraph (a)(1)(ii) of this section. Price adjustment amounts shall consider both increases and decreases. (For example, a $150,000 modification resulting from a

reduction of $350,000 and an increase of $200,000 is a pricing adjustment exceeding $500,000.) This requirement does not apply when unrelated and separately priced changes for which cost or pricing data would not otherwise be required are included for administrative convenience in the same modification.

(2) Contracting officers shall, if requested by the prime contractor, modify contracts to change the threshold in the contract to the cost or pricing data threshold in paragraph (a)(1) of this section, without requiring consideration. The contract modification shall be accomplished by inserting into the contract the current version of the clauses 52.215–23, Price Reduction for Defective Cost or Pricing Data—Modifications, and 52.215–25, Subcontractor Cost or Pricing Data—Modifications, or 52.215–24, Subcontractor Cost or Pricing Data, as applicable. These new contract clauses shall apply only to contract modifications and subcontracts for which agreement on price occurs after the contracting officer has inserted the new clauses.

(3) Unless prohibited by 15.804–1(a)(1), the head of the contracting activity, without power of delegation, may authorize the contracting officer to obtain cost or pricing data for pricing actions below the pertinent threshold in paragraph (a)(1) of this section provided the action exceeds the simplified acquisition threshold. The head of the contracting activity shall justify the requirement for cost or pricing data. The documentation shall include a written finding that cost or pricing data are necessary to determine whether the price is fair and reasonable and the facts supporting that finding.

(b) When cost or pricing data are required, the contracting officer shall require the contractor or prospective contractor to submit to the contracting officer (and to have any subcontractor or prospective subcontractor submit to the prime contractor or appropriate subcontractor tier) the following in support of any proposal:

(1) The cost or pricing data.

(2) A certificate of current cost or pricing data, in the format specified in 15.804–4, certifying that to the best of its knowledge and belief, the cost or pricing data were accurate, complete, and current as of the date of final agreement on price or, if applicable, another date agreed upon between the parties.

(c) If cost or pricing data are requested and submitted by an offeror, but an exception is later found to apply under 15.804–1, the data shall not be considered cost or pricing data as defined in 15.801 and shall not be certified in accordance with 15.804–4.

(d) The requirements of this section also apply to contracts entered into by the head of an agency on behalf of a foreign government.

15.804–3 [Reserved]

16. Section 15.804–3 is removed and reserved.

17. Section 15.804–4 is amended by revising paragraph (a), the double asterisk footnote to the certification statement following paragraph (a), and paragraph (e) to read as follows:

15.804–4 Certificate of Current Cost or Pricing Data

(a) When cost or pricing data are required under 15.804–2, the contracting officer shall require the contractor to execute a Certificate of Current Cost or Pricing Data, shown following this paragraph (a), and shall include the executed certificate in the contract file. The certificate states that the cost or pricing data are accurate, complete, and current as of the date the contractor and the Government agreed on a price or, if applicable, another date agreed upon between the parties.

Certificate of Current Cost or Pricing Data

* * * * *

* * * Insert the day, month, and year when price negotiations were concluded and price agreement was reached or, if applicable, another date agreed upon between the parties.

* * * * *

(e) If cost or pricing data are requested and submitted by an offeror, but an exception is later found to apply under 15.804–1, the data shall not be considered cost or pricing data and shall not be certified in accordance with this section.

* * * * *

18. Section 15.804–5 is added to read as follows:

15.804–5 Requiring Information Other Than Cost or Pricing Data

(a)(1) If cost or pricing data are not required because an exception under 15.804–1 other than paragraph (a)(2) of this section applies, or an action is at or below the threshold set forth at 15.804–2(a)(1), the contracting officer shall make a price analysis to determine the reasonableness of the price and any need for further negotiation.

(2) The contracting officer may require submission of information other than cost or pricing data only to the extent necessary to determine reasonableness of the price or cost realism. Such data shall not be certified in accordance with 15.804–4.

(3) If cost or pricing data are not requested in the solicitation because the contracting officer has a reasonable expectation that adequate price competition as discussed at 15.804–1(b)(1) will result, the contracting officer may request information to determine the cost realism of competing offers or to evaluate competing approaches. The contractor's format for submitting such information shall be used unless the contracting officer determines that use of a specific format is essential.

(4) When acquiring commercial items, if the action is based on adequate price competition, generally no additional information is necessary to determine the reasonableness of price. However, if it is determined that additional information is necessary to determine the reasonableness of the price, the contracting officer shall, to the maximum extent practicable, obtain the additional information from sources other than the offeror.

(5) When cost or pricing data are not required because an action is at or below the threshold set forth at 15.804–2(a)(1), information requested under paragraph (a)(2) of this section shall include, as a minimum, appropriate information on the prices and quantities at which the same or similar items have previously been sold, that is adequate for evaluating the reasonableness of the proposed price. Partial or limited cost information may also be required. For example, cost information might be necessary to support an analysis of material costs, but not for labor and overhead costs.

(6) When acquiring commercial items, unless adequate information is available from government sources, it may be necessary to obtain from the prospective contractor information such as that regarding—

(i) The supplier's marketing system (e.g., use of jobbers, brokers, sales agencies, or distributors);

(ii) The services normally provided commercial purchasers (e.g., engineering, financing, advertising or promotion);

(iii) Normal quantity per order;

(iv) Annual volume of sales to largest customers;

(v) Adjustments such as rebates, credits, or trade-ins available commercially but not available or used by the Government;

(vi) Additional sales inducements such as training or extended warranty periods provided to some customers if not provided to the Government; or

(vii) Prices charged by the primary source of an item offered by a reseller.

(b)(1) When acquiring commercial items for which an exception under 15.804–1(a)(2) may apply, the contracting officer shall seek to obtain from the offeror or contractor information on prices at which the same or similar items have been sold in the commercial market, that is adequate for evaluating, through price analysis, the reasonableness of the price of the action.

(2) If such information is not available from the offeror or contractor, the contracting officer shall seek to obtain such information from another source or sources.

(3) Requests for sales data relating to commercial items shall be limited to data for the same or similar items during a relevant time period.

(4) In requesting information from an offeror under this paragraph (b), the contracting officer shall, to the maximum extent practicable, limit the scope of the request to include only information that is in the form regularly maintained by the offeror in commercial operations. The SF 1412 shall not be used for this purpose.

(5) Any information obtained pursuant to this paragraph (b) that is exempt from disclosure under the Freedom of Information Act (5 U.S.C. 552(b)) shall not be disclosed by the Government.

(c) If, after receipt of offers, the contracting officer concludes there is insufficient information available to determine price reasonableness and none of the exceptions under 15.804–1 applies, then cost or pricing data shall be obtained, unless a waiver is granted (see 15.804–1(b)(5)).

19. Section 15.804–6 is amended by revising the heading and paragraphs (a) and (b) and amending Table 15–2 by:

(a) Revising the heading;

(b) Adding introductory text;

(c) Revising the first paragraph of item 1 and revising the ''Established Catalog'' subparagraph;––

(d) Revising item 4;

(e) Amending in Table B of item 8 by revising the ''under column (2)'' instructions under the table and;

Adding Table 15–3 above paragraph (c) and revising the first sentence of paragraph (d).

The revised and added text reads as follows:

15.804–6 Submission of Cost or Pricing Data or Other Information–

(a) Taking into consideration the policy at 15.802, the contracting officer shall specify in the solicitation (see 52.215–40 and 52.215–41)–––

(1) Whether cost or pricing data are required;––

(2) That, in lieu of submitting cost or pricing data, the offeror may submit a request for exemption from the requirement to submit cost or pricing data, as specified by the contracting officer in accordance with 15.804–1(c);––

(3) Other information required, if cost or pricing data are not necessary;––

(4) The format (see paragraph (b) of this section) in which the cost or pricing data or other information shall be submitted; and––

(5) Necessary preaward or postaward access to offeror's records if not provided by use of Standard Form (SF) 1411, Contract Pricing Proposal Cover Sheet (Cost or Pricing Data Required), Standard Form (SF) 1412, Request for Exemption from Submission of Cost or Pricing Data, or Standard Form (SF) 141X, Proposal Cover Sheet (Cost or Pricing Data Not Required); or a standard clause such as 52.214–26, Audit and Records Sealed—Bidding, 52.215–1, Audit and Records—Negotiation, or 52.215–XX, Audit—Commercial Items.–

(b)(1) Cost or pricing data shall be submitted on a SF 1411 unless required to be submitted on one of the termination forms specified in 48 CFR part 49, subpart 49.6. The SF 1411 shall not be used to submit any information other than cost or pricing data. Contract pricing proposals submitted on SF 1411 with supporting attachments shall be prepared in accordance with Table 15–2. Data supporting forward pricing rate agreements or final indirect cost proposals shall be submitted in a format acceptable to the contracting officer.––

(2) If information other than cost or pricing data is required to support price reasonableness or cost realism, the contracting officer may require such information to be submitted using a SF 141X. The information is not considered cost or pricing data in accordance with 15.804–2, and shall not be certified in accordance with 15.804–4. Information submitted on a SF 141X shall be prepared following the instructions provided in Table 15–3.

Table 15–2 Instructions for Submission of a Contract Pricing Proposal When Cost or Pricing Data are Required

The SF 1411 provides a cover sheet for use by offerors to submit to the Government a pricing proposal of estimated and/or actual costs only when cost or pricing data are required.

1. The pricing proposal shall be segregated by contract line item with sufficient detail to permit cost analysis. Attach cost-element breakdowns, using the applicable formats prescribed in item 8A, B, or C of this section for each proposed line item. These breakdowns must conform to the instructions in the solicitation and any specific requirements established by the contracting officer. Furnish supporting breakdowns for each cost element, consistent with offeror's cost accounting system.

* * * * *

Established Catalog or Market Prices/Prices Set by Law or Regulation/Commercial Item Not Covered By Another Exception—When an exemption from the requirement to submit cost or pricing data is requested, whether the item was produced by others or by the offeror, provide justification for the exemption as required by 15.804–1(c).

* * * * *

4. There is a clear distinction between submitting cost or pricing data and merely making available books, records, and other documents without identification. The requirement for submission of cost or pricing data is met when all accurate cost or pricing data reasonably available to the offeror have been submitted, either actually or by specific identification, to the contracting officer or an authorized representative. As later information comes into the offeror's possession, it should be promptly submitted to the contracting officer in a manner that clearly shows how the information impacts the offeror's price proposal. The requirement for submission of cost or pricing data continues up to the time of final agreement on price, or another date agreed upon between the parties if applicable.

* * * * *

8. Headings for Submission of Line-Item Summaries

* * * * *

B. Change Orders, Modifications, and Claims.

* * * * *

Under Column (2)—Include (i) the current estimates of the cost to complete the deleted work not yet performed (not the original proposal estimates), and (ii) the cost of deleted work already performed.

* * * * *

Table 15–3 Instruction for Submission of Information Other Than Cost or Pricing Data

SF 141X is a cover sheet for use by offerors to submit information to the Government when cost or pricing data are not required but the contracting officer has requested information to help establish price reasonableness or cost realism. Such information is not considered cost or pricing data, and shall not be certified in accordance with 15.804–4. Requests for information should be tailored so that only necessary data are requested.

1. The information submitted shall be at the level of detail described in the solicitation or specified by the contracting officer. The offeror's own format is acceptable unless the contracting officer determines that use of a specific format is essential.

A. If adequate price competition is expected, the information may include cost or technical information necessary to determine the cost realism and adequacy of the offeror's proposal, e.g., information adequate to validate that the proposed costs are consistent with the technical proposal, or cost breakdowns to help identify unrealistically low cost proposals.

B. If the offer is expected to be at or below the threshold set forth at 15.804–2(a)(1), and adequate price competition is not expected, the information may consist of data to permit the contracting officer and authorized representatives to determine price reasonableness, e.g., information to support an analysis of material costs (when sufficient information on labor and overhead rates is already available), or information on prices and quantities at which the offeror has previously sold the same or similar items.–

2. Any information submitted must support the price proposed. Include sufficient detail or cross references to clearly establish the relationship of the information provided to the price proposed. Support any information provided by explanations or supporting rationale as needed to permit the contracting officer and authorized representatives to evaluate the documentation.

* * * * *

(d) The requirement for submission of cost or pricing data is met if all cost or pricing data reasonably available to the offeror are either submitted or specifically identified in writing by the time of agreement on price or another time agreed upon by the parties. * * *

* * * * *

20. Section 15.804–7 is amended by revising paragraphs (b)(7)(i), (ii)(B), and (iii) to read as follows:

15.804–7 Defective Cost or Pricing Data

* * * * *

(b) * * *

(7)(i) In addition to the price adjustment amount, the Government is also entitled to interest on any overpayments. The Government is also entitled to penalty amounts on certain of these overpayments. Overpayment occurs only when payment is made for supplies or services accepted by the Government. Overpayments would not result from amounts paid for contract financing as defined in 32.902.

(ii) * * *

(B) Consider the date of each overpayment (The date of overpayment for this interest calculation shall be (*1*) the date payment was made for the related completed and accepted contract items, or (*2*) for subcontract defective pricing, the date payment was made to the prime contractor, based on prime contract progress billings or deliveries, which included payments for a completed and accepted subcontract item); and

* * * * *

(iii) In arriving at the amount due for penalties on contracts where the submission of defective cost or pricing data was a knowing submission, the contracting officer shall obtain an amount equal to the amount of overpayment made. Before taking any contractual actions concerning penalties, the contracting officer shall obtain the advice of counsel.

* * * * *

21. Section 15.804–8 is amended by revising the heading and adding paragraphs (h) and (i) to read as follows:

15.804–8 Contract Clauses and Solicitation Provisions

* * * * *

(h) *Requirements for Cost or Pricing Data or Other Information.* The contracting officer shall insert the provision at 52.215–41, Requirements for Cost or Pricing Data or Other Information, in solicitations only when it is contemplated that cost or pricing data or other information will be required. Use the provision with Alternate I to specify a format for cost or pricing data other than the format required by Table 15–2 of 15.804–6(b). Use the provision with Alternate II when copies of the proposal are to be sent to the administrative contracting officer and contract auditor. Use the provision with Alternate III when submission via electronic media is required. Replace the basic provision with Alternate IV when a SF 1411 will not be required because an exception applies, but other information is required pursuant to 15.804–5.

(i) *Requirements for Cost or Pricing Data or Other Information—Modifications.* The contracting officer shall insert the clause at 52.215–42, Requirements for Cost or Pricing Data or Other Information Modifications, in solicitations and contracts only if it is contemplated that cost or pricing data or other information will be required for modifications. Use the clause with Alternate I to specify a format for cost or pricing data other than the format required by Table 15–2 of 15.804–6(b). Use the clause with Alternate II if copies of the proposal are to be sent to the administrative contracting officer and contract auditor. Use the clause with Alternate III if submission via electronic media is required. Replace the basic clause with Alternate IV if a SF 1411 is not required because an exception applies, but other information is required pursuant to 15.804–5.

22. Section 15.805–1 is amended by adding paragraph (d) to read as follows:

15.805–1 General

* * * * *

(d) The Armed Services Pricing Manual (ASPM Volume I, ''Contract Pricing'', and Volume 2, ''Price Analysis'') was issued by the Department of Defense to guide pricing and negotiating personnel. The ASPM provides detailed discussion and examples applying pricing policies to pricing problems. ASPM is available for use for instruction and professional guidance. However, it is not directive and its references to Department of Defense forms and regulations should be considered informational only. Copies of ASPM Vol. 1 (Stock No. 008–000–00457–9) and Vol. 2 (Stock No. 008–000–00467–6) may be purchased from the Superintendent of Documents, U.S. Government Printing Office by telephone (202) 512–1800 or fax (202) 512–2250, or by mail order from the Superintendent of Documents, P.O. Box 371954, Pittsburgh, PA 15250–7954.

23. Section 15.805–2 is amended by adding paragraph (f) to read as follows:

15.805–2 Price Analysis

* * * * *_

(f) Comparison of proposed prices with prices for the same or similar items obtained through market research.–

24. Section 15.806–1 is amended in the first sentence of paragraph (a)(2) by removing the word ''claims'' and inserting ''requests'' in its place, and revising paragraph (b) to read as follows:

15.806–1 General

* * * * *_

(b) Unless the subcontract qualifies for an exception under 15.804–1, any contractor required to submit cost or pricing data also shall obtain cost or pricing data before awarding any subcontract or purchase order expected to exceed the pertinent threshold set forth at 15.804–2(a)(1), or issuing any modification involving a price adjustment expected to exceed the pertinent threshold set forth at 15.804–2(a)(1) (see example of pricing adjustment at 15.804–2(a)(1)(iii)). To waive subcontractor cost or pricing data, follow the procedures at 15.804–1(b)(5).

* * * * *_

25. Section 15.806–2 is amended by revising paragraph (a), the first sentence of paragraph (c), and paragraph (d) to read as follows:

15.806–2 Prospective Subcontractor Cost or Pricing Data

(a) The contracting officer shall require a contractor that is required to submit to the Government (or cause submission of) accurate, complete, and current cost or pricing data from prospective subcontractors in support of each subcontract cost estimate that is (1) $1,000,000 or more, (2) both more than the pertinent threshold set forth at 15.804–2(a)(1) and more than 10% of the prime contractor's proposed price, or (3) considered to be necessary for adequately pricing the prime contract.

These subcontract cost or pricing data may be submitted using a Standard Form (SF) 1411, Contract Pricing Proposal Cover Sheet (Cost or Pricing Data Required).

* * * * *–

(c) If the prospective contractor satisfies the contracting officer that a subcontract will be priced on the basis of one of the exceptions in 15.804–1, the contracting officer shall not require submission of cost or pricing data to the Government in that case. * * *–

(d) Subcontractor data shall be accurate, complete, and current as of the date of final price agreement or, if applicable, another date agreed upon between the parties, given on the contractor's Certificate of Current Cost or Pricing Data. The prospective contractor shall be responsible for updating a prospective subcontractor's data.

* * * * *–

26. Section 15.808 is amended by revising paragraphs (a) (6) and (7) to read as follows:

15.808 Price Negotiation Memorandum

(a) * * *

(6) If cost or pricing data were not required in the case of any price negotiation exceeding the thresholds set forth at 15.804–2(a)(1), the exception used and the basis for it.––

(7) If cost or pricing data were required by the head of the contracting activity under 15.804–2(a)(3), the rationale for such requirement.

* * * * * –

27. Section 15.812–1 is amended by revising paragraph (b) and the second sentence of paragraph (c) to read as follows:

15.812–1 General

* * * * *–

(b) However, the policy in paragraph (a) of this section does not apply to any contract or subcontract item of supply for which the price is, or is based on, an established catalog or market price of a commercial item sold in substantial quantities to the general public (see 15.804–1(b)(2)). –

(c) * * * The contracting officer shall require similar information when contracting by negotiation with full and open competition if adequate price competition is not expected (see 15.804–1(b)(1)). * * *

15.813 [Reserved] and 15.813–1 Through 15.813–7 [Removed]–

28. Section 15.813 is removed and reserved and subsections 15.813–1 through 15.813–7 are removed.

PART 16—TYPES OF CONTRACTS

16.203–4 [Amended]–

29. Section 16.203–4 is amended in paragraphs (a)(1)(ii) and (b)(1)(ii) by removing ''15.804–3'' and inserting ''15.804–1'' in its place. –

30. Section 16.501(c) is amended by revising the first sentence to read as follows:

16.501 General

* * * * *–

(c) Indefinite-delivery contracts may provide for firm fixed prices (see 16.202), fixed prices with economic price adjustment (see 16.203), fixed prices with prospective redetermination (see 16.205), or prices based on catalog or market prices (see 15.804–1(b)(2)). * * *

PART 31—CONTRACT COST PRINCIPLES AND PROCEDURES–

31. Section 31.205–26(e) is revised to read as follows:

31.205–26 Material Costs

* * * * *–

(e) Allowance for all materials, supplies, and services that are sold or transferred between any divisions, subdivisions, subsidiaries, or affiliates of the contractor under a common control shall be on the basis of cost incurred in accordance with this subpart. However, allowance may be at a price when it is the established practice of the transferring organization to price interorganizational transfers at other than cost for commercial work of the contractor or any division, subsidiary, or affiliate of the contractor under a common control, and when the item being transferred qualifies for an exception under 15.804–1 and the contracting officer has not determined the price to be unreasonable.

* * * * *

PART 33—PROTESTS, DISPUTES, AND APPEALS–

32. Section 33.207(d) is revised to read as follows:

33.207 Contractor Certification

* * * * *–

(d) The aggregate amount of both increased and decreased costs shall be used in determining when the dollar thresholds requiring certification are met (see example in 15.804–2(a)(1)(iii) regarding cost or pricing data).

* * * * *

PART 36—CONSTRUCTION AND ARCHITECT ENGINEERING CONTRACTS–

33. Section 36.402 is amended by revising the introductory text of paragraph (b) and paragraph (b)(1) to read as follows:

36.402 Price Negotiation

* * * * *–

(b) The contracting officer shall evaluate proposals and associated cost or pricing data or other information and shall compare them to the Government estimate.––

(1) When submission of cost or pricing data is not required (see 15.804–1 and 15.804–2, and any element of proposed cost differs significantly from the Government estimate, the contracting officer should request the offeror to submit cost data concerning that element (e.g., wage rates or fringe benefits, significant materials, equipment allowances, and subcontractor costs).

* * * * *

PART 45—GOVERNMENT PROPERTY–

34. Section 45.103(b)(1) is revised to read as follows:

45.103 Responsibility and Liability for Government Property

* * * * *–

(b) * * *––

(1) Negotiated fixed price contracts for which the contract price is not based upon an exception at 15.804–1;

* * * * *–

35. Section 45.106(b)(2) is revised to read as follows:

45.106 Government Property Clauses

* * * * *–

(b) * * *––

(2) If the contract is (i) a negotiated fixed-price contract for which prices are not based on an exception at 15.804–1, or (ii) a fixed-price service contract which is performed primarily on a government installation, provided the contracting officer determines it to be in the best interest of the government (see subpart 45.103(b)(4)), the contracting officer shall use the clause with its Alternate I.

* * * * *

PART 46—QUALITY ASSURANCE

46.804 [Amended]–

36. Section 46.804 is amended by removing ''(see 15.804–3(c))'' and inserting ''(see 15.804–1(b)(2))'' in its place.

PART 49—TERMINATION OF CONTRACTS

49.208 [Amended]–

37. Section 49.208 is amended in the introductory text by adding ''(Cost or Pricing Data Required)'' before the period at the end.

PART 52—SOLICITATION PROVISIONS AND CONTRACT CLAUSES–

38. Section 52.214–27 is amended by revising the clause date and paragraphs (a) and (e)(2) to read as follows:

52.214–27 Price Reduction for Defective Cost or Pricing Data—Modifications—Sealed Bidding

* * * * *

Price Reduction for Defective Cost or Pricing Data—Modifications—Sealed Bidding (XXX 1995)–

(a) This clause shall become operative only for any modification to this contract involving aggregate increases and/or decreases in costs, plus applicable profits, of more than the threshold for the submission of cost or pricing data at FAR 15.804–2(a)(1), except that this clause does not apply to a modification if an exception under FAR 15.804–1 applies.

* * * * *_

(e) * * *––

(2) A penalty equal to the amount of the overpayment, if the Contractor or subcontractor knowingly submitted cost or pricing data which were incomplete, inaccurate, or noncurrent.

(End of clause)

39. Section 52.214–28 is amended by revising the clause date and paragraphs (a), (b), and (d) to read as follows:

52.214–28 Subcontractor Cost or Pricing Data—Modifications—Sealed Bidding

* * * * *

Subcontractor Cost or Pricing Data—Modifications—Sealed Bidding (XXX 1995)–

(a) The requirements of paragraphs (b) and (c) of this clause shall (1) become operative only for any modification to this contract involving aggregate increases and/or decreases in costs, plus applicable profits, expected to exceed the threshold for submission of cost or pricing data at FAR 15.804–2(a)(1), and (2) be limited to such modifications.–

(b) Before awarding any subcontract expected to exceed the threshold for submission of cost or pricing data at FAR 15.804–2(a)(1) when entered into, or pricing any subcontract modifications involving aggregate increases and/or decreases in costs, plus applicable profits, expected to exceed the threshold for submission of cost or pricing data at FAR 15.804–2(a)(1), the Contractor shall require the subcontractor to submit cost or pricing data (actually or by specific identification in writing), unless an exception under FAR 15.804–1 applies.

* * * * *_

(d) The Contractor shall insert the substance of this clause, including this paragraph (d), in each subcontract that, when entered into, exceeds the threshold for submission of cost or pricing data at FAR 15.804–2(a)(1).

(End of clause)

52.215–22 [Amended]–

40. Section 52.215–22 is amended by revising the clause date to ''(XXX 1995)'', and in paragraph (d)(2) by removing ''For Department of Defense contracts only, a'' and inserting ''A'' in its place.–

41. Section 52.215–23 is amended by revising the clause date and paragraphs (a) and (e)(2) to read as follows:

52.215–23 Price Reduction for Defective Cost or Pricing Data—Modifications

* * * * *

Price Reduction for Defective cost or Pricing Data—Modifications (XXX 1995)–

(a) This clause shall become operative only for any modification to this contract involving a pricing adjustment expected to exceed the threshold for submission of cost or pricing data, at FAR 15.804–2(a)(1), except that this clause does not apply to a modification if an exception under FAR 15.804–1 applies.

* * * * *__

(e) * * *––––

(2) A penalty equal to the amount of the overpayment, if the Contractor or subcontractor knowingly submitted cost or pricing data which were incomplete, inaccurate, or noncurrent.

(End of clause)

42. Section 52.215–24 is amended by revising the clause date, paragraph (a), and the introductory text of (c) to read as follows:

52.215–24 Subcontractor Cost or Pricing Data

* * * * *

Subcontractor Cost or Pricing Data (XXX 1995)––

(a) Before awarding any subcontract expected to exceed the threshold for submission of cost or pricing data at FAR 15.804–2(a)(1), when entered into, or before pricing any subcontract modification involving a pricing adjustment expected to exceed the threshold for submission of cost or pricing data at FAR 15.804–2(a)(1), the Contractor shall require the subcontractor to submit cost or pricing data (actually or by specific identification in writing), unless an exception under FAR 15.804–1 applies.

* * * * *_

(c) In each subcontract that exceeds the threshold for submission of cost or pricing data at FAR 15.804–2(a)(1), when entered into, the Contractor shall insert either—

* * * * *_

43. Section 52.215–25 is amended by revising the clause date and paragraphs (a), (b) and (d) to read as follows:

52.215–25 Subcontractor Cost or Pricing Data—Modifications

* * * * *

Subcontractor Cost or Pricing Data—Modifications (XXX 1995)–

(a) The requirements of paragraphs (b) and (c) of this clause shall (1) become operative only for any modification to this contract involving a pricing adjustment expected to exceed the threshold for submission of cost or pricing data at FAR 15.804–2(a)(1); and (2) be limited to such modifications.–

(b) Before awarding any subcontract expected to exceed the threshold for submission of cost or pricing data at FAR 15.804–2(a)(1), when entered into, or pricing any subcontract modification involving a pricing adjustment expected to exceed the threshold for submission of cost or pricing data at FAR 15.804–2(a)(1), the Contractor shall require the subcontractor to submit cost or pricing data (actually or by specific identification in writing), unless an exception under FAR 15.804–1 applies.

* * * * *__

(d) The Contractor shall insert the substance of this clause, including this paragraph (d), in each subcontract that exceeds the threshold for submission of cost or pricing data at FAR 15.804–2(a)(1), when entered into.

(End of clause)

44. Section 52.215–26 is amended by revising the clause date and the last sentence in paragraph (b) to read as follows:

52.215–26 Integrity of Unit Prices

* * * * *

Integrity of Unit Prices (XXX 1995)

* * * * *

(b) * * * A price is based on an established catalog or market price only if the item being purchased is sufficiently similar to the catalog or market priced commercial item to ensure that any difference in prices can be identified without resort to cost analysis.

* * * * *

52.215–32 and 52.215–37 [Removed and Reserved)

45. Sections 52.215–32 and 52.215–37 are removed and reserved.

46. Sections 52.215–41 and 52.215–42 are added to read as follows:

52.215–41 Requirements for Cost or Pricing Data or Other Information

As prescribed in 15.804–8(h), insert the following provision:

Requirements for Cost or Pricing Data or Other Information (XXX 1995)

(a) In lieu of submitting cost or pricing data, offerors may submit a written request for exemption from the requirement for submission of cost or pricing data by submitting—

(1) SF 1412, Request for Exemption From Submission of Cost or Pricing Data;

(2) Information relative to an exemption granted for prior or repetitive acquisitions; or

(3) For commercial items not covered by another exception, information on prices at which the same item or similar items have been sold in the commercial market.

(b)(1) Unless the offeror is granted an exemption from the requirement to submit cost or pricing data, the offeror shall submit cost or pricing data on Standard Form (SF) 1411, Contract Pricing Proposal Cover Sheet (Cost or Pricing Data Required), with supporting attachments prepared in accordance with Table 15–2 of FAR 15.804–6(b)(2).

(2) As soon as practicable after final agreement on price, but before contract award (except for unpriced actions such as letter contracts), the offeror shall submit a Certificate of Current Cost or Pricing Data, as prescribed by FAR 15.804–4.

(End of provision)

Alternate I (XXX 1995). As prescribed in 15.804–8(h), substitute the following paragraph (b)(1) for paragraph (b)(1) of the basic provision: –

(b)(1) Unless the offeror is granted an exemption from the requirement to submit cost or pricing data, the offeror shall submit cost or pricing data on Standard Form (SF) 1411, Contract Pricing Proposal Cover Sheet (Cost or Pricing Data Required), with supporting attachments prepared in the following format:

Alternate II (XXX 1995). As prescribed in 15.804–8(h), add the following paragraph (c) to the basic provision:

(c) When the proposal is submitted, also submit one copy each, including the SF 1411 and supporting attachments, to: (1) the Administrative Contracting Officer, and (2) the Contract Auditor.

Alternate III (XXX 1995). As prescribed in 15.804–8(h), add the following paragraph (c) to the basic provision (if Alternate II is also used, redesignate as paragraph (d)):

(c) Submit the cost portion of the proposal via the following electronic media: (*Insert media format, e.g., electronic spreadsheet format, electronic mail, etc.*).

Alternate IV (XXX 1995). As prescribed in 15.804–8(h), replace the text of the basic provision with the following:

(a) Submission of cost or pricing data is not required.

(b) Provide information described below: (*Insert description of the information and the format that are required, including access to records necessary to permit an adequate evaluation of the proposed price in accordance with 15.804–6(a)(5). Standard Form 141X. Proposal Cover Sheet (Cost or Pricing Data Not Required), may be used for information other than cost or pricing data.)*

52.215–42 Requirements for Cost or Pricing Data or Other Information—Modifications

As prescribed in 15.804–8(i), insert the following clause:

Requirements for Cost or Pricing Data or Other Information—Modifications (XXX 1995)

(a) In lieu of submitting cost or pricing data for modifications under this contract, for price adjustments expected to exceed threshold set forth at FAR 15.804–2(a)(1), the Contractor may submit a written request for exemption from the requirement for submission of cost or pricing data by submitting—

(1) Standard Form 1412, Request for Exemption From Submission of Cost or Pricing Data;

(2) Information relative to an exemption granted for prior or repetitive acquisitions; or

(3) For commercial items not covered by another exception, information on prices at which the same item or similar items have been sold in the commercial market.

(b)(1) Unless the Contractor is granted an exemption from the requirement to submit cost or pricing data, the Contractor shall submit cost or pricing data on Standard Form (SF) 1411, Contract Pricing Proposal Cover Sheet (Cost or Pricing Data Required), with supporting attachments prepared in accordance with Table 15–2 of FAR 15.804–6(b)(2).

(2) As soon as practicable after final agreement on price, but before contract award (except for unpriced actions such as letter contracts), the offeror shall submit a certificate of Current Cost or Pricing Data, as prescribed by FAR 15.804–4.

(End of clause)

Alternate I (XXX) 1995). As prescribed in 15.804–8(i), substitute the following paragraph (b)(1) for paragraph (b)(1) of the basic clause.

(b)(1) Unless the Contractor is granted an exemption from the requirement to submit cost or pricing data, the Contractor shall submit cost or pricing data on Standard Form (SF) 1411, Contract Pricing Proposal Cover Sheet (Cost or Pricing Data Required), with supporting attachments prepared in the following format:

Alternate II (XXX 1995). As prescribed in 15.804–8(i), add the following paragraph (c) to the basic clause:

(c) When the proposal is submitted, also submit one copy each, including the SF 1411 and supporting attachments, to: (1) the Administrative Contracting Officer, and (2) the Contract Auditor.

Alternate III (XXX 1995). As prescribed in 15.804–8(i), add the following paragraph (c) to the basic clause (if Alternate II is also used, redesignate as paragraph (d)):

(c) Submit the cost portion of the proposal via the following electronic media: (*Insert media format*).

Alternate IV (XXX 1995). As prescribed in 15.804–8(i), replace the text of the basic provision with the following:

(a) Submission of cost or pricing data is not required.

(b) Provide information described below: *(Insert description of the information and the format that are required, including access to records necessary to permit an adequate evaluation of the proposed price in accordance with 15.804–6(a)(5). Standard Form 141X, Proposal Cover Sheet (Cost or Pricing Data Not Required), may be used for information other than cost or pricing data.)*

47. Section 52.215–XX is added to read as follows:

52.215–XX Audit—Commercial Items

As prescribed at 15.106–2, insert the following clause:

Audit—Commercial Items (XXX 1995)

(a) As used in this clause, records include books, documents, accounting procedures and practices, and other data, regardless of type and regardless of whether such items are in written form, in the form of computer data, or any other form.

(b) This paragraph applies to solicitations and contracts/subcontracts for commercial items that may be or have been granted an exemption from submittal of cost or pricing data under FAR 15.804–1(a)(2). In order to determine the accuracy of the information on prices at which the same or similar items have been sold in the commercial market, the Contracting Officer and authorized representatives have a right to examine such information provided by the offeror, Contractor, or subcontractor, and all records that directly relate to such information. This right shall expire two years after the date of award of the contract, or two years after the date of any modification to the contract, with respect to which this information is provided.

(c) If the prime Contractor and each higher-tier subcontractor were required to submit cost or pricing data, the Contractor shall insert the substance of this clause, including this paragraph (c), in each subcontract for which submission of cost or pricing data was required or was exempted under FAR 15.804–1(a)(2).

(End of clause)

52.216–2 Economic Price Adjustment—Standard Supplies

48. Section 52.216–2(a)(2) is amended by removing ''15.804–3'' and inserting ''15.804–1'' in its place.

49. Section 52.216–3 is amended by revising the clause date and paragraph (a)(2) to read as follows:

52.216–3 Economic Price Adjustment—Semistandard Supplies

* * * * *

Economic Price Adjustment—Semistandard Supplies (XXX 1995)

(a) * * * (2) meets the criteria of subsection 15.804–1 of the Federal Acquisition Regulation (FAR), and * * *

* * * * *

50. Section 52.216–5 is amended by revising the clause date and paragraph (d)(1)(i)(A) to read as follows:

52.216–5 Price Redetermination—Prospective

* * * * *

Price Redetermination—Prospective (XXX 1995)

* * * * *

(d) * * *

(1) * * *

(i) * * *

(A) An estimate and breakdown of the costs of these supplies or services on Standard Form 1411, Contract Pricing Proposal Cover Sheet (Cost or Pricing Data Required) (or in any other form on which the parties may agree);

* * * * *

51. Section 52.216–6 is amended by revising the clause date and paragraph (c)(1)(ii) to read as follows:

52.216–6 Price Redetermination—Retroactive

* * * * *

Price Redetermination—Retroactive (XXX 1995)

* * * * *

(c) * * *

(1) * * *

(ii) A statement on Standard Form 1411, Contract Pricing Proposal Cover Sheet (Cost or Pricing Data Required), or in any other form on which the parties may agree, of all costs incurred in performing the contract; and

* * * * *

52. Section 52.216–25, introductory text, is revised to read as follows:

52.216–25 Contract Definitization

As prescribed in 16.603–4(b)(3), insert the following clause in solicitations and contracts when a letter contract is contemplated. If, at the time of entering into the letter contract, the contracting officer knows that the definitive contract will be based on adequate price competition or will otherwise meet the criteria of 15.804–1 for not requiring submission of cost or pricing data, the words ''and cost or pricing data supporting its proposal'' may be deleted from paragraph (a) of the clause.

* * * * *

53. Section 52.222–48 is amended by revising the clause date and paragraph (a)(ii) to read as follows:

52.222–48 Exemption From Application of Service Contract Act Provisions for Contracts for Maintenance, Calibration, and/or Repair of Certain ADP, Scientific and Medical and/or Office and Business Equipment—Contractor Certification

* * * * *

Exemption From Application of Service Contract Act Provisions (XXX 1995)

(a) * * * (ii) The contract services are furnished at prices which are, or are based on, established catalog or market prices for the maintenance, calibration, and/or repair of certain ADP, scientific and medical and/or office and business equipment. An ''established catalog price'' is a price (including discount price) recorded in a catalog, price list schedule, or other verifiable and established record that is regularly maintained by the manufacturer or the Contractor, is either published or otherwise available for inspection by customers, and states prices at which sales are currently, or were last, made to a significant number of buyers constituting the general public. An ''established market price'' is a current price, established in the course of ordinary and usual trade between buyers and sellers free to bargain, which can be substantiated by data from sources independent of the manufacturer or Contractor; and * * *

* * * * *

PART 53—FORMS

54. Section 53.215–2 is revised to read as follows:

53.215–2 Price Negotiation (SF's 1411, 1412, and 141X)

The following standard forms are prescribed for use in connection with requirements for obtaining cost or pricing data or other information from offerors or contractors, as specified in 15.804:

(a) SF 1411 (REV. XXX/95), *Contract Pricing Proposal Cover Sheet (Cost or Pricing Data Required).* (See 15.804–6(b)(1).)

(b) SF 1412 (REV. XXX/95), *Request for Exemption from Submission of Cost or Pricing Data.* (See 15.804–1(e).)

(c) SF 1412A (XXX/95), *Continuation Sheet* (for SF 1412). SF 1412 and SF 1412A are authorized for local reproduction.

(d) SF 141X (XXX/95), *Proposal Cover Sheet (Cost or Pricing Data Not Required).* (See 15.804–6(b)(2).)

BILLING CODE 6820–34–U

CONTRACT PRICING PROPOSAL COVER SHEET
(Cost or Pricing Data Required)

1. SOLICITATION/CONTRACT MODIFICATION NO.

OMB No.: 9000-0013
Expires:

Public reporting burden for this collection of information is estimated to average 4 hours per response, including the time for reviewing instructions, searching existing data sources, gathering and maintaining the data needed, and completing and reviewing the collection of information. Send comments regarding this burden estimate or any other aspect of this collection of information, including suggestions for reducing this burden, to the FAR Secretariat (VRS), Office of Federal Acquisition Policy, GSA, Washington, DC 20405; and to the Office of Management and Budget, Paperwork Reduction Project (9000-0013), Washington, DC 20503.

NOTE: This form is used in contract action if submission of cost or pricing data is required. *(See FAR 15.804-6(b))*

2. NAME AND ADDRESS OF OFFEROR *(Include ZIP Code)*

3A. NAME AND TITLE OF OFFEROR'S POINT OF CONTACT

4. TYPE OF CONTRACT ACTION *(Check)*

- A. NEW CONTRACT
- B. CHANGE ORDER
- C. PRICE REVISION/REDETERMINATION
- D. LETTER CONTRACT
- E. UNPRICED ORDER
- F. OTHER *(Specify)*

5. TYPE OF CONTRACT *(Check)*

- FFP
- CPFF
- CPIF
- CPAF
- FPI
- OTHER *(Specify)*

6. PROPOSED COST *(A + B = C)*

A. COST	B. PROFIT/FEE	C. TOTAL

7. PLACE(S) AND PERIOD(S) OF PERFORMANCE

8. List and reference the identification, quantity and total price proposed for each contract line item. A line item cost breakdown supporting this recap is required unless otherwise specified by the Contracting Officer. *(Continue on reverse, and then on plain paper if necessary. Use same headings.)*

A. LINE ITEM NO.	B. IDENTIFICATION	C. QUANTITY	D. TOTAL PRICE	E. (PROP) REF. (P

9. PROVIDE NAME, ADDRESS, AND TELEPHONE NUMBER FOR THE FOLLOWING *(If available)*

A. CONTRACT ADMINISTRATION OFFICE

B. AUDIT OFFICE

10. WILL YOU REQUIRE THE USE OF ANY GOVERNMENT PROPERTY IN THE PERFORMANCE OF THIS WORK? *(If "yes," identify)*

- YES
- NO

11A. DO YOU REQUIRE GOVERNEMNT CONTRACT FINANCING TO PERFORM THIS PROPOSED CONTRACT? *(If "Yes," complete Item 11B)*

- YES
- NO

11B. TYPE OF FINANCING *(Check one)*

- ADVANCE PAYMENT
- PROGRESS PAYMENTS
- GUARANTEED LOANS

12. HAVE YOU BEEN AWARDED ANY CONTRACTS OR SUBCONTRACTS FOR THE SAME OR SIMILAR ITEMS WITHIN THE PAST 3 YEARS? *(If "Yes," identify item(s), customer(s) and contract number(s))*

- YES
- NO

13. IS THIS PROPOSAL CONSISTENT WITH YOUR ESTABLISHED ESTIMATING AND ACCOUNTING PRACTICES AND PROCEDURES AND FAR PART 31, COST PRINCIPLES? *(If "no," explain)*

- YES
- NO

14. COST ACCOUNTING STANDARDS BOARD (CASB) STATE *(Public Law 91-379 as amended and FAR PART 30)*

A. WILL THIS CONTRACT ACTION BE SUBJECT TO CASB REGULATIONS? *(If "No," explain in proposal)*

- YES
- NO

B. HAVE YOU SUBMITTED A CASB DISCLOSURE STATEMENT (CASB DS-1 or 2)? (If "Yes," specify in proposal the office to which submitted and if determined to be adequate)

- YES
- NO

C. HAVE YOU BEEN NOTIFIED THAT YOU AND/OR MAY BE IN NONCOMPLIANCE WITH YOUR DISCLOSURE STATEMENT OR COST ACCOUNTING STANDARDS? (If "Yes," explain in proposal)

- YES
- NO

D. IS ANY ASPECT OF THIS PROPOSAL INCONSISTENT WITH YOUR DISCLOSED PRACTICES OR APPLICABLE COST ACCOUNTING STANDARDS? *(If "Yes," explain in proposal)*

- YES
- NO

This proposal is submitted in response to the RFP, contract, modification, etc., in Item 1 and reflects our estimates and/or actual costs as of this date and conforms with the instructions in FAR 15.804-6(b)(2), Table 15-2. By submitting this proposal, the offeror, if selected for negotiation, grants the contracting officer and authorized representative(s) the right to examine, at any time before award, those records, which include books, documents, accounting procedures and practices, and other data, regardless of type and regardless of whether such things are in written form, in the form of computer data, or any other form, or whether such supporting information is specifically referenced or included in the proposal as the basis for pricing, that will permit an adequate evaluation of the proposed price.

15. NAME AND TITLE *(Type)*

16. NAME OF FIRM

17. SIGNATURE

18. DATE OF SUBMISSION

STANDARD FORM 1411 (REV.)
Prescribed by GSA - FAR (48 CFR) 53.215-2(a)

DRAFT

REQUEST FOR EXAMPTION FROM SUBMISSION OF CERTIFIED COST OR PRICING DATA
(See reverse for instructions)

OMB No.: 9000-0013
Expires: 03/31/96

Public reporting burden for this collection of information is estimated to average 3.89 hours per response, including the time for reviewing instructions, searching existing data sources, gathering and maintaining the data needed, and completing and reviewing the collection of information. Send comments regarding this burden estimate or any other aspect of this collection of information, including suggestions for reducing this burden, to the Office of Federal Acquisition Policy, (VR), GSA, Washington, DC 20405, and to the Office of Management and Budget, Paperwork Reduction Project (9000-0013), Washington, DC 20503.

1. OFFEROR (Name, address, ZIP code)	2. SOLICITATION NUMBER	
	3. ITEM OF SUPPLIES AND/OR SERVICES TO BE FURNISHED	
4. DIVISION(S) AND LOCATION(S) WHERE WORK IS TO BE PERFORMED	5. QUANTITY	6. TOTAL AMOUNT PROPOSED FOR ITEM $

By submission of this form the offeror requests exemption from requirements for submitting certified cost or pricing data on the basis that the price offered is based on an established catalog or market price of a commercial item sold in substantial quantitites to the general public or is aprice set by law or regulation (see FAR 15.804-3). Complete Section I, II, or III below as applicable.

SECTION I - CATALOG PRICE *(See instructions for Items 7 thru 11 on reverse.)*

7. CATALOG IDENTIFICATION AND DATE	8. SALES PERIOD COVERED	
	FROM	TO

9. CATEGORIES OF SALES	TOTAL UNITS SOLD *	10. REMARKS
a. Sales at catalog price to the general public		
b. Total sales of catalog item to all customers		

*If your accounting system does not provide precise information, insert your best estimate and explain the basis for it in Item 10, REMARKS. Conintue on a separate sheet, if necessary.

11. LIST THREE SALES OF THE ITEM OFFERED

SALES CATEGORY	DATE	NO. OF UNITS SOLD	PRICE/UNIT
a. Lowest price, any customer, any quantity			$
b. Lowest price, any customer, comparable quantities			$
c. Lowest price, any customer, same customer class, comparable quantities			$

SECTION II - MARKET PRICE *(See instructions for Item 12 on reverse.)*

12. SET FORTH THE SOURCE AND DATE OR PERIOD OF THE MARKET QUOTATION OR OTHER BASE FOR MARKET PRICE, THE BASE AMOUNT, AND APPLICABLE DISCOUNTS

SECTION III - LAW OR REGULATION *(See insrtructions for Item 13 on reverse.)*

13. IDENTIFY THE LAW OR REGULATION ESTABLISHING THE PRICE OFFERED

REPRESENTATION *(See instructions for Item 14 on reverse.)*

The offeror certifies to the best of its knowledge and belief that all data submitted concerning the items listed on this form are current, accurate, and complete as of the date of submittal to the Government and are in accordance with the instructions printed on the back of this form and that, except as stated in an attachment, a similar request for exemption involving the same or a similar item has not been denied by the Government within the last 2 years. By submitting this proposal, the offeror, if selected for negotiation, grants the contracting officer or an authorized representative the right to examine at any time before award, thos books, records, documents, and other supporting data that will permit verification of the request and an adequate evaluation of the proposed price. Access does not extend to cost or profit information or other data relevant solely to the offeror's determination of the prices to be offered in the catalog or marketplace.

14a. TYPED NAME, TITLE, AND FIRM	14b. SIGNATURE	15. DATE OF SUBMISSION

AUTHORIZED FOR LOCAL REPRODUCTION
Previous edition not useable

STANDARD FORM 1412 (REV.)
Prescribed by GSA
FAR (48 CFR) 53.215-2(b)

DRAFT

Instructions to Offerors Submitting Request for Examption from Submission of Certified Cost or Pricing Data

The Offeror shall use the SF 1412 to submit a request for exemption from the submission of certified cost or pricing data. Attach all supporting information described below to the SF 1412. Complete Section I, Items 7 through 11, if you are proposing a catalog price. Complete Section II, Item 12, if you are proposing a market price. Complete Section III, Item 13, if you are proposing a price set by law or regulation.

Items 1-6. Self-explanatory. Provide information identified in the applicable block for each item for which an exemption is requested.

Item 7. Attach a copy of or identify the catalog and its date, or the appropriate pages for the offered items, or a statement that the catalog is on file in the buying office to which this proposal is being made.

Additional Information. Provide the following additional information in Items 7 - 11 for the catalog item with the highest total proposed price for the total quantity and for each catalog item with a total proposed price exceeding $[illegible],000, or for additional items as requested by the contracting officer.

Item 7. Established catalog price and established discount factor are defined at FAR 15.804-3(c). Provide a copy or describe all current discount policies and price lists (published or unpublished) applicable to each class of customer. Show rebates, discounts applicable to multiple quantities or cumulative orders, and volume discounts applicable to the combination of supplies or services into one order. If the proposed price of a catalog item was determined on the basis of assignment of the Government to a particular customer class, identify the customer class and state the reasons for selecting that customer class. To justify a catalog price exemption for the Government item, the catalog item and the offered item must be the same or similar. "Similar items" is defined at FAR 15.804-3(c). For similar items, a statement must be attached identifying the technical differences and explaining, by price analysis, how the proposed price is derived from the catalog price.

Item 8. Sales period for block 9 sales information. This period should include the most recent regular quarterly or longer period for which sales data are reasonably available and should extend back only far enough to provide a total period representative of average sales. You may also attach sales data for a prior representative period if for any reason recent sales are abnormal and the prior period is sufficiently recent to support the proposed price for the Government item. In the latter case, you must explain, by price analysis only, how the proposed price is derived from the sales made at catalog price for the prior period.

Item 9. (a) Identify the amount of all sales of the catalog item at catalog price, or at an established discount from the catalog price, to the general public as defined in FAR 15.804-3(c) that were made during the period identified in block 8. See FAR 15.804-[illegible](1) if you want sales by affiliates to be considered. (b) Identify the total amount of sales of the catalog item to all customers.

Item 11. Insert the following information on sales made during the most recent regular quarterly or longer period for which sales data are available:

On line a, insert information on the lowest price at which sales of the offered item were made to any customer during the period, regardless of quantity.

On line b, insert the lowest price at which any sales of the offered item were made at comparable quantities to any customer.

On line c, if the proposed price of the catalog item was determined on the basis of assignment of the Government to a particular customer class, insert the lowest price at which sales of the offered item were made at comparable quantities to any customer in that class.

Attach a complete explanation if the price proposed is not the lowest price at which a sale was made to any customer during the period for the same or similar items.

Item 12. Market price exemption criteria appear at FAR 15.804-3(d)(2). The nature of this market should be described. To justify a market-price exemption, the item or service being purchased must be the same as or similar to the market price item or service. Similar item is defined in FAR 15.804-3(c). For similar items, a statement must be attached identifying the specific differences and explaining, by price analysis of the differences (see FAR 15.804-3(f)), how the proposed price is derived from the market price.

Item 13. Identify the law or regulation establishing the price offered. If the price is controlled under law by periodic rulings, reviews or similar actions of a governmental body, attach a copy of the controlling document, unless it was previously submitted to the contracting office.

Item 14. Insert the name and title of the person authorized by the offeror to sign this form.

PRELIMINARY

REQUEST FOR EXEMPTION FROM SUBMISSION OF CERTIFIED COST OR PRICING DATA - CONTINUATION *(See reverse for instructions.)*	2. SOLICITATION NUMBER	OMB NO.: 9000-0013 Expires: 03/31/96

3. ITEM OF SUPPLIES AND/OR SERVICES TO BE FURNISHED

4. DIVISION(S) AND LOCATION(S) WHERE WORK IS TO BE PERFORMED	5. QUANTITY	6. TOTAL AMOUNT PROPOSED FOR ITEM
		$

SECTION I - CATALOG PRICE *(See instructions for Items 7 thru 11 on reverse.)*

7. CATALOG IDENTIFICATION AND DATE	8. SALES PERIOD COVERED	
	FROM	TO

9. CATEGORIES OF SALES	TOTAL UNITS SOLD*	10. REMARKS
a. Sales at catalog price to the general public		
b. Total sales of catalog item to all customers		

*If your accounting system does not provide precise information, insert your best estimate and explain the basis for it in Item 10, REMARKS. Continue on a separate sheet, if necessary.

11. LIST THREE SALES OF THE ITEM OFFERED

SALES CATEGORY	DATE	NO. OF UNITS SOLD	PRICE/UNIT
a. Lowest price, any customer, any quantity			$
b. Lowest price, any customer, comparable quantitites			$
c. Lowest price, any customer, same customer class, comparable quantities			$

SECTION II - MARKET PRICE *(See instructions for Item 12 on reverse.)*

12. SET FORTH THE SOURCE AND DATE OR PERIOD OF THE MARKET QUOTATION OR OTHER BASIS FOR MARKET PRICE, THE BASE AMOUNT, AND APPLICABLE DOISCOUNTS

SECTION III - LAW OR REGULATION *(See instructions for Item 13 on reverse.)*

13. IDENTIFY THE LAW OR REGULATION ESTABLISHING THE PRICE OFFERED

DRAFT

Instructions to Offerors Submitting Continuation Sheets for a Request for Exemption from Submission of Certified Cost or Pricing Data

The Offeror shall submit the SF 1412A Continuation Sheet in accordance with the requirements of FAR 15.804-3(e)(1) for additional items that do not fit on a single SF 1412. Attach all supporting information described below to the SF 1412A. Complete Section I, Items 7 through 11, if you are proposing a catalog price. Complete Section II, Item 12, if you are proposing a market price. Complete Section III, Item 13, if you are proposing a price set by law or regulation.

Items 2, 4, 5 & 6. Self-explanatory. Provide information identified in the applicable block for each item for which an exemption is requested.

Item 7. Attach a copy of or identify the catalog and its date, or the appropriate pages for the offered items, or a statement that the catalog is on file in the buying office to which this proposal is being made.

Additional Information. Provide the following additional information in Items 7 - 11 for each catalog item with the highest total proposed price for the total quantity and for each catalog item with a total proposed price exceeding $100,000, or for additional items as requested by the contracting officer.

Item 7. Established catalog price and established discount factor are defined at FAR 15.804-3(c). Provide a copy or describe all current discount policies and price lists (published or unpublished) applicable to each class of customer. Show rebates, discounts applicable to variable quantities or cumulative orders, and volume discounts applicable to the combination of supplies or services into one order. If the proposed price of a catalog item was determined on the basis of assignment of the Government to a particular customer class, identify the customer class and state the reasons for selecting that customer class. To justify a catalog price exemption for the Government item, the catalog item and the offered item must be the same or similar. "Similar item" is defined at FAR 15.804-3(c). For similar items, a statement must be attached identifying the technical differences and explaining, by price analysis, how the proposed price is derived from the catalog price.

Item 8. Sales period for block 9 sales information. This period should include the most recent regular quarterly or longer period for which sales data are reasonably available and should extend back only far enough to provide a total period representative of average sales. You may also attach sales data for a prior representative period if, for any reason recent sales are abnormal and the prior period is sufficiently recent to support the proposed price for the Government item. In the latter case, you must explain, by price analysis only, how the proposed price is derived from the sales made at catalog price for the prior period.

Item 9. (a) Identify the amount of all sales of the catalog item at catalog price or at an established discount from the catalog price, to the general public as defined in FAR 15.804-3(c) that were made during the period identified in Block 8. See FAR 15.804-3(d)(1) if you want sales by affiliates to be considered. (b) Identify the total amount of sales of the catalog item to all customers.

Item 11. Insert the following information on sales made during the most recent regular quarterly or longer period for which sales data are available:

On line a, insert information on the lowest price at which sales of the offered item were made to any customer during the period, regardless of quantity.

On line b, insert the lowest price at which any sales of the offered item were made at comparable quantities to any customer.

On line c, if the proposed price of the catalog item was determined on the basis of assignment of the Government to a particular customer class, insert the lowest price at which sales of the offered item were made at comparable quantities to any customer in that class. Attach a complete explanation if the price proposed is not the lowest price at which a sale was made to any customer during the period for the same or similar items.

Item 12. Market price exemption criteria appear at FAR 15.804-3(d)(2). The nature of this market should be described. To justify a market-price exemption, the item or service being purchased must be the same as or similar to the market price item or service. "Similar item" is defined in FAR 15.804-3(c). For similar items, a statement must be attached identifying the specific differences and explaining, by price analysis of the differences (see FAR 15.804-3(f)), how the proposed price is derived from the market price.

Item 13. Identify the law or regulation establishing the price offered. If the price is controlled under law by periodic rulings, reviews or similar actions of a governmental body, attach a copy of the controlling document, unless it was previously submitted to the contracting office.

PROPOSAL COVER SHEET
(Cost or Pricing Data Not Required)

1. SOLICITATION/CONTRACT/MODIFICATION NO.

OMB NO.: 9000-0013
Expires:

Public reporting burden for this collection of information is estimated to average 4 hours per response, including the time for reviewing instructions, searching existing data sources, gathering and maintaining the data needed, and completing and reviewing the collection of information. Send comments regarding this burden estimate or any other aspect of this collection of information, including suggestions for reducing this burden, to the FAR Secretariat (VRS), Office of Federal Acquisition Policy, GSA, Washington, DC 20405; and to the Office of Management and Budget, Paperwork Reduction Project (9000-0013), Washington, DC 20503.

2. NAME AND ADDRESS OF OFFEROR *(Include ZIP Code)*

3A. NAME AND TITLE OF OFFEROR'S POINT OF CONTACT

3B. TELEPHONE NO.

4. TYPE OF CONTRACT ACTION *(Check)*

- A. NEW CONTRACT
- B. CHANGE ORDER
- C. PRICE REVISION/REDETERMINATION
- D. LETTER CONTRACT
- E. UNPRICED ORDER
- F. OTHER *(Specify)*

5. TYPE OF CONTRACT *(Check)*

FFP FPI CPFF OTHER *(Specify)* CPIF CPAF

6. PROPOSED COST *(A+B=C)*

A. COST	B. PROFIT/FEE	C. TOTAL

7. PLACE(S) AND PERIOD(S) OF PERFORMANCE

8. List and reference the identification, quantity and total price proposed for each contract line item. *(Continue on reverse, if necessary. Use same headings)*

A. LINE ITEM NO.	B. IDENTIFICATION	C. QUANTITY	D. TOTAL PRICE	E. (PROP) REF. (P

9. PROVIDE NAME, ADDRESS, AND TELEPHONE NUMBER FOR THE FOLLOWING *(If available)*

A. CONTRACT ADMINISTRATION OFFICE

B. AUDIT OFFICE

10. WILL YOU REQUIRE THE USE OF ANY GOVERNMENT PROPERTY IN THE PERFORMANCE OF THIS WORK? *(If "Yes" identify)*

YES NO

11A. DO YOU REQUIRE GOVERNMENT CONTRACT FINANCING TO PERFORM THIS PROPOSED CONTRACT? *(If "Yes," complete Item 11B) (See FAR Part 32)*

YES NO

11B. TYPE OF FINANCING *(Check one)*

ADVANCE PAYMENT PROGRESS PAYMENTS GUARANTEED LOANS

12. HAVE YOU BEEN AWARDED ANY CONTRACTS OR SUBCONTRACTS FOR THE SAME OR SIMILAR ITEMS WITHIN THE PAST 3 YEARS? *(If "Yes," identify item(s), customer(s) and contract number(s)*

YES NO

13. IS THIS PROPOSAL CONSISTENT WITH YOUR ESTABLISHED ESTIMATING AND ACCOUNTING PRACTICES AND PROCEDURES AND FAR PART 31, COST PRINCIPLES? *(If "No," explain)*

YES NO

14. COST ACCOUNTING STANDARDS BOARD (CASB) DATA *(Public Law 91-379 as amended and FAR PART 30)*

A. WILL THIS CONTRACT ACTION BE SUBJECT TO CASB REGULATIONS? *(If "No," explain in proposal)*

YES NO

B. HAVE YOU SUBMITTED A CASB DISCLOSURE STATEMENT (CASB DS-1 or 2)? *(If "Yes," specify in proposal the office to which submitted and if determined to be adequate)*

YES NO

C. HAVE YOU BEEN NOTIFIED THAT YOU ARE OR MAY BE IN NONCOMPLIANCE WITH YOUR DISCLOSURE STATEMENT OR COST ACCOUNTING STANDARDS? *(If "Yes," explain in proposal)*

YES NO

D. IS ANY ASPECT OF THIS PROPOSAL INCONSISTENT WITH YOUR DISCLOSED PRACTICES OR APPLICABLE COST ACCOUNTING STANDARS? *(If "Yes," explain in proposal)*

YES NO

This proposal is submited in response to the solicitation, contract, modification, etc. in Item 1. By submitting this proposal, the offeror, if selected for discussions, grants the contracting officer or an authorized representative the right to examine, at any time before award, any of those books, records, documents, or other records directly pertinent to the information requested or submitted. See instructions at Table 15-3.

15. NAME AND TITLE *(Type)*

16. NAME OF FIRM

17. SIGNATURE

18. DATE OF SUBMISSION

STANDARD FORM 14XX (REV.)
Prescribed by GSA - FAR (48 CFR) 53.215-2(a)

DRAFT

[FR Doc. 95–12 Filed 1–5–95; 8:45 am]
BILLING CODE 6820–34–C

federal register

Friday
January 6, 1995

Part IV

Department of Defense

General Services Administration

National Aeronautics and Space Administration

48 CFR Ch. 1

Federal Acquisition Regulation; Small Business; Proposed Rule

DEPARTMENT OF DEFENSE

GENERAL SERVICES ADMINISTRATION

NATIONAL AERONAUTICS AND SPACE ADMINISTRATION

48 CFR Chapter 1

[FAR Case 94–780]

RIN 9000–AG37

Federal Acquisition Regulation; Small Business

AGENCIES: Department of Defense (DOD), General Services Administration (GSA), and National Aeronautics and Space Administration (NASA).

ACTION: Proposed rule.

SUMMARY: This proposed rule is issued pursuant to the Federal Acquisition Streamlining Act of 1994, Public Law 103-355 (the Act). The Federal Acquisition Regulatory Council is considering amending the Federal Acquisition Regulation (FAR) as a result of changes to 41 U.S.C. 22 by Sections 4004, 7101, 7102, and 7106 of the Act. This regulatory action was not subject to Office of Management and Budget review under Executive Order 12866, dated September 30, 1993.

DATES: Comment Due Date: Comments should be submitted on or before March 7, 1995 to be considered in the formulation of a final rule.

Public Meeting: A public meeting will be held on February 3, 1995, at 9:30 a.m.–

Oral/Written Statements: Views to be presented at the public meeting should be sent, in writing, to the FAR Secretariat, at the address given below, not later than January 31, 1995.

ADDRESSES: Interested parties should submit written comments to: –General Services Administration, FAR Secretariat (VRS), 18th & F Streets, NW, Room 4037, Washington, DC 20405, Telephone: (202) 501–4755.

The public meeting will be held at:– General Services Administration Auditorium, 18th & F Streets, NW, First Floor, Washington, DC 20405.

Please cite FAR case 94–780 in all correspondence related to this case.

FOR FURTHER INFORMATION CONTACT: Ms. Victoria Moss, Small Business Team Leader, at (202) 501–1143 in reference to this FAR case. For general information, contact the FAR Secretariat, Room 4037, GS Building, Washington, DC 20405 (202) 501–4755. Please cite FAR case 94–780.

SUPPLEMENTARY INFORMATION:

A. Background

The Federal Acquisition Streamlining Act of 1994, Pub. L. 103–355 (the Act), provides authorities that streamline the acquisition process and minimize burdensome government-unique requirements. Major changes that can be expected in the acquisition process as a result of the Act's implementation include changes in the areas of Commercial Item Acquisition, Simplified Acquisition Procedures, the Truth in Negotiations Act, and introduction of the Federal Acquisition Computer Network. In order to promptly achieve the benefits of the provisions of the Act, the Government is issuing implementing regulations on an expedited basis. We believe prompt publication of proposed rules provides the public the opportunity to participate more fully in the process of developing regulations.

This notice announces FAR revisions developed under FAR case 94–780. The following sections of the Federal Acquisition Streamlining Act are implemented by this proposed rule:

a. Section 4004, Small Business Reservation, amends section 15(j) of the Small Business Act to reserve each contract for the purchase of goods or services that have an anticipated value greater than $2,500, but not greater than $100,000, for exclusive small business participation unless the contracting officer is unable to obtain offers from two or more small businesses that are competitive with market price, quality and delivery.–

b. Section 7101, Repeal of Certain Requirements, paragraph (a) deletes sections 15(e) and (f) from the Small Business Act. These sections established the priority for the award of contracts and subcontracts in carrying out the set-aside programs.

c. Section 7102, Contracting Program for Certain Small Business Concerns (not applicable to DOD, NASA, and the Coast Guard), amends Section 15(g)(1) of the Small Business Act to permit the Head of an Agency to enter into competition using less than full and open competition by restricting competition to small disadvantaged businesses (SDB's) or by using a price evaluation preference of up to 10 percent when evaluating SDB offers received as a result of an unrestricted solicitation.–

d. Section 7106, Procurement Goals for Small Business Concerns Owned by Women, establishes a Governmentwide goal for participation by women-owned small business concerns in prime contracts and subcontracts and revises sections 8 and 15 of the Small Business Act to accommodate the goal.

Public Meeting

The FAR Council is interested in an exchange of ideas and opinions with respect to the regulatory implementation of the Act. For that reason, the FAR Council is conducting a series of public meetings. The public is encouraged to furnish its views; the FAR Council anticipates that public comments will be very helpful in formulating final rules.

A public meeting will be held on February 3, 1995, to enable the public to present its views on this rule. This rule will only be discussed at the public meeting session. Any subsequent public meetings will be devoted to other revisions to the FAR.

Persons or organizations wishing to make presentations will be allowed 10 minutes each to present their views, provided they notify the FAR Secretariat at (202) 501–4755. Written statements for presentation should be submitted to the FAR Secretariat by January 31, 1995. Persons or organizations with similar positions are encouraged to select a common spokesman for presentation of their views. This meeting, in conjunction with the **Federal Register** notice soliciting public comments on the rule, will be the only opportunity for the public to present its views.

B. Regulatory Flexibility Act

The proposed rule contains a number of amendments that will have a beneficial effect on a substantial number of small entities within the meaning of the Regulatory Flexibility Act, 5 U.S.C. 601, *et seq.; e.g.*, the rule provides for the targeting for procurements to small disadvantaged businesses through small disadvantaged business set-asides and an evaluation preference in unrestricted procurements; puts women-owned small businesses on an equal footing with small disadvantaged businesses in subcontracting plan requirements; automatically sets aside acquisitions greater than $2,500 but not greater than $100,000 for small business; and simplifies and clarifies the small business representations. Since the rule is considered significantly beneficial to small entities, an Initial Regulatory Flexibility Analysis has not been performed. Comments from small entities concerning the affected FAR subpart will be considered in accordance with 5 U.S.C. 610 of the Act. Such comments must be submitted separately and should cite 5 U.S.C. 601, *et seq.* (FAR case 94–780, Small Business (Pub. L. 103–355, Federal

Acquisition Streamlining Act of 1994)), in correspondence.

C. Paperwork Reduction Act–

The Paperwork Reduction Act does apply because the proposed changes to the FAR affect recordkeeping and information collection requirements, or collections of information from offerors, contractors, or members of the public which require the approval of the Office of Management and Budget under 44 U.S.C. 3501, *et seq.* Requests for approval of revised clearances 9000–0006 and 9000–0007 have been submitted to OMB under separate cover.

List of Subjects in 48 CFR Chapter 1

Government procurement.

Dated: December 27, 1994.

Capt. Barry Cohen,

SC, USN, Project Manager for the Implementation of the Federal Acquisition Streamlining Act of 1994.–

Therefore, it is proposed that 48 CFR Chapter 1 be amended as set forth below:–

1. The authority citation for 48 CFR Chapter 1 continues to read as follows:

Authority: 40 U.S.C. 486(c); 10 U.S.C. chapter 137; and 42 U.S.C. 2473(c).

PART 4—ADMINISTRATIVE MATTERS

2. Section 4.602 is amended by revising paragraph (a)(2) to read as follows:

4.602 Federal Procurement Data System.–

(a) * * *–

(2) a means of measuring and assessing the impact of Federal contracting on the Nation's economy and the extent to which small, small disadvantaged and women-owned small business concerns are sharing in Federal contracts; and

* * * * *–

3. Section 4.603 is added to read as follows:

4.603 Solicitation provision.–

The contracting officer shall insert the provision at 52.204–00, Women-Owned Business, in all solicitations exceeding the simplified acquisition threshold in part 13 when the contract is to be performed inside the United States, its territories or possessions, Puerto Rico, the Trust Territory of the Pacific Islands, or the District of Columbia.

PART 5—PUBLICIZING CONTRACT ACTIONS

5.002 [Amended]–

4. Section 5.002 is amended in paragraph (c) by removing ''labor surplus area'' and inserting in its place ''women-owned small business''.

5. Section 5.207 is amended in paragraph (c)(2)(xii) by removing ''labor surplus area concerns'' and inserting in its place ''small disadvantaged businesses''; and by revising paragraph (d) to read as follows:

5.207 Preparation and transmittal of synopses.

* * * * *–

(d) *Set-asides.* When the proposed acquisition provides for a total or partial small business set-aside or small disadvantaged business set aside, the appropriate CBD Numbered Note will be cited.

* * * * *

5.404–1 [Amended]

6. Section 5.404–1 is amended in paragraph (b)(6)(ii) by removing ''LSA'' and inserting in its place ''small disadvantaged business''.

7. Section 5.503 is amended by revising the second sentence of paragraph (a) to read as follows:

5.503 Procedures.

(a) * * * Contracting officers shall give small, small disadvantaged and women-owned small business concerns maximum opportunity to participate in these acquisitions.

* * * * *

PART 6—COMPETITION REQUIREMENTS

8. Section 6.203 is revised to read as follows:

6.203 Set-asides for small and small disadvantaged business concerns.–

(a) To fulfill the statutory requirements relating to small and small disadvantaged business concerns, contracting officers may set aside solicitations to allow only such business concerns to compete. This includes contract actions conducted under the Small Business Innovation Research Program established under Pub. L. 97–219.

(b) No separate justification or determination and findings is required under this part to set aside a contract action for small or small disadvantaged business concerns.

(c) Subpart 19.5 prescribes policies and procedures that shall be followed with respect to set-asides.

PART 7—ACQUISITION PLANNING–

9. Section 7.105 is amended by revising the third sentence of paragraph (b)(1) to read as follows:

7.105 Contents of written acquisition plans.

* * * * *–

(b) * * *–

(1) * * * Include consideration of small business and small disadvantaged business concerns (see part 19). * * *

* * * * *

PART 8—REQUIRED SOURCES OF SUPPLIES AND SERVICES

10. Section 8.404 is amended by revising the last sentence of paragraph (a) to read as follows:

8.404 Using schedules.

(a) * * * When placing orders under a Federal Supply Schedule, ordering activities need not seek further competition, synopsize the requirement, make a separate determination of fair and reasonable pricing, or consider set-asides in accordance with 19.503.

* * * * *

PART 9—CONTRACTOR QUALIFICATIONS

11. Section 9.104–3 is amended by revising the last sentence of paragraph (c) to read as follows:

9.104–3 Application of standards.

* * * * *–

(c) * * *

If the pending contract requires a subcontracting plan pursuant to Subpart 19.7, Subcontracting with Small, Small Disadvantaged and Women-Owned Small Business Concerns, the contracting officer shall also consider the prospective contractor's compliance with subcontracting plans under recent contracts.

* * * * *

PART 14—SEALED BIDDING

14.205–4 [Amended]

12. Section 14.205–4 is amended in the fourth sentence of paragraph (b) by inserting after the word ''small'' the phrase '', small disadvantaged and women-owned small''; and removing ''and labor surplus areas (see 20.104(e) and (f))''; and in the last sentence of (b)(3) by removing ''parts 19 and 20'' and inserting in its place ''part 19''.

13. Section 14.206 is revised to read as follows:

14.206 Small business and small disadvantaged business set-asides.–

(See part 19.)

14.407–6 [Amended]

14. Section 14.407–6 is amended by removing paragraph (a)(3) and redesignating (a)(4) as (a)(3).

14.502 [Amended]–

15. Section 14.502(b)(3) is amended by removing the text following the word

''business'' and inserting in its place ''or total small disadvantaged business set-aside (see 19.503–2 and 19.503–3).''

PART 15—CONTRACTING BY NEGOTIATION

15.705 [Amended]–

16. Section 15.705 is amended in paragraph (b) by removing ''business and labor surplus area'' and inserting in its place '', small disadvantaged and women-owned small business''.

15.706 [Amended]–

17. Section 15.706 is amended in paragraph (d)(4) by removing ''labor surplus area'' and inserting in its place ''women-owned small business''.

15.905–1 [Amended]

18. Section 15.905–1 is amended in the first sentence of paragraph (c) by inserting after the word ''individuals,'' the phrase ''women-owned small businesses,''; and removing the phrase ''labor surplus areas,''.

15.1001 [Amended]

19. Section 15.1001 is amended in paragraph (b)(2) by

a. inserting after the word ''small'' the first place it occurs the phrase ''or small disadvantaged'';––

b. removing the comma after ''19.5)'' and inserting the phrase ''or an award based on an evaluation preference (subpart 19.11),'' in its place; and––

c. in (b)(2)(ii) by inserting after the word ''size'' the phrase ''or small disadvantaged business''.

PART 16—TYPES OF CONTRACTS

16.103 [Amended]–

20. Section 16.103 is amended in paragraph (d)(3) by removing the words ''or labor surplus area concerns''.

16.505 [Amended]

21. Section 16.505 is amended in paragraphs (d)(4) and (d)(5)(ii) by removing the phrase ''or labor surplus area''.

PART 17—SPECIAL CONTRACTING METHODS

17.104–1 [Amended]

22. Section 17.104–1 is amended—

a. in paragraph (a) by removing the phrase ''labor surplus area'' and inserting in its place ''small disadvantaged business'';––

b. in paragraph (b) by removing the phrase ''or labor surplus area''; and––

c. in paragraph (b)(2) by removing ''(Partial labor surplus area set-asides are only authorized for DOD activities at this time.)''.

PART 19—SMALL BUSINESS PROGRAMS

23. The title of Part 19 is revised to read as set forth above.

24. Section 19.000 is amended in paragraph (a)(3) by inserting after the word ''small'' the phrase ''and small disadvantaged''; in (a)(6) by removing the word ''and''; in (a)(7) by removing the period at the end of the sentence and replacing it with ''; and''; and by adding (a)(8) to read as follows:

19.000 Scope of part.

(a) * * *

(8) The evaluation preference for small disadvantaged business concerns.

* * * * *

25. Section 19.001 is amended by—

a. adding, in alphabetical order, the definitions *Labor surplus area, Labor surplus area concern, Set-aside,* and *Women-owned small business concern;* and

b. revising the definition *Small disadvantaged business concern* to read as follows:

19.001 Definitions.

* * * * *

Labor surplus area means a geographical area identified by the Department of Labor in accordance with 20 CFR part 654, subpart A, as an area of concentrated unemployment or underemployment or an area of labor surplus.–

Labor surplus area concern means a concern that together with its first-tier subcontractors will perform substantially in labor surplus areas. Performance is substantially in labor surplus areas if the costs incurred under the contract on account of manufacturing, production, or performance of appropriate services in labor surplus areas exceed 50 percent of the contract price.

* * * * *

Set-aside means an acquisition procedure under which competition is limited exclusively to small business or small disadvantaged business concerns.

* * * * *

Small disadvantaged business concern means a small business concern that is at least 51 percent unconditionally owned by one or more individuals who are both socially and economically disadvantaged, or a publicly owned business that has at least 51 percent of its stock unconditionally owned by one or more socially and economically disadvantaged individuals and that has its management and daily business controlled by one or more such individuals. This term also means a small business concern that is at least 51 percent unconditionally owned by an economically disadvantaged Indian tribe or Native Hawaiian Organization, or a publicly owned business that has at least 51 percent of its stock unconditionally owned by one of these entities, that has its management and daily business controlled by members of an economically disadvantaged Indian tribe or Native Hawaiian Organization, and that meets the requirements of 13 CFR part 124. The definition of *small disadvantaged business concern* is different for DOD, NASA and Coast Guard; see agency regulations.

(a) *Socially disadvantaged individuals* means individuals who have been subjected to racial or ethnic prejudice or cultural bias because of their identity as a member of a group without regard to their qualities as individuals. Individuals who certify that they are members of named groups (Black Americans, Hispanic Americans, Native Americans, Asian-Pacific Americans, Subcontinent-Asian Americans) are to be considered socially and economically disadvantaged.

(1) *Subcontinent Asian Americans* means United States citizens whose origins are in India, Pakistan, Bangladesh, Sri Lanka, Bhutan, or Nepal.

(2) *Asian Pacific Americans* means United States citizens whose origins are in Japan, China, the Philippines, Vietnam, Korea, Samoa, Guam, the U.S. Trust Territory of the Pacific Islands (Republic of Palau), the Northern Mariana Islands, Laos, Kampuchea (Cambodia), Taiwan, Burma, Thailand, Malaysia, Indonesia, Singapore, Brunei, Republic of the Marshall Islands, or the Federated States of Micronesia.

(3) *Native Americans* means American Indians, Eskimos, Aleuts, and Native Hawaiians.

(b) *Economically disadvantaged individual* is defined as a socially disadvantaged individual whose ability to compete in the free enterprise system is impaired due to diminished opportunities to obtain capital and credit as compared to others in the same line of business who are not socially disadvantaged (see 13 CFR part 124).

(c) *Native Hawaiian Organization* means any community service organization serving Native Hawaiians in, and chartered as a not-for-profit organization by, the State of Hawaii, which is controlled by Native Hawaiians, and whose business activities will principally benefit such Native Hawaiians.

(d) *Indian tribe* means any Indian tribe, band, nation, or other organized group or community of Indians,

including any Alaska Native Corporation as defined in 13 CFR 124.100 which is recognized as eligible for the special programs and services provided by the U.S. to Indians because of their status as Indians, or which is recognized as such by the State in which such tribe, band, nation, group, or community resides.

Women-owned small business concern means a small business concern which is at least 51 percent owned by one or more women; or, in the case of any publicly owned business, at least 51 percent of the stock of which is owned by one or more women; and whose management and daily business operations are controlled by one or more women.

26. Section 19.102 is amended by removing paragraph (f)(3); redesignating paragraphs (f)(4) through (f)(7) as (f)(3) through (f)(6); in the first sentence of redesignated paragraph (f)(4)(i) by removing the word ''domestic''; and revising redesignated paragraph (f)(5) to read as follows:

19.102 Size standards.

* * * * *

(f) * * *–

(5) For a specific solicitation set-aside for small business under 19.503–3 or 8(a) under subpart 19.8, a contracting officer may request a waiver of that part of the nonmanufacturer rule which requires that the actual manufacturer or processor be a small business concern if no known domestic small business manufacturers or processors can reasonably be expected to offer a product meeting the requirements of the solicitation.

* * * * *–

27. Section 19.201 is amended by revising paragraphs (a), (b), (c)(9), and (d) to read as follows:

19.201 General policy.–

(a) It is the policy of the Government to place a fair proportion of its acquisitions, including contracts and subcontracts for subsystems, assemblies, components, and related services for major systems, with small business concerns, small disadvantaged business concerns, and women-owned small business concerns. Such concerns shall also have the maximum practicable opportunity to participate as subcontractors in the contracts awarded by any executive agency, consistent with efficient contract performance. The Small Business Administration (SBA) counsels and assists small business concerns and assists contracting personnel to ensure that a fair proportion of contracts for supplies and services is placed with small business.

(b) Heads of contracting activities are responsible for effectively implementing the small business programs within their activities, including achieving program goals. They are to ensure that contracting and technical personnel maintain knowledge of small, small disadvantaged and women-owned small business program requirements and take all reasonable action to increase participation in their activities' contracting processes by these businesses.

(c) * * *

(9) Make recommendations in accord with agency regulations as to whether a particular acquisition should be awarded under subpart 19.5 as a set-aside, or under subpart 19.8 as a section 8(a) award.

(d) Small Business Specialists shall be appointed and act in accord with agency regulations.

28. Section 19.202 is amended by revising the first sentence to read as follows:

19.202 Specific policies.

In order to further the policy in 19.201(a), contracting officers shall comply with the specific policies listed in this section and shall consider recommendations of the agency Director of Small and Disadvantaged Business Utilization, or the Director's designee, as to whether a particular acquisition should be awarded under subpart 19.5 or 19.8. * * *

29. Section 19.202–3 is revised to read as follows:

19.202–3 Labor Surplus Area Priority.

Priority shall be given to awarding of contracts and the placement of subcontracts to small business concerns which will perform substantially in labor surplus areas. In the event of equal low bids (see 14.407–6), awards shall be made first to small business concerns which are also labor surplus area concerns, and second to small business concerns which are not also labor surplus area concerns.

30. Section 19.202–5 is amended by revising paragraphs (a) and (b) to read as follows:

19.202–5 Data collection and reporting requirements.

* * * * *

(a) Require each prospective contractor to represent whether it is a small business, small disadvantaged business or women-owned small business (see the provision at 52.219–1, Small Business Program Representations).

(b) Accurately measure the extent of participation by small, small disadvantaged, and women-owned small businesses in Government acquisitions in terms of the total value of contracts placed during each fiscal year, and report data to the SBA at the end of each fiscal year (see subpart 4.6).–

31. Section 19.202–6 is amended by revising the introductory text and paragraph (a) to read as follows:

19.202–6 Determination of fair market price.

Agencies shall determine the fair market price of small business set-aside, small disadvantaged business set-aside, and 8(a) contracts as follows:–

(a) For total small business set-asides, total small disadvantaged business set-asides and partial small business set-aside contracts, the fair market price shall be the price achieved in accordance with the reasonable price guidelines in 15.805–2.

* * * * *–

32. Section 19.301 is amended by revising paragraphs (a), (b), (c), and the first sentence of paragraph (d) to read as follows:

19.301 Representation by the offeror.

(a) To be eligible for award as a small or a small disadvantaged business, an offeror must represent in good faith as to its status at the time of written self certification. An offeror may represent that it is a small business concern or a small disadvantaged business concern in connection with a specific solicitation if it meets the definitions applicable to the solicitation and has not been determined by the Small Business Administration (SBA) to be other than a small or small disadvantaged business.–

(b) The contracting officer shall accept an offerors representation in a specific bid or proposal that it is a small or small disadvantaged business unless (1) another offeror or interested party challenges the concern's representation or (2) the contracting officer has a reason to question the representation. Challenges of and questions concerning a specific representation shall be referred to the SBA in accordance with 19.302.

(c) An offerors representation that it is a small or small disadvantaged business is not binding on the SBA. If an offeror's status is challenged, the SBA will evaluate the status of the concern and make a determination, which will be binding on the contracting officer, as to whether the offeror is a small or small disadvantaged business. A concern cannot become eligible for a specific award by taking action to meet the definition of a small business concern or

small disadvantaged business concern after the SBA has issued its determination.

(d) If the SBA determines that the status of a concern as a ''small business'', a ''small disadvantaged business'' or a ''women-owned small business'' has been misrepresented in order to obtain a set-aside contract, an 8(a) subcontract, a subcontract that is to be included as part or all of a goal contained in a subcontracting plan, or a prime or subcontract to be awarded as a result, or in furtherance of any other provision of Federal law that specifically references section 8(d) of the Small Business Act for a definition of program eligibility, the SBA may take action as specified in section 16(d) of the Act. * * *

33. Section 19.302 is redesignated as 19.302–1; in paragraphs (d)(1), introductiry text, (f), (g)(1), and (h)(1)(ii) of newly designated 19.302–1, remove the words ''business day'' or ''business days'' and insert ''workday'' or ''workdays'' in their place; and new 19.302 heading and 19.302–2 are added to read as follows:

19.302 Protesting a small or small disadvantaged business representation.

19.302–1 Protesting a small business representation.

* * * * *

19.302–2 Protesting a small disadvantaged business representation.

Any offeror, the contracting officer, the Small Business Administration (SBA), or other interested party may protest a concern's representation of disadvantaged status.

(a) An offeror may protest a concern's representation status by filing a protest with the contracting officer. The protest must be filed within the times specified in (FAR) 48 CFR 19.302–1(d)(1) and must contain specific detailed evidence supporting the basis of protest.

(b) The contracting officer or the SBA may protest a concern's representation of disadvantaged status at any time. If a contracting officer's protest is based on information provided by a party ineligible to protest directly or ineligible to protest under the timeliness standards, the contracting officer must be persuaded by the evidence presented before adopting the grounds for protest as his or her own. The SBA protests a concern's representation of disadvantaged status by filing directly with its Office of Program Eligibility and notifying the contracting officer.

(c) The contracting officer shall return untimely protests to the protester. This includes protests filed before bid opening or notification of apparent successful offeror.

(d) Upon receipt of a timely protest, the contracting officer shall withhold award and forward the protest to the SBA Office of Program Eligibility, Office of Minority Small Business and Capitol Ownership Development, 409 3rd Street, SW., Washington, DC 20416. Send SBA

(1) The protest;

(2) The date the protest was received and a determination of timeliness;–

(3) A copy of the protested concern's self-certification of disadvantaged status; and–

(4) The date of bid opening or date on which notification of apparent successful offeror was sent to unsuccessful offerors.–

(e) Do not withhold award when the contracting officer makes a written determination that award must be made to protect the public interest.

(f) The SBA Director, Office of Program Eligibility, will determine the disadvantaged status of the challenged offeror and notify the contracting officer, the challenged offeror, and the protester. Award may be made on the basis of that determination. The determination is final for purposes of the instant acquisition, unless (1) it is appealed and (2) the contracting officer receives the appeal decision before award.–

(g) If the contracting officer does not receive an SBA determination within 15 working days after the SBA's receipt of the protest, the contracting officer shall presume that the challenged offeror is socially and economically disadvantaged. Do not use the presumption as a basis for award without first inquiring as to when a determination can be expected and waiting for the determination, unless further delay in award would be disadvantageous to the Government.–

(h) An SBA determination may be appealed by (1) The interested party whose protest has been denied; (2) The concern whose status was protested; or (3) The contracting officer. The appeal must be filed with the SBA's Associate Administrator for Minority Small Business and Capital Ownership Development within five working days after receipt of the determination. If the contracting officer receives the SBA's decision of the appeal before award, the decision shall apply to the instant acquisition. If the decision is received after award, it will apply to future acquisitions.–

34. Section 19.303 is amended by revising paragraph (a) to read as follows:

19.303 Determining product or service classifications.–

(a) The contracting officer shall determine the appropriate standard industrial classification code and related small business size standard and include them in solicitations above the micro-purchase threshold in (FAR) 48 CFR 13.106.

* * * * *

35. Section 19.304 is revised to read as follows:

19.304 Solicitation provisions and clause.–

(a) The contracting officer shall insert the provision at 52.219–1, Small Business Program Representations, in solicitations exceeding the micro-purchase threshold when the contract is to be performed inside the United States, its territories or possessions, Puerto Rico, the Trust Territory of the Pacific Islands, or the District of Columbia.

(b) The contracting officer shall insert the clause at 52.219–01, Priority for Labor Surplus Area Concerns, in solicitations and contracts that exceed the simplified acquisition threshold in part 13 when the contract is to be performed inside the United States, its territories or possessions, Puerto Rico, the Trust Territory of the Pacific Islands, or the District of Columbia.

19.401 [Amended]–

36. Section 19.401 is amended in paragraph (a) by removing the phrase ''and small disadvantaged business''.–

37. Section 19.402 is amended by revising paragraph (c)(1)(ii) to read as follows:

19.402 Small Business Administration procurement center representatives.

* * * * *

(c) * * *

(1) * * *

(ii) new qualified small, small disadvantaged and women-owned small business sources, and

* * * * *

38. Subpart 19.5 is revised to read as follows:

Subpart 19.5—Set-Asides for Small and Small Disadvantaged Businesses

Sec.

19.501 General.
19.502 Set-aside program order of precedence.
19.503 Setting aside acquisitions.
19.503–1 Requirements for setting aside acquisitions.
19.503–2 Total Small Disadvantaged Business (SDB) set-asides.
19.503–3 Total small business set-asides.
19.503–4 Partial small business set-asides.
19.503–5 Methods of conducting set-asides.

19.503–6 Insufficient causes for not setting aside an ––acquisition.
19.504 Setting aside a class of acquisitions.
19.505 Rejecting Small Business Administration ––recommendations.
19.506 Withdrawing or modifying set-asides.
19.507 Automatic dissolution of a set-aside.
19.508 Solicitation provisions and contract clauses.

§ 19.501 General.–

(a) The purpose of set-asides is to award certain acquisitions exclusively to small business or small disadvantaged business concerns. Under a ''small business set-aside'', competition is limited to small business concerns. Under a ''small disadvantaged business set-aside'', competition is limited to small disadvantaged business concerns. A small business set-aside of a single acquisition or a class of acquisitions may be total or partial.–

(b) The determination to make a set-aside may be unilateral or joint. A unilateral determination is one which is made by the contracting officer. A joint determination is one which is recommended by the Small Business Administration (SBA) procurement center representative and concurred in by the contracting officer.–

(c) The contracting officer shall review acquisitions to determine if they can be set aside, giving consideration to the recommendations of agency personnel having cognizance of the agencys small business programs and documenting why a set-aside is inappropriate when the acquisition is not set aside. If the acquisition is set aside based on this review, it is a unilateral set-aside by the contracting officer. Agencies may establish threshold levels for this review depending upon their needs. Automated contracting systems are not exempt from the requirements of this subpart.–

(d) At the request of an SBA procurement center representative, the contracting officer shall make available for review at the contracting office (to the extent of the SBA representatives security clearance) all proposed acquisitions in excess of the micro-purchase limitation in 13.106 that have not been unilaterally set aside.–

(e) To the extent practicable, unilateral determinations initiated by a contracting officer shall be used as the basis for set-asides rather than joint determinations by an SBA procurement center representative and a contracting officer.–

(f) All solicitations involving set-asides must specify the applicable small business size standard and product classification (see 19.303).–

(g) Except as authorized by law, a contract may not be awarded as a result of a set-aside if the cost to the awarding agency exceeds the fair market price.–

(h) Section 305 of Public Law 103–403 authorizes public and private organizations for the handicapped to participate for fiscal year 1995 in acquisitions set-aside for small business concerns. Status as a small business concern is not accorded a public or private organization for the handicapped for the purposes of other preferential provisions available to small business concerns; *e.g.*, eligibility for certificates of competency or higher progress payment rates.–

(1) The contracting officer shall rely on the offeror's self-certification in a specific bid or proposal that it is a public or private organization for the handicapped unless another offeror or interested party files a protest. An interested party may file a protest challenging an offeror's self-certification by forwarding the protest to the contracting officer by close of business on the fifth working day after bid opening or receipt of the 15.1001(b)(2) notice from the contracting officer of the apparently successful offeror. Upon receipt of any protest, whether timely or untimely, the contracting officer shall promptly forward the protest and its supporting documentation directly to the Associate Administrator for procurement Assistance, Small Business Administration. Upon receipt of a protest, the SBA will notify the contracting officer and the protester of the date it was received, and that the status of the public or private organization for the handicapped being challenged is under consideration by the SBA. Within 10 working days after receiving a protest, the SBA will determine the eligibility of the public or private organization for the handicapped and notify the contracting officer, the protester, and the challenged offeror of its decision by certified mail, return receipt requested. The determination of the Associate Administrator for Procurement Assistance, SBA, is final. Award will be made based on this determination. After receiving a protest involving the status of a public or private organization for the handicapped, the contracting officer shall not award the contract until (i) the SBA has made a status determination or (ii) 10 working days have expired since SBA's receipt of a protest, whichever occurs first. However, award shall not be withheld when the contracting officer determines in writing that an award must be made to protect the public interest.–

(2) Any small business offeror which experiences or is likely to experience severe economic injury as a result of award to a public or private organization for the handicapped may file an appeal of the award with the contracting officer. The appeal must be received by close of business on the tenth working day after bid opening or receipt of the 15.1001(b)(2) notice from the contracting officer of the apparently successful offeror. Upon receipt of any appeal, whether timely or untimely, or whether received before or after award, the contracting officer shall forward the appeal and supporting documentation directly to the Associate Administrator for Procurement Assistance, Small Business Administration, whose decision shall be final. The contracting officer should, when practical, withhold award until expiration of the 10-day appeal period, or; when an appeal is filed, withhold award until the contracting officer receives the SBA determination of appeal, unless delay would be disadvantageous to the Government. The SBA shall notify the contracting officer of the SBA determination and advise the agency or department to take such action as may be appropriate to alleviate economic injury sustained or likely to be sustained by the concern.

19.502 Set-aside program order of precedence.–

(a) In carrying out set-aside programs, contracting officers shall award contracts in the following order of precedence:–

(1) A total set-aside for small disadvantaged business concerns.

(2) A total set-aside for small business concerns.

(3) A partial set-aside for small business concerns.

(b) Set-aside priorities of the Department of Defense, the National Aeronautics and Space Administration, and the Coast Guard are set forth in the respective agency FAR Supplements.

19.503 Setting aside acquisitions.

19.503–1 Requirements for setting aside acquisitions.

Using the order of precedence in 19.502, the contracting officer shall set aside an individual acquisition or class of acquisitions when it is determined to be in the interest of (a) maintaining or mobilizing the Nations full productive capacity, (b) war or national defense programs, or (c) assuring that a fair proportion of Government contracts in each industry category is placed with small business concerns, and when the circumstances described in 19.503–2, 19.503–3, or 19.503–4 exist. This

requirement does not affect the responsibility of agencies to make purchases from required sources of supply such as Federal Prison Industries, Industries for People who are Blind or Severely Disabled, and multiple-award Federal Supply Schedule contracts.

19.503–2 Total Small Disadvantaged Business (SDB) set-asides.

(a) The contracting officer shall set aside any acquisition over the micro-purchase threshold for small disadvantaged business participation when there is a reasonable expectation that—

(1) Offers will be obtained from at least two responsible SDB concerns offering the products of different small disadvantaged business (but see paragraph (c) of this subsection); and

(2) Awards will be made at fair market prices unless otherwise provided by law.

(b) The contracting officer shall not set aside acquisitions for small disadvantaged business concerns when:

(1) The supply or service has been successfully acquired as a small business set aside;

(2) The acquisition is reserved for the 8(a) program;

(3) The Small Business Administration has determined that no small business manufacturer exists (see 19.102(f)(4); or

(4) As otherwise determined by the Agency Head or designee.

(c) For industries where the contracting officer finds that there are no small disadvantaged business manufacturers, the contracting officer may authorize the small disadvantaged business regular dealers to provide the product of any small business concern.

(d) The Agency head or designee is authorized to determine whether use of small disadvantaged business set-asides has caused a particular industry category to bear a disproportionate share of the contracts awarded by a particular contracting activity to achieve its small disadvantaged business goal. Upon making a determination that a particular industry is bearing a disproportionate share, the Agency Head or designee may limit the use of small disadvantaged business set-asides in the affected industry category, at the contracting activity. This limitation shall not apply to solicitations that already have been publicized as small disadvantaged business set-asides. Requests for determinations shall be forwarded through agency channels to the Agency head or designee and include—

(1) The standard industrial classification (SIC) code(s) affected;

(2) Supporting information to justify the request, including dollars and percentages by the contracting activity, under the affected SIC code(s) for the previous two fiscal years and current fiscal year to date for—

(i) Total awards;

(ii) Total awards to small businesses;

(iii) Total awards to small disadvantaged businesses; and

(iv) Awards to small disadvantaged businesses under small disadvantaged business set-asides.

(e) Small disadvantaged business set-aside requirements and procedures for DOD, NASA and Coast Guard are different and are set forth in agency supplements.

19.503–3 Total small business set-asides.

(a) Except as provided in paragraph (b), each acquisition of supplies or services that has an anticipated dollar value exceeding the micro-purchase threshold in 13.106 but not over $100,000, is automatically reserved exclusively for small business concerns and shall be set-aside. This requirement does not preclude the award of a contract with a value not greater than $100,000 under 19.8, Contracting with the Small Business Administration; 19.1006(c), emerging small business set-asides; or 19.503–2, as a small disadvantaged business set-aside.

(b) This requirement does not apply to acquisitions over $25,000 during the period when set-asides cannot be considered for the four designated industry groups (see 19.1006(b)).

(c) The contracting officer shall set aside any acquisition over $100,000 for small business participation when there is a reasonable expectation that (1) offers will be obtained from at least two responsible small business concerns offering the products of different small business concerns (but see paragraph (e) of this section); and (2) awards will be made at fair market prices. Total set-asides shall not be made unless such a reasonable expectation exists (but see 19.503–4 as to partial set-asides). Although past acquisition history of the item or similar items is always important, it is not the only factor to be considered in determining whether a reasonable expectation exists. In making R&D small business set-asides, there must also be a reasonable expectation of obtaining from small businesses the best scientific and technological sources consistent with the demands of the proposed acquisition for the best mix of cost, performances, and schedules.–

(d) Acquisitions shall not be totally set-aside for small business concerns when (1) the supply or service has been successfully acquired as a small disadvantaged business set-aside; or (2) the acquisition is reserved under the 8(a) program.

(e) In industries where the SBA finds that there are no small business manufacturers, it may waive the nonmanufacturers rule for regular dealers (see 19.102(f)(4)). This would permit small business regular dealers to provide any firm's product. In these cases, the contracting officer's determination in paragraph (c)(1) of this subsection will be based on offers from at least two responsible small business regular dealers offering the products of different concerns.

19.503–4 Partial small business set-asides.

(a) The contracting officer shall set aside a portion of an acquisition, except for construction, for exclusive small business participation when—

(1) A total small business or small disadvantaged business set-aside is not appropriate;

(2) The requirement is severable into two or more economic production runs or reasonable lots;

(3) One or more small business concerns are expected to have the technical competence and productive capacity to satisfy the set-aside portion of the requirement at a fair market price;

(4) The acquisition is not subject to simplified acquisition procedures; and

(5) A partial set-aside shall not be made if there is a reasonable expectation that only two concerns (one large and one small) with capability will respond with offers unless authorized by the head of a contracting activity on a case-by-case basis. Similarly, a class of acquisitions, not including construction, may be partially set aside. Under certain specified conditions, partial set-asides may be used in conjunction with multiyear contracting procedures.

(b) When the contracting officer determines that a portion of an acquisition is to be set aside, the requirement shall be divided into a set-aside portion and a non-set-aside portion, each of which shall (1) be an economic production run or reasonable lot and (2) have terms and a delivery schedule comparable to the other. When practicable, the set-aside portion should make maximum use of small business capacity.–

(c)(1) The contracting officer shall award the non-set-aside portion using normal contracting procedures.–

(2)(i) After all awards have been made on the non-set-aside portion, the contracting officer shall negotiate with eligible concerns on the set-aside portion, as provided in the solicitation, and make award. Negotiations shall be

conducted only with those offerors who have submitted responsive offers on the non-set-aside portion. Negotiations shall be conducted with small business concerns in the order of priority as indicated in the solicitation (but see paragraph (c)(2)(ii) of this section). The set-aside portion shall be awarded as provided in the solicitation. An offeror entitled to receive the award for quantities of an item under the non-set-aside portion and who accepts the award of additional quantities under the set-aside portion shall not be requested to accept a lower price because of the increased quantities of the award, nor shall negotiation be conducted with a view to obtaining such a lower price based solely upon receipt of award of both portions of the acquisition. This does not prevent acceptance by the contracting officer of voluntary reductions in the price from the low eligible offeror before award, acceptance of voluntary refunds, or the change of prices after award by negotiation of a contract modification.–

(ii) If equal low offers are received on the non-set-aside portion from concerns eligible for the set-aside portion, the concern that is awarded the non-set-aside part of the acquisition shall have first priority with respect to negotiations for the set-aside.

19.503–5 Methods of conducting set-asides.–

Total set-asides may be conducted by using simplified acquisition procedures (see part 13), sealed bids (see part 14), competitive proposals (see part 15), or procedures for acquisition of commercial items (see part 12). Partial small business set-asides may be conducted using sealed bids (see part 14), competitive proposals (see part 15), or procedures for acquisition of commercial items (see part 12).

19.503–6 Insufficient causes for not setting aside an acquisition.–

None of the following is, in itself, sufficient cause for not setting aside an acquisition:–

(a) A large percentage of previous contracts for the required item(s) has been placed with small business concerns.–

(b) The item is on an established planning list under the Industrial Readiness Planning Program. However, a total set-aside shall not be made when the list contains a large business Planned Emergency Producer of the item(s) who has conveyed a desire to supply some or all of the required items.–

(c) The item is on a Qualified Products List. However, a total set-aside shall not be made if the list contains the products of large businesses unless none of the large businesses desire to participate in the acquisition.–

(d) A period of less than 30 days is available for receipt of offers.–

(e) The contract is classified.–

(f) Small business concerns are already receiving a fair proportion of the agency's contracts for supplies and services.–

(g) A class set-aside of the item or service has been made by another contracting activity.–

(h) A ''brand name or equal'' product description will be used in the solicitation.

19.504 Setting aside a class of acquisitions.–

(a) A class of acquisitions of selected products or services, or a portion of the acquisitions, may be set aside for exclusive participation by small business concerns if individual acquisitions in the class will meet the criteria in 19.503–1, 19.503–3, or 19.503–4. The determination to make a class set-aside shall not depend on the existence of a current acquisition if future acquisitions can be clearly foreseen.–

(b) The determination to set aside a class of acquisitions may be either unilateral or joint.–

(c) Each class small business set-aside determination shall be in writing and must——

(1) Specifically identify the product(s) and service(s) it covers;–

(2) Provide that the set-aside does not apply to any acquisition of $100,000 or less;

(3) Provide that the set-aside applies only to the (named) contracting office(s) making the determination; –

(4) Provide that the set-aside does not apply to any individual acquisition if the requirement is not severable into two or more economic production runs or reasonable lots, in the case of a partial class set-aside; and–

(5) Provide that the procurement was not previously set aside for small disadvantaged business by the (named) contracting office(s).–

(d) The contracting officer shall review each individual acquisition arising under a class set-aside to identify any changes in the magnitude of requirements, specifications, delivery requirements, or competitive market conditions that have occurred since the initial approval of the class set-aside. If there are any changes of such a material nature as to result in probable payment of more than a fair market price by the Government or in a change in the capability of small business concerns to satisfy the requirements, the contracting officer may withdraw or modify (see 19.506(a)) the unilateral or joint set-aside by giving written notice to the SBA procurement center representative (if one is assigned), stating the reasons.

19.505 Rejecting Small Business Administration recommendations.–

(a) If the contracting officer rejects a recommendation of the SBA procurement center representative or breakout procurement center representative, written notice shall be furnished to the appropriate SBA center representative within 5 workdays of the contracting officer's receipt of the recommendation.–

(b) The SBA procurement center representative may appeal the contracting officer's rejection to the head of the contracting activity (or designee) within 2 workdays after receiving the notice. The head of the contracting activity (or designee) shall render a decision in writing, and provide it to the SBA representative within 7 workdays. Pending issuing the decision to the SBA procurement center representative, the contracting officer shall suspend action on the acquisition.–

(c) If the head of the contracting activity agrees that the contracting officer's rejection was appropriate, the SBA procurement center representative may—

(1) Within 1 workday, request the contracting officer to suspend action on the acquisition until the SBA Administrator appeals to the agency head (see paragraph (f) of this section); and–

(2) The SBA shall be allowed 15 workdays after making such a written request, within which the Administrator of SBA (i) may appeal to the Secretary of the Department concerned, and (ii) shall notify the contracting officer whether the further appeal has, in fact, been taken. If notification is not received by the contracting officer within the 15-day period, it shall be deemed that the SBA request to suspend contracting action has been withdrawn and that an appeal to the Secretary was not taken.–

(d) When the contracting officer has been notified within the 15-day period that the SBA has appealed to the agency head, the head of the contracting activity (or designee) shall forward justification for its decision to the agency head. The contracting officer shall suspend contract action until notification is received that the SBA appeal has been settled.–

(e) The agency head shall reply to the SBA within 30 workdays after receiving

the appeal. The decision of the agency head shall be final.–

(f) A request to suspend action on an acquisition need not be honored if the contracting officer determines that proceeding to contract award and performance is in the public interest. The contracting officer shall include in the contract file a statement of the facts justifying the determination, and shall promptly notify the SBA representative of the determination and provide a copy of the justification.–

(g) Procedures for rejecting SDB set-aside recommendations are different for DOD, NASA, and Coast Guard and are set forth in agency supplements.

19.506 Withdrawing or modifying set-asides.–

(a) If, before award of a contract involving a set-aside, the contracting officer considers that award would be detrimental to the public interest (*e.g.,* payment of more than a fair market price), the contracting officer may withdraw the set-aside determination whether it was unilateral or joint. The contracting officer shall initiate a withdrawal of an individual set-aside by giving written notice to the agency small business specialist and the SBA procurement center representative, if one is assigned, stating the reasons. In a similar manner, the contracting officer may modify a unilateral or joint class set-aside to withdraw one or more individual acquisitions.–

(b) If the agency small business specialist does not agree to a withdrawal or modification, the case shall be promptly referred to the SBA representative (if one is assigned) for review. If an SBA representative is not assigned, disagreements between the agency small business specialist and the contracting officer shall be resolved using agency procedures. However, the procedures are not applicable to automatic dissolutions of set-asides (see 19.507) or dissolution of set-asides under $100,000. –

(c) The contracting officer shall prepare a written statement supporting any withdrawal or modification of a set-aside and include it in the contract file.

19.507 Automatic dissolution of a set-aside.–

(a) If a set-aside acquisition or portion of an acquisition is not awarded, the unilateral or joint determination to set the acquisition aside is automatically dissolved for the unawarded portion of the set-aside. The required supplies and/or services for which no award was made may be acquired by sealed bidding or negotiation, as appropriate.–

(b) Before issuing a solicitation for the items called for in a set-aside that was dissolved, the contracting officer shall ensure that the delivery schedule is realistic in the light of all relevant factors, including the capabilities of small or small disadvantaged business concerns.

19.508 Solicitation provisions and contract clauses.–

(a)–(b) [Reserved] –

(c) The contracting officer shall insert the clause at 52.219–6, Notice of Total Small Business Set-Aside, in solicitations and contracts involving total small business set-asides (see 19.503–3). The clause at 52.219–6 with its Alternate I will be used when the acquisition is for a product in a class for which the Small Business Administration has determined that there are not small business manufacturers in the Federal market in accordance with 19.503–3(e).–

(d) The contracting officer shall insert the clause at 52.219–7, Notice of Partial Small Business Set-Aside, in solicitations and contracts involving partial small business set-asides (see 19.503–4). The clause at 52.219–7 with its Alternate I will be used when the acquisition is for a product in a class for which the Small Business Administration has determined that there are not small business manufacturers in the Federal market in accordance with 19.503–3(e).–

(e) The contracting officer shall insert the clause at 52.219–14, Limitations on Subcontracting, in solicitations and contracts expected to exceed $100,000 for supplies, services, and construction, if any portion of the requirement is to be set aside for small or small disadvantaged business, or if the contract is to be awarded under subpart 19.8.–

(f) The contracting officer shall insert the clause at 52.219–15, Notice of Participation by Organizations for the Handicapped, in solicitations and contracts issued through September 30, 1995, involving total or partial small business set-asides.–

(g) The contracting officer shall insert the clause at 52.219–00, Notice of Total Small Disadvantaged Business Set-Aside, in solicitations and contracts involving total small disadvantaged business set-asides (see 19.503–2). The clause at 52.219–00 with its Alternate I will be used when the acquisition is for a product in a class for which the contracting officer has determined that there are not small disadvantaged business manufacturers or processors in accordance with 19.503–2(c).

Subpart 19.7—Subcontracting With Small Business, Small Disadvantaged Business and Women-Owned Small Business Concerns

39. The title of Subpart 19.7 is revised to read as set forth above.–

40. Section 19.702 is amended by revising the introductory text and paragraph (b)(4) to read as follows:

19.702 Statutory requirements.–

Any contractor receiving a contract for more than the simplified acquisition threshold in 13.000 shall agree in the contract that small business concerns, small disadvantaged business concerns and women-owned small business concerns shall have the maximum practicable opportunity to participate in contract performance consistent with its efficient performance. It is further the policy of the United States that its prime contractors establish procedures to ensure the timely payment of amounts due pursuant to the terms of their subcontracts with small business concerns, small disadvantaged business concerns and women-owned small business concerns.

* * * * *

(b) * * *

(4) For modifications to contracts that do not contain the clause at 52.219–8, Utilization of Small, Small Disadvantaged and Women-Owned Small Business Concerns (or equivalent prior clauses).

* * * * *

41. Section 19.703 is amended by revising paragraph (a) introductory text, (a)(1), and (b) to read as follows:

19.703 Eligibility requirements for participating in the program.

(a) To be eligible as a subcontractor under the program, a concern must represent itself as a small business concern, small disadvantaged business concern or a woman-owned small business concern.

(1) To represent itself as a small business concern or a women-owned small business concern, a concern must meet the appropriate definition in 19.001.

* * * * *

(b) A contractor acting in good faith may rely on the written representation of its subcontractor regarding the subcontractor's status. The contractor, the contracting officer, or any other interested party can challenge a subcontractor's size status representation by filing a protest, in accordance with 13 CFR 121.1601 through 121.1608. Protests challenging a subcontractor's disadvantaged status representation shall be filed in

accordance with 13 CFR 124.601 through 124.610. Protests challenging a subcontractor's status as a women-owned small business concern shall be filed in accordance with Small Business Administration procedures.

42. Section 19.704 is amended by revising paragraphs (a)(1), (a)(3), (a)(4), (a)(6), and (b) to read as follows:

19.704 Subcontracting plan requirements.

(a) * * *

(1) Separate percentage goals for using small business concerns, small disadvantaged business concerns and women-owned small business concerns as subcontractors;

* * * * *

(3) A description of the efforts the offeror will make to ensure that small business concerns, small disadvantaged business concerns and women-owned small business concerns will have an equitable opportunity to compete for subcontracts;

(4) Assurances that the offeror will include the clause at 52.219–8, Utilization of Small, Small Disadvantaged and Women-owned Small Business Concerns (see 19.708(b)), in all subcontracts that offer further subcontracting opportunities, and that the offeror will require all subcontractors (except small business concerns) that receive subcontracts in excess of $500,000 ($1,000,000 for construction) to adopt a plan similar to the plan required by the clause at 52.219–9, Small, Small Disadvantaged and Women-Owned Small Business Subcontracting Plan (see 19.708(c));

* * * * *

(6) A recitation of the types of records the offeror will maintain to demonstrate procedures adopted to comply with the requirements and goals in the plan, including establishing source lists; and a description of the offeror's efforts to locate small, small disadvantaged and women-owned small business concerns and to award subcontracts to them.

(b) Contractors may establish, on a plant or division wide basis, a master subcontracting plan which contains all the elements required by the clause at 52.219–9, Small, Small Disadvantaged and Women-Owned Small Business Subcontracting Plan, except goals. Master plans shall be effective for a 1-year period after approval by the contracting officer; however, a master plan when incorporated in an individual plan shall apply to that contract throughout the life of the contract.

* * * * *

19.705–1 [Amended].

43. Section 19.705–1 is amended in the first sentence by removing the phrase ''for Small and Small Disadvantaged Business Concerns''.

44. Section 19.705–4 is amended by revising the last sentences of paragraphs (b) and (c); the first sentence of paragraphs (d)(1) and (d)(5); and revising (d)(4) to read as follows:

19.705–4 Reviewing the subcontracting plan.

* * * * *

(b) * * * If the plan, although responsive, evidences the bidder's intention not to comply with its obligations under the clause at 52.219–8, Utilization of Small, Small Disadvantaged and Women-owned Small Business Concerns, the contracting officer may find the bidder nonresponsible.

(c) * * * An incentive subcontracting clause (see 52.219–10, Incentive Subcontracting Program), may be used when additional and unique contract effort, such as providing technical assistance, could significantly increase subcontract awards to small, small disadvantaged or women-owned small businesses.

(d) * * * (1) Evaluate the offeror's past performance in awarding subcontracts for the same or similar products or services to small, small disadvantaged and women-owned small business concerns. * * *

* * * * *

(4) Evaluate subcontracting potential, considering the offeror's make-or-buy policies or programs, the nature of the products or services to be subcontracted, the known availability of small, small disadvantaged and women-owned small business concerns in the geographical area where the work will be performed, and the potential contractor's long-standing contractual relationship with its suppliers.

(5) Advise the offeror of available sources of information on potential small, small disadvantaged and women-owned small business subcontractors, as well as any specific concerns known to be potential subcontractors. * * *

* * * * *

19.705–7 [Amended].

45. Section 19.705–7 is amended—

a. in the first sentence of paragraph (a) by removing the word ''and'' the first time it is used and replacing it with a comma; and adding the phrase ''and women-owned small'' after the word ''disadvantaged'';

b. in the third sentence of paragraph (d) by removing the words ''business and'' and replacing them with a comma; and adding the phrase ''and women-owned small'' after the word ''disadvantaged'';

c. in paragraph (f) by removing the words ''Business and'' and replacing them with a comma; and adding the phrase ''and Women-Owned Small'' after the word ''Disadvantaged''.

46. Section 19.706 is amended by revising paragraphs (a)(2) and (a)(3) to read as follows:

19.706 Responsibilities of the cognizant administrative contracting officer.

(a) * * *

(2) Information on the extent to which the contractor is meeting the plan's goals for subcontracting with eligible small, small disadvantaged and women-owned small business concerns;

(3) Information on whether the contractor's efforts to ensure the participation of small, small disadvantaged and women-owned small business concerns are in accordance with its subcontracting plan;

* * * * *

47. Section 19.708 is amended by revising paragraph (a) introductory text, (b) and (c) to read as follows:

19.708 Solicitation provisions and contract clauses.

(a) The contracting officer shall insert the clause at 52.219–8, Utilization of Small, Small Disadvantaged and Women-Owned Small Business Concerns, in solicitations and contracts when the contract amount is expected to be over the simplified acquisition threshold in 13.000 unless—

* * * * *

(b)(1) The contracting officer shall, when contracting by negotiation, insert the clause at 52.219–9, Small, Small Disadvantaged and Women-Owned Small Business Subcontracting Plan, in solicitations and contracts that (i) offer subcontracting possibilities, (ii) are expected to exceed $500,000 ($1,000,000 for construction of any public facility), and (iii) are required to include the clause at 52.219–8, Utilization of Small, Small Disadvantaged and Women-Owned Small Business Concerns, unless the acquisition has been set-aside or is to be accomplished under the 8(a) program. When contracting by sealed bidding rather than by negotiation, the contracting officer shall use the clause with its Alternate I.

(2) The contracting officer shall insert the clause at 52.219–16, Liquidated Damages—Subcontracting Plan, in all solicitations and contracts containing the clause at 52.219-9, Small, Small Disadvantaged and Women-Owned

Small Business Subcontracting Plan, or its Alternate I.–

(c)(1) The contracting officer may, when contracting by negotiation, insert in solicitations and contracts a clause substantially the same as the clause at 52.219–10, Incentive Subcontracting Program, when a subcontracting plan is required (see 19.702(a)(1)), and inclusion of a monetary incentive is, in the judgment of the contracting officer, necessary to increase subcontracting opportunities for small, small disadvantaged and women-owned small business concerns, and is commensurate with the efficient and economical performance of the contract; unless the conditions in paragraph (c)(3) of this section are applicable. The contracting officer may vary the terms of the clause as specified in paragraph (c)(2) of this section.

(2) Various approaches may be used in the development of small, small disadvantaged and women-owned small business concerns' subcontracting incentives. They can take many forms, from a fully quantified schedule of payments based on actual subcontract achievement to an award-fee approach employing subjective evaluation criteria (see paragraph (c)(3) of this section). The incentive should not reward the contractor for results other than those that are attributable to the contractor's efforts under the incentive subcontracting program.

(3) As specified in paragraph (c)(2) of this section, the contracting officer may include small, small disadvantaged and women-owned small business subcontracting as one of the factors to be considered in determining the award-fee in a cost-plus-award-fee contract; in such cases, however, the contracting officer shall not use the clause at 52.219–10, Incentive Subcontracting Program.

Subpart 19.9—[Removed and Reserved]

48. Subpart 19.9, consisting of sections 19.901 and 19.902, is removed and reserved.

49. Section 19.1006 is amended by revising paragraph (b)(1); in paragraph (c)(1)(i) by removing ''13.105 or''; and in paragraph (c)(3) by removing ''small purchase'' and inserting in its place ''simplified acquisition''. The revised text reads as follows:

19.1006 Procedures.

* * * * *

(b) * * *

(1) Solicitations for acquisitions in any of the four designated industry groups issued from January 1, 1989, through September 30, 1996, that have an anticipated dollar value greater than $25,000 shall not be considered for small business set-asides under subpart 19.503–3 or 19.503–4 (however, see paragraphs (b)(2) and (c)(1) of this section). Acquisitions in the designated industry groups shall continue to be considered for placement under the 8(a) program (see subpart 19.8) or as small disadvantaged business set-asides (see 19.503–2). During the period when set-asides cannot be considered for acquisitions in the four designated industry groups, the evaluation preference at 19.11 shall not be used.

* * * * *

50. Subpart 19.11 is added to read as follows:

Subpart 19.11—Evaluation Preference for Small Disadvantaged Business Concerns

Sec.
19.1100 Policy.
19.1101 Applicability.
19.1102 Procedures.
19.1103 Contract clause.

19.1100 Policy.

Offers from small disadvantaged business concerns shall be given an evaluation preference in accordance with this subpart. Evaluation preference for small disadvantaged business concerns is different for DOD, NASA and Coast Guard, see agency supplements.

19.1101 Applicability.

The evaluation preference shall be used in unrestricted, competitive acquisitions where award is based on price and price-related factors. The preference may be used at the discretion of the source selection authority in other competitive acquisitions. Do not use the evaluation preference in acquisitions which are set-aside under subpart 19.5.

19.1102 Procedures.

(a) Give offers from small disadvantaged business concerns a preference in evaluation by adding a factor of 10 percent (or a different percentage not exceeding 10 percent, if required by agency regulations) to the price of all offers, except—

(1) Offers from small disadvantaged business concerns which have not waived the evaluation preference;

(2) Otherwise successful offers of eligible products under the Trade Agreements Act when the acquisition equals or exceeds the dollar threshold in (FAR) 48 CFR 25.402; or

(3) Offers where application of the factor would be inconsistent with a Memorandum of Understanding or other international agreement with a foreign government.

(b) Apply the factor on a line item by line item basis or apply it to any group on which award may be made. Add other evaluation factors such as transportation costs or rent-free use of Government facilities to the offers before applying the 10 percent factor.

(c) Do not evaluate offers using the preference when it would cause award to be made at a price which exceeds fair market price by more than 10 percent.

19.1103 Contract clause.

–Use the clause at 52.219.02, Notice of Evaluation Preference for Small Disadvantaged Business Concerns, in solicitations and contracts involving unrestricted, competitive acquisitions where award is based on price and price related factors. Use the clause with its Alternate I when the contracting officer determines that there are not small disadvantaged business manufacturers that can meet the requirements of the solicitation.

PART 20—[RESERVED]

51. Part 20 is removed and reserved.

PART 25—FOREIGN ACQUISITION

25.105 [Amended]

52. Section 25.105 is amended in paragraph (a)(1) by removing the phrase ''that is not a labor surplus area concern''; and in paragraph (a)(2) by removing the phrase ''or any labor surplus area concern''.

25.404 [Reserved]

53. Section 25.404 is removed and reserved.

25.1002 [Amended]

54. Section 25.1002 is amended in paragraph (b)(2) by removing the text following the word ''small'' and inserting in its place ''or small disadvantaged business set asides under 19.503–2 and 19.503–3.''

PART 26—OTHER SOCIOECONOMIC PROGRAMS

26.104 [Amended]

55. Section 26.104 is amended in paragraphs (a) and (b) by removing ''Business and'' and inserting a comma in its place; and inserting after the word ''Disadvantaged'' the phrase ''and Women-Owned Small''.

PART 42—CONTRACT ADMINISTRATION

56. Section 42.302 is amended by revising paragraphs (a)(52) through (a)(55) to read as follows:

42.302 Contract administration functions.

* * * * *

(a) * * *

(52) Review, evaluate, and approve plant or division-wide small, small disadvantaged and women-owned small business master subcontracting plans.

(53) Obtain the contractor's currently approved company- or division-wide plans for small, small disadvantaged and women-owned small business subcontracting for its commercial products, or, if there is no currently approved plan, assist the contracting officer in evaluating the plans for those products.

(54) Assist the contracting officer, upon request, in evaluating an offeror's proposed small, small disadvantaged and women-owned small business subcontracting plans, including documentation of compliance with similar plans under prior contracts.

(55) By periodic surveillance, ensure the contractor's compliance with small, small disadvantaged and women-owned small business subcontracting plans and any labor surplus area contractual requirements; maintain documentation of the contractor's performance under and compliance with these plans and requirements; and provide advice and assistance to the firms involved, as appropriate.

* * * * *

42.501 [Amended]

57. Section 42.501 is amended in paragraph (b) by removing the word ''and'' and inserting a comma in its place; and inserting after the word ''disadvantaged'' the phrase ''and women-owned small''.

58. Section 42.502 is amended by revising paragraphs (i) and (j) to read as follows:

42.502 Selecting contracts for postaward orientation.

* * * * *

(i) Contractor's status, if any, as a small business, small disadvantaged or women-owned small business concern;

(j) Contractor's performance history with small, small disadvantaged and women-owned small business subcontracting programs;

* * * * *

PART 44—SUBCONTRACTING POLICIES AND PROCEDURES

44.202–2 [Amended]

59. Section 44.202–2 is amended in paragraph (a)(4) by removing the phrase ''labor surplus area or''; removing the words ''business concerns and'' and inserting a comma in its place; and inserting after the word ''disadvantaged'' the phrase ''and women-owned small''.

44.303 [Amended]

59. Section 44.303 is amended in paragraph (e) by removing the phrase ''labor surplus area concerns and''; and inserting after the word ''disadvantaged'' the phrase ''and women-owned small''.

PART 52—SOLICITATION PROVISIONS AND CONTRACT CLAUSES

60. Section 52.204–00 is added to read as follows:

52.204–00 Women-Owned Business.

As prescribed in 4.603, insert the following provision:

Women-Owned Business (Date)

(a) *Representation.* The offeror represents that it ☐ is, ☐ is not a women-owned business concern.

(b) *Definition.* ''Women-owned business concern,'' as used in this provision, means a concern which is at least 51 percent owned by one or more women; or in the case of any publicly owned business, at least 51 percent of the stock of which is owned by one or more women; and whose management and daily business operations are controlled by one or more women.

52.216–21 [Amended]

61. Section 52.216–21 is amended in the introductory text of Alternates III and IV by removing the phrase ''or labor surplus area''.

62. Section 52.219–1 is revised to read as follows:

52.219–1 Small Business Program Representations.

As prescribed in 19.304(a), insert the following provision:

Small Business Program Representations (Date)

–(a)(1) The standard industrial classification (SIC) code for this acquisition is _____ (*insert SIC code*).

(2) The small business size standard is _____ (insert size standard).

(3) The small business size standard for a concern which submits an offer in its own name, other than on a construction or service contract, but which proposes to furnish a product which it did not itself manufacture, is 500 employees.

(b) *Representations.* (1) The offeror represents and certifies as part of its offer that it ☐ is, ☐ is not a small business concern.

(2) The offeror represents and certifies as part of its offer that it ☐ is, ☐ is not a small disadvantaged business concern.

(3) The offeror represents as part of its offer that it ☐ is, ☐ is not a women-owned small business concern.

(c) *Definitions. Small business concern,* as used in this provision, means a concern, including its affiliates, that is independently owned and operated, not dominant in the field of operation in which it is bidding on Government contracts, and qualified as a small business under the criteria in 13 CFR part 121 and size standard above.

Small disadvantaged business concern, as used in this provision, means a small business concern that (1) is at least 51 percent unconditionally owned by one or more individuals who are both socially and economically disadvantaged, or a publicly owned business having at least 51 percent of its stock unconditionally owned by one or more socially and economically disadvantaged individuals and (2) has its management and daily business controlled by one or more such individuals. This term also means a small business concern that is at least 51 percent unconditionally owned by an economically disadvantaged Indian tribe or Native Hawaiian Organization, or a publicly owned business having at least 51 percent of its stock unconditionally owned by one or more of these entities which has its management and daily business controlled by members of an economically disadvantaged Indian tribe or Native Hawaiian Organization, and which meets the requirements of 13 CFR part 124.

Women-owned small business concern, as used in this provision, means a small business concern at least 51 percent owned by a woman or women or, in the case of any publicly owned business, at least 51 percent of the stock is owned by one or more women; and whose management and daily business operations are controlled by one or more women.

(d) *Notice.* Under 15 U.S.C. 645(d), any person who misrepresents a firm's status as a small or small disadvantaged business concern in order to obtain a contract to be awarded under the preference programs established pursuant to sections 8(a), 8(d), 9, or 15 of the Small Business Act or any other provision of Federal law that specifically references section 8(d) for a definition of program eligibility, shall—

(1) Be punished by imposition of fine, imprisonment, or both;

(2) Be subject to administrative remedies, including suspension and debarment; and

(3) Be ineligible for participation in programs conducted under the authority of the Act.

(End of provision)

52.219–2 thru 52.219–5 [Reserved]

63. Sections 52.219–2 through 52.219–5 are removed and reserved.–

64. Section 52.219–6 is amended by revising Alternate I to read as follows:

52.219–6 Notice of Total Small Business Set-Aside.

* * * * *_

Alternate I (DATE). When the acquisition is for a product in a class for which the Small Business Administration has determined that there are no small business manufacturers or processors in the Federal market in accordance with 19.503–3(e), delete paragraph (c).

65. Section 52.219–7 is amended by revising the date of the clause; in paragraph (a) by removing the definitions *Labor surplus area, Labor surplus area concern,* and *Perform substantially in labor surplus areas;* and

by revising paragraphs (b)(4) and (c) and Alternate I to read as follows:

52.219–7 Notice of Partial Small Business Set-Aside.

* * * * *

Notice of Partial Small Business Set-Aside (Date)

* * * * *

(b) * * *

(4) The contractor(s) for the set-aside portion will be selected from among the small business concerns that submitted responsive offers on the non-set-aside portion. Negotiations will be conducted with the concern that submitted the lowest responsive offer on the non-set-aside portion. If the negotiations are not successful or if only part of the set-aside portion is awarded to that concern, negotiations will be conducted with the concern that submitted the second-lowest responsive offer on the non-set-aside portion. This process will continue until a contract or contracts are awarded for the entire set-aside portion.

* * * * *

(c) *Agreement.* For the set-aside portion of the acquisition, a manufacturer or regular dealer submitting an offer in its own name agrees to furnish, in performing the contract, only end items manufactured or produced by small business concerns inside the United States, its territories and possessions, the Commonwealth of Puerto Rico, the Trust Territory of the Pacific Islands, or the District of Columbia. However, this requirement does not apply in connection with construction or service contracts.

(End of clause)

Alternate I (DATE). When the acquisition is for a product in a class for which the Small Business Administration has determined that there are no small business manufacturers or processors in the Federal market in accordance with 19.503–3(e), delete paragraph (c).–

66. Section 52.219–8 is amended by revising the section heading; the clause title and date; paragraph (a); redesignating paragraph (d) as (e) and revising it; and adding a new paragraph (d) to read as follows:

52.219–8 Utilization of Small, Small Disadvantaged and Women-Owned Small Business Concerns.

* * * * *

Utilization of Small, Small Disadvantaged and Women-Owned Small Business Concerns (Date)

(a) It is the policy of the United States that small business concerns, small business concerns owned and controlled by socially and economically disadvantaged individuals and small business concerns owned and controlled by women shall have the maximum practicable opportunity to participate in performing contracts let by any Federal agency, including contracts and subcontracts for subsystems, assemblies, components, and related services for major systems. It is further the policy of the United States that its prime contractors establish procedures to ensure the timely payment of amounts due pursuant to the terms of their subcontracts with small business concerns, small business concerns owned and controlled by socially and economically disadvantaged individuals and small business concerns owned and controlled by women.

* * * * *

(d) The term ''small business concern owned and controlled by women'' shall mean a small business concern (i) which is at least 51 percent owned by one or more women, or, in the case of any publicly owned business, at least 51 percent of the stock of which is owned by one or more women, and (ii) whose management and daily business operations are controlled by one or more women, and;

(e) Contractors acting in good faith may rely on written representations by their subcontractors regarding their status as a small business concern, a small business concern owned and controlled by socially and economically disadvantaged individuals or a small business concern owned and controlled by women.

(End of clause)

67. Section 52.219–9 is amended by revising—

a. The section heading;

b. The clause title and date;

c. The first sentence of paragraph (c);

d. Paragraphs (d), (e), (i), and Alternate I to read as follows:

52.219–9 Small, Small Disadvantaged and Women-Owned Small Business Subcontracting Plan.

* * * * *

Small, Small Disadvantaged and Women-Owned Small Business Subcontracting Plan (Date)

* * * * *

(c) The offeror, upon request by the Contracting Officer, shall submit and negotiate a subcontracting plan, where applicable, which separately addresses subcontracting with small business concerns, with small disadvantaged business concerns and with women-owned small business concerns. * * *

(d) The offeror's subcontracting plan shall include the following:–

(1) Goals, expressed in terms of percentages of total planned subcontracting dollars, for the use of small business concerns, small disadvantaged business concerns and women-owned small business concerns as subcontractors. The offeror shall include all subcontracts that contribute to contract performance, and may include a proportionate share of products and services that are normally allocated as indirect costs.–

(2) A statement of—

(i) Total dollars planned to be subcontracted;

(ii) Total dollars planned to be subcontracted to small business concerns;

(iii) Total dollars planned to be subcontracted to small disadvantaged business concerns; and

(iv) Total dollars planned to be subcontracted to women-owned small business concerns;

(3) A description of the principal types of supplies and services to be subcontracted, and an identification of the types planned for subcontracting to (i) small business concerns, (ii) small disadvantaged business concerns and (iii) women-owned small business concerns.

(4) A description of the method used to develop the subcontracting goals in (1) above.

(5) A description of the method used to identify potential sources for solicitation purposes (*e.g.*, existing company source lists, the Procurement Automated Source System (PASS) of the Small Business Administration, the National Minority Purchasing Council Vendor Information Service, the Research and Information Division of the Minority Business Development Agency in the Department of Commerce, or small, small disadvantaged and women-owned small business concerns trade associations).–

(6) A statement as to whether or not the offeror included indirect costs in establishing subcontracting goals, and a description of the method used to determine the proportionate share of indirect costs to be incurred with (i) small business concerns, (ii) small disadvantaged business concerns and (iii) women-owned small business concerns.

(7) The name of the individual employed by the offeror who will administer the offerors subcontracting program, and a description of the duties of the individual.

(8) A description of the efforts the offeror will make to assure that small, small disadvantaged and women-owned small business concerns have an equitable opportunity to compete for subcontracts.

(9) Assurances that the offeror will include the clause in this contract entitled ''Utilization Of Small, Small Disadvantaged And Women-Owned Small Business Concerns in all subcontracts that offer further subcontracting opportunities, and that the offeror will require all subcontractors (except small business concerns) who receive subcontracts in excess of $500,000 ($1,000,000 for construction of any public facility), to adopt a plan similar to the plan agreed to by the offeror.

(10) Assurances that the offeror will (i) cooperate in any studies or surveys as may be required, (ii) submit periodic reports in order to allow the Government to determine the extent of compliance by the offeror with the subcontracting plan, (iii) submit Standard Form (SF) 294, Subcontracting Report for Individual Contracts, and/or SF 295, Summary Subcontract Report, in accordance with the instructions on the forms, and (iv) ensure that its subcontractors agree to submit Standard Forms 294 and 295.

(11) A recitation of the types of records the offeror will maintain to demonstrate procedures that have been adopted to comply with the requirements and goals in the plan, including establishing source lists; and a description of its efforts to locate small, small disadvantaged and women-owned small business concerns and award subcontracts to them. The records shall include at least the following (on a plant-wide or company-wide basis, unless otherwise indicated):

(i) Source lists, guides, and other data that identify small, small disadvantaged and women-owned small business concerns.

(ii) Organizations contacted in an attempt to locate sources that are small, small disadvantaged or women-owned small business concerns.

(iii) Records on each subcontract solicitation resulting in an award of more than $100,000, indicating (A) whether small business concerns were solicited and if not, why not, (B) whether small disadvantaged business concerns were solicited and if not, why not, (C) whether women-owned small business concerns were solicited and if not, why not, and (D) if applicable, the reason award was not made to a small business concern.

(iv) Records of any outreach efforts to contact (A) trade associations, (B) business development organizations, and (C) conferences and trade fairs to locate small, small disadvantaged and women-owned small business sources.

(v) Records of internal guidance and encouragement provided to buyers through (A) workshops, seminars, training, etc., and (B) monitoring performance to evaluate compliance with the program's requirements.

(vi) On a contract-by-contract basis, records to support award data submitted by the offeror to the Government, including the name, address, and business size of each subcontractor. Contractors having company or division-wide annual plans need not comply with this requirement.

(e) In order to effectively implement this plan to the extent consistent with efficient contract performance, the Contractor shall perform the following functions:

(1) Assist small, small disadvantaged and women-owned small business concerns by arranging solicitations, time for the preparation of bids, quantities, specifications, and delivery schedules so as to facilitate the participation by such concerns. Where the Contractors lists of potential small, small disadvantaged and women-owned small business subcontractors are excessively long, reasonable effort shall be made to give all such small business concerns an opportunity to compete over a period of time.

(2) Provide adequate and timely consideration of the potentialities of small, small disadvantaged and women-owned small business concerns in all ''make-or-buy'' decisions.

(3) Counsel and discuss subcontracting opportunities with representatives of small, small disadvantaged and women-owned small business firms.

(4) Provide notice to subcontractors concerning penalties and remedies for misrepresentations of business status as small, small disadvantaged or women-owned small business for the purpose of obtaining a subcontract that is to be included as part or all of a goal contained in the Contractor's subcontracting plan.

* * * * *

(i) The failure of the Contractor or subcontractor to comply in good faith with (1) the clause of this contract entitled ''Utilization Of Small, Small Disadvantaged And Women-Owned Small Business Concerns,'' or (2) an approved plan required by this clause, shall be a material breach of the contract.

(End of clause)

Alternate I (DATE). When contracting by sealed bidding rather than by negotiation, substitute the following paragraph (c) for paragraph (c) of the basic clause:

(c) The apparent low bidder, upon request by the Contracting Officer, shall submit a subcontracting plan, where applicable, which separately addresses subcontracting with small business concerns, with small disadvantaged business concerns and with women-owned small business concerns. If the bidder is submitting an individual contract plan, the plan must separately address subcontracting with small business concerns, with small disadvantaged business concerns and with women-owned small business concerns with a separate part for the basic contract and separate parts for each option (if any). The plan shall be included in and made a part of the resultant contract. The subcontracting plan shall be submitted within the time specified by the Contracting Officer. Failure to submit the subcontracting plan shall make the bidder ineligible for the award of a contract.

52.219–10 [Amended]

68. Section 52.219–10 is amended in—

a. The section heading and clause title by removing ''for Small and Small Disadvantaged Business Concerns'' and revising the date;

b. The introductory text of the clause by removing the text following ''19.708(c)(1),'' and inserting in its place ''insert the following clause:''; and

c. Paragraph (a) of the clause by removing the word ''and'', inserting a comma in its place, and removing the period at the end of the sentence and inserting in its place ''and a certain percentage to women-owned small business concerns.''

52.219–13 [Reserved]

69. Section 52.219–13 is removed and reserved.

70. Section 52.219–16 is amended by revising the section heading, clause title and date; paragraph (a); the first sentence of paragraph (b); and paragraphs (d) and (f) to read as follows:

52.219–16 Liquidated Damages—Subcontracting Plan.

* * * * *

Liquidated Damages—Subcontracting Plan (Date)

(a) *Failure to make a good faith effort to comply with the subcontracting plan,* as used in this clause, means a willful or intentional failure to perform in accordance with the requirements of the subcontracting plan approved under the clause in this contract entitled ''Small, Small Disadvantaged and Women-Owned Small Business Subcontracting Plan,'' or willful or intentional action to frustrate the plan.

(b) If, at contract completion, or in the case of a commercial products plan, at the close of the fiscal year for which the plan is applicable, the Contractor has failed to meet its subcontracting goals and the Contracting Officer decides in accordance with paragraph (c) of this clause that the Contractor failed to make a good faith effort to comply with its subcontracting plan, established in accordance with the clause in this contract entitled Small, Small Disadvantaged and Women-Owned Small Business Subcontracting Plan, the Contractor shall pay the Government liquidated damages in an amount stated. * * *

* * * * *

(d) With respect to commercial products plans; *i.e.,* company-wide or division-wide subcontracting plans approved under paragraph (g) of the clause in this contract entitled, Small, Small Disadvantaged and Women-Owned Small Business Subcontracting Plan, the Contracting Officer of the agency that originally approved the plan will exercise the functions of the Contracting Officer under this clause on behalf of all agencies that awarded contracts covered by that commercial products plan.

* * * * *

(f) Liquidated damages shall be in addition to any other remedies that the Government may have.

(End of clause)

52.219–22 [Reserved]

71. Section 52.219–22 is removed and reserved.

72. Section 52.219–00 is added to read as follows:

52.219–00 Notice of Total Small Disadvantaged Business Set-Aside.

As prescribed in 19.508(g), insert the following clause in solicitations and contracts:

Notice of Total Small Disadvantaged Business Set-Aside (Date)

(a) *Definition—Small disadvantaged business concern,* as used in this clause, means a small business concern that (a) is at least 51 percent unconditionally owned by one or more individuals who are both socially and economically disadvantaged, or a publicly owned business having at least 51 percent of its stock unconditionally owned by one or more socially and economically disadvantaged individuals and (b) has its management and daily business controlled by one or more such individuals. This term also means a small business concern that is at least 51 percent unconditionally owned by an economically disadvantaged Indian tribe or Native Hawaiian Organization, or a publicly owned business having at least 51 percent of its stock unconditionally owned by one of these entities which has its management and daily business controlled by members of an economically disadvantaged Indian tribe or Native Hawaiian Organization, and which meets the requirements of 13 CFR part 124.

(b) *General*—(1) Offers are solicited only from small disadvantaged business concerns. Offers received from concerns that are not

small disadvantaged business concerns shall be considered nonresponsive and will be rejected.

(2) Any award resulting from this solicitation will be made to a small disadvantaged business concern.

(c) *Agreement.* A manufacturer or regular dealer submitting an offer in its own name agrees to furnish, in performing the contract, only end items manufactured or produced by small disadvantaged business concerns inside the United States, its territories and possessions, the Commonwealth of Puerto Rico, the Trust Territory of the Pacific Islands, or the District of Columbia. However, this requirement does not apply in connection with construction or service contracts.

(End of clause)

Alternate I (Date). When the acquisition is for a product in a class for which the contracting officer has determined that there are no small disadvantaged business manufacturers or processors in accordance with 19.503–2(c), substitute the following paragraph (c) for paragraph (c) of the basic clause:

(c) *Agreement.* A manufacturer or regular dealer submitting an offer in its own name agrees to furnish, in performing the contract, only end items manufactured or produced by small business concerns inside the United States, its territories and possessions, the Commonwealth of Puerto Rico, the Trust Territory of the Pacific Islands, or the District of Columbia. However, this requirement does not apply in connection with construction or service contracts.

73. Section 52.220–1 is redesignated as 52.219–01 and revised to read as follows:

52.219–01 Priority for Labor Surplus Area Concerns.

As prescribed in 19.304(b), insert the following provision:

Priority for Labor Surplus Area Concerns (Date)

(a) The offeror's status as a labor surplus area concern may affect entitlement to award in case of tie offers. In order to determine whether the offeror is entitled to a priority, the offeror must identify, below, the LSA in which the costs to be incurred on account of manufacturing or production (by the offeror or the first-tier subcontractors) amount to more than 50 percent of the contract price.

(b) Failure to identify the labor surplus areas as specified above will preclude the offeror from receiving priority consideration. If the offeror is awarded a contract as a result of receiving priority consideration under this clause and would not have otherwise qualified for award, the offeror shall perform the contract or cause the contract to be performed in accordance with the obligations of an LSA concern.

(End of provision)

74. Section 52.219–02 is added to read as follows:

52.219–02 Notice of Evaluation Preference for Small Disadvantaged Business Concerns.

As prescribed in 19.1103, insert the following clause:

Notice of Evaluation Preference for Small Disadvantaged Business Concerns (Date)

(a) *Definition—Small disadvantaged business concern,* as used in this clause, means a small business concern that (a) is at least 51 percent unconditionally owned by one or more individuals who are both socially and economically disadvantaged, or a publicly owned business having at least 51 percent of its stock unconditionally owned by one or more socially and economically disadvantaged individuals and (b) has its management and daily business controlled by one or more such individuals. This term also means a small business concern that is at least 51 percent unconditionally owned by an economically disadvantaged Indian tribe or Native Hawaiian Organization, or a publicly owned business having at least 51 percent of its stock unconditionally owned by one of these entities which has its management and daily business controlled by members of an economically disadvantaged Indian tribe or Native Hawaiian Organization, and which meets the requirements of 13 CFR part 124.

(b) *Evaluation preference*—(1) Offers will be evaluated by adding a factor of ten percent to the price of all offers, except—

(i) Offers from small disadvantaged business concerns, which have not waived the preference;

(ii) Otherwise successful offers of eligible products under the Trade Agreements Act when the dollar threshold for application of the Act is exceeded;

(iii) Offers where application of the factor would be inconsistent with a Memorandum of Understanding or other international agreement with a foreign government.

(2) The ten percent factor will be applied on a line item by line item basis or to any group of items on which award may be made. Other evaluation factors described in the solicitation will be applied before application of the ten percent factor. The ten percent factor will not be applied if using the preference would cause the contract award to be made at a price which exceeds the fair market price by more than ten percent.

(c) *Waiver of evaluation preference.* A small disadvantaged business may elect to waive the preference, in which case the ten percent factor will be added to its offer for evaluation purposes. The agreements in paragraph (d) do not apply to offers which waive the preference.

_____ Offeror elects to waive the preference.

(d) *Agreements*—(1) A small disadvantaged business concern which did not waive the preference, agrees that in performance of the contract, in the case of a contract for—

(i) Services, except construction, at least 50 percent of the cost of personnel for contract performance will be spent for employees of the concern.–

(ii) Supplies, at least 50 percent of the cost of manufacturing, excluding the cost of materials, will be performed by the concern.

(iii) General construction, at least 15 percent of the cost of the contract, excluding the cost of materials, will be performed by employees of the concern.

(iv) Construction by special trade contractors, at least 25 percent of the cost of the contract, excluding the cost of materials, will be performed by employees of the concern.

(2) A small disadvantaged business submitting an offer in its own name agrees to furnish in performing this contract only end items manufactured or produced by small disadvantaged business concerns.

Alternate I (Date). When the acquisition is for a product in a class for which the contracting officer has determined that there are no small disadvantaged business manufacturers or processors in accordance with 19.503–2(c), substitute the following paragraph (d)(2) for paragraph (d)(2) of the basic clause:

(d)(2) A small disadvantaged business submitting an offer in its own name agrees to furnish, in performing the contract, only end items manufactured or produced by small business concerns inside the United States, its territories and possessions, the Commonwealth of Puerto Rico, the Trust Territory of the Pacific Islands, or the District of Columbia. However, this requirement does not apply in connection with construction or service contracts.

52.220–1 [Redesignated]

52.220–2, 52.220–3, and 52.220–4 [Removed and reserved]

75. Sections 52.220–2, 52.220–3, and 52.220–4 are removed and reserved.

PART 53—FORMS

76. Section 53.219 is revised to read as follows:

53.219 Small business programs.

The following standard forms are prescribed for use in reporting small, small disadvantaged and women-owned small business subcontracting data, as specified in part 19:

(a) *SF 294 (REV XX), Subcontracting Report for Individual Contracts.* (See 19.704(a)(5).)

(b) *SF 295 (REV XX), Summary Subcontract Report.* (See 19.704(a)(5).) SF 295 is authorized for local reproduction and a copy is furnished for this purpose in part 53 of the loose-leaf edition of the FAR.

77. Sections 53.301–294 and 53.301–295 are revised to read as follows:

53.301–294 Subcontracting Reporting for Individual Contracts.

BILLING CODE 6820–34–P

SUBCONTRACTING REPORT FOR INDIVIDUAL CONTRACTS
(Whole dollar amounts should be indicated. See instructions on reverse)

OMB No.: 9000-0006
Expires: 09/30/95

ublic reporting burden for this collection of information is estimated to average 5.73 hours per response, including the time for reviewing ıstructions, searching existing data sources, gathering and maintaining the data needed, and completing and reviewing the collection of ıformation. Send comments regarding this burden estimate or ar ı other aspect of this collection of information, including suggestions for ɜducing this burden, to the FAR Secretariat (VRS), Office of Fede ıl Acquisition Policy, GSA, Washington, DC 20405; and to the Office of ıanagement and Budget, Paperwork Reduction Project (9000-0006), Washington, DC 20503.

ıPORTANT: DOD contractors–complete ı items. Civilian contractors–do not ɔmplete shaded items unless required ı the agency.	1. REPORTING PERIOD: ☐ OCT 1 - MAR 31 FY_____ ☐ APR 1 - SEP 30	2. TYPE OF REPORT ☐ REGULAR ☐ FINAL ☐ REVISED	3. DATE SUBMITTED 4. REPORT NO.
REPORT SUBMITTED AS: ☐ PRIME CONTRACTOR ☐ SUBCONTRACTOR	6. AGENCY OR CONTRACTOR AWARDING CONTRACT *(Name, Address and ZIP Code)*	7. REPORTING CONTRACTOR *(Name, Address, and ZIP Code)*	

DATES OF CONTRACT PERIOD OF PERFORMANCE *(MM/DD/YY)* FROM: TO:	12A. EST. AMT. OF SUBCONTRACT AWDS. UNDER ORIG. CONTRACT $	12B. REV. AMT. OF SUBCONTRACT AWDS. UNDER MOD. CONTRACT *(If applicable)* $
PRIME CONTRACT AND SUBCONTRACT NO. *(If applicable)*		

0. ADMINISTERING AGENCY *(If other than Awarding Agency)*	13A. ORIGINAL GOALS	DOLLARS	PERCENT
	1. SMALL BUSINESS CONCERNS		
	2. SMALL DISADV. BUSINESS CONCERNS		
	3. WOMEN-OWNED SMALL BUSINESS CONCERNS		
1A. ORIGINAL CONTRACT AMOUNT $	13B. REVISED GOALS *(If applicable)*		
11B. REVISED CONTRACT AMOUNT *(If applicable)* $	1. SMALL BUSINESS CONCERNS		
	2. SMALL DISADV. BUSINESS CONCERNS		
	3. WOMEN-OWNED SMALL BUSINESS CONCERNS		

14. GOAL AMOUNTS IN 13A AND 13B ☐ DO INCLUDE INDIRECT COSTS ☐ DO NOT INCLUDE INDIRECT COSTS

SUBCONTRACT AWARDS

DIRECT SUBCONTRACT AWARDS	THIS REPORTING PERIOD		CUMULATIVE *(From beginning of Subcontract Plan)*	
	DOLLARS	PERCENT	DOLLARS	PERCENT
15A. SMALL BUSINESS CONCERNS *($ amt. and % of 15C)*				
15B. LARGE BUSINESS CONCERNS *($ amt. and % of 15C)*				
15C. TOTAL *(Sum of 15A and 15B)*		100		100
16. SMALL DISADVANTAGED BUSINESS CONCERNS *($ amt. and % of 15C)*				
17. WOMEN-OWNED SMALL BUSINESS CONCERNS *($ amt. and % of 15C)*				

INDIRECT SUBCONTRACT AWARDS	DOLLARS	
	THIS REPORTING PERIOD	CUMULATIVE *(From beginning of Subcontract Plan)*
18A. SMALL BUSINESS CONCERNS		
18B. LARGE BUSINESS CONCERNS		
18C. SMALL DISADVANTAGED BUSINESS CONCERNS		
18D. WOMEN-OWNED SMALL BUSINESS CONCERNS		

19. REMARKS (Enter a short narrative explanation if: (a) Small Business, Small Disadvantaged Business, or Women-Owned Small Business accomplishments fall below that which would be expected using a straight line projection of goals through the period of contract performance or (b) either goal is not met if this is the final report.)

20. TYPED NAME AND TITLE OF INDIVIDUAL ADMINISTERING SUBCONTRACTING PLAN	SIGNATURE	TELEPHONE NO. ( )
21. TYPED NAME AND TITLE OF APPROVING OFFICER	SIGNATURE	DATE

SN 7540-01-152-8078
revious edition is not usable

294-104

STANDARD FORM 294 (REV.)
Prescribed by GSA - FAR (48 CFR) 53.219(a)

GENERAL INFORMATION

1. This form collects subcontract data from Federal contractors and subcontractors that: (a) hold one or more contracts over $500,000 ($1 million for construction); and (b) are required to report subcontract awards to small business (SB), small disadvantaged business (SDB), and women-owned small business (WOSB) concerns under a subcontracting plan pursuant to the Small Business Act of 1958.

2. Reports shall be submitted to the contracting officer semi-annually during the period of contract performance. A separate report is required for each contract at contract completion. This report is due by the 30th day of the month following the close of the reporting periods. In accordance with instructions contained in the contract or subcontract, or as directed by the contracting officer. Reports are required when due, including negative reports (i.e., when there has been no subcontracting activity or there has been no change from the last reporting period).

3. This report should not be submitted by small business concerns.

4. This report is not required for commercial products for which a company-wide annual plan has been approved. The Summary Subcontract Report (SF 295) is required for commercial products in accordance with instructions on that form.

5. Only subcontracts involving performance within the U.S., its possessions, Puerto Rico, and the Trust Territory of the Pacific Islands should be included in this report.

6. All dollar amounts shall be rounded to the nearest whole dollar. All percentages shall be rounded to the nearest tenth of one percent.

SPECIFIC INSTRUCTIONS
(for items which are not self-explantory)

ITEM 1: Check the appropriate block for the reporting period through which the report is being submitted and enter the Federal fiscal year (October 1 through September 30). Leave blank if this is a final report.

ITEM 2: Check whether report is a regular report or final report and/or is a revision.

ITEM 4: Specify the sequential report covering this contract. The initial report shall be identified as Report Number 1.

ITEM 5: Check whether the reporting contractor is reporting as a Federal Prime contractor or a subcontractor.

ITEM 6: Enter the name and address of the Federal Department or Agency awarding the contract, or the prime contractor awarding the subcontract.

ITEM 7: Enter the name and address of the contractor submitting the report.

ITEM 8: Enter the beginning and projected ending dates of the period of performance of the contract, including priced option periods.

ITEM 10: Identify the Federal agency administering the contract if other than the awarding agency. If DOD is the administering agency, identify the appropriate military department, i.e., Army, Navy, Air Force, or Defense Logistics Agency. This item is not required if reporting as a subcontractor.

ITEM 11A: Enter the total dollar value of the original contract. (State the estimated cost if cost-type contract, price if fixed-price contract, and maximum contract amount if indefinite quantity contract. Include all priced options.)

ITEM 11B: If the dollar value of the original contract has been modified, enter the revised contract amount.

ITEM 12A: Enter the estimated dollar value of subcontracts as set forth in the Subcontracting Plan in the original contract.

ITEM 12B: If the dollar value of the Subcontracting Plan has been modified, enter the revised amount under the modified contract.

ITEM 13A: Enter in the appropriate blocks the dollar amount and percent of the reporting contractor's total planned subcontract awards contractually agreed upon as goals for subcontracting with SB, SDB, and WOSB concerns. NOTE: In 13A(1) the amounts entered should include planned subcontracting with SB, SDB, and WOSB concerns. In 13A(2) the amounts entered should reflect planned subcontracting with SDB concerns, including women-owned SDBs. (For DOD contracts, include planned subcontract awards to Historically Black Colleges and Universities or Minority Institutions (HBCUs/MIs) in 13A(1) and 13A(2). In 13A(3) the amounts entered should reflect planned subcontracting with WOSB concerns, including women-owned SDBs.

ITEM 13B: If the original goals agreed upon at contract award have been revised as result of contract modifications, the amounts entered should reflect those revised goals. NOTE: in 13B(1), the amounts should include planned subcontracting with SB, SDB, and WOSB concerns., if applicable. In 13B(2) the amounts entered should reflect planned subcontracting with SDB concerns, including women-owned SDBs. (For DOD contracts, include planned subcontract awards to HBCUs/MIs in 13B(1) and 13B(2).) In 13B(3) the amount entered should reflect planned submcontracting with WOSB concerns, including women-owned SDBs.

ITEM 14: Check the appropriate block to indicate whether indirect awards are included in the goal amounts entered in items 13A and 13B as specified in the Subcontracting Plan.

ITEM 15A: Enter the dollar amount and percent of subcontracting with SB concerns, including subcontracting with SDB and WOSB concerns for this period and cumulatively. This item reflects progress toward Small Business goal accomplishment indicated in Items 13A(1) and 13B(1) (if applicable), and includes indirect awards if such costs are included in goal amounts. For DOD contracts include subcontract awards to HBCUs/MIs.

ITEM 15B: Enter the amounts for subcontracting with large business concerns (excluding subcontracts with non-profit, educational institutions, and state/local governments) for this period and cumulatively. Include indirect awards if such costs are included in goal amounts.

ITEM 15C: Total the dollar amounts of Items 15A and 15B.

ITEM 16: Enter the dollar amount of subcontracting with SDB concerns (including women-owned SDBs) only (for DOD include subcontracts with HBCUs and MIs) and the percent that this amount represents of total subcontracting for this period and cumulatively. This item reflects progress toward Small Disadvantaged Business goal accomplishment as indicated in Item 13A(2) or 13B(2) (if applicable), and includes indirect awards if such costs are included in goal amounts.

ITEM 17: Enter the dollar amount of subcontracting with WOSB concerns (including women-owned SDBs). This item reflects progress toward women-owned Small Business goal accomplishment as indicated in Item 13A(3) or 13B(3) (if applicable), and includes indirect awards if such costs are included in goal amounts.

ITEM 18: For DOD activities, if indirect awards are included in goal amounts (as indicated in item 14), enter the dollar amount of indirect subcontracting with SB (including SDB, WOSB, and HBCUs/MIs), Large Business, SDB, (including HBCUs/MIs), and WOSB concerns. These amounts are subsets of Items 15A, 15B, 16, and 17, respectively, and represent the portion of goal achievement being accomplished by indirect subcontracting.

ITEM 19: Enter the name, title, signature and telephone number of the reporting contractor's administrator responsible for monitoring the Subcontracting Plan.

ITEM 20: The approving officer shall be the senior official of the company, division, or subdivision (plant or profit center) responsible for contract performance.

DEFINITIONS

1. Commerical Products means products sold in substantial quantities to the general public and/or industry at established catalog or market prices.

2. Subcontract means a contract, purchase order, amendment, or other legal obligation executed by the reporting organization calling for supplies or services required for the performance of the original contract or subcontract. Purchases from a corporation, company, or subdivision which is an affiliate of the reporting organization are not considered "subcontracts" and are not to be included in this report.

3. Direct Subcontract Awards are those which are identified with the performance of a specific government contract, including the allocable parts of awards for materials which are to be incorporated into products under more than one Government contract.

4. Indirect Subcontract Awards are those which, because of incurrence for common or joint purposes, are not identified with specific Government contracts; these awards are related to Government contract performance but remain for allocation after direct awards have been determined the identified to specific Government contracts.

STANDARD FORM 294 (REV.) BACK

53.301–295 Summary Subcontract Report.

SUMMARY SUBCONTRACT REPORT
(See instructions on reverse)

OMB No.: 9000-0007
Expires: 09/30/95

Public reporting burden for this collection of information is estimated to average 16.21 hours per response, including the time for reviewing instructions, searching existing data sources, gathering and maintaining the data needed, and completing and reviewing the collection of information. Send comments regarding this burden estimate or any other aspect of this collection of information, including suggestions for reducing this burden, to the FAR Secretariat (VRS), Office of Federal Acquisition Policy ,GSA, Washington, DC 20405; and to the Office of Management and Budget, Paperwork Reduction Project (9000-0007), Washington, DC 20503.

IMPORTANT: DOD contractors–complete all items. Civilian contractors–do not complete shaded items unless required by the agency.

1. REPORTING PERIOD (check one):

A. DOD FEDERAL FY 19____ QUARTER ENDING: ☐ DEC 31 ☐ JUN 30 ☐ MAR 31 ☐ SEP 30

B. CIVILIAN FEDERAL FY 19____ ☐ ANNUAL (OCT 1 - SEP 30) (except commercial product)

C. DOD & CIVILIAN FEDERAL FY 19____ ☐ ANNUAL (OCT 1 - SEP 30) (commercial product)

2. TYPE OF REPORT ☐ REGULAR ☐ FINAL ☐ REVISED

3. CONTRACTING AGENCY

4. ADMINISTERING AGENCY (if different from Item 3)

5. DATE OF LAST GOV. REVIEW

6. REVIEWING AGENCY

7. CONTRACTOR ESTABLISHMENT CODE (if available)

8. REPORT SUBMITTED AS: ☐ PRIME CONTRACTOR ☐ SUBCONTRACTOR ☐ BOTH

9. CORPORATION, COMPANY OR SUBDIVISION COVERED (Name, Address, ZIP Code)

10. MAJOR PRODUCTS OR SERVICE LINES

CUMULATIVE FISCAL YEAR SUBCONTRACT AWARDS
(Report in whole dollars)

SUBCONTRACT AWARDS	CURRENT FY (Through Reporting Qtr)		SAME PERIOD LAST YEAR	
	DOLLARS	PERCENT	DOLLARS	PERCENT
11A. SMALL BUSINESS CONCERNS ($ amt. and % of 11C)				
11B. LARGE BUSINESS CONCERNS ($ amt. and % of 11C)				
11C. TOTAL (Sum of 11A and 11B)		100		100
12. SMALL DISADVANTAGED BUSINESS CONCERNS ($ amt. and % of 11C)				
13. WOMEN-OWNED SMALL BUSINESS CONCERNS ($ amt. and % of 11C)				
14. HIST. BLACK COLLEGES & UNIV/MINORITY INST.				

15. REMARKS

SUBCONTRACT GOAL ACHIEVEMENT
(Report in whole dollars)

CONTRACTS			NO. OF CONTRACTS WITH GOALS	TOTAL $ VALUE OF SUBCONTRACTS AWARDED	$ VALUE OF SUBCONTRACT GOALS	ACTUAL GOALS ACHIEVEMENT	
						DOLLARS	%
16. CONTRACTS WITH SMALL BUSINESS SUBCONTRACT GOALS	A. ACTIVE CONTRACTS						
	B. CONTRACTS COMPLETED THIS QTR.	(1) WHICH MET GOALS					
		(2) NOT MEETING GOALS					
17. CONTRACTS WITH SMALL DISADV. BUSINESS SUB-CONTRACT GOALS	A. ACTIVE CONTRACTS						
	B. CONTRACTS COMPLETED THIS QTR.	(1) WHICH MET GOALS					
		(2) NOT MEETING GOALS					
18. CONTRACTS WITH WOMEN-OWNED SMALL BUSINESS CONCERNS	A. ACTIVE CONTRACTS						
	B. CONTRACTS COMPLETED THIS QTR.	(1) WHICH MET GOALS					
		(2) NOT MEETING GOALS					

19. NAME AND TITLE OF LIAISON OFFICER	SIGNATURE	DATE	TELEPHONE NO. ( )
20. NAME AND TITLE OF THE APPROVING OFFICER	SIGNATURE		DATE

AUTHORIZED FOR LOCAL REPRODUCTION
Previous edition is not usable

STANDARD FORM 295 (REV.)
Prescribed by GSA-FAR (48 CFR) 53.219(b)

GENERAL INSTRUCTIONS

1. This form collects subcontract data from Federal contractors and subcontractors that: (a) hold one or more contracts over $500,000 ($1 million for construction); and (b) are required to report subcontract awards to Small Business (SB), Small Disadvantaged Business Concerns (SDB), and Women-Owned Small Business Concerns (WOSB) under a subcontracting plan pursuant to the Small Business Act of 1958.

2. This report may be submitted on a corporate, company, or subdivision (e.g., plant or division operating as a separate profit center) basis, unless otherwise directed by the agency awarding the contract. However, after submission of the first report on this form, the reporting organization shall submit succeeding reports on the same basis.

3. If a reporting organization is performing work for more than one Federal agency, a separate report shall be submitted to each agency covering only that agency's contracts, provided at least one of that agency's contracts is over $500,000 ($1 million for construction) and contains a subcontracting plan. (See special instructions for commercial products plans.)

4. For DOD activities, reports shall be submitted quarterly, except that, for contracts covered by an approved company-wide subcontracting plan for commercial products, reports shall be submitted annually. Reports are due 30 days after the close of each reporting period. For civilian agencies, reports shall be submitted annually. For civilian agencies, reports are due 30 days after the close of the fiscal year (September 30). See special instructions for commercial products plans below.

5. All dollar amounts shall be rounded to the nearest whole dollar. All percentages shall be rounded to the nearest tenth of one percent.

6. Only subcontracts involving performance within the U.S., its possessions, Puerto Rico, and the Trust Territory of the Pacific Islands should be included in this report.

7. Subcontract award data reported on this form shall be limited to awards made by the reporting organization to its immediate subcontractors. Reporting organizations may not take credit for awards made by lower tier subcontractors.

8. Attach a narrative to this report if (a) zero is entered in blocks 11A, 12, or 13 for the current fiscal year, (b) the percent entry in block 11A for current fiscal year is more than 5 percentage points below the percentage reported for the same period last year, or (c) the percent entry in block 12 or 13 for the current fiscal year is lower than the percent reported for the same period last year.

SPECIFIC INSTRUCTIONS

ITEM 2: Check whether report is a regular report or final report and/or revision. Final report should be checked only if contractor has completed all Government contracts containing subcontracting plans.

ITEM 3: If reporting as a "Prime Contractor" or "Both" in Item 8, identify the agency (e.g., DOD, HUD, GSA, etc.) which awarded the prime contract(s) to the reporting organization. If reporting as a "Subcontractor" in Item 8, identify the department or agency responsible for the prime contract award(s) which resulted in the largest dollar value subcontract of those subcontracts reflected in this report.

ITEM 4: Identify the department or agency performing contract administration over the reporting organization (if different from Item 3). For DOD contracts enter the military department or agency which has responsibility for the subcontracting program of the reporting entity (i.e., Army, Navy, Air Force, or Defense Logistics Agency), not the "Office of the Deputy Secretary of Defense."

ITEMS 5 & 6: Enter the date of the last formal surveillance review conducted by the cognizant department or agency Small and Disadvantaged Business Specialist or other review personnel. For DOD, also identify the military department or Defense Contract Administration Service that conducted the review. In those cases where the Small Business Administration conducted its own review, enter "SBA" and the date.

ITEM 7: Enter the nine position number that identifies the contractor establishment, if available.

ITEM 8: Check whether the reporting organization is reporting as a Federal prime contractor or a subcontractor or both.

ITEM 9: Enter the name and address of the reporting organization, corporation, company, or subdivision thereof which is covered by the data submitted.

ITEM 10: Identify the major product or service lines of the reporting organization.

ITEMS 11 & 12: These entries include all subcontract awards, both those made under contracts with plans and goals and those made under contracts which do not have plans and goals. Amounts reported include both direct awards and an appropriate prorated portion of indirect awards. Base the indirect portion on the percentage of work being performed for the organization to which the report is being submitted (shown in Item 3) in relation to other work being performed by the reporting organization. Do not include awards made in support of commercial business being performed by the reporting entity. For DOD activities, report on a quarterly cumulative basis until the end of the fiscal year (September 30) and begin a new quarterly reporting cycle each October 1.

ITEM 11A: Report all subcontract awards to SBs (including subcontracts with SDBs and WOSBs) regardless of dollar value, made by the reporting organization under all Federal prime contracts awarded by the contracting agency shown in Item 3, and/or under all subcontracts under prime contracts, if reporting as a subcontractor. (For DOD, NASA, and Coast Guard contracts, include subcontracting awards to Historically Black Colleges and Universities (HBCUs) and Minority Institutions (MIs).

ITEM 11B: Report all subcontract awards to large business, regardless of dollar value, made by the reporting organization under all Federal prime contracts awarded by the contracting agency shown in Item 3, and/or under all subcontracts under prime contracts, if reporting as a subcontractor. For DOD, NASA and Coast Guard contracts, exclude subcontracting awards to HBCUs and MIs.

ITEM 12: Report all subcontract awards to SDBs (including Women-Owned SDBs) regardless of dollar value, made by the reporting organization under all Federal prime contracts awarded by the contracting agency shown in Item 3, and/or under all subcontracts under prime contracts, if reporting as a subcontractor. For DOD, NASA, and Coast Guard contracts, include subcontract awards to HBCUs and MIs.

ITEM 13: Report all subcontract awards to WOSBs (including Women-Owned SDBs) regardless of dollar value made by the reporting organization under all Federal prime contracts awarded by the contracting agency shown in Item 3, and/or under all subcontracts under prime contracts, if reporting as a subcontractor.

ITEM 14: For DOD, enter the dollar value of all subcontracts with HBCUs/MIs. This is a subset of awards to SDBs (Item 12).

ITEMS 16, 17, & 18: For each item (as applicable), enter the number of prime and subcontracts valued over $500,000 ($1 million for construction) which have goals, the dollar value of all subcontracts awarded to date under these contracts, the dollar value of subcontract goals, as set forth in subcontracting plan, and for completed contracts, your actual goal achievement expressed in dollars and percent of goal. The percentage of actual goal achievement is determined by dividing the amount of dollars shown in the column entitled "Actual Goal Achievement" by the dollars shown in the column entitled "$ Value of Subcontract Goals." Information presented in this section represents subcontract awards from the inception of the contract(s) and is not restricted to this fiscal year. The percentages reported in Items 16B(1), 17B(1), and 18B(1) will always be 100 or more and the percentages reported in Items 16B(2), 17B(2) and 18B(2) will always be less than 100.

ITEM 19: The liaison officer shall be the reporting contractor's official responsible for administering the subcontracting program.

ITEM 20: The approving officer shall be the chief executive officer or in the case of a separate division or plant, the senior individual responsible for overall division plant operations.

SPECIAL INSTRUCTIONS FOR COMMERCIAL PRODUCTS PLANS

1. Reporting organizations that have an approved company-wide annual subcontracting plan for commercial products shall submit this report annually as of September 30 each year.

2. The annual report shall include all subcontracting activity under commercial products plans in effect during the Government fiscal year and shall be submitted in addition to required reports for other than commercial products, if any.

3. Enter in Items 11 and 12 the total of all subcontract awards under the reporting organization's commercial products plans. Show in Item 16 or in an attachment, the percentage of this total attributable to each agency from which contracts for such commercial products were received. Send a copy of this report to each agency on that listing.

4. Do not complete Items 16, 17, and 18.

DEFINITIONS

1. Commercial Products means products sold in substantial quantities to the general public and/or industry at established catalog or market prices.

2. Subcontract means a contract, purchase order, amendment, or other legal obligation executed by the reporting organization calling for supplies or services required for the performance of the original contract or subcontract. Purchases from a corporation, company, or subdivision which is an affiliate of the reporting organization are not considered "subcontracts" and are not to be included in this report.

3. Direct Subcontract Awards are those which are identified with the performance of a specific Government contract, including allocable parts of awards for materials which are to be incorporated into products under more than one Government contract.

4. Indirect Subcontract Awards are those which, because of incurrence for common or joint purposes, are not identified with specific Government contracts; these awards are related to Government contract performance but remain for allocation after direct awards have been determined and identified to specific Government contracts.

STANDARD FORM 295 (REV.) **BACK**

[FR Doc. 95–2 Filed 1–5–95; 8:45 am]
BILLING CODE 6820–34–C

Reader Aids

Federal Register

Vol. 60, No. 4

Friday, January 6, 1995

INFORMATION AND ASSISTANCE

Federal Register

Index, finding aids & general information	**202–523–5227**
Public inspection announcement line	**523–5215**
Corrections to published documents	**523–5237**
Document drafting information	**523–3187**
Machine readable documents	**523–4534**

Code of Federal Regulations

Index, finding aids & general information	**523–5227**
Printing schedules	**523–3419**

Laws

Public Laws Update Service (numbers, dates, etc.)	**523–6641**
Additional information	**523–5230**

Presidential Documents

Executive orders and proclamations	**523–5230**
Public Papers of the Presidents	**523–5230**
Weekly Compilation of Presidential Documents	**523–5230**

The United States Government Manual

General information	**523–5230**

Other Services

Data base and machine readable specifications	**523–4534**
Guide to Record Retention Requirements	**523–3187**
Legal staff	**523–4534**
Privacy Act Compilation	**523–3187**
Public Laws Update Service (PLUS)	**523–6641**
TDD for the hearing impaired	**523–5229**

ELECTRONIC BULLETIN BOARD

Free **Electronic Bulletin Board** service for Public Law numbers, Federal Register finding aids, and list of documents on public inspection. **202–275–0920**

FAX-ON-DEMAND

You may access our Fax-On-Demand service. You only need a fax machine and there is no charge for the service except for long distance telephone charges the user may incur. The list of documents on public inspection and the daily Federal Register's table of contents are available using this service. The document numbers are 7050-Public Inspection list and 7051-Table of Contents list. The public inspection list will be updated immediately for documents filed on an emergency basis.
NOTE: YOU WILL ONLY GET A LISTING OF DOCUMENTS ON FILE AND NOT THE ACTUAL DOCUMENT. Documents on public inspection may be viewed and copied in our office located at 800 North Capitol Street, N.W., Suite 700. The Fax-On-Demand telephone number is: **301–713–6905**

FEDERAL REGISTER PAGES AND DATES, JANUARY

1–318.....3
319–1706.....4
1707–1988.....5
1989–2320.....6

CFR PARTS AFFECTED DURING JANUARY

At the end of each month, the Office of the Federal Register publishes separately a List of CFR Sections Affected (LSA), which lists parts and sections affected by documents published since the revision date of each title.

3 CFR

Executive Orders:
12826 (Superseded by 12944).....309
12886 (Superseded by 12944).....309
12944.....309
Proclamations:
5759 (See Proc. 6763).....1007
6455 (See Proc. 6763).....1007
6641 (See Proc. 6763).....1007
6726 (See Proc. 6763).....1007

5 CFR

532.....319

7 CFR

7.....1989
272.....1707
273.....1707
.....1996
.....2000
929.....1
966.....2
1005.....319
1032.....320
1434.....321
1421.....1709
1427.....1709
1755.....1710, 1711
Proposed Rules:
75.....379
1007.....65
1032.....65
1050.....379
1093.....65
1094.....65
1096.....65
1099.....65
1108.....65
1280.....380
1421.....381
1755.....1758, 1759

9 CFR

317.....174
381.....174

10 CFR

32.....322

12 CFR

219.....231
607.....325
612.....325
614.....325
615.....325
620.....325

14 CFR

25.....325
39...3, 327, 329, 330, 332, 336, 1712
71.....338
97.....2009
Proposed Rules:
39.....66, 382, 384, 386, 388, 389, 393, 2033, 2036, 2041
61.....395
67.....395
71.....396, 2043, 2044, 2045, 2047
73.....2048

17 CFR

200.....5

18 CFR

2.....339
141.....1716
154.....2011
157.....2011
270.....2011
271.....2011
272.....2011
273.....2011
274.....2011
275.....2011
284.....1716
347.....356
348.....358
375.....1716
385.....1716

19 CFR

206.....6
207.....18

20 CFR

416.....360

21 CFR

5.....2014
520.....362
522.....362

23 CFR

655.....363

24 CFR

91.....1878
92.....1878
570.....1878, 1922
574.....1878
576.....1878
968.....1878
Proposed Rules:
Ch. IX.....303

25 CFR

Proposed Rules:
151.....1956

26 CFR

1.....23, 2049
301.....33

Proposed Rules:
1 .....397, 406, 2049
53.....82
301.....83

27 CFR

Proposed Rules:
4.....411
5.....411
7.....411

28 CFR

16.....38
540.....240
545.....240

29 CFR

825.....2180, 2282

30 CFR

Proposed Rules:
56.....1866
57.....1866

31 CFR

103.....220, 234
209.....416

32 CFR

43a.....1720
112.....1720
113.....1720
536.....1735
537.....1735

Proposed Rules:
169a.....417

33 CFR

Proposed Rules:
156.....1958

34 CFR

74.....365
80.....365

Proposed Rules:
200.....85
201.....85
203.....85
212.....85

36 CFR

Proposed Rules:
800.....86

40 CFR

35.....366
51.....1735
52...38, 40, 41, 372, 375, 1738, 2014, 2016, 2018, 2022, 2025, 2026, 2066, 2067
70.....1741
81.....41, 2026
180.....378
261.....1744
268.....242

Proposed Rules:
Ch. I.....418
52 .....86, 418, 2066, 2067
87.....88
81.....88
180.....89
230.....419
300.....422

41 CFR

201–3.....2029
201–9.....2029
201–18.....2029
201–20.....2029
201–21.....2029
201–23.....2029
201–39.....2029
60–250.....1986

42 CFR

410.....46
414.....46

43 CFR

Public Land Order
7108.....2030

47 CFR

Proposed Rules:
61.....2068
69.....2068
73 (3 documents) 90, 91

48 CFR

231.....1747
242.....1747

Proposed Rules:
Ch. I.....2302

49 CFR

382.....2030
391.....54
555.....1749
571.....1750

Proposed Rules:
214.....1761
390.....91
391.....91
392.....91
396.....91
Ch. X.....2069

50 CFR

17.....56
20.....61, 2177
625.....1757
630.....2032

Proposed Rules:
17.....69, 2070
18.....70
23.....73
17.....425
227.....2070
678.....2071