AUTHENTICATED
U.S. GOVERNMENT
INFORMATION
GPO

10–21–94
Vol. 59 No. 203

federal register

Friday
October 21, 1994

United States
Government
Printing Office
SUPERINTENDENT
OF DOCUMENTS
Washington, DC 20402

OFFICIAL BUSINESS
Penalty for private use, $300

SECOND CLASS NEWSPAPER

Postage and Fees Paid
U.S. Government Printing Office
(ISSN 0097–6326)

10-21-94
Vol. 59 No. 203
Pages 53033-53346

federal register

Friday
October 21, 1994

Briefings on How To Use the Federal Register
For information on briefings in Washington, DC, see announcement on the inside cover of this issue.

FEDERAL REGISTER Published daily, Monday through Friday, (not published on Saturdays, Sundays, or on official holidays), by the Office of the Federal Register, National Archives and Records Administration, Washington, DC 20408, under the Federal Register Act (49 Stat. 500, as amended; 44 U.S.C. Ch. 15) and the regulations of the Administrative Committee of the Federal Register (1 CFR Ch. I). Distribution is made only by the Superintendent of Documents, U.S. Government Printing Office, Washington, DC 20402.

The **Federal Register** provides a uniform system for making available to the public regulations and legal notices issued by Federal agencies. These include Presidential proclamations and Executive Orders and Federal agency documents having general applicability and legal effect, documents required to be published by act of Congress and other Federal agency documents of public interest. Documents are on file for public inspection in the Office of the Federal Register the day before they are published, unless earlier filing is requested by the issuing agency.

The seal of the National Archives and Records Administration authenticates this issue of the **Federal Register** as the official serial publication established under the Federal Register Act. 44 U.S.C. 1507 provides that the contents of the **Federal Register** shall be judicially noticed.

The **Federal Register** is published in paper, 24x microfiche and as an online database through *GPO Access*, a service of the U.S. Government Printing Office. The online database is updated by 6 a.m. each day the **Federal Register** is published. The database includes both text and graphics from Volume 59, Number 1 (January 2, 1994) forward. It is available on a Wide Area Information Server (WAIS) through the Internet and via asynchronous dial-in. The annual subscription fee for a single workstation is $375. Six-month subscriptions are available for $200 and one month of access can be purchased for $35. Discounts are available for multiple-workstation subscriptions. To subscribe, Internet users should telnet to wais.access.gpo.gov and login as newuser (all lower case); no password is required. Dial in users should use communications software and modem to call (202) 512–1661 and login as wais (all lower case); no password is required; at the second login prompt, login as newuser (all lower case); no password is required. Follow the instructions on the screen to register for a subscription for the **Federal Register** Online via *GPO Access*. For assistance, contact the *GPO Access* User Support Team by sending Internet e-mail to help@eids05.eids.gpo.gov, or a fax to (202) 512–1262, or by calling (202) 512–1530 between 7 a.m. and 5 p.m. Eastern time, Monday through Friday, except Federal holidays.

The annual subscription price for the **Federal Register** paper edition is $444, or $490 for a combined **Federal Register**, Federal Register Index and List of CFR Sections Affected (LSA) subscription; the microfiche edition of the **Federal Register** including the Federal Register Index and LSA is $403. Six month subscriptions are available for one-half the annual rate. The charge for individual copies in paper form is $6.00 for each issue, or $6.00 for each group of pages as actually bound; or $1.50 for each issue in microfiche form. All prices include regular domestic postage and handling. International customers please add 25% for foreign handling. Remit check or money order, made payable to the Superintendent of Documents, or charge to your GPO Deposit Account, VISA or MasterCard. Mail to: New Orders, Superintendent of Documents, P.O. Box 371954, Pittsburgh, PA 15250–7954.

There are no restrictions on the republication of material appearing in the **Federal Register.**

How To Cite This Publication: Use the volume number and the page number. Example: 59 FR 12345.

SUBSCRIPTIONS AND COPIES

PUBLIC

Subscriptions:

Paper or fiche	202–512–1800
Assistance with public subscriptions	512–1806

Online:

Telnet wais.access.gpo.gov, login as newuser <enter>, no password <enter>; or use a modem to call (202) 512–1661, login as wais, no password <enter>, at the second login as newuser <enter>, no password <enter>.

Assistance with online subscriptions	202–512–1530

Single copies/back copies:

Paper or fiche	512–1800
Assistance with public single copies	512–1803

FEDERAL AGENCIES

Subscriptions:

Paper or fiche	523–5243
Assistance with Federal agency subscriptions	523–5243

For other telephone numbers, see the Reader Aids section at the end of this issue.

THE FEDERAL REGISTER
WHAT IT IS AND HOW TO USE IT

FOR: Any person who uses the Federal Register and Code of Federal Regulations.

WHO: The Office of the Federal Register.

WHAT: Free public briefings (approximately 3 hours) to present:

1. The regulatory process, with a focus on the Federal Register system and the public's role in the development of regulations.
2. The relationship between the Federal Register and Code of Federal Regulations.
3. The important elements of typical Federal Register documents.
4. An introduction to the finding aids of the FR/CFR system.

WHY: To provide the public with access to information necessary to research Federal agency regulations which directly affect them. There will be no discussion of specific agency regulations.

WASHINGTON, DC
(TWO BRIEFINGS)

WHEN: October 25 at 9:00 am and 1:30 pm

WHERE: Office of the Federal Register Conference Room, 800 North Capitol Street NW, Washington, DC (3 blocks north of Union Station Metro)

RESERVATIONS: 202–523–4538

Printed on recycled paper containing 100% post consumer waste

Contents

Federal Register
Vol. 59, No. 203
Friday, October 21, 1994

Agency for Health Care Policy and Research
NOTICES
Meetings:
Clinical practice guidelines development—
Smoking prevention and cessation guidelines, 53185–53186

Agency for Toxic Substances and Disease Registry
NOTICES
Superfund program:
Hazardous substances priority list (toxicological profiles), 53186–53187

Agriculture Department
See Farmers Home Administration
See Forest Service
See Rural Electrification Administration

Air Force Department
RULES
Privacy Act; implementation, 53098–53109

Blind or Severely Disabled, Committee for Purchase From People Who Are
See Committee for Purchase From People Who Are Blind or Severely Disabled

Children and Families Administration
NOTICES
Committees; establishment, renewal, termination, etc.:
Child Abuse and Neglect Advisory Board; correction, 53185

Coast Guard
RULES
Pollution:
Oil or oil residue primary cargo-carrying tank vessel cargo tanks; overfill devices minimum standards and phased-in installation and use requirements, 53286–53291

Commerce Department
See International Trade Administration
See National Oceanic and Atmospheric Administration

Commission on the Social Security Notch Issue
NOTICES
Hearings, 53138–53139

Committee for Purchase From People Who Are Blind or Severely Disabled
NOTICES
Procurement list; additions and deletions, 53140–53141

Committee for the Implementation of Textile Agreements
NOTICES
Cotton, wool, and man-made textiles:
Haiti, 53139–53140
Textile and apparel categories:
Silk blend and other vegetable fiber textile products from China; import limits, 53140

Customs Service
RULES
Customs brokers:
Permits; user fees, 53086

Defense Department
See Air Force Department
See Navy Department
RULES
Acquisition regulations:
Predetermined indirect cost rates for educational institutions, 53116
NOTICES
Agency information collection activities under OMB review, 53141–53142
Meetings:
Wage Committee, 53141

Drug Enforcement Administration
NOTICES
Applications, hearings, determinations, etc.:
Chester, Alvin A., M.D., 53208

Education Department
NOTICES
Agency information collection activities under OMB review, 53142–53143

Employment and Training Administration
NOTICES
Adjustment assistance:
BASF Corp. et al., 53208–53209
Benicia Industries, Inc., 53209
General Electric Co., 53209–53210
Adjustment assistance and NAFTA transitional adjustment assistance:
Miller Redwood Plywood et al., 53210–53212
NAFTA transitional adjustment assistance:
Bluestone Farming, Inc., et al., 53212–53213
Walker Manufacturing Co., 53213

Employment Standards Administration
NOTICES
Minimum wages for Federal and federally-assisted construction; general wage determination decisions, 53214–53215

Energy Department
See Energy Information Administration
See Federal Energy Regulatory Commission
See Hearings and Appeals Office, Energy Department
RULES
Grants and agreements administration:
Uniform administrative requirements and definitions; institutions of higher education, hospitals, and other non-profit institutions (OMB A–110), 53260–53283
NOTICES
Natural gas exportation and importation:
Amoco Canada Marketing Corp., 53158
Oryx Gas Marketing L.P., 53158–53159
Vector Energy (U.S.A.) Inc., 53159
Wascana Energy Marketing (U.S.) Inc., 53159

Westcoast Gas Services Inc., 53159
Western Gas Marketing Inc., 53159

Energy Information Administration
NOTICES
Agency information collection activities under OMB review, 53143–53144

Environmental Protection Agency
RULES
Air pollutants, hazardous; national emission standards:
Early reductions program high risk list, 53109–53110
PROPOSED RULES
Air quality implementation plans; approval and promulgation; various States:
California, 53128–53130
Michigan, 53128
Hazardous waste program authorizations:
Michigan, 53132–53133
Pesticides; tolerances in food, animal feeds, and raw agricultural commodities:
Cyfluthrin, 53130–53131
NOTICES
Confidential business information and data transfer to contractors, 53162–53163
Environmental statements; availability, etc.:
Agency statements—
Comment availability, 53163–53164
Weekly receipts, 53164
Meetings:
Particulate matter mortality epidemiological research; workshop, 53164–53165

Executive Office of the President
See Presidential Documents
See Science and Technology Policy Office

Farm Credit System Insurance Corporation
RULES
Privacy Act; implementation, 53083–53085

Farmers Home Administration
RULES
Program regulations:
Disaster set-aside program, 53079–53083

Federal Aviation Administration
RULES
Air carrier certification and operations:
Omnibus Transportation Employee Testing Act of 1991—
Alcohol misuse prevention program for personnel engaged in specified aviation activities, 53085–53086
PROPOSED RULES
Airmen certification:
Medical standards and certification procedures revision and medical certificate duration, 53226–53257
NOTICES
Advisory circulars; availability, etc.:
Part 23 airplanes—
Environmental and atmospheric conditions, and software assessment, 53221

Federal Communications Commission
RULES
Common carrier services:
Satellite communications—
Domestic satellite service; licensing policies and procedures, 53294–53331
Television broadcasting:
Cable Television Consumer Protection and Competition Act of 1992—
Rate regulation, 53113–53116
NOTICES
Agency information collection activities under OMB review, 53165–53184

Federal Deposit Insurance Corporation
NOTICES
Meetings; Sunshine Act, 53223

Federal Emergency Management Agency
RULES
Flood insurance; communities eligible for sale:
Illinois et al., 53110–53113

Federal Energy Regulatory Commission
NOTICES
Environmental statements; availability, etc.:
Paiute Pipeline Co., 53144–53146
Natural Gas Policy Act:
Self-implementing transactions, 53146–53155
State jurisdictional agencies tight formation recommendations; preliminary findings—
Louisiana Conservation Office, 53155
Preliminary permits surrender:
Carrob Energy Development, Inc., 53155
Applications, hearings, determinations, etc.:
ANR Pipeline Co., 53155–53156
Columbia Gulf Transmission Co. et al., 53156
Edison Electric Institute, 53156
Florida Gas Transmission Co., 53156–53157
GPM Gas Co., 53157
NorAm Gas Transmission Co., 53157–53158
Northern Natural Gas Co., 53158

Federal Highway Administration
NOTICES
Environmental statements; notice of intent:
San Francisco, CA, 53221–53222

Federal Maritime Commission
NOTICES
Agreements filed, etc., 53185

Federal Reserve System
NOTICES
Meetings; Sunshine Act, 53223

Financial Management Service
See Fiscal Service

Fiscal Service
PROPOSED RULES
FedSelect checks regulations, 53125–53128

Fish and Wildlife Service
RULES
Migratory bird hunting:
Migratory bird harvest information program, 53334–53336
PROPOSED RULES
Hunting and fishing:
Refuge-specific regulations
Bayou Cocodrie National Wildlife Refuge, LA, 53338–53340

NOTICES
Endangered and threatened species permit applications, 53203

Food and Drug Administration
NOTICES
Food additive petitions:
Morton International, Inc., 53193
Human drugs:
Export applications—
Cerezyme (imiglucerase for injection) 200 units/20 mL vial, 53193–53194
Climara estradiol transdermal system 3.9 milligram (mg) and 7.8 mg patches, 53194
Gemzar (gemcitabine hydrochloride) bulk drug or glass vials: 200 mg or 1 g (free base) per vial, 53194–53195

Forest Service
NOTICES
Environmental statements; availability, etc.:
Tongass National Forest, AK, 53135–53136

Health and Human Services Department
See Agency for Health Care Policy and Research
See Agency for Toxic Substances and Disease Registry
See Children and Families Administration
See Food and Drug Administration
See Health Care Financing Administration
See National Institutes of Health
See Public Health Service
See Social Security Administration

Health Care Financing Administration
NOTICES
Medicare:
Fiscal intermediaries and carriers—
Data, standards, and methodology (1995 FY budget), 53187–53193

Health Resources and Services Administration
See Public Health Service

Hearings and Appeals Office, Energy Department
NOTICES
Decisions and orders, 53159–53160, 53161–53162
Special refund procedures; implementation, 53160–53161

Housing and Urban Development Department
NOTICES
Grants and cooperative agreements: availability, etc.:
Facilities to assist homeless—
Excess and surplus Federal property, 53198–53200

Interior Department
See Fish and Wildlife Service
See Land Management Bureau
See Minerals Management Service
See Surface Mining Reclamation and Enforcement Office

Internal Revenue Service
RULES
Procedure and administration:
Property exempt from levy, 53087–53091
NOTICES
Organization, functions, and authority delegations:
Assistant Commissioner (Criminal Investigation) et al., 53222

International Trade Administration
NOTICES
Antidumping:
Electrolytic manganese dioxide from—
Japan, 53136–53137
Frozen concentrated orange juice from—
Brazil, 53137–53138

Interstate Commerce Commission
NOTICES
Motor carriers:
Agricultural cooperative transportation filing notices, 53203–53204
Compensated intercorporate hauling operations, 53204
Railroad operation, acquisition, construction, etc.:
Camp Chase Industrial Railroad Corp., 53204
Railroad services abandonment:
CSX Transportation, Inc., et al., 53204–53205

Justice Department
See Drug Enforcement Administration
See Prisons Bureau
NOTICES
Agency information collection activities under OMB review, 53205–53208

Labor Department
See Employment and Training Administration
See Employment Standards Administration

Land Management Bureau
NOTICES
Closure of public lands:
Colorado, 53200
Coal leases, exploration licenses, etc.:
Oklahoma, 53200–53202
Realty actions; sales, leases, etc.:
Wyoming, 53202–53203

Maritime Administration
NOTICES
Mortgagees and trustees; applicants approval, disapproval, etc.:
Bank of America Illinois, 53222
First Trust of New York, National Association, 53222

Minerals Management Service
RULES
Outer Continental Shelf; oil, gas, and sulphur operations:
Archaeological resource surveys and reports on Outer Continental Shelf lease tracts, 53091–53094

National Aeronautics and Space Administration
NOTICES
Patent licenses; non-exclusive, exclusive, or partially exclusive:
Wheel Ring, Inc., 53215

National Credit Union Administration
NOTICES
Meetings; Sunshine Act, 53223

National Institutes of Health
NOTICES
Meetings:
National Heart, Lung, and Blood Institute, 53195
National Institute of General Medical Sciences, 53195
Research Grants Division Advisory Committee, 53195–53196

Research Grants Division special emphasis panels, 53196

National Oceanic and Atmospheric Administration
RULES
Fishery conservation and management:
Bering Sea and Aleutian Islands groundfish, 53121
Gulf of Mexico and South Atlantic coastal migratory pelagic resources, 53120–53121
Gulf of Mexico and South Atlantic spiny lobster, 53118–53120
Pacific Halibut Commission, International:
Pacific halibut fisheries, 53117–53118
PROPOSED RULES
Fishery conservation and management:
Northeast multispecies, 53133–53134

Navy Department
RULES
Navigation, COLREGS compliance exemptions:
YTB 780 and YTB 789 (Large Harbor Tugs), 53097–53098

Nuclear Regulatory Commission
NOTICES
Applications, hearings, determinations, etc.:
Northeast Nuclear Energy Co., 53215–53216

Presidential Documents
PROCLAMATIONS
Special observances:
Character Counts Week, National (Proc. 6743), 53037
Country Music Month (Proc. 6742), 53035
Forest Products Week, National (Proc. 6744), 53039–53040
Penny Charity Week, National (Proc. 6745), 53041
White Cane Safety Day (Proc. 6741), 53033

Prisons Bureau
RULES
Inmate control, custody, care, etc.:
Drug abuse treatment programs, 53342–53345

Public Health Service
See Agency for Health Care Policy and Research
See Agency for Toxic Substances and Disease Registry
See Food and Drug Administration
See National Institutes of Health
NOTICES
Agency information collection activities under OMB review, 53196–53197
Meetings:
ICD–9–CM Coordination and Maintenance Committee, 53197
Prime vendor program information, 53197–53198
Organization, functions, and authority delegations:
Agency for Health Care Policy and Research, 53198

Research and Special Programs Administration
RULES
Hazardous materials:
Performance-oriented packaging standards—
Infectious substances, including regulated medical waste, 53116–53117

Rural Electrification Administration
RULES
Telecommunications standards and specifications:
Outside plant housings and serving area interface systems; specification, 53043–53079

Science and Technology Policy Office
NOTICES
Committees; establishment, renewal, termination, etc.:
National Bioethics Advisory Commission, 53217

Securities and Exchange Commission
NOTICES
Self-regulatory organizations; proposed rule changes:
American Stock Exchange, Inc., 53217–53220
Participants Trust Co., 53220–53221

Social Security Administration
NOTICES
Agency information collection activities under OMB review, 53198

Surface Mining Reclamation and Enforcement Office
RULES
Permanent program and abandoned mine land reclamation plan submissions:
Wyoming, 53094–53097
PROPOSED RULES
Permanent program and abandoned mine land reclamation plan submissions:
Ohio, 53122–53123
Utah, 53123–53125

Textile Agreements Implementation Committee
See Committee for the Implementation of Textile Agreements

Toxic Substances and Disease Registry Agency
See Agency for Toxic Substances and Disease Registry

Transportation Department
See Coast Guard
See Federal Aviation Administration
See Federal Highway Administration
See Maritime Administration
See Research and Special Programs Administration

Treasury Department
See Customs Service
See Fiscal Service
See Internal Revenue Service

Separate Parts In This Issue

Part II
Department of Transportation, Federal Aviation Administration, 53226–53257

Part III
Department of Energy, 53260–53283

Part IV
Department of Transportation, Coast Guard, 53286–53291

Part V
Federal Communications Commission, 53294–53331

Part VI
Department of the Interior, Fish and Wildlife Service, 53334–53336

Part VII
Department of the Interior, Fish and Wildlife Service, 53338–53340

Part VIII
Department of Justice, Bureau of Prisons, 53342–53345

Reader Aids
Additional information, including a list of public laws, telephone numbers, and finding aids, appears in the Reader Aids section at the end of this issue.

Electronic Bulletin Board
Free **Electronic Bulletin Board** service for Public Law numbers, **Federal Register** finding aids, and a list of documents on public inspection is available on 202–275–1538 or 275–0920.

CFR PARTS AFFECTED IN THIS ISSUE

A cumulative list of the parts affected this month can be found in the Reader Aids section at the end of this issue.

3 CFR
Proclamations:
6741 53033
6742 53035
6743 53037
6744 53039
6745 53041

7 CFR
1755 53043
1951 53079

10 CFR
600 53260

12 CFR
1403 53083

14 CFR
121 53085
Proposed Rules:
61 53226
67 53226

19 CFR
111 53086

26 CFR
301 53087

28 CFR
545 53342
550 53342

30 CFR
250 53091
256 53091
280 53091
281 53091
950 53094
Proposed Rules:
935 53122
944 53123

31 CFR
Proposed Rules:
247 53125

32 CFR
706 53097
806b 53098

33 CFR
155 53286
156 53286

40 CFR
63 53109
Proposed Rules:
52 (2 documents) 53128
180 53130
271 53132

44 CFR
64 53110

47 CFR
25 53294
76 53113
94 53294

48 CFR
216 53116
242 53116
252 53116

49 CFR
171 53116

50 CFR
20 53334
301 53117
640 53118
642 53120
675 53121
Proposed Rules:
32 53338
651 53133

Federal Register
Vol. 59, No. 203
Friday, October 21, 1994

Presidential Documents

Title 3—

The President

Proclamation 6741 of October 14, 1994

White Cane Safety Day, 1994

By the President of the United States of America

A Proclamation

At a time when nations around the world are embracing the blessings of democracy, human dignity, and freedom, it is fitting that Americans rededicate ourselves to protecting these rights for our own citizens.

White Cane Safety Day provides a special opportunity to reflect on the many accomplishments and contributions of Americans who are blind and visually impaired and to heighten public awareness of the symbolic strength of the white cane. For blind and visually impaired persons, the white cane represents access, opportunity, mobility, and safety. For everyone in the United States, the white cane reminds us that having a disability does not diminish one's right to take part in any aspect of society. The independence the white cane provides enables wider participation in the work force, in commerce, education, entertainment, and indeed in all aspects of the human experience.

We must remain vigilant in our efforts to ensure full access for blind and visually impaired persons and for others with disabilities. Our continuing efforts to implement fully and to enforce the requirements of the Americans with Disabilities Act of 1990, section 504 of the Rehabilitation Act of 1973, the Individuals with Disabilities Education Act of 1975, and other statutes serve to guarantee access and opportunity.

As we step up to meet the challenges of an increasingly fast-paced global economy, we must strive to foster the creative potential and the active participation of each one of our citizens. Only then will we truly enjoy the intelligence, energy, and initiative of every person. From exclusion to inclusion, from dependence to independence, from paternalism to empowermont—white canes across the country are marking the path toward success for all of us.

To recognize the accomplishments of individuals who are blind and visually impaired and to acknowledge the white cane and its many contributions to our society, the Congress, by joint resolution approved October 6, 1964, designated October 15 of each year as "White Cane Safety Day."

NOW, THEREFORE, I, WILLIAM J. CLINTON, President of the United States of America, do hereby proclaim October 15, 1994, as White Cane Safety Day. I call upon all Americans to observe this day with appropriate programs, ceremonies, and activities, as an expression of their support.

IN WITNESS WHEREOF, I have hereunto set my hand this fourteenth day of October, in the year of our Lord nineteen hundred and ninety-four, and of the Independence of the United States of America the two hundred and nineteenth.

William J. Clinton

[FR Doc. 94-26306
Filed 10-19-94; 1:37 pm]
Billing code 3195-01-P

Presidential Documents

Proclamation 6742 of October 14, 1994

Country Music Month, 1994

By the President of the United States of America

A Proclamation

Country music is a distinctly American treasure, drawing on the deepest cultural roots of our Nation's people. It reflects a storytelling impulse born of mountain balladry and cowboy songs. It combines an exciting instrumental texture of string bands and jazz orchestras, a heartfelt vocal style of religious and blues singing, and a contagious rhythm that inspires dancing in listeners of all ages.

The emotions of the myriad peaks and valleys of life find a vibrant voice in country music. Relating experiences all of us share, these songs boast a long and proud tradition in our national heritage. For the better part of our history, country music's many talented singers and songwriters from across the land have touched the hearts and minds of our citizens—rural and urban, rich and poor, young and old. Today, this wonderful art form is enjoyed and celebrated around the world as a uniquely American gift.

This month, we pause to commend and to appreciate the efforts of singers, songwriters, musicians, and all those in this thriving industry who work to maintain the vitality of the country music legacy.

The Congress, by Public Law 103–107, has designated October 1994 as "Country Music Month" and has authorized and requested the President to issue a proclamation in observance of this month. I urge all Americans to join me in recognizing the rich contributions that country music has made to our cultural heritage.

NOW, THEREFORE, I, WILLIAM J. CLINTON, President of the United States of America, do hereby proclaim October 1994 as Country Music Month.

IN WITNESS WHEREOF, I have hereunto set my hand this fourteenth day of October, in the year of our Lord nineteen hundred and ninety-four, and of the Independence of the United States of America the two hundred and nineteenth.

William J. Clinton

[FR Doc. 94–26307
Filed 10–19–94; 1:38 pm]
Billing code 3195–01–P

Presidential Documents

Proclamation 6743 of October 14, 1994

National Character Counts Week, 1994

By the President of the United States of America

A Proclamation

Our concern about character and ethics is one of the great strengths of our Nation. In 1994, America celebrates the continuing creation of and support for programs that, by definition, are character-building—from our proud military units and law enforcement groups to our new National Service program, AmeriCorps. As we seek to instill important values in a new generation of Americans, we must redouble our efforts to improve student learning, responsibility, and sense of belonging. We must revitalize the American ideal of community if our schools are to achieve their full potential. Adults, children, teachers—all of us must set an example. All of us can make a new beginning.

Schools need to emphasize the fundamentals: building character and creating a stronger sense of self-worth. The process of building moral values begins with the family, and we must all aid parents by demonstrating to our young people that hard work, honesty, and responsibility are essential in all of our endeavors. Passage of the "Goals 2000: Educate America Act" will, in the years ahead, give parents, teachers, and concerned citizens in every local school district the opportunity to come together to define what they want their schools to achieve for their children, not just through high academic standards, but also through setting high standards of compassion, understanding, and community involvement. New civic standards addressing the entire community, in addition to voluntary national standards, will serve as catalysts in this process, helping to better educate students to be more responsible citizens in the years to come.

To recognize the importance of character and to focus national attention on character building, the Congress, by Public Law 103–301, has designated October 16 through October 22, 1994, as "National Character Counts Week" and has authorized and requested the President to issue a proclamation in observance of this commemoration.

NOW, THEREFORE, I, WILLIAM J. CLINTON, President of the United States of America, do hereby proclaim October 16 through October 22, 1994 as National Character Counts Week. I call upon the people of the United States, government officials, educators, and volunteers, to observe this week with appropriate programs, ceremonies, and activities.

IN WITNESS WHEREOF, I have hereunto set my hand this fourteenth day of October, in the year of our Lord nineteen hundred and ninety-four, and of the Independence of the United States of America the two hundred and nineteenth.

William J. Clinton

[FR Doc. 94–26308
Filed 10–19–94; 1:40 pm]
Billing code 3195–01–P

Presidential Documents

Proclamation 6744 of October 14, 1994

National Forest Products Week, 1994

By the President of the United States of America

A Proclamation

America's National Forests grace more than 191 million acres of our land. Thirty-four million of those acres are part of our wilderness preservation system, which works to safeguard this invaluable resource for future use and enjoyment. The American National Forests are among our country's greatest gifts—gifts we share with all of Earth's creatures today and with generations of new life to come.

One of our Nation's foremost priorities must be to ensure that forest ecosystems are maintained and protected. With proper care, these precious lands can remain healthy, diverse, and resilient. We are moving toward a new era in the stewardship of public lands. Today, we recognize the importance of taking a comprehensive approach—one that balances the needs of our people and of the environment. Grounded in sound science and compliance with existing law, sustainable forest management presents our best hope for saving the more than 250 threatened or endangered species of fish, animals, and plants that have made this land their home. At the same time, such management efforts offer our best chance for building a lasting and productive economic base for the people who have made this land their life and livelihood.

America's National Forests provide for our Nation in countless ways—from the houses we live in to the newspapers we read to our spiritual and physical well-being—the splendor and glory of nature's gift to America enriches our daily lives immeasurably. National Forest visitors enjoy more than 4,300 miles of wild and scenic rivers for fishing, swimming, or just taking in the view. Wood and paper products from forests are our country's leading renewable natural resource, accounting for about 4.2 percent of our Gross Domestic Product and 8.5 percent of all manufacturing in the United States, and supporting more than 1.7 million American workers. Taxol, taken from the bark of certain trees, has been found effective in treating some forms of cancer. Althea, balsam gum, dill oil, and Indian breadroot are just a few examples of products used for medicinal purposes. Beargrass and white birch bark are used for basketmaking and chair caning. Dandelion, fern, and salmonberry shoots are used for cooking spices, aromatics, animal bedding, and for dyes and tanning that are a source of income for citizens across the country.

In recognition of the central role our forests play in the long-term welfare of our Nation, the Congress, by Public Law 86–753 (36 U.S.C. 163), has designated the week beginning on the third Sunday in October of each year as "National Forest Products Week" and has authorized and requested the President to issue a proclamation in observance of this week.

NOW, THEREFORE, I, WILLIAM J. CLINTON, President of the United States of America, do hereby proclaim the week beginning October 16, 1994, as National Forest Products Week and call upon all Americans to observe this week with appropriate ceremonies and activities.

IN WITNESS WHEREOF, I have hereunto set my hand this fourteenth day of October, in the year of our Lord nineteen hundred and ninety-four, and of the Independence of the United States of America the two hundred and nineteenth.

William J. Clinton

[FR Doc. 94-26309
Filed 10-19-94; 1:41 pm]
Billing code 3195-01-P

Presidential Documents

Proclamation 6745 of October 14, 1994

National Penny Charity Week, 1994

By the President of the United States of America

A Proclamation

Individual acts of kindness are the currency of social change. Combined with others and directed toward a worthwhile cause, these efforts exemplify the spirit of volunteerism. Inspired by just such a vision of service, organizations throughout the country are coming together this week to recycle pennies for charitable causes.

The penny is the most widely used of the denominations currently in circulation, but pennies too often rest idle in piggy banks and dresser drawers. The U.S. Mint—which will produce another 13.3 billion pennies this year to meet demands—joins me in encouraging citizens to help return pennies to circulation.

With the holiday season approaching, this is a better time than ever to remember those who are in need of a helping hand. By contributing pennies to charities and worthy community causes, we can make this season a little brighter for our fellow citizens and truly make every penny count.

The Congress, by House Joint Resolution 415, has designated the week of October 16, 1994, as "National Penny Charity Week" and has authorized and requested the President to issue a proclamation in observance of this week.

NOW, THEREFORE, I, WILLIAM J. CLINTON, President of the United States of America, do hereby proclaim the week of October 16, 1994, as National Penny Charity Week. I urge all Americans to observe this week with appropriate ceremonies and activities, including the donation of pennies to charities, particularly those that provide direct services to our Nation's underprivileged and disadvantaged population, and to worthy community causes.

IN WITNESS WHEREOF, I have hereunto set my hand this fourteenth day of October, in the year of our Lord nineteen hundred and ninety-four, and of the Independence of the United States of America the two hundred and nineteenth.

William J. Clinton

[FR Doc. 94-26310
Filed 10-19-94; 1:42 pm
Billing code 3195-01-P

Rules and Regulations

Federal Register
Vol. 59, No. 203
Friday, October 21, 1994

This section of the FEDERAL REGISTER contains regulatory documents having general applicability and legal effect, most of which are keyed to and codified in the Code of Federal Regulations, which is published under 50 titles pursuant to 44 U.S.C. 1510.

The Code of Federal Regulations is sold by the Superintendent of Documents. Prices of new books are listed in the first FEDERAL REGISTER issue of each week.

DEPARTMENT OF AGRICULTURE

Rural Electrification Administration

7 CFR Part 1755

Specification for Outside Plant Housings and Serving Area Interface Systems

AGENCY: Rural Electrification Administration, USDA.

ACTION: Final rule.

SUMMARY: The Rural Electrification Administration (REA) is amending its regulations on telecommunications standards and specification for materials, equipment and construction by codifying REA's specification for outside plant housings and serving area interface systems. The new specification informs manufacturers and users of outside plant housings and serving area interface systems of the engineering and technical requirements that are considered necessary for satisfactory performance in outside plant environments. A significant requirement of the specification involves the changing of the bonding and grounding system associated with outside plant housings from a 14 gauge system to a 6 gauge system. The change to the 6 gauge bonding and grounding system will help to assure that REA housings will be manufactured in compliance with recognized industry safety standards which will result in improved electrical protection of outside plant telephone equipment, craft personnel, and the public to hazardous voltages.

DATES: *Effective date:* November 21, 1994.

Compliance date: Manufacturers of outside plant housings and serving area interface systems will be allowed until July 21, 1995, to supply borrowers with products already produced or currently in the process of manufacturing.

Incorporation by reference: Incorporation by reference of certain publications listed in this final rule is approved by the Director of the Federal Register as of November 21, 1994.

FOR FURTHER INFORMATION CONTACT: Garnett G. Adams, Chief, Outside Plant Branch, Telecommunications Standards Division, Rural Electrification Administration, room 2844, South Building, U.S. Department of Agriculture, Washington, DC 20250–1500, telephone number (202) 720–0667.

SUPPLEMENTARY INFORMATION:

Executive Order 12866

This final rule has been determined to be not significant for the purposes of Executive Order 12866 and therefore has not been reviewed by the Office of Management and Budget.

Regulatory Flexibility Act Certification

The Administrator of REA has determined that this final rule will not have a significant impact on a substantial number of small entities, as defined by the Regulatory Flexibility Act (5 U.S.C. 601 *et seq.*). This final rule involves standards and specifications, which may increase the direct short term costs to REA borrowers. However, the long-term direct economic costs are reduced through greater durability and lower maintenance over time.

Information Collection and Recordkeeping Requirements

In compliance with the Office of Management and Budget (OMB) regulations (5 CFR part 1320) which implements the Paperwork Reduction Act of 1980 (Pub. L. 96–511) and section 3504 of that Act, the information collection and recordkeeping requirements contained in this final rule have been approved by OMB under control number 0572–0059. Comments concerning these requirements should be directed to the Office of Information and Regulatory Affairs of OMB, Attention: Desk Officer for USDA, room 10102, NEOB, Washington, DC, 20503.

National Environmental Policy Act Certification

The Administrator of REA, has determined that this final rule will not significantly affect the quality of the human environment as defined by the National Environmental Policy Act of 1969 (42 U.S.C. 4321 *et seq.*). Therefore, this action does not require an environmental impact statement or assessment.

Catalog of Federal Domestic Assistance

The program described by this final rule is listed in the Catalog of Federal Domestic Assistance Programs under No. 10.851, Rural Telephone Loans and Loan Guarantees, and No. 10.852, Rural Telephone Bank Loans. This catalog is available on a subscription basis from the Superintendent of Documents, the United States Government Printing Office, Washington, DC 20402.

Executive Order 12372

This final rule is excluded from the scope of Executive Order 12372, Intergovernmental Consultation that requires intergovernmental consultation with state and local officials. A Notice of Final rule titled Department Programs and Activities Excluded From Executive Order 12372 (50 FR 47034) exempts REA and RTB loans and loan guarantees, and RTB bank loans, to governmental and nongovernmental entities from coverage under this Order.

Executive Order 12778

This final rule has been reviewed under Executive Order 12778, Civil Justice Reform. If adopted, this final rule will not: (1) Preempt any State or local laws, regulations, or policies; (2) Have any retroactive effect; and (3) Require administrative proceedings before parties may file suit challenging the provisions of this rule.

Background

REA issues publications titled "Bulletin" which serve to guide borrowers regarding already codified policy, procedures, and requirements needed to manage loans, loan guarantee programs, and the security instruments which provide for and secure REA financing. REA issues standards and specifications for the construction of telephone facilities financed with REA loan funds.

REA has rescinded REA Bulletin 345–26, REA Specification for Buried Plant Housings, PE–35, dated July 23, 1976, and REA Bulletin 345–77, REA Specification for Serving Area Interface Housings, PE–79, dated January 24, 1978. REA is incorporating and updating the information previously contained in those bulletins in 7 CFR 1755.910, REA Specification for Outside

Plant Housings and Serving Area Interface Systems.

The specification contains mechanical, electrical, and environmental requirements, desired design features, and test methods for evaluation of outside plant housings and serving area interface systems.

The test procedures described in the specification are required to demonstrate the functional reliability of outside plant housings and serving area interface systems. The test procedures satisfy the requirements of housings as well as the requirements of terminals that may be installed within housings.

Outside plant housings are fabricated of either metallic or nonmetallic materials in different sizes and configurations to suit a variety of applications. The purpose of a housing is to protect its contents from environmental elements, rodents, insects, or vandalism and unauthorized access. Outside plant housings accommodate cable splices, bonding and grounding connections, cable terminals, cross-connect facilities, load coils, and optical and electronic equipment.

Serving area interface systems serve as the connecting terminal between feeder cable and distribution cables.

A significant requirement of 7 CFR 1755.910 involves the changing of the bonding and grounding system of outside plant housings from a 14 gauge system to a 6 gauge system. The change to the 6 gauge bonding and grounding system in the housings will help to assure that REA housings will be manufactured in compliance with recognized industry safety standards that are considered critical to the protection of outside plant telephone equipment, craft personnel, and the public.

Comments

On September 1, 1993, REA published a proposed rule at 58 FR 46110 on 7 CFR 1755.910, REA Specification for Outside Plant Housings and Serving Area Interface Systems. Comments on this proposed rule were due October 1, 1993. Comments and recommendations were received from several companies by this date. The comments, recommendations and responses are summarized as follows:

One respondent recommended that paragraph (d)(3)(xxx) of this section be changed to allow the use of locknuts as well as nuts with captive lock washers.

Response: REA has reviewed the recommendation. The requirement for the captive studs and nuts with captive lock washers was initiated in a letter to all Telephone Borrowers by Mr. Michael M.F. Liu, Acting Administrator, dated April 24, 1992. Captive studs and nuts with captive lock washers replaced the spade clip and terminal as the means for grounding and have proven to be very efficient. Because of concern that the locknut will become loose after repeated lifting of ground connections on cables that require frequent locating, REA will not change the requirement in this paragraph.

One respondent recommended that paragraph (d)(6)(v) be modified to add color 4.4GY 6.74/1.5 under the gray-green color.

Response: REA has reviewed the recommendation and as a result of the review will add color 4.4GY 6.74/1.5 under the gray-green color as proposed by the commenter.

Several clarifying and editorial changes in paragraphs (d)(3)(v), (d)(3)(vii), and (d)(3)(xiii) were made in response to comments from two respondents. These changes did not alter the intent or technical requirements of the affected paragraphs.

List of Subjects in 7 CFR Part 1755

Incorporation by reference, Loan programs—communications, Reporting and recordkeeping requirements, Rural areas, Telephone.

For reasons set out in the preamble, REA is amending chapter XVII of title 7 of the Code of Federal Regulations as follows:

PART 1755—TELECOMMUNICATIONS STANDARDS AND SPECIFICATIONS FOR MATERIALS, EQUIPMENT AND CONSTRUCTION

1. The authority citation for part 1755 continues to read as follows:

Authority: 7 U.S.C. 901 *et seq.*, 1921 *et seq.*

2. Section 1755.98 is amended by adding a new entry to the table in numerical order to read as follows:

§ 1755.98 List of telephone standards and specifications included in other 7 CFR parts.

* * * * *

Section	Issue date	Title
*	*	*
1755.910	November 21, 1994	REA Specification for Outside Plant Housings and Serving Area Interface Systems.

3. Section 1755.910 is added to read as follows:

§ 1755.910 REA specification for outside plant housings and serving area interface systems.

(a) *Scope.* (1) The purpose of this specification is to inform manufacturers and users of outside plant housings and serving area interface (SAI) systems of the engineering and technical requirements that are considered necessary for satisfactory performance in outside plant environments. Included are the mechanical, electrical, and environmental requirements, desired design features, and test methods for evaluation of the product.

(2) The housing and terminal requirements reflect the best engineering judgment available at the present time and may be subject to change due to advances in technology, economic conditions, or other factors.

(3) The test procedures described in this section are required by REA to demonstrate the functional reliability of the product. However, other standard or unique test procedures may serve the same function. In such cases, REA shall evaluate the test procedures and results on an individual basis.

(4) The test procedures specified herein satisfy the requirements of housings as well as the requirements of terminals that may be installed within housings. Some of the requirements are interrelated to several tests designed to determine the performance aspects of terminals and are directly affected by testing required for housings. Therefore, the manufacturer should carefully review all the test requirements in order to develop a testing schedule that is comprehensive, efficient in terms of the number of test specimens required and can be accomplished in an orderly and logical sequence.

(5) The specified tests may require special facilities to comply with Federal, State, or local regulatory requirements. Some test procedures are potentially hazardous to personnel because of the high voltages and mechanical forces involved. Safety precautions are necessary to prevent injury.

(6) Underwriters Laboratories, Inc. (UL) 94, Tests for Flammability of Plastic Materials for Parts in Devices and Appliances, fourth edition, dated June 18, 1991, referenced in this section is incorporated by reference by REA. This incorporation by reference was approved by the Director of the Federal Register in accordance with 5 U.S.C. 552(a) and 1 CFR part 51. A copy of the UL standard is available for inspection during normal business hours at REA, room 2845–S, U.S. Department of Agriculture, Washington, DC 20250–1500 or at the Office of the Federal

Register, 800 North Capitol Street, NW., suite 700, Washington, DC. Copies are available from UL Inc., 333 Pfingsten Road, Northbrook, Illinois 60062–2096, telephone number (708) 272–8800.

(7) The American Society for Testing and Materials Specifications (ASTM) A 109–91, Standard Specification for Steel, Strip, Carbon, Cold-Rolled; ASTM A 153–82 (Reapproved 1987), Standard Specification for Zinc Coating (Hot-Dip) on Iron and Steel Hardware; ASTM A 366/A 366M–91, Standard Specification for Steel, Sheet, Carbon, Cold-Rolled, Commercial Quality; ASTM A 525–91b, Standard Specification for General Requirements for Steel Sheet, Zinc-Coated (Galvanized) by the Hot-Dip Process; ASTM A 526/A 526M–90, Standard Specification for Steel Sheet, Zinc-Coated (Galvanized) by the Hot-Dip Process, Commercial Quality; ASTM A 569/A 569M–91a, Standard Specification for Steel, Carbon (0.15 Maximum, Percent), Hot-Rolled Sheet and Strip Commercial Quality; ASTM A 621/A 621M–92, Standard Specification for Steel, Sheet and Strip, Carbon, Hot-Rolled, Drawing Quality; ASTM B 117–90, Standard Test Method of Salt Spray (Fog) Testing; ASTM B 539–90, Standard Test Methods for Measuring Contact Resistance of Electrical Connections (Static Contacts); ASTM B 633–85, Standard Specification for Electrodeposited Coatings of Zinc on Iron and Steel; ASTM D 523–89, Standard Test Method for Specular Gloss; ASTM D 610–85 (Reapproved 1989), Standard Test Method for Evaluating Degree of Rusting on Painted Steel Surfaces; ASTM D 822–89, Standard Practice for Conducting Tests on Paint and Related Coatings and Materials using Filtered Open-Flame Carbon-Arc Light and Water Exposure Apparatus; ASTM D 1535–89, Standard Test Method for Specifying Color by the Munsell System; ASTM D 1654–92, Standard Test Method for Evaluation of Painted or Coated Specimens Subjected to Corrosive Environments; ASTM D 1693–70 (Reapproved 1988), Standard Test Method for Environmental Stress-Cracking of Ethylene Plastics; ASTM D 2197–86 (Reapproved 1991), Standard Test Method for Adhesion of Organic Coatings by Scrape Adhesion; ASTM D 2247–92, Standard Practice for Testing Water Resistance of Coatings in 100% Relative Humidity; ASTM D 2565–92, Standard Practice for Operating Xenon Arc-Type Light-Exposure Apparatus With and Without Water for Exposure of Plastics; ASTM D 2794–92, Standard Test Method for Resistance of Organic Coatings to the Effects of Rapid Deformation (Impact); ASTM D 3928–89, Standard Test Method for Evaluation of Gloss or Sheen Uniformity; ASTM D 4568–86, Standard Test Methods for Evaluating Compatibility Between Cable Filling and Flooding Compounds and Polyolefin Cable Materials; ASTM G 21–90, Standard Practice for Determining Resistance of Synthetic Polymeric Materials to Fungi; and ASTM G 23–90, Standard Practice for Operating Light-Exposure Apparatus (Carbon-Arc Type) With and Without Water for Exposure of Nonmetallic Materials, referenced in this section are incorporated by reference by REA. These incorporations by references were approved by the Director of the Federal Register in accordance with 5 U.S.C. 552(a) and 7 CFR part 51. Copies of the ASTM standards are available for inspection during normal business hours at REA, room 2845–S, U.S. Department of Agriculture, Washington, DC 20250–1500 or at the Office of the Federal Register, 800 North Capitol Street, NW., suite 700, Washington, DC. Copies are available from ASTM, 1916 Race Street, Philadelphia, Pennsylvania 19103–1187, telephone number (215) 299–5585.

(b) *General information.* (1) Outside plant housings are fabricated of either metallic or nonmetallic materials in different sizes and configurations to suit a variety of applications. The purpose of a housing is to protect its contents from environmental elements, rodents, insects, or vandalism and unauthorized access. Housings are designed with internal brackets for accommodating splicing, bonding and grounding connections, cable terminals, cross-connect facilities, load coils, and optical and electronic equipment.

(2) Pedestals are housings primarily intended to house, organize, and protect cable terminations incorporating terminal blocks, splice connectors and modules, ground lugs and load coils. Activities typically performed in a pedestal are cable splicing, shield bonding and grounding, inductive loading, and connection of subscriber drops.

(3) Serving area interface (SAI) cabinets are housings intended to perform some of the same functions as pedestals but are primarily intended to serve as the connecting terminal between feeder cable and distribution cables.

(4) Outside plant housings shall be manufactured in accordance with National Electrical Code (NEC) requirements, Underwriters' Laboratories (UL) requirements, Department of Labor, Occupational Safety and Health Administration Standards (OSHA), and all other applicable Federal, State, and local requirements including, but not limited to, statutes, rules, regulations, orders, or ordinances otherwise imposed by law.

(c) *General documentation requirements*—(1) *Installation and maintenance instructions.* (i) Each product shall have available a set of instructions designed to provide sufficient information for the successful installation of the housing, cables, auxiliary equipment, and the associated splice preparation. The instructions shall be of sufficient size to be easily read and shall be printed using waterproof ink. Pedestal instruction sheets shall include a list of miscellaneous replacement parts that may be purchased locally. SAI systems shall be supplied with complete instructions for installation and use.

(ii) When requested by REA, or an REA borrower, the manufacturer shall prepare a training package for the purpose of training technicians in the use and installation of the product and its auxiliary equipment.

(iii) The manufacturer shall provide ordering information for repair parts. Repair parts shall be obtainable through a local distributor or shall be easily obtainable. Information describing equivalent parts and their sources should be provided for those parts that may also be obtained from other sources.

(2) *Quality assurance.* The manufacturer shall demonstrate the existence of an ongoing quality assurance program that includes controls, procedures, and standards used for vendor certification, source inspection, incoming inspection, manufacture, in process testing, calibration and maintenance of tools and test equipment, final product inspection and testing, periodic qualification testing and control of nonconforming materials and products. The manufacturer shall maintain quality assurance records for five years.

(3) *REA acceptance applications.* (i) The tests described in this specification are required for acceptance of product designs and major modifications of accepted designs. All modifications shall be considered major unless otherwise declared by REA. The tests are intended to show the inherent capability of the manufacturer to produce products which have an expected service life of 30 years.

(ii) For initial acceptance the manufacturer shall:

(A) Submit an original signature certification that the product complies with each section of the specification;

(B) Provide qualification test data;

(C) Provide OSHA Material Safety Data Sheets for the product;

(D) Provide a detailed explanation concerning the intended use and capacity of the product;

(E) Provide a complete set of instructions, recommendations for equipment organization and splicing;

(F) Agree to periodic plant inspections;

(G) Provide a certification that the product does or does not comply with the domestic origin manufacturing provisions of the "Buy American" requirements of the Rural Electrification Act of 1938 (52 Stat. 818);

(H) Provide user testimonials concerning field performance of the product;

(I) Provide product samples if requested by REA; and

(J) Provide any other data required by the Chief, Outside Plant Branch (Telephone).

(iii) Each requirement of this section must be addressed in submissions for acceptance. The designation N/A may be entered when the requirements do not apply.

(iv) Acceptance requests should be addressed to: Chairman, Technical Standards, Committee "A" (Telephone), Telecommunications Standards Division, Rural Electrification Administration, Washington, DC 20250–1500.

(d) *Functional design criteria for housings*—(1) *General requirements.* (i) The functional requirements for housings concern materials, finishes, environmental factors, and design features that are applicable to most above ground housings used in the outside plant.

(ii) Housings shall be of sufficient size to permit easily managed installation, operational, testing, and maintenance operations. The general shape of outside plant housings is usually comparable to that of a rectangular column or cylinder, with the shape of any particular housing being left to the manufacturer's discretion. Each design is subject to acceptance by REA.

(2) *Housing types and capacities.* (i) Housings used in outside plant are either the smaller housings generally known as pedestals or larger housings known as equipment or splice cabinets. Both categories may have designs intended for stake mounting, pole mounting, or pad mounting.

(ii) The classifications of pedestals are the general purpose channel Type (H) and the dome Type (M). The Type H pedestal has either front only access or back and front access while the Type M pedestal has top only access. Pedestals are further designated as follows:

Stake mounted	Type	Pole mounted	Pole mounted (extra high)
BD3	H	BD3A	
BD4	H	BD4A	
BD5	H	BD5A	
BD7	H	BD7A	
BD14	M	BD14A	BD14AG
BD15	M	BD15A	BD15AG
BD16	M	BD16A	BD16AG

(iii) The minimum volume associated with the pedestal designations shall be as shown in the following table:

Pedestal[1] housing designation	Minimum volume	
	Cubic centimeters cm^3	(Cubic Inches) ($in.^3$)
BD3, BD3A [2]	9,000	(550)
BD4, BD4A [2]	15,000	(900)
BD5, BD5A [2]	35,000	(2,100)
BD7([2])	72,000	(4,400)
BD14, BD14A, BD14AG [3]	9,000	(550)
BD15, BD15A, BD15AG [3]	27,000	(1,600)
BD16, BD16A, BD16AG [3]	38,000	(2,300)

Note 1: Housings designed for unique purposes will be evaluated on a case-by-case basis.

Note 2: For Type H pedestals, the minimum volume is that space as measured 5 centimeters (cm) (2 inches (in.)) below the top of the housing to a point 40 cm (16 in.) above the bottom of the lower cover plate.

Note 3: The minimum volume of the Type M pedestals shall be the space within the dome measured from the lower edge of the dome to a point 5 cm (2 in.) from the top.

(iv) Equipment cabinets intended for use as SAI housings shall be assigned size designations according to their maximum pair termination capacities. The capacity will vary depending on the type of terminating equipment used. SAI cabinets shall be suffix designated with an "A" for pole mounting, "X" for pad mounting, and "S" for stake mounting.

(v) Large pair count splice cabinets are classified according to their splice capacity. Approximately 48 cm^3 (3.0 $in.^3$) of splice area per pair straight spliced shall be permitted.

(vi) The minimum volume associated with large pair count splice cabinets shall be as shown in the following table:

Splice cabinet[1] designation	Minimum volume		Maximum splice capacity (pairs)
	($cm.^3$)	($in.^3$)	
BD6000	295,000	(18,000)	6,000
BD8000	393,000	(24,000)	8,000
BD10000	491,000	(30,000)	10,000

Note 1: Additional sizes of splice cabinets shall be considered by REA on a case-by-case basis.

(3) *Design and fabrication requirements for housings.* (i) Type H pedestal housings may consist of an enclosed channel incorporating an integrally mounted stake that serves as a backplate, or they may be designed for universal mounting on stakes or poles. The body of the housing shall have two major components; an upper cover and a base cover. The upper cover shall have a top, front and back plate with the front cover removable to permit entry and provide increased work space. The base cover shall consist of a front plate and back plate. The base cover back plate may be an extension of the upper back plate cover.

(ii) Type M pedestal housings shall consist of a one piece upper sleeve designed to fit over the base cover trapping air to prohibit water from entering the splice area when installed in locations prone to temporary flooding. Pedestals designed to be mounted extra high on poles for locations susceptible to deep snow shall have a bottom close-off option available to prohibit the ingress of birds, rodents and insects.

(iii) The external housing components on all outside plant housings shall provide reasonable protection against accidental removal or vandalism. Housings shall be equipped with a cover plate retaining bolt and cup washer that may be opened only with an industry accepted socket type can wrench. Housings may be equipped with provisions to allow the purchaser to install a padlock.

(iv) Installed housings shall resist the disassembling force of frost heaving applied to the bottom of ground line cover plates. The base cover must remain stationary to stabilize the contents of the housing cavity.

(v) In an effort to provide protection against dust penetration, blowing snow, rain, and ultraviolet light degradation of internal components, all mechanical gaps shall be restricted. The use of seals, overlaps, gaskets, and/or dovetailing is required to assure satisfactory protection of housed equipment.

(vi) Knockouts, cutouts, or notches designed to accommodate aerial service drops shall not be permitted. A design option for housings intended to accommodate service drops shall

include a separate channel or equivalent in the base cover to allow future additions of service drops without the removal of gravel or the moisture barrier in the base of the housing. Service wire channels must be designed to prevent the entry of birds, reptiles, rodents and insects.

(vii) Minimal venting of SAI housings may be necessary to relieve internal pressure and condensation.

(viii) There shall be no aluminum housing components that will become buried in the soil when the housing is properly installed.

(ix) Housing components may be assembled using rivets, welds, glue, bolts and nuts, or other techniques suitable for the materials involved.

(x) Housings and their components that require field assembly must be capable of being assembled with tools normally available to outside plant technicians.

(xi) Hinged doors on SAI housings and large pair count splice housings shall be equipped with a device that restrains the doors in the open position.

(xii) Outside plant housings shall be free of sharp edges, burrs, etc., that could present a safety hazard to personnel involved in installation and use of the product or to the general public. Surfaces inside housings must not allow pinching of conductors during installation of cover plates or the opening and closing of doors.

(xiii) A ground line mark shall be provided, approximately 15 cm (6 in.) below the top edge of the housing base cover plate on housings intended for ground level mounting. Base cover plates shall have a minimum height of 31 cm (12 in.).

(xiv) Any housing, which weighs in excess of 91 kilograms (kg) (200 pounds (lb)), including its contents, shall be equipped with lifting brackets for attaching hoisting cables or chains.

(xv) Housing stakes shall be a minimum of 107 cm (42 in.) in length. If fabricated from steel, they shall have a minimum thickness of No. 13 gauge as measured according to American Society for Testing and Materials (ASTM) A 525–91b. Stakes shall be formed into a "U" channel with a minimum depth of 2 cm (0.75 in.). The stake shall be a single part of suitable design strength for driving 91 cm (36 in.) into the soil with hand tools without damage such as bending or warping. The stake shall have adequate mounting holes having a minimum separation of 15 cm (6 in.) for mounting the housing baseplate. The stake material must resist corrosion and deterioration when exposed to soil and atmospheric conditions.

(xvi) The housing design must permit a logical progression of installation steps that would normally be encountered in typical field installations.

(xvii) Provisions for attaching housings to stakes, poles, walls, other housings, or pads shall be provided for each design intended for those purposes. Locations of holes for mounting attachments may be provided by knockouts on above ground components. Mounting hole locations for below ground components may be predrilled.

(xviii) Pole mounting hardware shall provide at least 1.3 cm (0.5 in.) clearance from the pole to the housing. Pole mounting brackets shall accommodate the wide range of pole sizes used in the telephone industry.

(xix) Pad-mounted housings shall have hardware available for anchoring the housing base to the pad. A template may be provided to assist in the location of mounting attachment details for pad preparation.

(xx) Housings equipped with stub cables shall have strain relief devices to permit shipping and handling of the housing without damage to the housing or stub cables. Only REA accepted cable shall be used for stub cables. The cable manufacturer's recommendations concerning minimum bend radius shall be observed. The minimum bend radius for most copper cables is 10 times the cable diameter.

(xxi) Cable supports shall be provided near the top of the ground line cover and other appropriate locations within the housing to provide cable stability consistent with the intended use and capacity of the housing. Cable supports shall be capable of holding a minimum load of 23 kg (50 lb).

(xxii) An adequate supply of nonmetallic retainer clips or tie wraps capable of supporting a minimum load of 23 kg (50 lb) shall be provided with the housing. Adequate spaces for installation of the clips or tie wraps must be provided on the housing backplate and cable supports.

(xxiii) Housing chambers designed for splicing operations shall be equipped with insulated supporting straps or rods suitable for supporting splice bundles. The insulation on the straps or rods shall extend for the entire length of the device and shall have a dielectric strength of 15 kilovolts (kv) direct current (dc) minimum. Housings having an "H" frame design where both front and rear covers may be removed may incorporate insulated tie bars to be used as cable supports.

(xxiv) Housings designed to contain equipment in addition to splices shall be equipped with a device for physically separating the splice area from the service area of the housing.

(xxv) A dielectric shield rated at 15 kv dc shall be provided to enclose the cable splice area. The shield shall extend from the lower cable supports to within 2.5 cm (1 in.) of the top of the housing. The shield shall be equipped with Velcro or equivalent fastening devices designed to hold the shield in both the open or closed positions. The fastening devices shall extend along the entire vertical edge of the dielectric shield.

(xxvi) Mounting arrangements for a variety of terminal blocks and other equipment shall be provided by means of good housekeeping panels or other devices that may enhance the service aspect of the housing.

(xxvii) Housings designed for SAI cabinets may be shipped with terminal blocks installed and stub cables attached. If this option is exercised, the stub cables and terminal blocks must be REA accepted. In all cases, SAI cabinets must be equipped with appropriate mounting devices for installing the peripheral equipment required for a serving area interface.

(xxviii) SAI cabinets shall be designed to provide physical separation between the splicing area and the area provided for running cross-connect jumpers.

(xxix) SAI cabinets and large splice housings must have an external feature for attaching a padlock to prevent unauthorized entry.

(xxx) Each housing shall have a tinned or zinc electroplated copper alloy or equivalent connector plate or bar to be used for terminating ground and cable shield bond connections. The device shall be equipped with captive studs and nuts with captive lock washers designed for attaching 6 American Wire Gauge (AWG) copper bonding harness wire or braid and a 6 AWG copper ground wire. Connector plates shall be equipped with enough studs and nuts to provide individual connections equivalent to the maximum number of cable sheaths recommended for the housing. Housings shall incorporate design features that enable the field installation of at least one additional connector plate for service conditions that require numerous connections. A bonding and grounding system capable of providing support and strain relief for service wires shall be provided for housings intended for use as distribution points. The bonding system shall be designed to provide sheath continuity as cable and service wires are installed, and prior to any other operation being performed. The bonding arrangement shall provide electrical continuity between all bonds

and the ground connector plate. The bonding and grounding arrangement shall permit the lifting of individual cable ground connections for testing and cable locating activities without jeopardizing the grounding potential of other cables that may enter the housing. The bonding and grounding system shall be capable of conducting a current of 1000 amperes for at least 20 seconds.

(4) *Warning sign.* (i) A buried cable warning sign shall be securely attached to the outside of each housing. The lettering information on the sign shall be permanent.

(ii) For pedestals, the sign shall be centered horizontally on the front cover and the top of the sign shall be not more than 10 cm (4 in.) from the top of the housing.

(iii) For SAI cabinets, the sign shall be centered horizontally and vertically on the door. If there are two doors, the sign shall be mounted on the left door.

(iv) Deviations from warning sign location requirements are permitted only for housing design constraints. Alternate sign locations will be considered by REA.

(v) The REA standard sign design is shown in Figure 1.

(5) *Housing materials.* (i) Materials used in housings shall present no environmental or safety hazard as defined by industry standards or Federal, State, or local laws and regulations. Figure 1 is as follows:

BILLING CODE 3410-15-P

FIGURE 1

WARNING SIGN

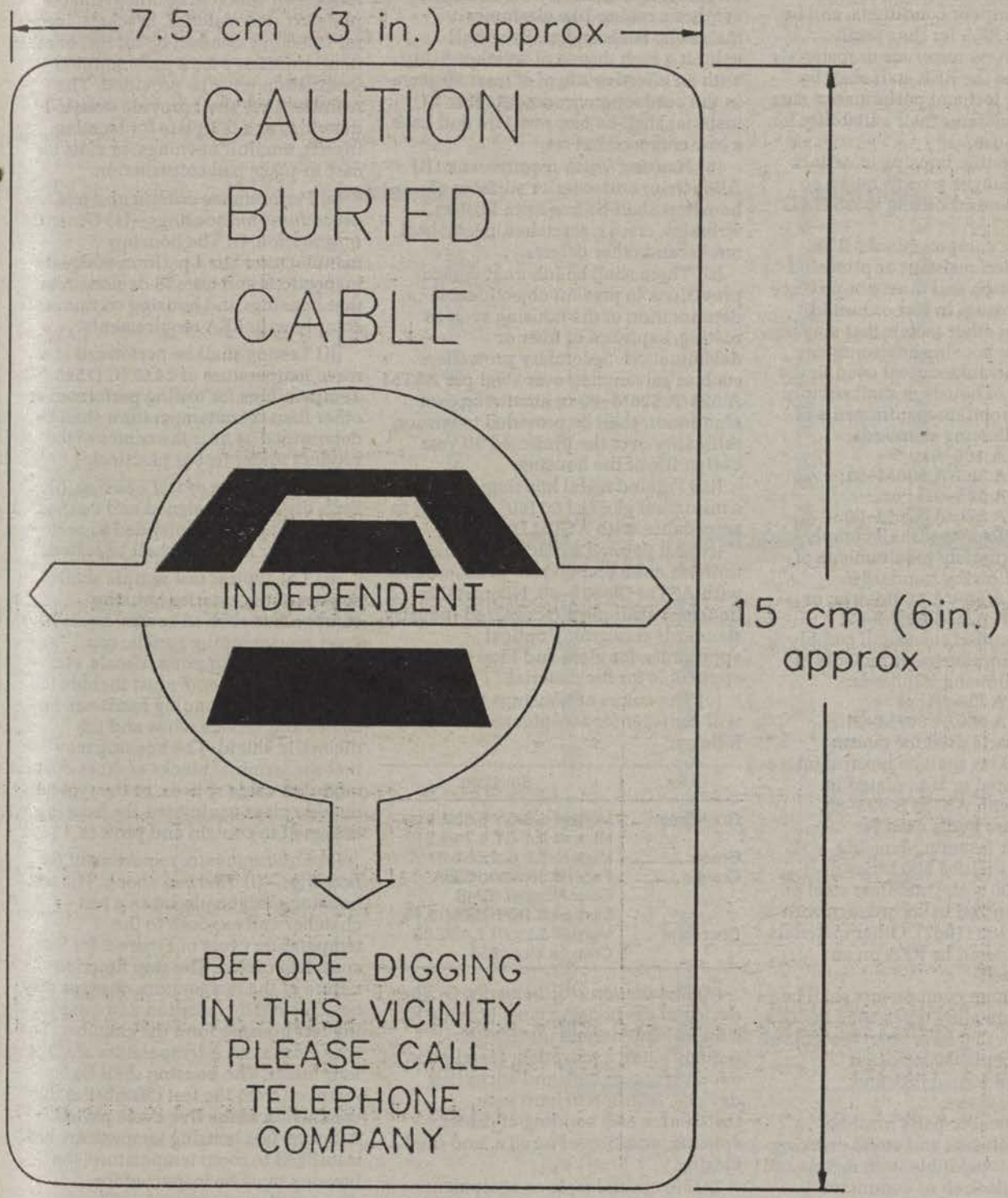

BILLING CODE 3410-15-C

(ii) All materials are required to have fire resistance ratings consistent with recognized industry standards. External materials must be flame resistant.

(iii) All materials used in the manufacture of housings or component parts must achieve the required strength properties, resist deterioration when exposed to outdoor conditions, and be acceptable to REA for the specific application. New materials or materials not familiar to the REA staff shall be supported by test and performance data which demonstrates their suitability for the intended use.

(iv) Nonmetallic housing materials shall have a fungus growth rating no greater than one according to ASTM G 21–90.

(v) Metallic components shall be either corrosion resistant or protected against corrosion and must not produce galvanic corrosion in wet or humid conditions on other metals that may be present in the housing environment.

(vi) Mill galvanized steel used in the manufacture of housings shall comply with the appropriate requirements of one of the following standards:

(A) ASTM A 109–91;

(B) ASTM A 366/A 366M–91;

(C) ASTM A 525–91b; or

(D) ASTM A 526/A 526M–90.

(vii) Hot rolled steel shall comply with the appropriate requirements of one of the following standards:

(A) ASTM A 569/A 569M–91a; or

(B) ASTM A 621/A 621M–92.

(viii) Cold rolled steel shall comply with the appropriate requirements of one of the following standards:

(A) ASTM A 109–91; or

(B) ASTM A 366/A 366M–91.

(ix) Steel parts used for internal housing brackets shall be hexavalent chromate coated or zinc plated in accordance with ASTM B 633–85.

(x) Hardware items used for assembling or fastening housing components shall be 300 series or passivated 400 series stainless steel or hot dip galvanized in accordance with ASTM A 153–82 (1987). Other materials will be considered by REA on an individual basis.

(xi) Aluminum components shall be fabricated from alloy types 5052 or 6061 or other types that have been recognized as having acceptable corrosion resistance and formability and weldability features.

(xii) Nonmetallic parts must be resistant to solvents and stress cracking and shall be compatible with metals and other materials such as conductor insulations and filling compounds used in the manufacture of cable. Plastic materials must be noncorrosive to metals and resist deterioration when exposed to industrial chemical pollutants, ultra-violet rays, road salts, cleaning agents, insecticides, fertilizers, or other detrimental elements normally encountered in the outdoor environment.

(xiii) Housing door seals and gaskets may be manufactured from rubber or synthetic rubber-like elastomer materials. Seals and gaskets shall exhibit a high degree of weatherability with an effective life of at least 30 years in the outdoor environment. The material shall be tear resistant and have a low compression set.

(6) *Housing finish requirements.* (i) All interior and exterior surfaces of housings shall be free from blisters, wrinkles, cracks, scratches, dents, heat marks, and other defects.

(ii) There shall be inherent design provisions to prevent objectionable deterioration of the housing such as rusting, exposure of fiber or delamination. Secondary protection, such as galvanizing over steel per ASTM A 526/A 526M–90 or anodizing over aluminum, shall be provided to ensure reliability over the projected 30 year design life of the housing.

(iii) Painted metal housings shall have a minimum gloss of 60 (60° specular) in accordance with ASTM D 523–89.

(iv) All painted surfaces shall have a uniform color and texture in accordance with ASTM D 3928–89. Nonmetallic housings shall meet recognized industry standards concerning optical appearance for gloss and haze as applicable for the material.

(v) The colors of housings that REA will consider for acceptance shall be as follows:

Color	Standard
Gray-Green ..	Munsell 6.5 GY 6.03/1.6 Munsell 4.4 GY 6.74/1.5
Green	Munsell 8.8 G 2.65/5.3
Orange	Federal Standard 595A Color Number 12246 Munsell 0.15YR 5.26/13.15
Chocolate	Munsell 5.27YR 2.40/2.60 Color Number 835

(7) *Installation requirements.* (i) The design of the housing must provide for a logical and normal installation sequence, i.e., excavation, installation of a foundation or base and anchoring devices, addition of hardware, installation and bonding of cables, splicing, addition of service, and final closing.

(ii) No special tools or equipment other than that usually carried by outside plant technicians and construction crews must be required for installation of the housing. Security devices are the exception to this requirement.

(iii) Installation hardware shall maintain housings in an erect and stable position when subjected to normal storm loads. Pad-mounted designs must accommodate precast or cast-in-place reinforced concrete or other suitable prefabricated material. Brackets, inserts for fastening, conduit openings, or other items necessary for a pad-mounted installation must be provided. The manufacturer shall provide detailed drawings or a template for locating inserts, conduit openings, or slots for cast-in-place pad construction.

(e) *Performance criteria and test procedures for housings*—(1) *General information.* (i) The housing manufacturer shall perform adequate inspections and tests to demonstrate that housings and housing components comply with REA requirements.

(ii) Testing shall be performed at a room temperature of 24±3 °C (75±5 °C). Temperatures for testing performed at other than room temperature shall be determined as near the center of the product under test as practical.

(2) *Description of test housing.* (i) Each distinctly designed and configured family of housings intended to perform a particular function shall be tested.

(ii) The typical test sample shall consist of the exterior housing components such as covers, backplates, good housekeeping panels, cap assembly, anchor posts, decals, etc. Interior components must include the bonding and grounding hardware for cables and service wires and the dielectric shield. The housing may include terminal blocks or cross-connect modules, cable splices, or the typical outside plant equipment the housing is designed to contain and protect.

(3) *Environmental requirement for housings*—(i) *Thermal shock.* The test housing shall be placed in a test chamber and exposed to the temperature cycle of Figure 2 for five complete cycles. The step function nature of the temperature changes may be achieved by insertion and removal of the test housing from the chamber. The soak time at each temperature shall be four hours. The housing shall be removed from the test chamber at the conclusion of the five-cycle period. After the test housing temperature has stabilized to room temperature, the housing must be inspected for deterioration of materials and satisfactory operation of mechanical functions. Figure 2 is as follows:

BILLING CODE 3410–15–P

FIGURE 2

THERMAL SHOCK TEMPERATURE CYCLE

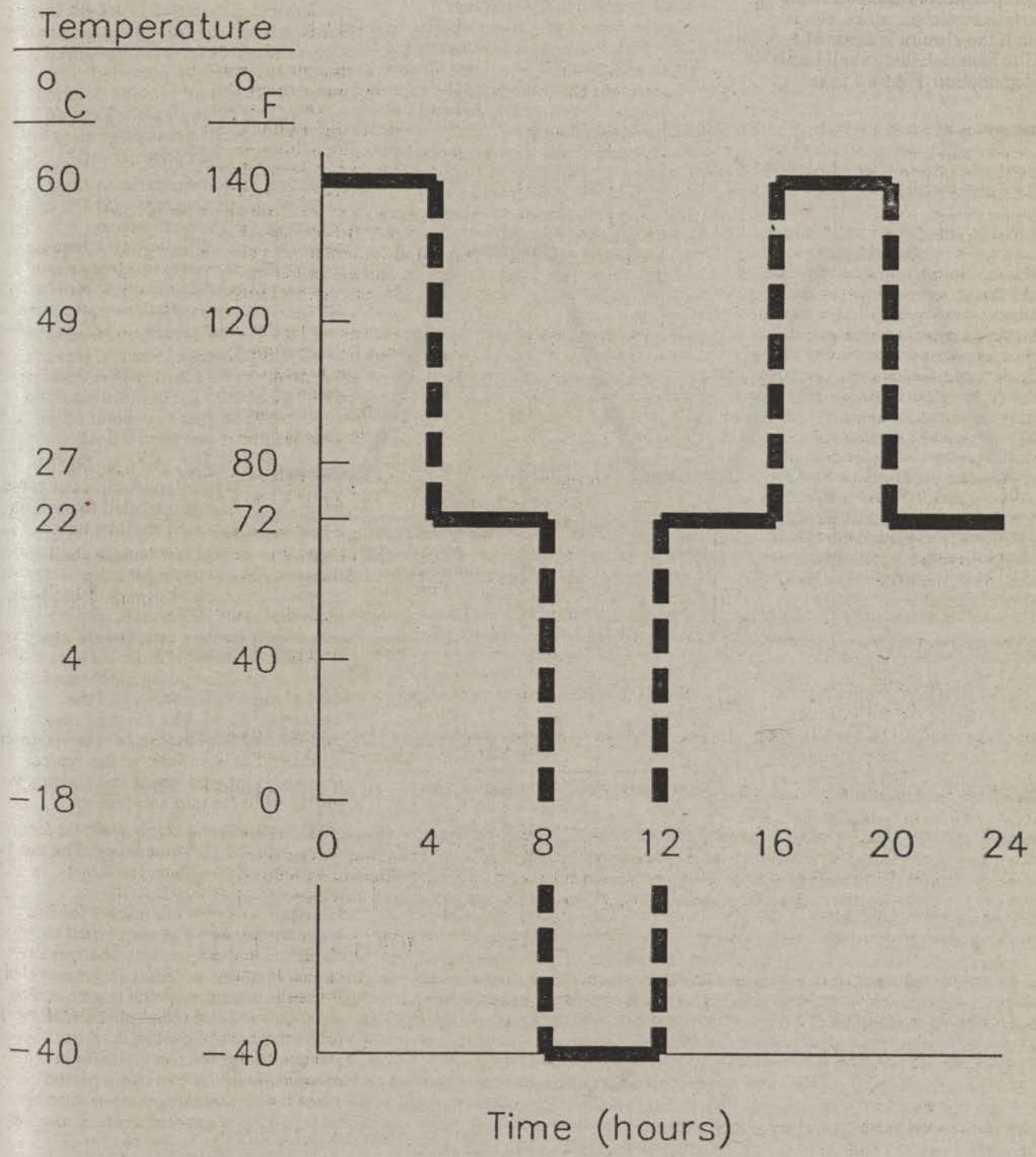

BILLING CODE 3410-15-C

(ii) *Thermal shock and humidity.* The test housing shall be placed in an environmental test chamber at 95 ± 3 percent (%) relative humidity (RH) and temperature cycled per Figure 3 for a period of 30 days. At the end of the test there shall be no rust or corrosion of any closure components. Minor corrosion due to surface scratches, nicks, etc. is permitted. If the closure is made of a nonmetallic material, there shall be no signs of degradation Figure 3 is as follows:

BILLING CODE 3410–15–P

FIGURE 3

ENVIRONMENTAL TEST CHAMBER TEMPERATURE CYCLE

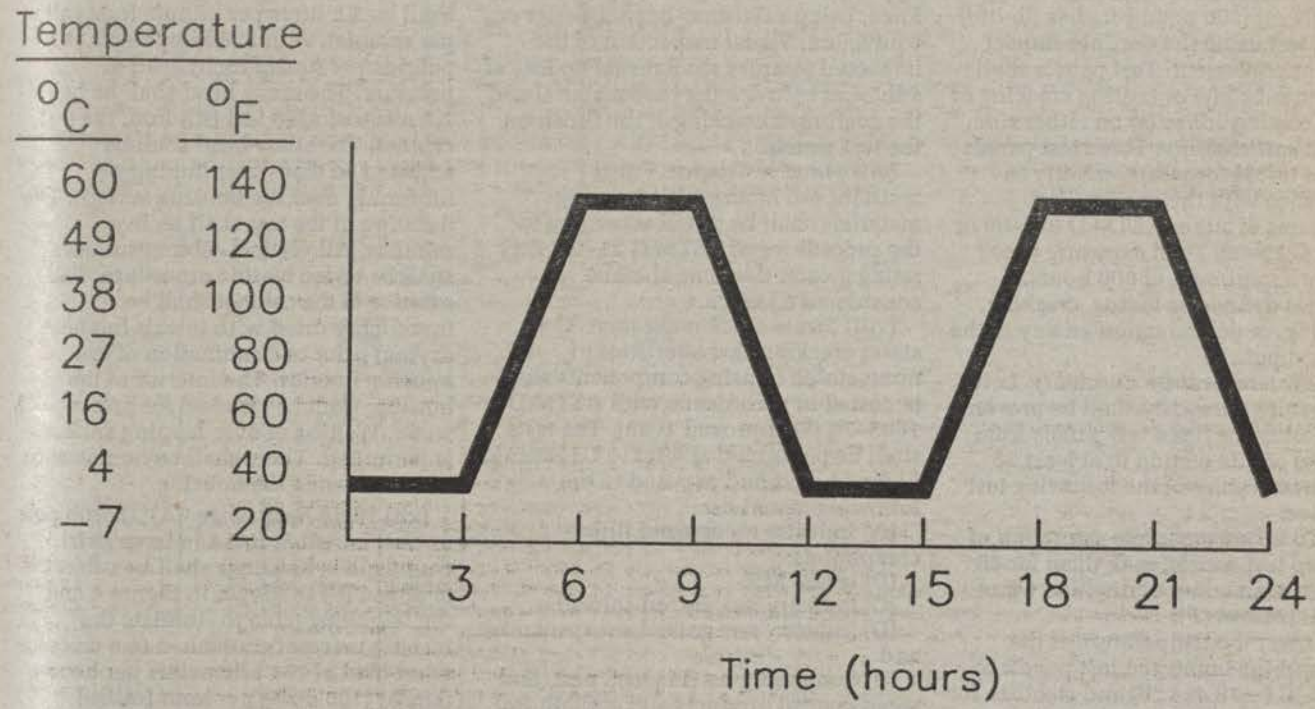

Note: Relative Humidity = 95% ± 3%

BILLING CODE 3410–15–C

(iii) *Humidity and condensation.* Test panels shall be placed in an environmental chamber and subjected to 1,008 hours (42 cycles) of exposure per ASTM D 2247–92. One cycle consists of 24 hours of 100% humidity (with condensation on the panels) at a cabinet temperature of 38±1 °C (100±2 °F) and an ambient temperature of 25±1 °C (77±2 °F) without heat input. Upon completion of cycling, the test panels shall be subjected to an 11 newton-meter (N-m) (100 pound-inches (lb-in.)) impact test using the Gardner-Impact Tester or equivalent. Test panels shall show no substrate or coating cracking or loss of coating adhesion on either side.

(iv) *Weatherability.* Three test panels shall be tested for weatherability in accordance with the appropriate procedures of either ASTM D 822–89 or ASTM G 23–90. Total exposure time shall be a minimum of 800 hours. Failure is defined as fading, cracking, blistering, or delamination on any of the three test panels.

(v) *Low temperature durability.* Low temperature durability shall be proven by exposing the three test panels from (e)(3)(iv) of this section to at least 25 continuous cycles of the following test sequence:

(A) To insure complete saturation of the three test panels, soak them for 96 hours in a container of distilled water 22±2 °C (71.6±4 °F);

(B) Lower the temperature of the water and the immersed test panels to −28±2 °C (−18.4±4 °F) and stabilize for 24 hours;

(C) Thaw the water with the samples to 22±2 °C (71.6±4 °F) and stabilize for 24 hours;

(D) Repeat the procedure 24 times. Any cracking, crazing, deforming, or delaminating on any of the three test panels shall be considered a failure; and

(E) Remove the samples from the water and impact test the three panels by delivering a force of 11.3 N-m (100 lb-in.) using a Gardner-Impact Tester to each specimen at 71, 22, and −28±2 °C (159.8, 71.6, and −18.4±4 °F), after stabilizing them at those temperatures for at least two hours. Visual inspection shall reveal no deformation or perforations on any of the test panels.

(vi) *Corrosion resistance.* Corrosivity shall be tested in accordance with the requirements of ASTM B 117–90. Both scribed and unscribed panels shall be evaluated following the procedures of ASTM D 1654–92. Scribed panels shall have a rating of at least six, following 500 hours of exposure to salt fog, and the unscribed panels shall have a rating no lower than 10, after 1,000 hours exposure. Visual rust inspection shall confirm no more than 0.03% rusting (rust grade 9) of the surface area of the test sample when evaluated in accordance with ASTM D 610–85(1989). The unscribed samples shall be impacted with an 11.3 N-m (100 lb-in.) force, using a Gardner-Impact Tester or equivalent. Visual inspection of the impacted samples shall reveal no loss of adhesion between the base material and the coating or cracking at the finish on the test panels.

(vii) *Fungi resistance.* Fungi resistance of nonmetallic housing materials shall be tested according to the procedures of ASTM G 21–90. Any rating greater than one shall be considered a failure.

(viii) *Stress crack resistance.* The stress cracking characteristics of nonmetallic housing components shall be tested in accordance with ASTM D 1693–70 (Reapproved 1988). The tests shall be performed at 49±2½ C (120±4½ F) for 14 days and exposed to the following materials:

(A) Industry recognized filling compounds;

(B) Isopar M;

(C) Industry recognized solvents;

(D) Industry recognized encapsulants; and

(E) Commonly used insect, pest, and weed control products and agricultural fertilizers.

(ix) *Chemical resistance.* (A) Chemical resistance shall be determined by immersing representative nonmetallic material samples in each of the following solutions for 72 hours at 22±2 °C (71.6±4 °F):

(*1*) 3% sulfuric acid;

(*2*) 100 parts per million (ppm) trichloroethane in water;

(*3*) 0.2 N sodium hydroxide; and

(*4*) Unleaded high octane gasoline.

(B) There shall be no swelling, deformation, or softening of the material samples or any discoloration of the solution.

(x) *Ultraviolet resistance.* Test panels of metallic and nonmetallic outer housing materials shall be subjected to 700 hours exposure per ASTM D 2565–92 using the type BH apparatus. The panels shall not exhibit fading, blistering, checking, or delamination.

(xi) *Weathertightness.* The housing shall be mounted in its typical field installation position and sprayed with water. The temperature of the water shall be adjusted to be equal to or warmer than the temperature of the cabinet interior to avoid the possibility of condensation. A water spray head shall be used to direct water at the housing so that the water stream will strike the assembly at a downward angle of 45 degrees. The flow of the water shall be 3.8 liters per minute (one gallon per minute), with 276 kilopascals (40 pounds per square inch) head of pressure. The spray head shall be held 1.8 meters (m) (6 feet (ft)) from the test cabinet. The spray head shall be adjusted so that water impinges uniformly over the housing surface. The duration of the test shall be five minutes. All vertical cabinet surfaces shall be tested by this procedure. The exterior of the cabinet shall be thoroughly dried with towels (no heat drying) prior to examination of the housing interior. The interior of the housing shall be checked for presence of water. Wetting of over-lapping surfaces is permitted. There shall be no presence of water inside the housing.

(xii) *Wind Resistance.* (A)(*1*) Stub pole or wall mounted SAI and large pair count splice housings shall be subjected to a load (F) as shown in Figure 4 and the following table to simulate the turning moment equivalent to a uniform wind load of 161 kilometers per hour (km/h) (100 miles per hour (mi/h)) perpendicular to the largest surface area.

Maximum area of largest surface square centimeters cm² (Square inches) (in.²)	Load	
	kg	(lb)
5,200 (800) or less	18	(40)
5,201 to 9,100 (801 to 1,400)	32	(70)
9,101 to 13,000 (1,401 to 2,000)	45	(100)
13,001 to 16,200 (2,001 to 2,500)	57	(125)

Note: The procedures for housings with larger surface area will be evaluated by REA on a case-by-case basis.

(*2*) The housing shall remain in its original mounting position throughout the test and exhibit no mechanical deformation.

(*3*) Figure 4 is as follows:

BILLING CODE 3410–15–P

FIGURE 4

TURNING MOMENT – POLE MOUNTED HOUSINGS

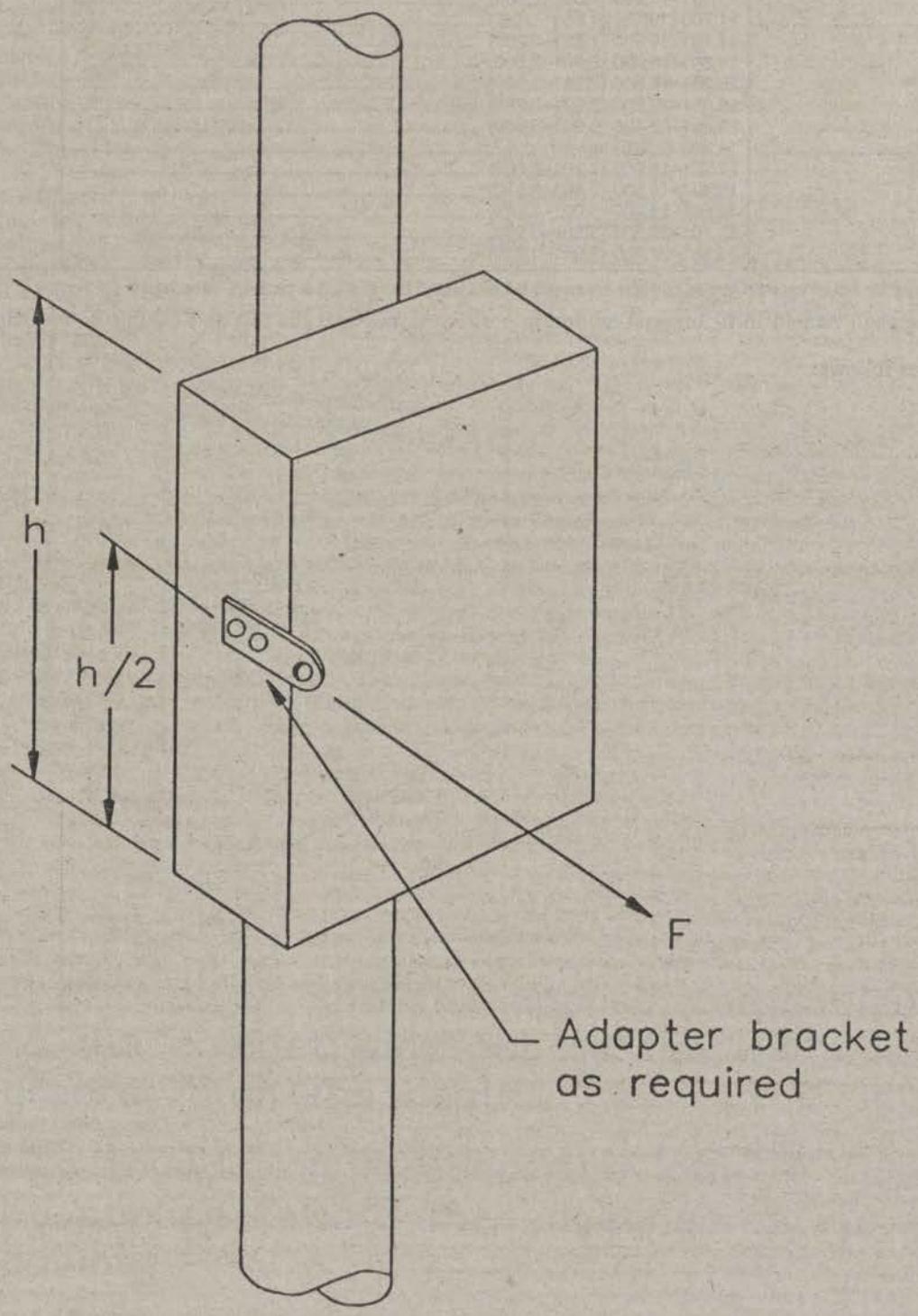

BILLING CODE 3410–15–C

(B)(*1*) Pad or ground mounted SAI or splice housings shall be subjected to a load (F) as shown in Figure 5 and the following table to simulate the overturning moment equivalent to a uniform wind load of 161 km/h (100 mi/h) perpendicular to the largest surface area.

Height cm (in.)	Maximum area of largest surface cm² (in.²)	Load	
		kg	(lb)
122 (48) or less	11,000 (1,700) or less	91	(200)
	11,001–13,000 (1,701–2,000)	104	(230)
	13,001–14,900 (2,001–2,300)	118	(260)
123–152 (49–60)	11,700 (1,800) or less	91	(200)
	11,701–14,300 (1,801–2,200)	109	(240)
	14,301–16,200 (2,201–2,500)	127	(280)
	16,201–18,800 (2,501–2,900)	145	(320)
	18,801–20,800 (2,901–3,200)	163	(360)
	20,801–23,400 (3,201–3,600)	181	(400)
153–183 (61–72)	14,300 (2,200) or less	109	(240)
	14,301–16,900 (2,201–2,600)	127	(280)
	16,901–19,500 (2,601–3,000)	150	(330)
	19,501–22,700 (3,001–3,500)	172	(380)
	22,701–25,300 (3,501–3,900)	190	(420)
	25,301–27,900 (3,901–4,300)	213	(470)

Note: The procedures for housings with larger surface areas will be evaluated by REA on a case-by-case basis

(*2*) The housing shall remain in its original mounting position throughout the test and exhibit no mechanical deformation.

(*3*) Figure 5 is as follows:

BILLING CODE 3410–15–P

FIGURE 5

OVERTURNING MOMENT, PAD MOUNTED HOUSINGS

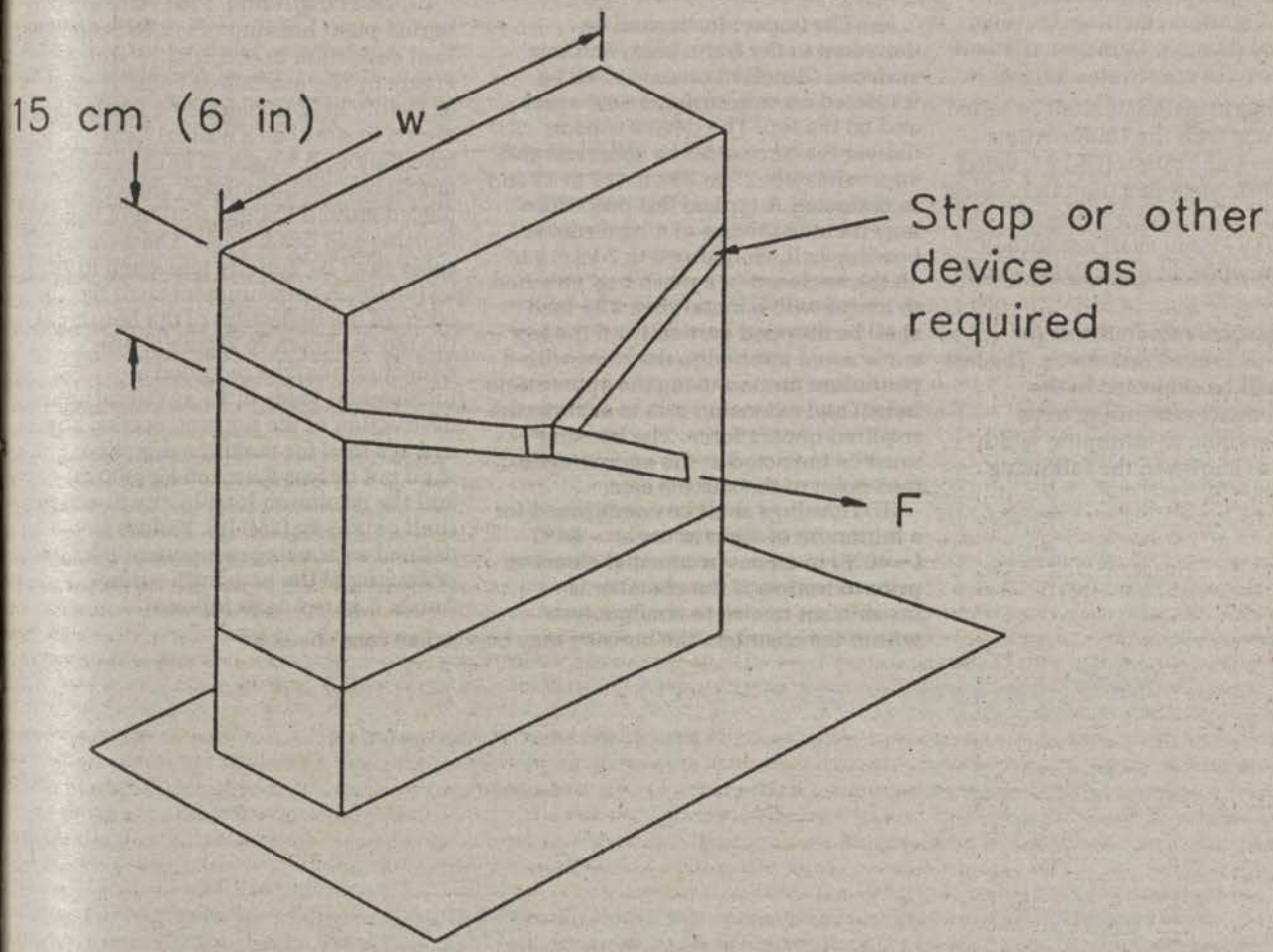

Notes:

1. The load "F" shall be applied perpendicular to the cabinet width where the width is greater than the depth.

2. If a foundation is used, the load "F" shall be applied toward the edge nearest to the cabinet.

BILLING CODE 3410-15-C

(xiii) *Fire resistance.* (A) The test housing shall be installed in a manner typical of field installation. U.S. No. 1 wheat straw shall be placed on the ground around the housing base in an one meter (3 ft) radius at an approximate depth of 10 cm (4 in.). The straw shall be ignited and permitted to burn fully. After the housing has cooled, its contents shall be inspected for evidence of ignition, melting, burning, or structural damage. Damage sufficient to impair service constitutes failure.

(B) Polymeric materials shall be tested in accordance with the Underwriters Laboratories Publication (UL) 94, dated June 18, 1991. Materials used in housing components shall have a rating of 94V–0 or 94V–1 and shall not sustain combustion when an open flame source is removed.

(4) *Mechanical requirements for housings*—(i) *Impact resistance.* The test housing shall be subjected to the following impacts according to its minimum volume or minimum width and depth as shown in the following table:

Minimum volume cm³ (in.³)	Minimum width or depth cm (in.)	Impact force	
		N-m	(lb-ft)
Less than 35,000 (2,100).	Less than 13 (5).	68	(50)
35,000 (2,100) or greater.	13 (5) or greater.	136	(100)

(A) The impact force shall be delivered to the front, back, and top surfaces. Circular housings shall be impacted on side surfaces 180° apart and on the top. The device used to deliver the force shall be spherical and approximately 25 to 31 cm (10 to 12 in.) in diameter. A typical test procedure may include the use of a hard rubber bowling ball, weighing 6 to 7 kg (13 to 16 lb), enclosed in a mesh bag, attached to a rope with a metal ring. The load shall be dropped vertically on the top surface and applied to the sides with a pendulum motion using the appropriate height and extension arm to achieve the required impact force. The housing must be impacted at the approximate mid-point of the surface area.

(B) Housings shall be conditioned for a minimum of eight hours at −40°C (−40°F) in an environmental chamber prior to testing. If the chamber is insufficient in size to conduct tests within the chamber, the housing may be removed and shall be tested within 10 minutes after removal.

(C) After impact testing, the housing shall not exhibit fractured or ruptured surfaces sufficient to allow the ingress of moisture or dust. The housing shall not exhibit mechanical damage that would impair the functioning of hinges, latches, locks, etc.

(ii) *Load deflection.* Free standing buried plant housings shall be tested for load deflection in accordance with Figure 6. The assembled housing shall be rigidly held in place by a mechanical means to simulate a normal field installation. A length of wire or cable, or other suitable material, shall be placed around the top section of the housing and deadended. The wire or cable shall be initially tensioned to 23 kg (50 lb). A measurement shall then be taken of the deflection of the housing at the top as shown in Figure 6. The deflection shall be recorded at incremental loads of 23 kg (50 lb) until destruction of the housing occurs. The average load for the three directions shall not be less than 136 kg (300 lb) and the minimum load in any direction shall be 113 kg (250 lb). Failure is defined as housing component fracture or crazing of the housing's surface finish. Figure 6 is as follows:

BILLING CODE 3410–15–P

FIGURE 6

MEASURING LOAD DEFLECTION

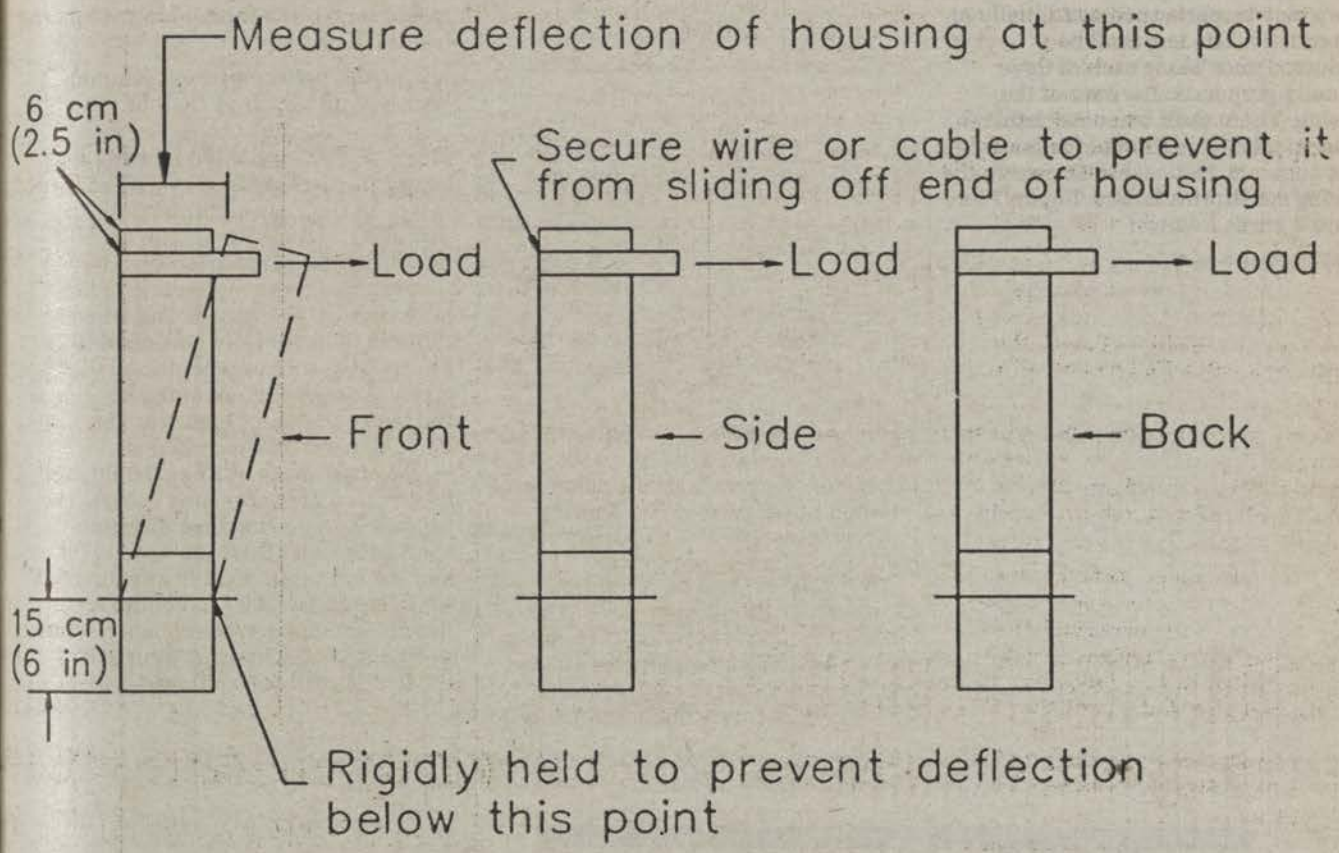

Notes:

1. One pedestal-mounted housing of each BD classification shall be tested to failure in each of the directions shown above.
2. A total of three pedestal-mounted housings of each BD classification shall be subjected to the required loads in each direction.
3. The average load for the three directions shall not be less than 136 kilograms (300 pounds). The minimum load shall be 113 kilograms (250 pounds).
4. Pole mounted housings shall be subjected to the same loading criteria.

BILLING CODE 3410-15-C

(iii) *Vibration requirements.* The test housing and its contents shall be subjected to acceleration at a sine wave frequency sweep rate as shown in Figure 7 for a housing packaged for shipment and Figure 8 for an unpackaged housing. The frequency sweep may be performed continually or sequentially. The test shall be conducted once along each of three mutually perpendicular axes of the housing. There shall be no mechanical or electrical degradation of the housing or its contents. Noticeable damage to the housing constitutes failure. Figure 7 and Figure 8 are as follows:

BILLING CODE 3410–15–P

FIGURE 7

VIBRATION TEST FOR PACKAGED HOUSINGS

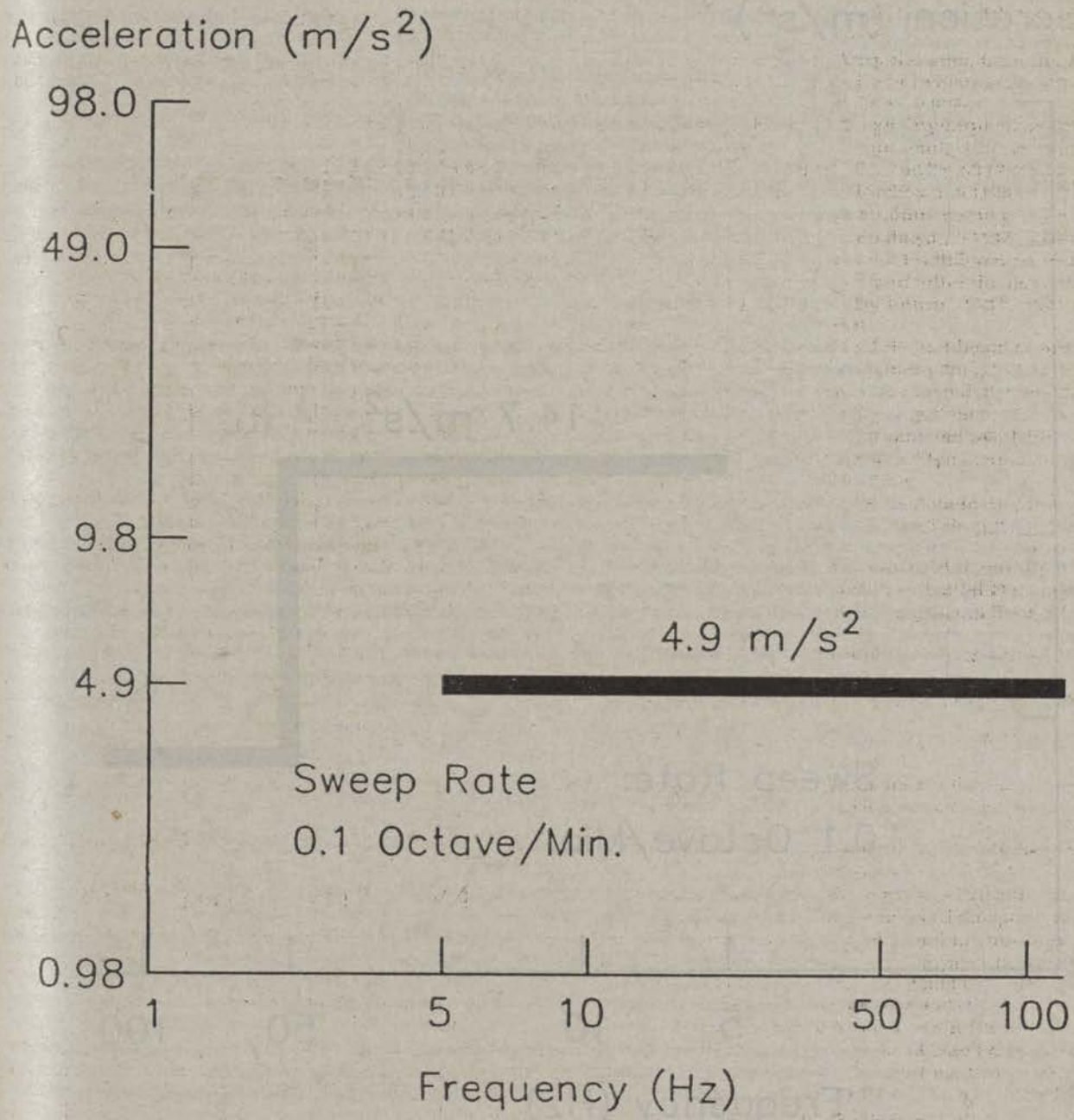

FIGURE 8

VIBRATION TEST FOR UNPACKAGED HOUSINGS

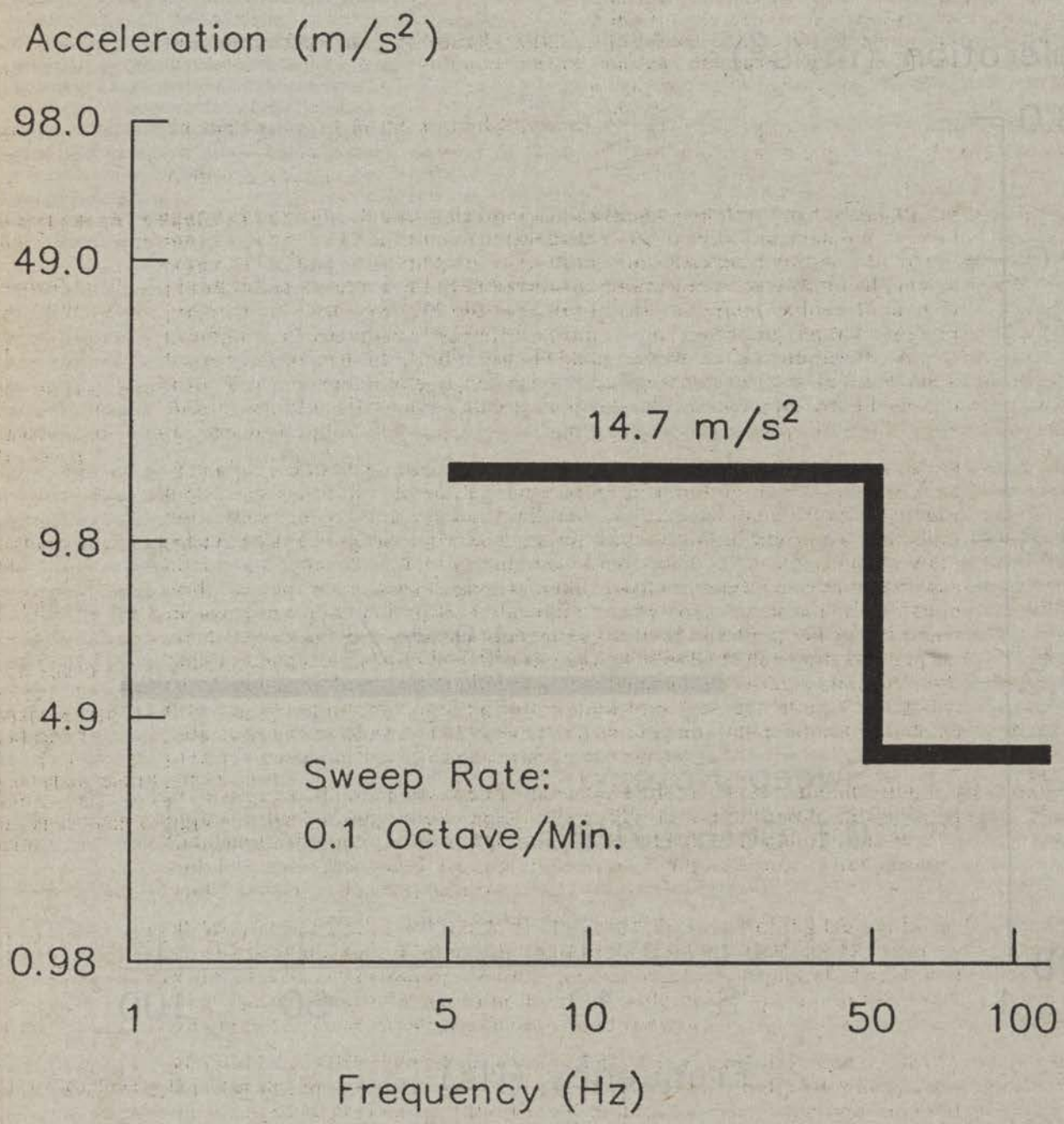

BILLING CODE 3410–15–C

(iv) *Drop test requirements.* Housings shall be subjected to appropriate drop tests according to their weight. The drop tests shall be performed on housings and their contents as normally packaged as well as on unpackaged housings. The tests shall be conducted on a smooth level concrete floor or similar unyielding surface. For corner drops, the packaged housing and its contents shall be oriented at impact such that a straight line drawn through the struck corner and package geometric center is approximately perpendicular to the impact surface.

(A) Packaged housings and their contents weighing 91 kg (200 lb) or less shall be capable of enduring a single drop on each face or corner without damage from a height specified as follows:

Packaged housing including contents weight kg (lb)	Drop height cm (in.)
0 to 9 (0 to 20)	76 (30)
10 to 23 (21 to 50)	61 (24)
24 to 45 (51 to 100)	53 (21)
46 to 91 (101 to 200)	46 (18)

(B) Packaged housings and their contents weighing more than 91 kg (200 lb) shall be capable of enduring a single drop on each of two diagonally opposite corners of the package without significant damage from a height specified as follows:

Packaged housing including contents weight kg (lb)	Drop height cm (in.)
92 to 453 (201 to 1000)	30 (12)
Over to 453 (1000)	15 (6)

(*1*) The packaged housing and contents shall be placed on its normal shipping base with one corner supported 15 cm (6 in.) above the floor and the other corner of the same end supported 30 cm (12 in.) above the floor as shown in Figure 9. The unsupported end of the package shall be raised so that the lowest corner reaches the height listed above and then allowed to fall freely. Figure 9 is as follows:

BILLING CODE 3410–15–P

FIGURE 9

CORNER DROP TESTS FOR PACKAGED HOUSINGS WEIGHING MORE THAN 91 KILOGRAMS (200 POUNDS)

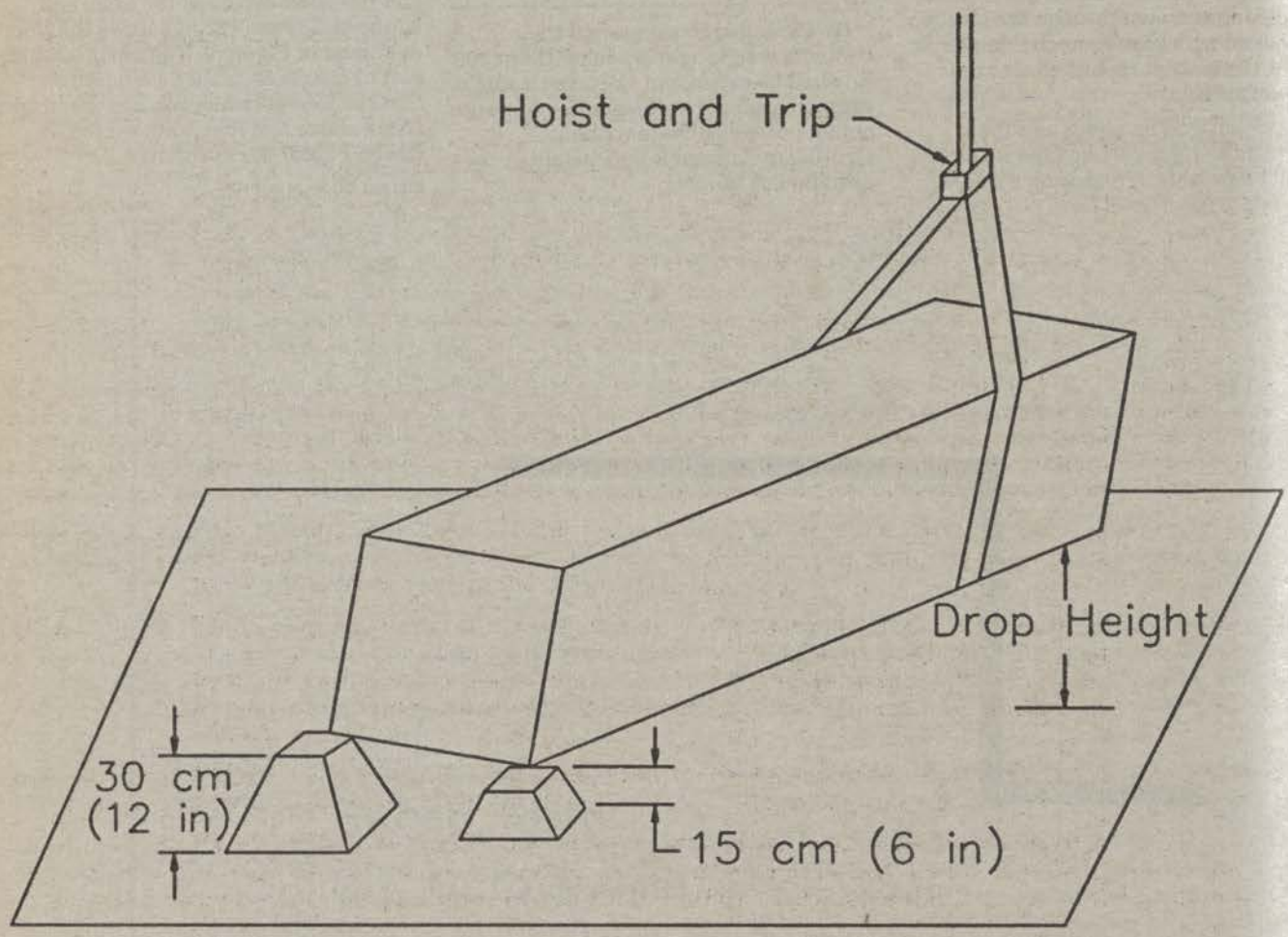

BILLING CODE 3410–15–C

(*2*) The procedure of paragraph (e)(4)(iv)(B)(*1*) of this section shall be repeated for the diagonally opposite corner.

(*3*) The packaged housing and contents shall be capable of enduring a single drop on each edge of the base of its normal shipping position from the required height without damage and shall remain operational without function impairment. The packaged housing and contents shall be placed on its base with one edge supported on a sill 15 cm (6 in.) high and the unsupported edge raised to the required height as shown in Figure 10 and allowed to fall freely. Figure 10 is as follows:

BILLING CODE 3410–15–P

FIGURE 10

EDGE DROP TEST FOR PACKAGED HOUSINIGS WEIGHING MORE THAN 91 KILOGRAMS (200 POUNDS)

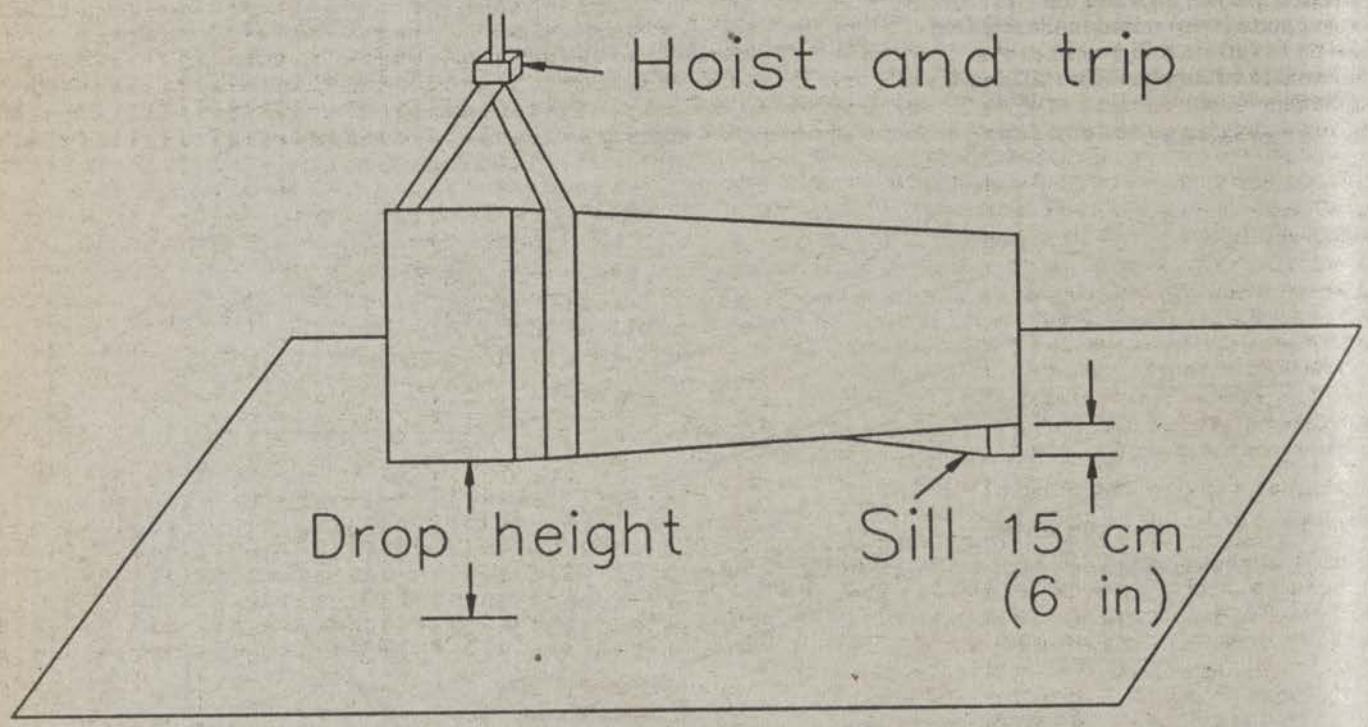

BILLING CODE 3410-15-C

(*4*) The procedure of (e)(4)(iv)(B)(*3*) of this section shall be repeated for all edges of the base.

(C) Unpackaged housings and their contents weighing 23 kg (50 lb) or less shall be capable of enduring a single drop on each face and adjacent corners without significant damage from a height specified as follows:

Packaged housing including contents weight kg (lb)	Drop height cm (in.)
0 to 9 (0 to 20)	10 (4)
10 to 23 (21 to 50)	8 (3)

(D) (*1*) Unpackaged housings and their contents weighing more than 23 kg (50 lb) shall be capable of enduring a single drop without significant damage when lifted by its normal hoisting supports as shown in Figure 11 and with its lowest point at a height specified as follows:

Packaged housing including contents weight kg (lb)	Drop height cm (in.)
23 to 45 (51 to 100)	5 (2)

(*2*) Figure 11 is as follows:

BILLING CODE 3410–15–P

FIGURE 11

DROP TEST FOR UNPACKAGED HOUSINGS WEIGHING MORE THAN 23 KILOGRAMS (50 POUNDS)

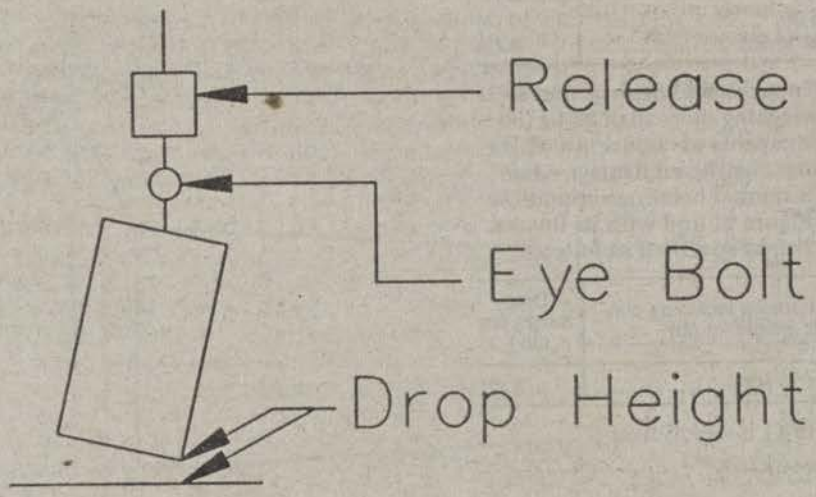

Hoisting Drop Test

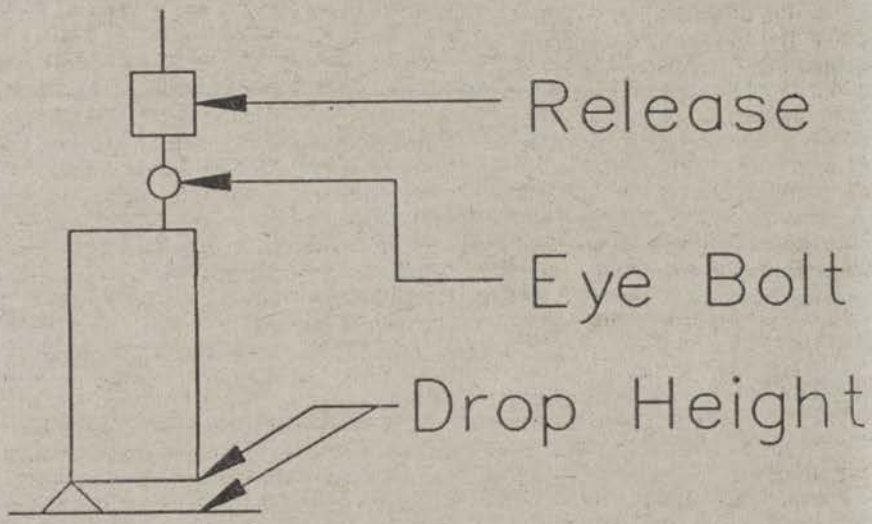

Edge and Corner Drop Test

BILLING CODE 3410-15-C

(v) *Firearms resistance.* All housings shall be tested for resistance to penetration by direct impact from a 12 gauge shotgun equipped with a modified choke and the use of a 3¾ dram equivalent powder charge and 35 grams #6 lead shot fired from a distance of 15 m (50 ft). The 12 gauge shotgun shall be fired from a normal standing position at the front side of the housing. Penetration through the housing wall by the lead shot shall constitute failure.

(vi) *Lifting hardware requirements.* The lifting hardware on housings and their contents that weigh more than 91 kg (200 lb) shall be tested. The housing shall be fastened to a restraining device such as a concrete slab and subjected to loading through the lifting attachments to simulate the lifting load. For the first test a lifting line equipped with a dynamometer shall be attached to the housing lifting hardware and a load applied equal to three times the weight of a fully equipped housing. Deformation or damage to the housing or lifting hardware constitutes failure. A second test shall be conducted with the same arrangements as for the first except that a load shall be applied equal to six times the weight of a fully equipped housing. There shall be no catastrophic failure of the lifting hardware or housing.

(vii) *Stub cable strain relief tests.* Housings equipped with cable stubs and cable shipping retainer shall be tested by lifting a test housing, with the maximum length and weight of cable orderable, in a manner causing the full weight of the cable to be supported by the cabinet. Examination of the cable sheath after lifting shall reveal no tearing, rupturing, or other damage. The cable conductors and shield shall be tested for shorts and opens. Electrical defects to the stub cable or damage to the housing constitutes failure.

(viii) *Door restrainer evaluation.* (A) The housing shall be positioned with the door held in the open position by the door restraining device. A load, determined in accordance with the following table, shall be applied to the center of the door, perpendicular to the door and in each of the opening and closing directions.

Maximum area of door surface cm² (in.²)	Load kg (lb)
5,200 (800) or less	72 (160)
5,201 to 9,100 (801 to 1,400)	127 (280)
9,101 to 13,000 (1,401 to 2,000)	181 (400)

Note: Test procedures for housings with larger doors will be evaluated by REA on a case-by-case basis.

(B) There shall be no functional failure of the restraining device nor mechanical damage to the housing.

(ix) *Security evaluation.* The security locking device shall be capable of withstanding a maximum torque of 2.8 N-m (25 lb-in.) without incurring physical damage to the closure, thereby resulting in a condition where the closure cannot be either accessed or locked.

(5) *Electrical requirements for housings.* Each bonding stud and nut location shall be evaluated by attaching one lead from a dc or alternating current (ac) power source to a bonding stud with the nut torqued as specified by its manufacturer and the other power source lead connected to the closure grounding conductor connector. The current path thus established must be capable of sustaining a current of 1,000 amperes root-mean-square for at least 20 seconds without fusing or causing any damage to the closure or its contents.

(6) *Finish requirements*—(i) *Impact resistance.* The finish on painted metal surfaces shall not exhibit radial cracking on the impact surface (intrusion) when indented at 18 N-m (160 lb-in.) with a 1.6 cm (0.6 in.) diameter spherical indentor. This test shall be performed in accordance with ASTM D 2794–92 with the exception that the test panel shall be of the same material, thickness, and finish as the pedestal housing being evaluated.

(ii) *Finish adhesion.* Painted finishes shall be tested for adhesion of finish in accordance with ASTM D 2197–86 (Reapproved 1991), Method A. There shall be no gouging in the top coat when tested with an 8 kg (17.7 lb) load. Gouging is defined as removal or separation of paint particles or breaking of the finish by the scraping loop to the extent of exposing base metal.

(iii) *Color evaluation.* The color of the housing finish should be compared against the Munsell system of color notation, as described in ASTM D 1535–89 to determine color consistency with that desired.

(iv) *Gloss evaluation.* The finish on painted housings shall be tested on two approximately 20 cm × 20 cm (8 in. × 8 in.) samples for each color used in accordance with the procedures of ASTM D 523–89. The finish shall have a minimum gloss of 60 (60° Specular).

(v) *Secondary finish evaluation.* Evidence of secondary protection shall be required for REA acceptance. Typical secondary protection is galvanizing per ASTM A 526/A 526M–90 for steel surfaces.

(f) *Functional design criteria for binding post terminal blocks used in SAI cabinets*—(1) *General description.* A conventional binding post terminal consists of a metallic element or post, one end of which is configured for the permanent connection of 22, 24, or 26 AWG solid copper conductors and the opposite end is configured for recurring connections and disconnections of solid copper cross-connect wire using a threaded screw or stud and nut combination for gripping the wire. The terminal is usually housed in a SAI cabinet. However, the terminal may receive limited use in smaller pedestal-type housings and pole mounted cabinets in the outside plant environment.

(2) *Design and fabrication requirements.* (i) Terminal blocks used in outside plant housings are expected to perform satisfactorily for a nominal design life of 30 years.

(ii) All individual terminals or terminal fields must be enclosed and the terminal enclosure must be totally filled with an encapsulating grease or gel which prevents connection degradation caused by moisture and corrosion. The encapsulant must provide complete encapsulation of terminal metallic connections and surfaces and totally fill all voids and cavities within individual terminal enclosures or terminal field enclosures to prevent ingress of moisture. The encapsulant must not restrict access to the terminal or restrict craft personnel from making connections. The encapsulant must be compatible with the standard materials used in cross-connect hardware and wiring.

(iii) Binding post terminals shall not be susceptible to damage under normal use of standard tools used by outside plant technicians such as screwdrivers and test set clips. In addition, use of other tools such as scissors, diagonal cutters and long nose pliers for tightening and loosening screws shall not result in damage to the terminal.

(iv) Terminals shall be designed so that a typical technician using customary tools shall be able to terminate cross-connect wire on a pair of terminals, or to remove it, without causing an electrical short between any two terminals or any other adjacent terminals.

(v) The terminal count sequence shall be indicated using numerals of at least 0.25 cm (0.10 in.) in height.

(vi) A means shall be provided to distinguish feeder terminals from distribution terminals.

(vii) A means shall be provided to identify tip terminals and ring terminals in a terminal field. The identification convention shall indicate tip on the left with ring on the right for horizontal

spacing and tip on the top with ring on the bottom for vertical spacing.

(viii) The preferred height of the highest terminal in the connector field in a ground mounted SAI unit shall be 168 cm (66 in.) or less as measured from the top surface of the mounting pad. The bottom or lowest terminals in the connector field shall be at least 46 cm (18 in.) from the top surface of the pad.

(ix) Pole mounted aerial units shall be 84 cm (33 in.) or less in width. The maximum allowable height of the highest terminals in a pole mounted aerial unit is 168 cm (66 in.) as measured from the top surface of the standard balcony seat used with the interface. For computation purposes, 15 cm (6 in.) shall be allowed for the distance between the bottom of the interface and the top of the balcony seat.

(3) *Auxiliary features.* (i) SAI cabinets with terminal designs which do not permit direct attachment of common test instrument clips to terminal pairs without the occurrence of shorts shall be equipped with single pair auxiliary test contacts. The auxiliary test contacts shall attach to a terminal pair and provide a set of secondary terminals which will accept typical test instrument clips without the occurrence of shorts. Wire used to connect the auxiliary test contacts to the secondary terminals shall be 20 gauge minimum stranded conductor copper wire with a minimum dielectric strength between conductors of 15 kv. The test connector shall be functional on all terminal pairs.

(ii) A 25 or 50 pair test connector shall be available which can be used to make reliable electrical contact to terminals associated with discrete 25 pair binder groups. The multi-pair test connector shall be provided with a minimum of 1.8 m (6 ft) of suitable cabling terminated to a connector, for interfacing with test sets common to the industry. The multi-pair test connector shall be functional on all terminal groups.

(iii) A special service marker shall be available which must attach to a binding post terminal to identify special circuits and insulate exposed metal parts from accidental shorts from tools and wires. A supply of 25 special service markers shall be provided with each SAI cabinet. The color of special service markers shall be red.

(iv)(A) A supply of twisted pair cross-connect wire shall be supplied with housings that are equipped with cross-connect terminals or that have provisions for mounting cross-connect terminals. The minimum length of cross-connect wire supplied is dependent on the SAI cabinet terminal capacity as follows:

Cabinet termination capacity (pairs)	Wire length
1 to 600	60 m (200 ft)
601 to 1200	120 m (400 ft)
Over 1200	180 m (600 ft)

(B) The cabinet shall be equipped to store the length of wire in a manner designed for convenient dispensing. The cross-connect wire supply shall be easily replaceable.

(g) *Performance criteria and test procedures for binding post terminal blocks used in SAI cabinets*—(1) *General.* Many of the tests described in this section require that the terminal block be installed in an appropriate housing in its typical field configuration.

(2) *Environmental requirements*—(i) *Insulation resistance/high humidity and salt fog exposure.* A test specimen shall consist of a standard ground or pole mounted housing equipped with a full complement of binding post terminals equipped with 25 special service markers. The minimum number of terminals to be tested shall be 100 pair (100 tips and 100 associated rings). The test terminals shall be selected to form a terminal array of approximate square dimensions. A 1 cm (36 in.) length of cross-connect wire shall be installed on each test terminal. All tips shall be joined together and all rings shall be joined together with a 48 volt dc potential applied as shown in Figure 12 during the high humidity/salt fog and simulated rain exposures. The 48 volt dc may be temporarily removed from the test samples during the measurement process and the ring terminal being measured shall be isolated from the remaining ring terminals. The terminal insulation resistance shall be measured at a potential of 100 volts dc using suitable instrumentation with a minimum measurement range of 10^4 to 10^{12} ohms. Figure 12 is as follows:

BILLING CODE 3410-15-P

FIGURE 12

BINDING POST ARRANGEMENT FOR INSULATION RESISTANCE TESTING

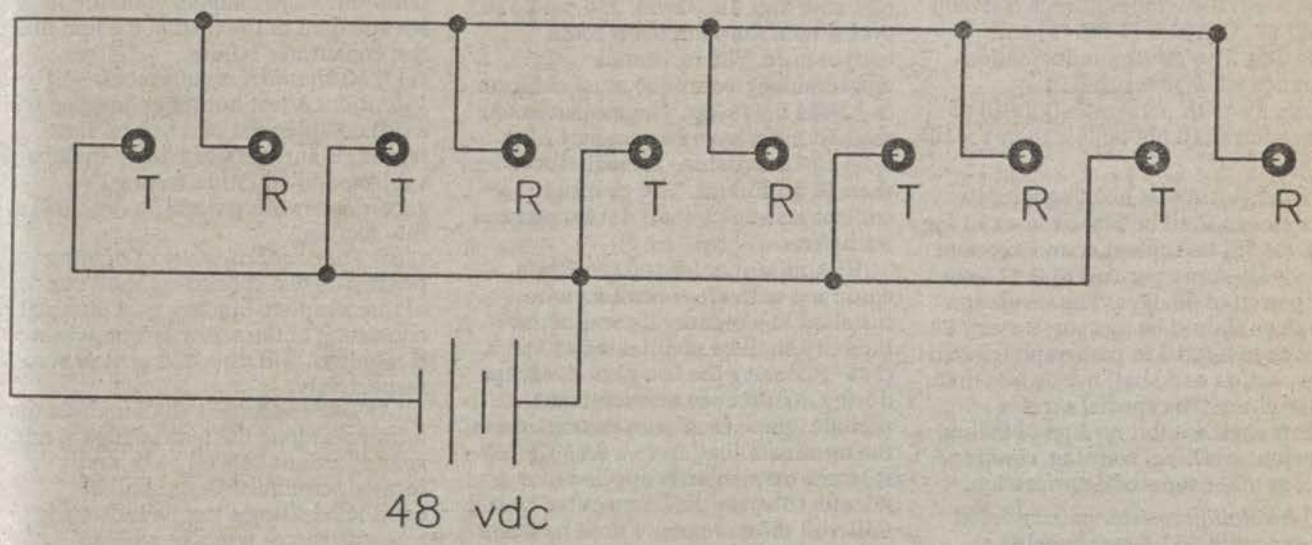

Note: 5 pair specimen arrangement shown is typical for entire (100 pair specimen minimum) test population.

BILLING CODE 3410–15–C

(A) *High humidity.* The test housing shall be placed in an environmental test chamber at 95±3% RH and the temperature cycled as shown in Figure 3 in paragraph (e)(3)(ii) of this section for a period of 30 days. The cabinet doors shall remain in the fully open position. The insulation resistance between the ring terminal of each sample and all the common tip terminals shall be measured each 24 hours when the temperature is between 38 and 57 °C (100 and 135 °F) and increasing. The minimum insulation resistance when measured in accordance with paragraph (g)(2)(i) of this section shall not be less than 1×10^6 ohms.

(B) *Salt fog.* A test housing with its doors closed shall be placed in a salt fog 35 °C (95 °F) test chamber and exposed to a salt fog spray per ASTM B 117–90 for a period of 30 days. The insulation resistance should be measured every 24 hours as indicated in paragraph (g)(2)(i) of the section and shall not be less than 1×10^6 ohms. The special service markers shall exhibit no sign of fading, corrosion, swelling, warping, running color, or other signs of deterioration.

(ii) *Insulation resistance/simulated rain exposure.* (A) A test housing as described in paragraph (g)(2)(i) of this section shall be tested for water infiltration. The test shall be conducted using the method described in paragraph (e)(3)(xi) of this section. The cabinet doors shall remain closed for the duration of the test. The insulation resistance between the ring terminals and the common tip terminals shall be measured during and immediately following the spray application as indicated in paragraph (g)(2)(i) of this section and shall not be less than 1×10^6 ohms.

(B) With the cabinet doors open, a spray of tap water at a rate of 3.8 liters per minute (1 gallon per minute) at 276 kilo-pascals (40 pounds per square inch) shall be directed on the terminal array for a period of 1 minute saturating all of the terminals. Following the spray application the doors shall be closed. The cabinet shall be maintained in a temperature environment of 26 to 28 °C (78 to 82 °F) at 95±3% RH for 6 hours. The insulation resistance shall then be measured as specified in paragraph (g)(2)(i) of this section. The minimum insulation resistance shall not be less than 1×10^6 ohms.

(iii) *Contact resistance.* A minimum of 100 terminals equipped with cross-connect wire that has been installed in a manner typical of that used in the industry shall be temperature cycled.

(A) The test shall consist of eight-hour temperature cycles with one-hour dwells at extreme temperatures of −40 °C to +60 °C (−40 °F to +140 °F), and temperature changes at an average rate of 16 °C (60 °F) per hour between the extremes. The relative humidity shall be maintained at 95±3%. The eight-hour test shall be conducted for 512 cycles. Millivolt drop measurements shall be made initially and after 2, 8, 16, 32, 64, 256, and 512 cycles with the samples at room temperature. The resistance measurement technique must conform to ASTM B 539–90. The measurement method must have an accuracy of at least ±30 microohms for resistances less than 50 milliohms. The change in contact resistance shall not exceed 2 milliohms.

(B) A minimum of 100 terminals equipped with cross-connect wire installed in a manner typical of the industry shall be maintained at 118 °C (245 °F) during the test period, except during disturbance measurement periods where each wire connection to the terminals shall have a 0.23 kg (0.5 lb) force momentarily applied in a manner to stress the connection. Initial millivolt measurements shall be made without disturbing the joints in accordance with paragraph (g)(2)(iii)(A) of this section with the samples at room temperature. After initial measurement each sample shall be disturbed followed by a millivolt drop measurement after 1, 2, 4, 8, 16, and 33 days. The change in contact resistance should be less than 2 milliohms when compared to the initial measurement.

(iv) *Fire resistance.* A fully equipped cabinet including a full complement of cross-connect jumpers shall be installed in the standard field arrangement and tested for fire resistance in accordance with paragraphs (e)(3)(xiii) introductory text through (e)(3)(xiii)(B) of this section. After cooling, the cabinet, terminals, and associated wiring shall be inspected for signs of ignition, melting, burning, or structural damage of sufficient consequences such that the results are service affecting.

(v) *Encapsulant material compatibility.* The terminal connection encapsulant compound must be compatible with the standard materials used in cross-connect hardware and wiring when aged in accordance with ASTM D 4568–86 at a temperature of 80±1 °C (176± 2 °F). The conductor insulation shall retain a minimum of 85% of its unaged tensile strength and elongation values. The cross-connect hardware shall exhibit no visible material degradation.

(vi) *Encapsulant flow test.* Terminal connection encapsulant must remain stable at 80±1 °C (176±2 °F) when tested in an environmental chamber. Test specimens shall be suspended in a preheated oven over a glass dish or other drip-catching medium for a period of 24 hours. At the end of the test period, the glass dish shall be examined for evidence of flowing or dripping of encapsulant from the cross-connect terminal. More than 0.5 gram of encapsulant in the dish at the end of the test constitutes failure.

(3) *Mechanical requirements*—(i) *Vibration.* A test housing equipped with a full complement of cross-connect terminals and jumper wiring shall be subjected to vibration testing in accordance with paragraph (e)(4)(iii) of this section.

(ii) *Torsional capacity of binding posts.* The test specimens shall consist of the complete binding post terminal consisting of the screw or nut, washers if required, and threaded post or stud respectively.

(A) Test specimens shall include the terminals along the matrix edge at mid-span locations as well as centrally located terminals. Tests shall be conducted using a torque indicating screwdriver, or wrench, with an accuracy of ±0.17 N-m (±1.5 lb-in.) or better. The torque indicating device shall be used to tighten a screw or nut until failure of the screw or nut is achieved. Tests shall be conducted while the test specimen is stabilized at temperatures of −40 °C, 20 °C, and 71 °C (−40 °F, +68 °F, and at +160 °F). Record the torques at terminal failure. At least 10 test specimens shall be tested at each temperature. The failure torque shall not be less than 2.8 N-m (25.0 lb-in.) for each temperature.

(B) The post or stud of the binding post terminal shall not fail before the screw or nut when increasing torque. The faceplate or receptacle restraining the post or stud shall not fail before the screw or nut when increasing torque.

(iii) *Lateral loading capacity of binding posts.* A minimum of three sets of 25 terminals shall be tested with the test specimens stabilized at temperatures of −40 °C, 20 °C and 71 °C (−40 °F, +68 °F, and 100 °F). The test arrangement shall include the terminals along the matrix edge at mid-span locations as well as centrally located terminals. A force measuring device, such as a dynamometer, shall be attached to the end of a binding post terminal and a 16 kg (35 lb) force applied orthogonally to the terminal axis in 4 perpendicular directions as shown in Figure 13. Permanent deformation in excess of 0.08 cm (0.03

in.) or any structural damage in either the terminal or faceplate constitutes a failure. Figure 13 is as follows:

BILLING CODE 3410–15–P

FIGURE 13

LATERAL LOADING OF BINDING POST TERMINALS

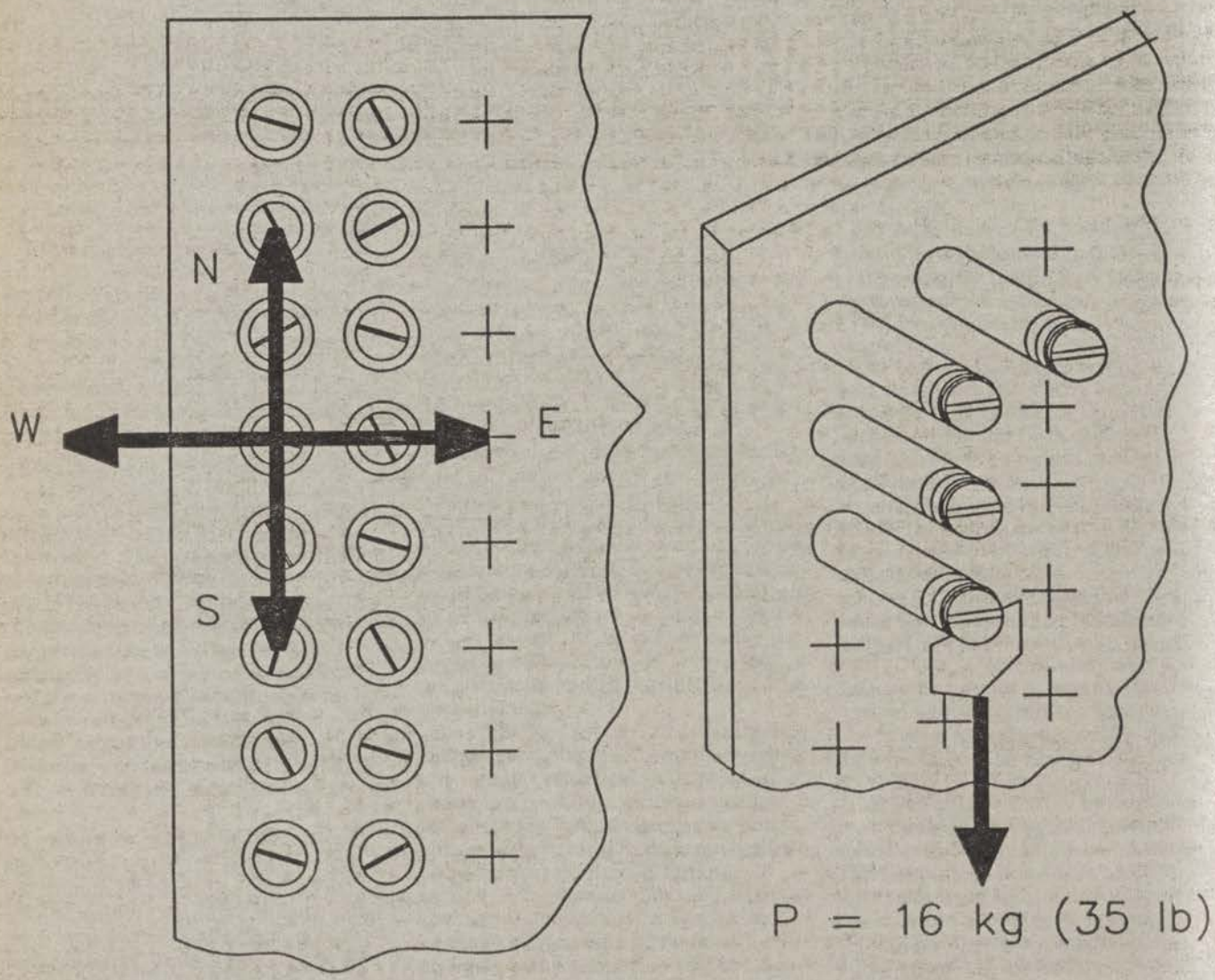

Note: Apply load P in N, E, S, and W directions

BILLING CODE 3410-15-C

(iv) *Axial pullout resistance.* A minimum of three sets of 25 terminals shall be tested with the test specimens stabilized at temperatures of −40 °C, 20 °C, and 71 °C (−40 °F, +68 °F, and 100 °
F). The test arrangement shall include the terminals along the matrix edge at mid-span locations as well as centrally located terminals. A force measuring device, such as a dynamometer, shall be attached to a terminal and a force of 16 kg (35 lb) applied on axis as shown in Figure 14. There shall be no permanent deformation in excess of 0.08 cm (0.03 in.), any structural damage, or terminal pull-out in either the terminal or the faceplate. Figure 14 is as follows:

BILLING CODE 3410–15–P

FIGURE 14

AXIAL PULLOUT OF BINDING POST TERMINALS

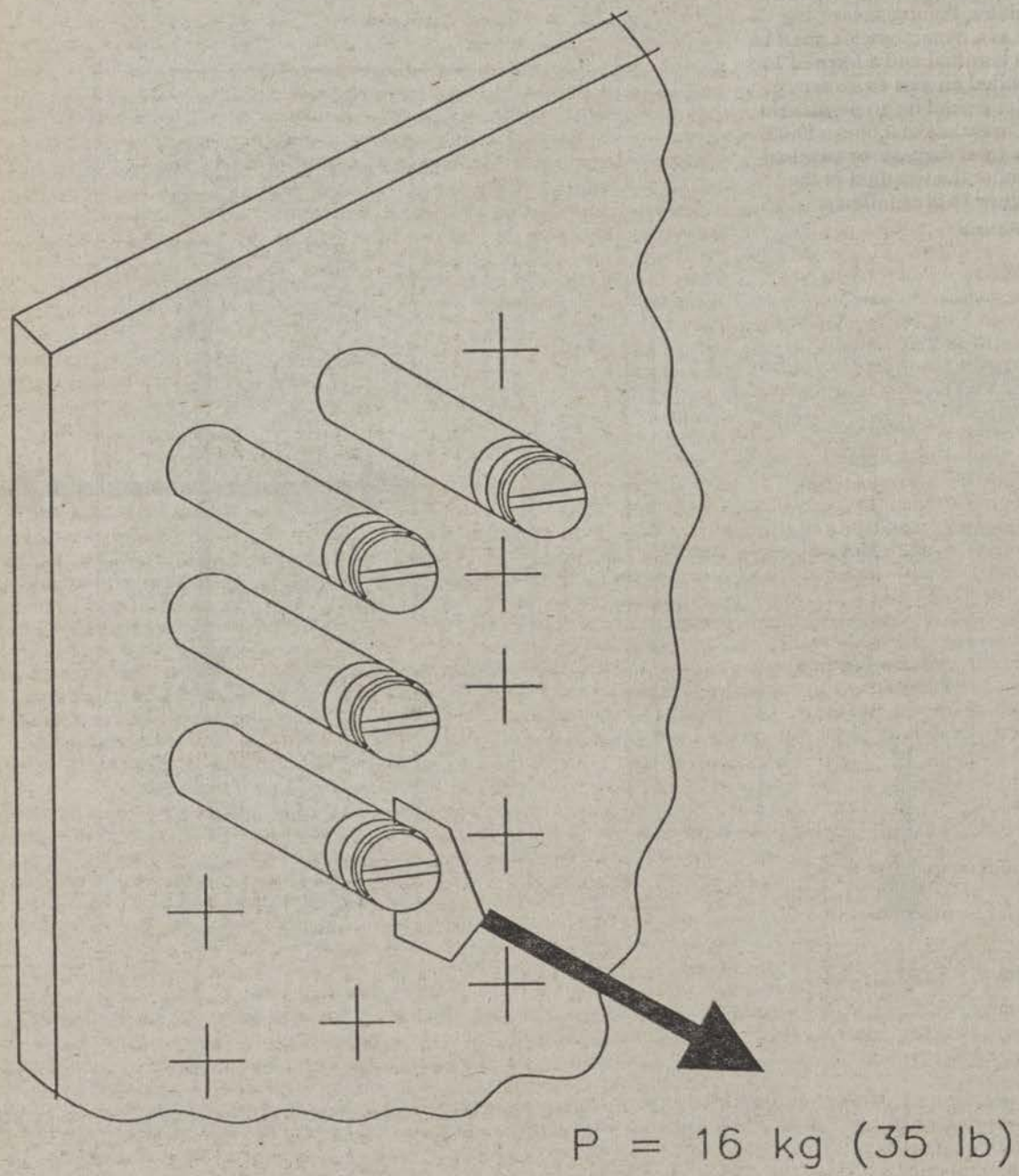

BILLING CODE 3510–15–C

(v) *Test connector reliability.* (A) A single pair connector shall be capable of making a minimum of 100 successive connections to binding post terminals without the occurrence of an open circuit. The test shall include terminals along the matrix edge, center, top, and bottom.

(B) A multi-pair test connector shall be attached to the binding post terminal field and tests for opens between the binding post terminals and the test connector shall be conducted. All circuits must prove good. The test shall be repeated along the terminal matrix edges, center, top, and bottom.

(vi) *Service cycle reliability.* A torque indicating device or wrench with an accuracy of ±0.17 N-m (±1.5 lb-in.) or better shall be used to tighten the terminal screw or nut as appropriate to 1.7 N-m (15.0 lb-in.). The terminal nut or screw is then loosened and retightened to 1.7 N-m (15 lb-in.). After 50 repeated connections and disconnections, the terminal shall be placed in an environmental chamber at 95% RH where the temperature shall be cycled as indicated in Figure 3 in paragraph (e)(3)(ii) of this section for a duration of 72 hours. The terminal shall then be momentarily removed from the chamber and the test procedure repeated. After a total of 250 loosening and retightening cycles have accumulated, the terminal must be capable of withstanding a torque of 1.7 N-m (15 lb-in.).

(4) *Dielectric strength.* All housing components in the vicinity of unsheathed field cable conductors, unsheathed housing stub cable or harness conductors, terminals, or cross-connect wire paths shall have a minimum dielectric strength of 500 volts ac to the cabinet grounding and bonding bracket. Dielectric strength is tested by connecting one lead from a 500-volt ac at 0.5 ampere source to the cabinet ground connector and the other lead is passed along the surfaces of all cabinet components in the vicinity of unsheathed cable or harness conductors, cross-connect wire paths, and in the splice area where unsheathed field cable conductors may be located. Sparkover constitutes failure.

(5) *Operational requirements*—(i) *Durability.* In order to verify the durability requirements while minimizing the number of test housings required to complete the test program, the binding posts selected for tests shall be separately identified and then checked to establish compliance after the various tests have been conducted.

(ii) Twenty-five jumper connections shall be made on each of two binding post connectors chosen at random from a representative sample in an assembled interface unit. After exposure to this test, these and adjacent connectors shall be inspected for damage such as cracks or chips in metal or plastic parts. Failure consists of structural damage, open circuits through the connector, or inability to pass the torsional, lateral loading, or axial pullout tests described in paragraphs (g)(3)(ii) through (g)(3)(iv) of this section.

(iii) Select six binding posts at random in a representative interface. On each connector, attach any test cord included with the unit and then remove the test cord as follows. On binding post sample 1, remove the cord normally ten times. On binding post sample 2, remove the cord ten times by jerking the test leads straight out. In these and the remaining tests, do this without releasing any manual attachment mechanisms. On sample 3, remove ten times by jerking downward at 45° from horizontal; sample 4, upward at 45° ten times; sample 5, left 45° ten times; sample 6, right 45° ten times. Check for opens and damage in the test cord, clips, and connectors. Failure consists of structural damage, open circuits through the connector, or inability of the terminal blocks to pass the torsional, lateral loading, axial pullout, test connector reliability, or dielectric strength tests described in paragraphs (g)(3)(ii) through (g)(3)(v)(B), and paragraph (g)(4) of this section.

(iv) Use craft tools such as scissors, diagonal cutters, and long nose pliers to loosen and tighten screws where the binding post design does not prohibit the possibility. Failure consists of severe structural damage.

(h) *Functional design criteria for insulation displacement type cross-connect modules used in SAI cabinets*—(1) *General description.* Cross-connect modules normally consist of multiple metallic contact elements that are retained by nonmetallic fixtures. The contact elements are spliced with permanent wire leads compatible for splicing to 22, 24, or 26 gauge cable on one side and configured for the acceptance of recurring connections and disconnections of plastic insulated cross-connect wire on the other side. Cross-connect modules are usually housed in a SAI cabinet. However, modules may receive limited usage in smaller pedestal-type housings and cabinets in the outside plant environment.

(2) *Design and fabrication requirements.* (i) All individual terminals or terminal fields must be enclosed and the terminal enclosures must be totally filled with an encapsulating grease or gel which prevents connection degradation caused by moisture and corrosion. The encapsulant must provide complete encapsulation of terminal metallic connections and surfaces and totally fill all voids and cavities within individual terminal enclosures or terminal field enclosures to prevent ingress of moisture. The encapsulant must not restrict access to the terminal or restrict craft personnel from making connections. The encapsulant must be compatible with the standard materials used in cross-connect hardware and wiring.

(ii) The cross-connect module manufacturer shall make available any nonstandard tools and test apparatus which are required for splicing, placing of jumpers, and the performance of maintenance operations.

(iii) The module shall be designed so that a typical outside plant technician using tools shall be able to terminate cross-connect wire on terminals, or to remove them without causing electrical shorts between any other terminals.

(iv) The pair count sequence terminated on a module shall be easily visible and shall have numerals of at least 0.25 cm (0.10 in.) in height.

(v) Feeder terminations shall be easily distinguished from distribution terminations.

(vi) Tip and ring terminations shall be easily visible and shall be identifiable as described in paragraph (f)(2)(vi) of this section.

(vii) The preferred locations for cross-connect modules to be mounted inside a housing is the same as those for terminals and are described in paragraphs (f)(2)(vii) and (f)(2)(viii) of this section.

(3) *Auxiliary features.* (i) Housings equipped with cross-connect modules shall be equipped with auxiliary test contacts as described in paragraphs (f)(3)(i) and (f)(3)(ii) of this section.

(ii) Special service markers shall be available for cross-connect modules as described in paragraph (f)(3)(iii) of this section.

(iii) Housings equipped with, or designed for, cross-connect modules shall contain a supply of cross-connect wire as described in paragraph (f)(3)(iv) of this section.

(i) *Performance criteria and test procedures for insulation displacement type cross-connect modules*—(1) *General.* Many of the tests described in this section require that the cross-connect module be installed in an appropriate housing in its typical field configuration for testing. Resistance measurements should be made with an electrical device which measures changes in resistance for each test

parameter measured. The tests specified provide an indication of the stability of the electrical connections under the test conditions encountered.

(2) *Environmental requirements.* (i) A fully equipped arrangement of cross-connect modules having approximately 25 special service markers shall successfully complete environmental testing in accordance with paragraphs (e)(3) introductory text through (e)(3)(xiii)(B) of this section.

(ii) *Insulation resistance/high humidity and salt fog exposure.* Insulation resistance measurements shall not be less than 1×10^6 ohms when cross-connect modules are tested by a procedure similar to that described in paragraphs (g)(2)(i) introductory text through (g)(2)(i)(B) of this section.

(iii) *Insulation resistance/simulated rain exposure.* Insulation resistance measurements shall not be less than 1×10^6 ohms when cross-connect modules are tested by a procedure similar to that described in and paragraphs (g)(2)(ii) introductory text through (g)(2)(ii)(B) of this section.

(iv) *Contact resistance.* The change in contact resistance should not exceed 2 milliohms when cross-connect modules are tested by a procedure similar to that described in paragraphs (g)(2)(iii) introductory text through (g)(2)(iii)(B) of this section.

(v) *Fire resistance.* A housing fully equipped with cross-connect modules and jumper wiring shall be tested for fire resistance by a procedure similar to that described in paragraph (g)(2)(iv) of this section.

(vi) *Encapsulant material compatibility.* Cross-connect wire insulation and cross-connect hardware shall exhibit no visible material degradation when tested by the procedure described in paragraph (g)(2)(v) of this section.

(vii) *Encapsulant flow test.* The cross-connect contact encapsulant shall drip no more than 0.5 gram when tested by the procedure described in paragraph (g)(2)(vi) of this section.

(3) *Mechanical requirements*—(i) *Vibration.* A housing fully equipped with cross-connect modules shall be vibration tested in accordance with paragraph (g)(3)(i) of this section.

(ii) *Test connector reliability.* The test connectors supplied with housings intended for cross-connect modules shall successfully complete 100 successive connections as described in paragraphs (g)(3)(v) introductory text through (g)(3)(v)(B) of this section.

(iii) *Service cycle reliability.* A combination of multiple insertions of jumper wires, vibration, and temperature cycling shall be performed on cross-connect modules. The multiple insertions on approximately 100 connections shall be accomplished by 300 operations consisting of insertion, removal and reinsertion of new jumper wire. Contact resistance shall be measured and the final insertion of jumper wire shall not be removed from the connectors but must be subjected to vibration testing in accordance with paragraph (g)(3)(i) of this section and temperature cycled as indicated in Figure 3 in paragraph (e)(3)(ii) of this section for a duration of 72 hours. After vibration and temperature cycling, the average change in contact resistance shall be no greater than 2 milliohms.

(iv) *Jumper wire pull-out resistance.* Test modules that have received no prior conditioning shall be equipped with 100 38 cm (15 in.) jumper connections of the gauges recommended for use with the module using the insertion tool recommended by the cross-connect module manufacturer. With the test samples suitably supported, wires from each sample shall be pulled, one at a time, by a tensile machine at a cross-head speed of 6 centimeters per minute (cm/min) (2.4 inches per minute (in./min)). Wires shall be pulled both perpendicular and parallel to the plane of the cross-connect field and shall withstand a load of at least 1.1 kg (2.5 lb) before pulling out.

(v) *Cable conductor pull-out resistance.* Test modules that have received no prior conditioning shall be equipped with 100 26, 24, and 22 AWG 38 cm (15 in.) cable conductors using the insertion tool recommended by the cross-connect module manufacturer. With the test samples suitably supported, conductors from each sample shall be pulled, one at a time, by a tensile machine at a cross-head speed of 6 cm/min (2.4 in./min). Wires shall be pulled both perpendicular and parallel to the plane of the face of the splice module and shall withstand a load of at least 1.1 kg (2.5 lb) before pulling out.

(4) *Electrical requirements*—(i) *Dielectric strength.* A housing fully equipped with cross-connect modules shall be tested for dielectric strength in accordance with (g)(4) of this section.

(ii) The dielectric strength of a contact within the cross-connect module to contacts on either side shall be tested. The module shall be tested in a dry environment with an ac power source capable of supplying 8 kv at a rate of increase of 500 volts per second, a circuit breaker to open at breakdown, and a voltmeter to record the breakdown potential. Cross-connect modules shall be prepared in accordance with industry accepted splicing techniques with leads trimmed to approximately 38 cm (15 in.). The dielectric strength of each contact to the contacts on either side shall have an average dielectric strength of approximately 5.0 kv.

(5) *Operational requirements*—(i) *Durability.* In order to verify the durability requirements while minimizing the number of test housings required to complete the test program, the contacts selected for tests shall be separately identified and then checked to establish compliance after the various tests have been conducted.

(ii) Twenty-five jumper connections shall be made on each of two contacts chosen at random from a representative sample in an assembled interface unit. After this test, these and surrounding contacts shall be inspected for damage such as cracks or chips in metal or plastic parts. Failure consists of structural damage, open circuits through the connector, or inability to pass the jumper wire pullout tests described in paragraph (i)(3)(iv) of this section.

(iii) Select six contacts at random in a representative interface. On each of these contacts attach any test cord included with the unit as specified under normal use of that cord and then remove the test cord as follows. On sample 1, remove the cord normally ten times. On sample 2, remove the clip ten times by jerking the test leads straight out. In these and the remaining tests, do this without releasing any manual attachment mechanisms. On sample 3, remove ten times by jerking downward at 45° from horizontal; sample 4, upward 45° ten times; sample 5, left 45° ten times; sample 6, right 45° ten times. Check for opens and damage in the test cord, clips, and cross-connect modules. Failure consists of structural damage, open circuits through the connector, or inability of module to pass the test connector reliability, jumper wire pullout, and dielectric strength tests described in paragraphs (i)(3)(ii), (i)(3)(iv), and (i)(4)(ii) of this section.

(j) *Packaging and identification requirements*—(1) *Product identification.* (i) Each housing, terminal block, or cross-connect module shall be permanently marked with the manufacturer's name or trade mark.

(ii) The date of manufacture, model number, serial number and REA assigned designations shall be placed on a decal inside housings. The product identification nomenclature must correspond with the nomenclature used in the manufacturer's quality assurance program.

(2) *Packaging requirements.* (i) Buried plant housings shall be packaged securely in an environmentally safe container to prevent either deterioration

or physical damage to the unit during shipment, handling and storage.

(ii) The product with all the necessary parts shall be shipped in one container unless significant advantages to the user can be obtained otherwise. Packaging of parts in the carton shall be such that the parts become available in the order in which they are needed. The package should be clearly marked as to which end to open. Packages shall be clearly labeled, and correspond to the names given in the instructions.

(iii) Products packed in shipping containers shall be cushioned, blocked, braced, and anchored to prevent movement and damage.

(iv) All products shall be secured to pallets with non-metallic strapping. The strapping and the manner employed shall be of sufficient quantity, width, and thickness to preclude failure during transit and handling.

(v) The use of shrink or stretch film to secure the load to the pallet is permitted. However, such film must be applied over the required strapping.

(vi) Containers that are too large or heavy to be palletized, such as crates, shall be shipped in their own containers. When practical, these containers shall be provided with skids to facilitate fork-lift handling.

(vii) When packaged, the outer cartons shall meet the requirements of the Uniform Freight Classification and the National Motor Freight Classification.

(3) *Container marking requirements.* (i) The package shall be readily identifiable as to the manufacturer, model number, date of manufacture, and serial number.

(ii) The REA assigned housing designation shall be stamped or marked on the outside of the package container with letter and number sizes large enough for easy identification.

(iii) Each package shall be marked with its approximate gross weight.

(iv) All containers carrying delicate or fragile items shall be marked to clearly identify this condition.

(v) All marking shall be clear, legible, and as large as space permits.

(The information and recordkeeping requirements of this section have been approved by the Office of Management and Budget under control number 0572–0059.)

Dated: October 12, 1994.

Bob J. Nash,

Under Secretary, Small Community and Rural Development.

[FR Doc. 94–25758 Filed 10–20–94; 8:45 am]

BILLING CODE 3410–15–P

Farmers Home Administration

7 CFR Part 1951

RIN 0575–AB85

Disaster Set-Aside Program

AGENCY: Farmers Home Administration, USDA.

ACTION: Interim final rule with request for comments.

SUMMARY: The Farmers Home Administration (FmHA) amends its Farmer Programs servicing regulations by adding the Disaster Set-Aside (DSA) Program. This program will be made available to Farmer Program borrowers who operated a farm or ranch in a county where a disaster occurred in 1993 and was declared/designated a disaster area in accordance with FmHA regulations. Under this program, the distressed borrower will have the opportunity to move the next scheduled FmHA annual installment to the end of the loan term. The intended effect is to service disaster victims in an efficient and timely manner while keeping them in business.

DATES: Interim final rule effective October 21, 1994. Written comments must be submitted on or before November 21, 1994.

ADDRESSES: Submit written comments, in duplicate, to the Office of the Chief, Regulations Analysis and Control Branch, FmHA, USDA, Room 6348–S, 14th Street and Independence Avenue, SW., Washington, DC 20250. All written comments will be available for public inspection during regular working hours at the above address.

FOR FURTHER INFORMATION CONTACT: Kimberly R. Laris, Loan Officer, Farmer Programs Loan Servicing Division, Farmers Home Administration, U.S. Department of Agriculture, South Building, 14th Street and Independence Avenue, SW., Washington, DC 20250, Telephone (202) 720–4572.

SUPPLEMENTARY INFORMATION:

Classification

This rule has been determined to be not significant for purposes of Executive Order 12866 and therefore has not been reviewed by OMB.

Intergovernmental Consultation

For the reasons set forth in the final rule related to Notice 7 CFR, part 3015, subpart V (48 FR 29115, June 24, 1983), and FmHA Instruction 1940–J, "Intergovernmental Review of FmHA Programs and Activities" (December 23, 1983), Emergency Loans, Farm Ownership Loans, and Farm Operating Loans are excluded, with the exception of nonfarm enterprise activity, from the scope of Executive Order 12372, which requires intergovernmental consultation with State and local officials. The Soil and Water Loan Program, however, is subject to the provisions of Executive Order 12372.

Programs Affected

These changes affect the following FmHA programs, as listed in the Catalog of Federal Domestic Assistance:

10.404—Emergency Loans
10.406—Farm Operating Loans
10.407—Farm Ownership Loans
10.410—Low Income Housing Loans
10.416—Soil and Water Loans

Environmental Impact Statement

This document has been reviewed in accordance with 7 CFR, part 1940, subpart G, "Environmental Program." FmHA has determined that this action does not constitute a major Federal action significantly affecting the quality of the human environment, and, in accordance with the National Environmental Policy Act of 1969 (Public Law 91–190), an Environmental Impact Statement is not required.

Civil Justice Reform

This document has been reviewed in accordance with Executive Order (E.O.) 12778. It is the determination of FmHA that this action does not unduly burden the Federal Court System in that it meets all applicable standards provided in section 2 of the E.O.

Paperwork Reduction Act

The information collection requirements contained in these regulations have been approved by the Office of Management and Budget (OMB) under the provisions of 44 U.S.C. Chapter 35 and have been assigned OMB control number [0575–0163] in accordance with the Paperwork Reduction Act of 1980 (44 U.S.C. 3507). The interim final rule does not revise or impose any new information collection or recordkeeping requirements from those approved by OMB.

Discussion of Interim Final Rule

FmHA has chosen to publish this regulation as an interim final rule without first publishing a proposed rule due to the nature of the program and the eligibility requirements involved. Eighty percent of the 3,151 counties serviced by FmHA were declared disaster areas in 1993. Due to heavy flooding in the midwest and extreme droughts in the South, considerably more borrowers were affected by disasters in 1993 than in any of the previous five years. This

program will also help those borrowers who are affected by the 1994 flood disaster in the South if they were also affected by the previous disasters in 1993. FmHA is considering extending this program in the future to assist borrowers affected only by the 1994 disaster. In order to prevent massive delinquencies and farm failures, borrowers in a crisis situation must receive immediate financial assistance.

It is for this purpose and by the authority granted the Secretary under the Consolidated Farm and Rural Development Act (CONACT), section 331A (7 U.S.C. 1981a), FmHA has made available the Disaster Set-Aside Program. As provided in section 331A, the Secretary has the authority to defer principal and interest at the request of the borrower on any outstanding loan made, insured, or held by the Secretary under the CONACT, subject to the borrower showing that due to circumstances beyond his/her control, he/she is temporarily unable to continue making payments when due without unduly impairing his/her standard of living. The set-aside program is designed to assist borrowers in financial distress who operated a farm or ranch in a county where a disaster occurred in 1993 and was declared/designated a disaster area as set forth in subpart A of part 1945 of this chapter.

Under this program, farmer programs borrowers can receive immediate financial relief from their FmHA payment obligations in a more expedient manner than under subpart S of part 1951. For example, the application process is simple and easy, unlike the primary loan servicing application under subpart S of part 1951 which requires extensive documentation by both the borrower and the servicing official. There are no additional security requirements to deter the borrower from requesting debt set-aside. On the average, the borrower's installments can be set-aside the same day he/she makes the request, whereas under subpart S of part 1951, it takes an average of 90 days to process an application and restructure a loan.

To comply with the statute, the borrower must be temporarily unable to make the payment being set-aside because of circumstances beyond his/her control. This is demonstrated by requiring that the borrower must have operated a farm or ranch during 1993 in which a disaster occurred and the county was declared/designated a disaster area, or a contiguous county, as set forth in subpart A of part 1945 of this chapter; that the borrower be current or not more than 1 installment behind on any and all farmer program loans, which would assure that all payments prior to the disaster were paid or the loan restructured; that if no other payments have been due on the loan, the projected farm plan for the disaster year shows that the payment could have been paid under normal conditions; and that the borrower's actual records for the disaster year must show that, because of the disaster, the borrower's projected income was reduced to an amount that would prevent payment of all family living and operating expenses and paying amounts due FmHA and/or other creditors.

FmHA projects that approximately 60,000 borrowers affected by 1993 disasters will request assistance under the set-aside program. Of these borrowers, the majority have installments that came due January 1, 1994. If these installments are not paid by January 1, 1995, or otherwise set-aside, the borrower will be two installments behind and will no longer be eligible to receive disaster set-aside assistance. Borrowers more than one payment behind will be able to receive more assistance through FmHA's loan servicing program under subpart S of part 1951 of this chapter than through the debt set-aside program. However, borrowers who cannot obtain servicing through subpart S of part 1951 of this chapter may be able to cure their delinquency with set-aside assistance alone. The set-aside program will be better for some borrowers than servicing through subpart S of part 1951 of this chapter since the set-aside will be a faster process, eligibility requirements are easier to meet, paperwork is less, and some borrowers' financial distress can be resolved with only one payment deferred. The program will allow some borrowers to use sources other than FmHA to maintain their farm operation and allow them to work out their financial difficulty over the next year or so. Other borrowers may prefer to use the year to voluntarily liquidate. This regulation will, therefore, provide options to prevent the foreclosure of borrowers in both of these instances. However, borrowers who are not eligible for the DSA program, or who need more extensive servicing, will still have the opportunity to be considered for FmHA's primary loan servicing program as set forth in subpart S of part 1951 of this chapter.

The set-aside program allows eligible borrowers to move one FmHA annual installment for each loan to the end of the loan term, thereby quickly eliminating the immediate financial stress. The installment set-aside may be the one due immediately after the disaster or, if that installment is paid to the neglect of other creditors or family living and operating expenses, then the next scheduled installment may be set-aside. Borrowers who received primary loan servicing after the disaster will not be eligible for the disaster set-aside, as restructuring of the account already resolved the financial distress for the current and next production/marketing period. Borrowers whose farmer program loans have been accelerated will also not be eligible for disaster set-aside as their financial situation is much more severe than the borrower who is only one installment behind. These type of borrowers have already been processed through 1951–S primary and preacquisition preservation loan servicing resulting in no servicing granted. The disaster set-aside program cannot offer more favorable options than those provided in subpart S of part 1951.

Based on past experience, the Agency has found that a borrower needs a minimum of one to two years to recover from a disaster. Therefore, in order for an installment to be set-aside, the term remaining on the loan must equal or exceed two years from the date on which the installment set-aside was due. This requirement automatically eliminates all one-year loans and any loans that will mature in less than two years. Borrowers with less than two years remaining on the loan will receive greater benefit from the servicing options available under subpart S of part 1951 of this chapter as restructuring could possibly provide longer repayment terms for the entire debt.

The set-aside amount will include unpaid interest and any principal that would be credited to the borrower's account as if the payment were paid on the due date. This amount will not exceed the annual scheduled installment being set-aside minus any portion of the installment paid prior to the set-aside addendum being signed. The unpaid interest is set-aside in order that the remaining amortized installments can be credited properly to principal and interest. Interest will continue to accrue on any principal amount set-aside at the same rate charged on the non-set-aside portion of the note. The amount set-aside, including interest accrual on any principal set-aside, will be due on or before the final due date of the loan. The interest amount set-aside will not accrue interest, as permitted by section 331A of the CONACT.

Borrowers who apply for both set-aside and 1951–S servicing, must choose which program they wish to accept. Borrowers cannot choose both because the options are overlapping

servicing tools geared toward borrower financial stability. The program not chosen will automatically be withdrawn once the borrower either signs the set-aside addendum or the promissory note(s) restructured under 1951–S, whichever is applicable. This assures the borrower's eligibility for the program chosen prior to the other request being withdrawn. If the set-aside program is chosen and any 1951–S request is withdrawn, the borrower will not lose any future servicing rights under subpart S of part 1951 of this chapter. The borrower may re-apply for 1951–S servicing at any time after the set-aside addendum is signed. However, if a borrower is offered servicing under subpart S of part 1951 of this chapter while waiting for notice of eligibility for the set-aside and the time limits for 1951–S servicing expire without timely response by the borrower, the borrower will lose the rights to 1951–S servicing.

The Agency anticipates that circumstances may arise beyond the borrower's control that could warrant restructuring the debt prior to the next scheduled installment coming due. In these cases, since the set-aside brings the account current, the borrower may be considered for a writedown or net recovery buyout as set forth in subpart S of part 1951 and/or granted assistance in accordance with § 1941.14 of subpart A of part 1941 of this chapter only if the set-aside is reversed and the addendum cancelled. If the set-aside is reversed, the account will reflect the current payment status as if the payment had never been set-aside.

In the case of entity borrowers, all members of the entity liable for the debt must apply for set-aside in order for FmHA to consider the application. This procedure is consistent with that under subpart S of part 1951.

The set-aside program will be available only until July 1, 1995. This timeframe will provide those borrowers who have already made their payment that was due after the disaster ample time to determine if the loss they incurred from the disaster will affect their repayment ability for the following year.

List of Subjects in 7 CFR Part 1951

Account servicing, Credit, Loan programs—Agriculture, Loan programs—Housing and community development, Low and moderate income housing loans—Servicing, Debt restructuring.

Accordingly, part 1951, Chapter XVIII, title 7, Code of Federal Regulations is amended as follows:

PART 1951—SERVICING AND COLLECTIONS

1. The authority citation for part 1951 continues to read as follows:

Authority: 7 U.S.C. 1989; 42 U.S.C. 1480; 5 U.S.C. 301, 7 CFR 2.23 and 2.70.

2. Subpart T of part 1951, consisting of §§ 1951.951 through 1951.1000, is added to read as follows:

Subpart T—Disaster Set-Aside Program

Sec.
1951.951 Purpose.
1951.952 General.
1951.953 Notification and request for DSA.
1951.954–1951.956 [Reserved]
1951.957 Eligibility determination and processing.
1951.958 Supervision and servicing of borrowers with DSA.
1951.959 Exception authority.
1951.960–1951.999 [Reserved]
1951.1000 OMB control number.

Subpart T—Disaster Set-Aside Program

§ 1951.951 Purpose.

This subpart sets forth the policies and procedures for establishing and implementing the Disaster Set-Aside (DSA) Program. The DSA program is available to Farmer Programs (FP) borrowers, as defined in subpart S of this part, who suffered losses as a result of a 1993 disaster. FP loans that may be serviced under this subpart include Farm Ownership (FO), Operating (OL), Soil and Water (SW), Emergency (EM), Economic Emergency (EE), Special Livestock (SL), Economic Opportunity (EO), Softwood Timber (ST), Recreation (RL), and Rural Housing loans for farm service buildings (RHF). Nonprogram (NP) farm type loans may be serviced under this subpart for borrowers who also have FP loans. FP borrowers have until July 1, 1995, to request disaster set-aside and submit a complete application. Partial applications will not be acceptable. Requests received after July 1, 1995, will not be accepted.

§ 1951.952 General.

DSA is a program whereby borrowers who are current or not more than one installment behind on any and all FP loans may be permitted to move one Farmers Home Administration (FmHA) scheduled annual installment(s) for each eligible FP loan to the end of the loan term. The intent of this program is to relieve some of the borrower's immediate financial stress caused by the disaster and avoid foreclosure by the Government.

§ 1951.953 Notification and request for DSA.

(a) *Notification.* The County Supervisor will use Form Letter 1951–T–1 to notify FP borrowers of the availability of the DSA program and how to apply. All FP borrowers, as defined in § 1951.906 of subpart S of this part, who have not been accelerated and who operated a farm or ranch in a county during 1993 in which a disaster occurred and was declared/designated as a disaster area or contiguous county, as set forth in subpart A of part 1945 of this chapter, will be notified within 10 days of the effective date of this subpart. However, those borrowers whose FP loan(s) has been accelerated, or restructured after a 1993 disaster, will not be notified under this paragraph. Notification of the DSA program will not affect the notification requirements set forth in subpart S of this part.

(b) *Request for DSA.* All FP borrower liable for the debt must provide the County Office with the information described in paragraphs (b) (1) and (2) of this section on or before July 1, 1995 to request DSA. Borrowers may only be considered for DSA one time.

(1) A written request for DSA signed by all parties liable for the debt, and

(2) Actual production, income, and expense figures for the production/marketing period in which the 1993 disaster occurred, unless this information is already in the borrower case file.

(c) *Eligibility requirements.* The County Supervisor will determine whether the borrower meets the following eligibility requirements:

(1) The borrower's FP loan(s) has not been accelerated.

(2) The borrower operated a farm or ranch in a county declared/designated a disaster area as set forth in subpart A of part 1945 of this chapter or a county contiguous to such an area based on a 1993 disaster. The borrower must have been operating the farm or ranch at the time of the disaster.

(3) The borrower has acted in good faith as defined in § 1951.906 of subpart S of this part.

(4) All nonmonetary defaults have been resolved. This means that even though the borrower has acted in good faith, he/she may still be in default for reasons, such as, but not limited to: no longer farming, prior lienholder foreclosure, bankruptcy, not properly maintaining chattel and real estate security, not properly accounting for the sale of security as agreed, or not

carrying out any other agreements made with FmHA.

(5) The borrower is current or not more than one installment behind on any and all FP loans at the time the scheduled installment(s) will be set-aside as reflected on the Finance Office 540 or 582 status reports.

(6) The borrower's projected income for the disaster year was reduced as a result of the disaster, causing insufficient income available to pay all family living and operating expenses, debts to other creditors, and FmHA. This determination will be based on the borrower's actual production and income and expense records for the disaster year.

(7) The term remaining on the loan(s) receiving DSA equals or exceeds 2 years from the due date of the installment being set-aside.

(8) All FP and NP farm type loans will be current after the scheduled installments are set-aside.

(9) The borrower's FP loan(s) was not restructured under subpart S of this part after the 1993 disaster.

§§ 1951.954–1951.956 [Reserved]

§ 1951.957 Eligibility determination and processing.

(a) *Eligibility determination.* Upon receipt of a DSA request, the County Supervisor will determine whether the borrower meets the eligibility requirements set forth in § 1951.953(c) of this subpart and notify the borrower of the results within 30 days from the date of the DSA request. The file shall contain documentation to reflect the date of request and the date the borrower was notified and the addendum signed.

(1) The borrower shall be provided up to 30 days to sign Exhibit A of this subpart, (available in any FmHA Office). If Exhibit A is not signed within 30 days and prior to the borrower becoming more than one installment behind, the DSA request will be withdrawn and the borrower notified of their rights to an appeal review in accordance with subpart B of part 1900 of this chapter. Note: If borrower becomes more than one installment behind, he/she is no longer eligible.

(2) Pending requests for primary loan servicing will continue to be considered as set forth in subpart S of this part. However, borrowers cannot accept servicing under both programs.

(i) Borrowers determined eligible for the DSA program and primary loan servicing in accordance with subpart S of this part will be required to choose between the two program requests. The choice will be noted in the borrower case file and initialed by the borrower.

(ii) Borrowers may choose to proceed with the DSA program prior to a decision being made for primary loan servicing such as in cases where a decision will not be available on the primary loan servicing application prior to the borrower becoming more than one installment behind.

(iii) The application for the program not chosen will automatically be withdrawn at the time the installment(s) is set-aside or the loan(s) restructured, whichever is applicable. This voluntary withdrawal is not appealable.

(iv) By signing Exhibit A of this subpart, (available in any FmHA Office), the borrower agrees to the withdrawal of any pending request for primary loan servicing. The borrower may resubmit a request at any time according to subpart S of this part.

(b) *Processing.* Installments will be set-aside as set forth in this paragraph.

(1) All borrowers liable for the debt will sign Exhibit A of this subpart, (available in any FmHA Office), for each loan installment set-aside. Exhibit A may be modified with the assistance of the Office of the General Counsel to comply with individual State laws.

(2) Only one unpaid installment for each FP loan may be set-aside.

(i) The installment set-aside will be the first scheduled annual installment due immediately after the disaster occurred, or if that installment is paid current, the next scheduled annual installment. Set-aside will not be granted on the loan if both of these installments are paid current.

(ii) The amount set-aside will not exceed the annual scheduled installment being set-aside minus any portion of that installment paid prior to Exhibit A of this subpart, (available in any FmHA Office), being signed by the borrower. This amount will include the unpaid interest and any principal that would be credited to the account as if the installment were paid on the due date.

(iii) Recoverable cost items charged to FO, SW, and RHF loans may be set-aside with the annual installment. Cost items identified with a loan number different from the parent loan cannot be set-aside.

(3) Interest will accrue on any principal amount set-aside at the same rate charged the non-set-aside portion. Interest will not accrue on the interest portion set-aside.

(4) The amount set-aside, including interest accrual on any principal set-aside, will be due on or before the final due date of the loan.

(5) There are no additional security requirements attached to the DSA program. All existing security instruments will remain in effect.

(6) The original Exhibit A of this subpart, (available in any FmHA Office), will be stapled to the respective original promissory note or assumption agreement filed in the County Office operational file. A copy will be stapled to the copy of the promissory note or assumption agreement filed in position 2 of the borrower's case file.

(7) Exhibit A of this subpart, (available in any FmHA Office), will be used as the source document to process the DSA through the Automated Discrepancy Processing System (ADPS). Until automation capabilities are implemented, Exhibit A should be placed in a pending file and the borrower's account flagged "51–S." The Finance Office borrower account status reports will reflect the amount(s) set-aside for each loan.

(8) The National Automated Tracking System (AGCREDIT) will be utilized to document the notification and servicing scheme associated with this subpart

(9) The loan(s) will be considered current after the installment(s) is set-aside and, therefore, debt writedown or net recovery buyout may not be subsequently approved under subpart S of this part, and loans may not be made under § 1941.14 of subpart A of part 1941 of this chapter, unless the set-aside is reversed as set forth in § 1951.958(b)(2) of this subpart or the borrower becomes delinquent on the non-set-aside portion.

(c) *Adverse determination.* Borrowers who do not meet the requirements for the DSA program will be notified of their appeal rights in accordance with subpart B of part 1900 of this chapter. If the borrower becomes more than one installment behind on any FP loan while processing the DSA request, or while an appeal is being considered, and the second installment cannot be paid current prior to Exhibit A of this subpart, (available in any FmHA Office), being signed, the DSA request will be denied and/or any associated appeal request withdrawn. Being denied set-aside based on the failure to meet the not-more-than-one-installment-behind requirement is not an appealable issue, but is reviewable. The letter to the borrower will describe in full detail all the reasons for the adverse decision. Borrowers denied DSA will continue to be serviced in accordance with subpart S of this part.

§ 1951.958 Supervision and servicing of borrowers with DSA.

(a) *Supervision.* Borrower supervision will continue as set forth in subpart B of part 1924 of this chapter.

(b) *Servicing.* FP loans will continue to be serviced in accordance with the appropriate servicing regulations.

(1) Payments applied to the amount set-aside will be processed as a miscellaneous payment on Form FmHA 451–2, "Schedule of Remittances."

(2) The set-aside will be reversed and Exhibit A of this subpart, (available in any FmHA Office), cancelled if, prior to the first scheduled installment due date after set-aside, the current borrower needs a writedown in order to develop a feasible plan or a net recovery buyout in accordance with subpart S of this part or loan assistance set forth in § 1941.14 of subpart A of part 1941 of this chapter. The Finance Office must be notified by memorandum of the set-aside reversal prior to the time assistance is granted. A copy of the memorandum will be attached to Exhibit A and remain stapled to the promissory note or assumption agreement as indicated in § 1951.957(b)(6) of this subpart.

(3) In cases not covered by paragraph (b)(2) of this section, the set-aside will be considered automatically cancelled whenever a program loan receives primary loan servicing.

(4) Releases of normal income security will continue as set forth in subpart A of part 1962 of this chapter.

§ 1951.959 Exception authority.

The Administrator may, in individual cases, make an exception to any requirement or provision of this subpart or address any omission of this subpart which is not inconsistent with the authorizing statute or other applicable law if it is determined that application of the requirement or provision or failure to take action in the case of an omission would adversely affect the Government's interest. The Administrator will exercise this authority upon the request of the State Director with the recommendation of the Assistant Administrator for Farmer Programs, or upon request initiated by the Assistant Administrator for Farmer Programs. Requests for exception must be made in writing and supported with documentation to explain the adverse effect and proposed alternative courses of action, and to show how the adverse effect will be eliminated or minimized if the exception is granted.

§§ 1951.960–1951.999 [Reserved]

§ 1951.1000 OMB control number.

The collection of information requirements in this regulation have been approved by the Office of Management and Budget and assigned OMB control number 0575–0163. Public reporting burden for this collection of information is estimated to be 15 minutes per response, including time for reviewing instructions, searching existing data sources, gathering and maintaining the data needed, and completing and reviewing the collection of information. Send comments regarding this burden estimate or any other aspect of this collection of information, including suggestions for reducing this burden, to Department of Agriculture, Clearance Office OIRM, Room 404–W, Washington D.C. 20250; and to the Office of Management and Budget, Paperwork Reduction Project (OMB# 0575–0163), Washington, D.C. 20503.

Dated: August 26, 1994.

Bob Nash,

Under Secretary, Small Community and Rural Development.

[FR Doc. 94–26160 Filed 10–20–94; 8:45 am]

BILLING CODE 3410–07–U

FARM CREDIT SYSTEM INSURANCE CORPORATION

12 CFR Part 1403

RIN 3055–AAOO

Privacy Act Regulations

AGENCY: Farm Credit System Insurance Corporation.

ACTION: Interim rule with request for comments.

SUMMARY: The Farm Credit System Insurance Corporation (Corporation) issues an interim rule to implement the requirements of the Privacy Act, 5 U.S.C. 552a, relating to the receipt and processing of requests for Corporation Privacy Act records, requests for amendment of records, fees to be charged, procedures to be followed in processing requests for records, and criminal penalties. Also, the interim rule includes a provision relating to the use of a specific exemption, 5 U.S.C. 552(k)(5), for a system of records. The regulations will assist the public in requesting Privacy Act records.

DATES: Effective November 21, 1994. Written comments are due November 21, 1994. Notice of the effective date will be published in the **Federal Register**.

ADDRESSES: Written comments may be mailed (in triplicate) to Mary A. Creedon, Chief Operating Officer, in care of Cindy Nicholson, Farm Credit System Insurance Corporation, McLean, Virginia 22102–0826. Copies of all communications received will be available for examination by interested parties in the offices of the Farm Credit System Insurance Corporation.

FOR FURTHER INFORMATION CONTACT:

Mark McBeth, Privacy Act Officer, Farm Credit System Insurance Corporation, McLean, Virginia 22102–0826, (703) 883–4345, TDD (703) 883–4444.

or

Jane M. Virga, Senior Attorney, Office of General Counsel, Farm Credit System Insurance Corporation, McLean, Virginia 22102–0826, (703) 883–4071, TDD (703) 883–4444.

SUPPLEMENTARY INFORMATION: On May 13, 1994, the Corporation proposed regulations setting forth procedures to be used in requesting access to and responding to requests for Corporation Privacy Act records. *See* 59 FR 24988. Essentially, the Corporation proposed regulations that provided that all requests for access to Corporation Privacy Act records must be in writing and signed by the subject of the record, adequately describe the material sought, and be sent to the Corporation in McLean, Virginia. The proposed regulations delegated to the Privacy Act Officer authority to make initial determinations concerning requests for access to records. The proposed regulations provided procedures for requests for amendment of records and the appeal of an initial adverse determination on a request to amend a record. Finally, the proposed regulations provided a fee structure. The Corporation did not receive any written comments in response to the proposed regulations.

After publication of the proposed rule, the Corporation determined that a specific exemption was appropriate for a system of records. The Corporation now wishes to adopt a regulation providing for the specific exemption under 5 U.S.C. 552(k)(5) of a system of records pertaining to the personnel security files of the agency. The head of an agency may promulgate rules to exempt any system of records within the agency from subsections (c)(3), (d), (e)(1), (e)(4) (G), (H), and (I), and (f) of section 552a of title 5, United States Code, if the system of records is investigatory material compiled solely for the purpose of determining suitability, eligibility, or qualifications for Federal civilian employment, but only to the extent that the disclosure of such material would reveal the identity of a source who furnished information to the government under an express promise that the identity of the source would be held in confidence.

In order to ensure appropriate maintenance and use of Corporation records, as well as orderly and timely

access to Corporation records, it was determined that the regulation should be adopted as an interim rule. However, comments are sought on this regulation.

The Corporation now adopts 12 CFR part 1403 as an interim rule.

List of Subjects in 12 CFR Part 1403

Archives and records, Bonds, Information, Insurance, Privacy, Records.

For the reasons set out in the preamble, part 1403 of Chapter XIV, title 12 of the Code of Federal Regulations is added to read as follows:

PART 1403—PRIVACY ACT REGULATIONS

Sec.
1403.1 Purpose and scope.
1403.2 Definitions.
1403.3 Procedures for requests pertaining to individual records in a record system.
1403.4 Times, places, and requirements for identification of individuals making requests.
1403.5 Disclosure of requested information to individuals.
1403.6 Special procedures for medical records.
1403.7 Request for amendment to record.
1403.8 Agency review of request for amendment of record.
1403.9 Appeal of an initial adverse determination of a request to amend a record.
1403.10 Fees for providing copies of records.
1403.11 Criminal penalties.
1403.12 Exemptions.

Authority: Secs. 5.58, 5.59 of the Farm Credit Act (12 U.S.C. 2277a–7, 2277a–8); 5 U.S.C. app. 3, 5 U.S.C. 552a.

§ 1403.1 Purpose and scope.

(a) This part is published by the Farm Credit System Insurance Corporation pursuant to the Privacy Act of 1974 (Pub. L. 93–579, 5 U.S.C. 552a) which requires each Federal agency to promulgate rules to establish procedures for notification and disclosure to an individual of agency records pertaining to that person, and for review of such records.

(b) The records covered by this part include:

(1) Personnel and employment records maintained by the Farm Credit System Insurance Corporation not covered by §§ 293.101 through 293.108 of the regulations of the Office of Personnel Management (5 CFR 293.101 through 293.108); and

(2) Other records contained in record systems maintained by the Farm Credit System Insurance Corporation.

(c) This part does not apply to any records maintained by the Farm Credit System Insurance Corporation in its capacity as a receiver or conservator.

§ 1403.2 Definitions.

For the purposes of this part:

(a) *Agency* means the Farm Credit System Insurance Corporation. It does not include the Farm Credit System Insurance Corporation when it is acting as a receiver or a conservator;

(b) *Individual* means a citizen of the United States or an alien lawfully admitted for permanent residence;

(c) *Maintain* includes maintain, collect, use, or disseminate;

(d) *Record* means any item, collection, or grouping of information about an individual that is maintained by an agency including, but not limited to, that person's education, financial transactions, medical history, and criminal or employment history, and that contains that person's name, or the identifying number, symbol, or other identifying particular assigned to the individual, such as a finger or voice print or photograph;

(e) *Routine use* means, with respect to the disclosure of a record, the use of such record for a purpose that is compatible with the purpose for which it was collected;

(f) *Statistical record* means a record in a system of records maintained for statistical research or reporting purposes only and not used in whole or in part in making any determination about an identifiable individual, except as provided by 13 U.S.C. 8;

(g) *System of records* means a group of any records under the control of any agency from which information is retrieved by the name of an individual or by some identifying number, symbol, or other identifying particular assigned to the individual.

§ 1403.3 Procedures for requests pertaining to individual records in a record system.

(a) Any present or former employee of the Farm Credit System Insurance Corporation seeking access to that person's official civil service records maintained by the Farm Credit System Insurance Corporation shall submit a request in such manner as is prescribed by the Office of Personnel Management.

(b) Individuals shall submit their requests in writing to the Privacy Act Officer, Farm Credit System Insurance Corporation, McLean, Virginia 22102–0826, when seeking to obtain the following information from the Farm Credit System Insurance Corporation:

(1) Notification of whether the agency maintains a record pertaining to that person in a system of records;

(2) Notification of whether the agency has disclosed a record for which an accounting of disclosure is required to be maintained and made available to that person;

(3) A copy of a record pertaining to that person or the accounting of its disclosure; or

(4) The review of a record pertaining to that person or the accounting of its disclosure.

The request shall state the full name and address of the individual, and identify the system or systems of records believed to contain the information or record sought.

§ 1403.4 Times, places, and requirements for identification of individuals making requests.

The individual making written requests for information or records ordinarily will not be required to verify that person's identity. The signature upon such requests shall be deemed to be a certification by the requester that he or she is the individual to whom the record pertains, or the parent of a minor, or the duly appointed legal guardian of the individual to whom the record pertains. The Privacy Act Officer, however, may require such additional verification of identity in any instance in which the Privacy Act Officer deems it advisable.

§ 1403.5 Disclosure of requested information to individuals.

(a) The Privacy Act Officer shall, within a reasonable period of time after the date of receipt of a request for information of records:

(1) Determine whether or not such request shall be granted;

(2) Notify the requester of the determination, and, if the request is denied, of the reasons therefor; and

(3) Notify the requester that fees for reproducing copies of records may be charged as provided in § 1403.10.

(b) If access to a record is denied because the information therein has been compiled by the Farm Credit System Insurance Corporation in reasonable anticipation of a civil or criminal action proceeding, the Privacy Act Officer shall notify the requester of that person's right to judicial appeal under 5 U.S.C. 552a(g).

(c) (1) If access to a record is granted, the requester shall notify the Privacy Act Officer whether the requested record is to be copied and mailed to the requester or whether the record is to be made available for personal inspection.

(2) A requester who is an individual may be accompanied by an individual selected by the requester when the record is disclosed, in which case the requester may be required to furnish a written statement authorizing the discussion of the record in the presence of the accompanying person.

(d) If the record is to be made available for personal inspection, the

requester shall arrange with the Privacy Act Officer a mutually agreeable time in the offices of the Farm Credit System Insurance Corporation for inspection of the record.

§ 1403.6 Special procedures for medical records.

Medical records in the custody of the Farm Credit System Insurance Corporation which are not subject to Office of Personnel Management regulations shall be disclosed either to the individual to whom they pertain or that person's authorized or legal representative or to a licensed physician named by the individual.

§ 1403.7 Request for amendment to record.

(a) If, after disclosure of the requested information, an individual believes that the record is not accurate, relevant, timely, or complete, that person may request in writing that the record be amended. Such a request shall be submitted to the Privacy Act Officer and shall identify the system of records and the record or information therein, a brief description of the material requested to be changed, the requested change or changes, and the reason for such change or changes.

(b) The Privacy Act Officer shall acknowledge receipt of the request within 10 days (excluding Saturdays, Sundays, and legal holidays) and, if a determination has not been made, advise the individual when that person may expect to be advised of action taken on the request. The acknowledgment may contain a request for additional information needed to make a determination.

§ 1403.8 Agency review of request for amendment of record.

Upon receipt of a request for amendment of a record, the Privacy Act Officer shall:

(a) Correct any portion of a record which the individual making the request believes is not accurate, relevant, timely, or complete and thereafter inform the individual in writing of such correction, or

(b) Inform the individual in writing of the refusal to amend the record and of the reasons therefor, and advise that the individual may appeal such determination as provided in § 1403.9.

§ 1403.9 Appeal of an initial adverse determination of a request to amend a record.

(a) Not more than 10 days (excluding Saturdays, Sundays, and legal holidays) after receipt by an individual of an adverse determination on the individual's request to amend a record or otherwise, the individual may appeal to the Chief Operating Officer, Farm Credit System Insurance Corporation, McLean, Virginia 22102–0826.

(b) The appeal shall be by letter, mailed or delivered to the Chief Operating Officer, Farm Credit System Insurance Corporation, McLean, Virginia 22102–0826. The letter shall identify the records involved in the same manner they were identified to the Privacy Act Officer, shall specify the dates of the request and adverse determination, and shall indicate the expressed basis for that determination. Also, the letter shall state briefly and succinctly the reasons why the adverse determination should be reversed.

(c) The review shall be completed and a final determination made by the Chief Operating Officer not later than 30 days (excluding Saturdays, Sundays, and legal holidays) from receipt of the request for such review, unless the Chief Operating Officer extends such 30-day period for good cause. If the 30-day period is extended, the individual shall be notified of the reasons therefor.

(d) If the Chief Operating Officer refuses to amend the record in accordance with the request, the individual shall be notified of the right to file a concise statement setting forth that person's disagreement with the final determination and that person's right under 5 U.S.C. 552a(g)(1)(A) to a judicial review of the final determination.

(e) If the refusal to amend a record as requested is confirmed, there shall be included in the disputed portion of the record a copy of the concise statement filed by the individual together with a concise statement of the reasons for not amending the record as requested. Such statements will be included when disclosure of the disputed record is made to persons and agencies as authorized under 5 U.S.C. 552a.

§ 1403.10 Fees for providing copies of records.

Fees for providing copies of records shall be charged in accordance with §§ 1402.22 and 1402.24 of this chapter.

§ 1403.11 Criminal penalties.

Section 552a(i)(3) of the Privacy Act (5 U.S.C. 552a(i)(3)) makes it a misdemeanor, subject to a maximum fine of $5,000, to knowingly and willfully request or obtain any record concerning any individual from an agency under false pretenses. Sections 552a(i) (1) and (2) of the Act (5 U.S.C. 552a(i) (1), (2)) provide penalties for violation by agency employees of the Act or regulations established thereunder.

§ 1403.12 Exemptions.

Specific. Pursuant to 5 U.S.C. 552a(k)(5), the investigatory material compiled for law enforcement purposes in the following system of records is exempt from subsections (c)(3), (d), (e)(1), (e)(4) (G), (H), and (I), and (f) of 5 U.S.C. 552a and from the provisions of this part:

Personnel Security Files—FCSIC.

Dated: October 18, 1994.

Curtis M. Anderson,

Secretary to the Board, Farm Credit System Insurance Corporation.

[FR Doc. 94–26178 Filed 10–20–94; 8:45am]

BILLING CODE 6710–01–P

DEPARTMENT OF TRANSPORTATION

Federal Aviation Administration

14 CFR Part 121

[Docket No. 27065; Amendment No. 121–237]

RIN 2120–AE43

Alcohol Misuse Prevention Program for Personnel Engaged in Specified Aviation Activities

AGENCY: Federal Aviation Administration (FAA), DOT.

ACTION: Technical amendment.

SUMMARY: This document contains technical amendments to the final rule establishing the alcohol misuse prevention program (AMPP). The final rule was published February 15, 1994. These amendments correct typographical errors or clarify provisions to reflect the FAA's actual intent.

EFFECTIVE DATE: October 21, 1994.

FOR FURTHER INFORMATION CONTACT: Office of Aviation Medicine, Drug Abatement Division (AMA–800), Federal Aviation Administration, 400 7th Street, SW., Washington, DC 20590; telephone (202) 366–6710.

SUPPLEMENTARY INFORMATION:

Availability of Notice

Any person may obtain a copy of this notice by submitting a request to the Federal Aviation Administration, Office of Public Affairs, Attn: Public Inquiry Center (APA–230), 800 Independence Avenue, SW., Washington, DC 20591, or by calling (202) 267–3484. Requests must include the notice number of this notice.

Persons interested in being placed on a mailing list for future rulemaking actions should request a copy of Advisory Circular 11–2A. Notice of

Proposed Rulemaking Distribution System, which describes the application procedures.

Background

On February 15, 1994, the FAA published a final rule establishing the AMPP for the aviation industry (59 FR 7380). Since the publication of the final rule, the FAA identified six items requiring editorial amendment to correct typographical errors or to clarify provisions to reflect the FAA's actual intent. These revisions will facilitate implementation of the final rule.

List of Subjects in 14 CFR Part 121

Air carriers, Aircraft, Aircraft pilots, Airmen, Airplanes, Air transportation, Alcohol, Alcoholism, Aviation safety, Safety, and Transportation.

The FAA provides notice of the following amendments to 14 CFR part 121:

PART 121—CERTIFICATION AND OPERATIONS: DOMESTIC, FLAG, AND SUPPLEMENTAL AIR CARRIERS AND COMMERCIAL OPERATORS OF LARGE AIRCRAFT

1. The authority citation for part 121 continues to read as follows:

Authority: 49 U.S.C. 1354(a), 1355, 1356, 1357, 1401, 1421–1430, 1485, and 1502 (revised, Pub. L. 102–143, October 28, 1991); 49 U.S.C. 106(g) (revised, Pub. L. 97–449, January 12, 1983).

Appendix J to Part 121—Alcohol Misuse Prevention Program

2. In section IV, subparagraphs 2(a) and 3(c) of paragraph A are revised to read as follows:

* * * * *

IV. Handling of Test Results, Record Retention, and Confidentiality

A. Retention of Records

* * * * *

2. * * *

(a) *Five years.* Records of employee alcohol test results with results indicating an alcohol concentration of 0.02 or greater, records related to other violations of §§ 65.46a, 121.458, or 135.253 of this chapter, documentation of refusals to take required alcohol tests, calibration documentation, employee evaluations and referrals, and copies of any annual reports submitted to the FAA under this appendix shall be maintained for a minimum of 5 years.

* * * * *

3. * * *

(c) Records related to other violations of §§ 65.46a, 121.458, or 135.253 of this chapter.

* * * * *

3. In section V, paragraph B, subparagraph 1 of paragraph C, and paragraph D are revised to read as follows:

* * * * *

V. Consequences for Employees Engaging in Alcohol-Related Conduct

* * * * *

B. Permanent Disqualification From Service

An employee who violates §§ 65.46a(c), 121.458(c), or 135.253(c) of this chapter, or who engages in alcohol use that violates another alcohol misuse provision of §§ 65.46a, 121.458, or 135.253 of this chapter and had previously engaged in alcohol use that violated the provisions of §§ 65.46a, 121.458, or 135.253 of this chapter after becoming subject to such prohibitions is permanently precluded from performing for an employer the safety-sensitive duties the employee performed before such violation.

C. * * *

1. An employer who determines that a covered employee who holds an airman medical certificate issued under part 67 of this chapter has engaged in alcohol use that violated the alcohol misuse provisions of §§ 65.46a, 121.458, or 135.253 of this chapter shall notify the Federal Air Surgeon within 2 working days.

* * * * *

D. * * *

1. Except as provided in subparagraph 2 of this paragraph D, each employer shall notify the FAA within 5 working days of any covered employee who holds a certificate issued under 14 CFR part 61, part 63, or part 65 who has refused to submit to an alcohol test required under this appendix. Notifications should be sent to: Federal Aviation Administration, Aviation Standards National Field Office, Airmen Certification Branch, AVN–460, P.O. Box 25082, Oklahoma City, OK 73125.

2. An employer is not required to notify the above office of refusals to submit to pre-employment alcohol tests or refusals to submit to return to duty tests.

* * * * *

4. In section VII, subparagraph 2(b) of paragraph A, is revised to read as follows:

* * * * *

VII. Employer's Alcohol Misuse Prevention Program

A. * * *

2. * * *

(b) No employer shall use a contractor company's employee who is not subject to the employer's AMPP unless the employer has first determined that the employee is subject to the contractor company's FAA-mandated AMPP.

* * * * *

Issued in Washington, DC, on October 17, 1994.

Michael E. Chase,

Acting Assistant Chief Counsel, Office of the Chief Counsel.

[FR Doc. 94–26066 Filed 10–20–94; 8:45 am]

BILLING CODE 4910–13–M

DEPARTMENT OF THE TREASURY

Customs Service

19 CFR Part 111

Annual User Fee for Customs Broker Permit

AGENCY: Customs Service, Treasury.

ACTION: Notice of due date for broker user fee.

SUMMARY: This is to advise Customs brokers that for 1995 the annual user fee of $125 that is assessed for each permit held by an individual, partnership, association or corporate broker is due by January 3, 1995. This announcement is being published to comply with the Tax Reform Act of 1986.

DATES: Due date for fee: January 3, 1995.

FOR FURTHER INFORMATION CONTACT: Gary Rosenthal, Entry Operations Branch, (202) 927–0380.

SUPPLEMENTARY INFORMATION: Section 13031 of the Consolidated Omnibus Budget Reconciliation Act of 1985 (Pub. L. 99–272) established that an annual user fee of $125 is to be assessed for each Customs broker permit held by an individual, partnership, association or corporation. This fee is set forth in the Customs Regulations in § 111.96 (19 CFR 111.96).

Section 111.96, Customs Regulations, provides that the fee is payable for each calendar year in each district where a broker has a permit to do business by the due date which will be published in the **Federal Register** annually.

Section 1893 of the Tax Reform Act of 1986 (Pub. L. 99–514) provides that notices of the date on which payment is due of the user fee for each broker permit shall be published by the Secretary of the Treasury in the **Federal Register** by no later than 60 days before such due date. This document notifies brokers that for 1995, the due date for payment of the user fee is January 3, 1995. It is expected that annual user fees for brokers for subsequent years will be due on or about the 3rd of January each year. This is a change from the previous date of on or about the 15th of the year.

Dated: October 18, 1994.

George J. Weise,

Commissioner of Customs.

[FR Doc. 94–26199 Filed 10–20–94; 8:45 am]

BILLING CODE 4820–02–P

Internal Revenue Service

26 CFR Part 301

[TD 8568]

RIN 1545–AN46

Property Exempt From Levy

AGENCY: Internal Revenue Service (IRS), Treasury.

ACTION: Final regulations.

SUMMARY: This document contains final regulations regarding property exempt from levy. These regulations reflect changes made by the Technical and Miscellaneous Revenue Act of 1988 (TAMRA) and other public laws to section 6334 concerning the determination of property exempt from levy. The regulations affect taxpayers whose wages, salary, or other income are the subject of a levy by the Internal Revenue Service.

DATES: These regulations are effective October 21, 1994.

These regulations apply to levies made on or after July 1, 1989.

FOR FURTHER INFORMATION CONTACT: Jerome D. Sekula, 202–622–3640 (not a toll-free call).

SUPPLEMENTARY INFORMATION:

Background

This document contains final regulations amending the Procedure and Administration Regulations (26 CFR part 301) under section 6334 of the Internal Revenue Code (Code). The regulations reflect the amendment of section 6334 by sections 1015(o) and 6236(c) of the Technical and Miscellaneous Revenue Act of 1988, Public Law. 100–647, as well as the Tax Reform Act of 1986, Public Law 99–514, the Tax Equity and Fiscal Responsibility Act of 1982, Public Law 97–248, and the Tax Reform Act of 1976, Public Law 94–455, which had not previously been reflected in the regulations.

On May 27, 1992, a notice of proposed rulemaking relating to property exempt from levy was published in the **Federal Register** (57 FR 22189). Written comments responding to this notice were received. No public hearing was requested or held. After consideration of all the comments, the proposed regulations under section 6334 are adopted as revised by this Treasury decision.

Explanation of Revisions and Summary of Comments

One commentator suggested that the final regulations provide that *all* retirement plans be exempt from levy, not only those plans enumerated in section 6334 of the Code. This suggestion is not adopted. Congress has specifically provided that certain property is exempt from levy. In fact, section 6334(c) provides that no property is exempt from levy other than property specifically enumerated in the Code.

The proposed regulations provide that where an individual is paid or receives wages, salary, or other income on a one-time basis, the exempt amount is computed as if the taxpayer had been paid for the one-week period ending on the day of payment. One commentator raised questions concerning the application of this "one time basis" rule where an individual was paid on a recurrent, but irregular, basis. Another commentator questioned whether the proposed rule is a correct interpretation of section 6334(d)(3). This commentator argued that under section 6334(d)(3) the exemption amount should be calculated using the total time period over which the wages, salary, or other income was earned.

The proposed regulations have been revised to address the concerns of these commentators. Under the final regulations, when taxpayers are paid on a one-time basis or are paid on a recurrent, but irregular, basis which does not comport with an established calendar period regularly used by the employer or other person being levied upon, taxpayers are entitled to the exempt amount for each week to which the payment received is attributable.

One commentator raised a concern regarding levies that span more than one calendar year where the standard deduction or the amount of the personal exemption changes by operation of law (such as by indexing or otherwise). Under the proposed regulations, the exempt amount remains the same in the second year. The commentator stated that this could cause hardship for employers with automated payroll systems because those employers might have to maintain separate, manual accounts for those employees who had been levied upon in a preceding year. The commentator suggested that employers should be required to calculate and use the new exempt amount when a change in the standard deduction amount or personal exemption amount occurs by operation of law.

While the suggested change might be beneficial to some employers, the Service and Treasury are concerned that it could result in a hardship to other employers (particulary smaller employers) who would be required to reexamine the statement of each employee who files for exemption and recompute a new exempt amount each time a change in the law occurs. In order to accommodate these conflicting concerns, under the final regulations a taxpayer may submit a new verified statement to his or her employer to claim a new exempt amount based on law changes effective in the year in which the claim is filed. This permits a taxpayer to claim an additional exempt amount but avoids burdening businesses with the requirement to reexamine the statement of each employee who files for exemption and automatically recompute a new exempt amount based on law changes alone. However, employers who wish to use the new exempt amount can request that their employees submit new verified statements in order to recompute new exempt amounts based on the changes in the law.

Under the proposed regulations, when payments are made on the basis of a daily pay period, the exempt amount is calculated on the basis of 360 days. The final regulations provide that the exempt amount is calculated on the basis of 260 days, the number of work days in a year (assuming a five day work week and 52 work weeks in a year). This change increases the exempt amount available to a taxpayer who works on a daily pay-period basis. The Service and Treasury believe that this change is consistent with the requirement of section 6334(d)(3) of the Code.

Effective Date

These regulations are effective for levies made on or after July 1, 1989. However, any reasonable attempt to comply with the statutory amendments addressed by these regulations prior to February 21, 1995 will be considered as meeting the requirements of these regulations.

Special Analyses

It has been determined that this Treasury decision is not a significant regulatory action as defined in EO 12866. Therefore, a regulatory assessment is not required. It also has been determined that section 553(b) of the Administrative Procedure Act (5 U.S.C. chapter 5) and the Regulatory Flexibility Act (5 U.S.C. chapter 6) do not apply to these regulations, and therefore, a Regulatory Flexibility Analysis is not required. Pursuant to section 7805(f) of the Code, the notice of proposed rulemaking was submitted to the Small Business Administration for comment on its impact on small business.

Drafting Information

The principal author of these final regulations is Jerome D. Sekula, Office of the Assistant Chief Counsel (General Litigation), IRS. However, personnel from other offices of the Internal Revenue Service and Treasury Department participated in their development.

List of Subjects in 26 CFR Part 301

Employment taxes, Estate taxes, Excise taxes, Gift taxes, Income taxes, Penalties, Reporting and recordkeeping requirements.

Adoption of Amendments to the Regulations

Accordingly, 26 CFR part 301 is amended as follows:

PART 301—[AMENDED]

Paragraph 1. The authority citation for part 301 continues to read in part as follows:

Authority: 26 U.S.C. 7805 * * *

Par. 2. Section 301.6334–1 is amended as follows:

1. In paragraph (a)(2), in the first sentence, "$500" is removed and "$1,650 ($1,550 for levies issued prior to January 1, 1990)" added in its place.

2. In paragraph (a)(3), "$250" is removed and "$1,100 ($1,050 for levies issued prior to January 1, 1990)" added in its place.

3. In paragraph (a)(8), the last sentence is removed.

4. In paragraph (a)(9), "§ 301.6334–6" is removed and "§ 301.6334–4" added in its place.

5. Paragraphs (a)(10) through (a)(13), (d) and (e) are added to read as follows:

§ 301.6334–1 Property exempt from levy.

(a) * * *

(10) *Certain service-connected disability payments.* Any amount payable to an individual as a service-connected (within the meaning of section 101(16) of title 38, United States Code (U.S.C.)) disability benefit under—

(i) Subchapters II (wartime disability compensation), III (wartime death compensation), IV (peacetime disability compensation), V (peacetime death compensation), or VI (general compensation provisions) of chapter 11 of title 38, U.S.C.; or

(ii) Chapters 13 (dependency and indemnity compensation for service commenced deaths), 21 (specially adapted housing for disabled veterans), 23 (burial benefits), 31 (vocational rehabilitation), 32 (post-Vietnam era veterans' educational assistance), 34 (veterans' educational assistance), 35 (survivors' and dependents' educational assistance), 37 (home, condominium, and mobile home loans), or 39 (automobiles and adaptive equipment for certain disabled veterans and members of the armed forces) of title 38, U.S.C.

(11) *Certain public assistance payments.* Any amount payable to an individual as a recipient of public assistance under—

(i) Title IV (relating to aid to families with dependent children) or title XVI (relating to supplemental security income for the aged, blind, and disabled) of the Social Security Act (42 U.S.C. 301 et seq.); or

(ii) State or local government public assistance or public welfare programs for which eligibility is determined by a needs or income test.

(12) *Assistance under Job Training Partnership Act.* Any amount payable to a participant under the Job Training Partnership Act (29 U.S.C. 1501 et. seq.) from funds appropriated pursuant to such Act.

(13) *Principal residence exempt in absence of certain approval or jeopardy.* Except to the extent provided in section 6334(e), the principal residence (within the meaning of section 1034) of the taxpayer whose tax liability is being sought to be collected upon.

* * * * *

(d) *Levy allowed on principal residence.* The principal residence of the taxpayer is not exempt from levy if—

(1) A district director or an assistant district director personally approves, in writing, the levy on such property; or

(2) The district director determines that the collection of tax is in jeopardy.

(e) *Effective date.* These provisions are effective with respect to levies made on or after July 1, 1989. However, any reasonable attempt by a taxpayer to comply with the statutory amendments addressed by these regulations prior to February 21, 1995 will be considered as meeting the requirements of these regulations.

Par. 3. Sections 301.6334–2, 301.6334–3 and 301.6334–4 are revised to read as follows:

§ 301.6334–2 Wages, salary, and other income.

(a) *In general.* Under section 6334 (a)(9) and (d) certain amounts payable to or received by a taxpayer as wages, salary, or other income are exempt from levy. This section describes the income of a taxpayer that is eligible for the exemption from levy (paragraph (b) of this section) and how exempt amounts are to be paid to the taxpayer (paragraph (c) of this section). Section 301.6334–3 describes that sum that will be exempt from levy for each of the taxpayer's pay periods. Pay periods are described in § 301.6334–3. For the amounts exempt from levy, see § 301.6334–3.

(b) *Eligible taxpayer income.* Only wages, salary, or other income payable to the taxpayer after the levy is made on the payor may be exempt from levy under section 6334(a)(9). No amount of wages, salary, or other income that is paid to the taxpayer before levy is made on the payor will be so exempt from levy under section 6334(a)(9). The provisions of this paragraph (b) may be illustrated by the following example:

Example. Delinquent taxpayer A, an individual, is employed by the M Corporation and is paid wages on Friday of each week. Accordingly, A is paid wages on Friday, February 16, 1990. On Saturday, February 17, A deposits these wages into his personal checking account at Bank N. On Tuesday, February 20, a notice of levy is served on the M Corporation and also on Bank N. Amounts payable to A as wages on Friday, February 23, 1990, and any payday thereafter may be exempt from levy under section 6334(a)(9). No amount of wages A deposited in his account at Bank N on February 17, 1990, is exempt from levy under section 6334(a)(9).

(c) *Payment of exempt amounts to taxpayer*—(1) *From wages, salary, or income from other sources where levy on all sources not made.* In the case of a taxpayer who has more than one source of wages, salary, or other income, the district director may elect to levy on only one or more sources while leaving other sources of income free from levy. If the wages, salary, or other income that the district director leaves free from levy equal or exceed the amount to which the taxpayer is entitled as an exemption from levy under section 6334(a)(9), computed in accordance with § 301.6334–3 (and are not otherwise exempt), the district director may treat no amount of the taxpayer's wages, salary, or other income on which the district director elects to levy as exempt from levy. In such a case, the district director must notify the employer or other person upon whom the levy is served that no amount of the taxpayer's wages, salary, or other income is exempt from levy. The employer or other person upon whom the levy is served may rely on such notification in paying over amounts pursuant to the levy. In the absence of such notification from the district director, however, the employer or other person upon whom the levy is served must determine the amount exempt from levy pursuant to § 301.6334–3 as if that employer or other person upon whom the levy is served is the only source of wages, salary, or other income. Amounts not

exempt from levy are to be paid to the district director in accordance with the terms of the levy. The provisions of this paragraph (c)(1) may be illustrated by the following example:

Example. Delinquent taxpayer C is an employee of O Corporation and is paid wages totalling $450 on Friday of each week. C also performs services for P Corporation and is paid a salary of $250 on Friday of each week. On Tuesday, February 20, 1990, a levy is served on O Corporation with respect to the wages payable to C. A levy is not served on P Corporation. C's filing status is single and C is entitled to 1 personal exemption. Under § 301.6334–3, C is entitled to an exemption from levy under 6334(a)(9) totalling $101.92 for each weekly pay period. However, because levy has not been made on C's salary paid by the P Corporation ($250 per week) and that salary exceeds the weekly amount ($101.92) to which C is entitled as exempt from levy, the district director may treat no amount of C's wages paid by the O Corporation as exempt from levy. If the district director requires such treatment, the district director must notify O Corporation that no amount of C's wages is exempt from levy and O Corporation may rely on such notification; in the absence of such notification O Corporation must treat $101.92 as exempt from levy.

(2) *Where sources not levied upon are less than exempt amount.* If the taxpayer's income upon which the district director does not levy is less than the amount to which the taxpayer is entitled as exempt from levy, then an additional amount, determined to be exempt from levy pursuant to § 301.6334–3, may be paid to the taxpayer from the sources of wages, salary, or other income upon which levy has been made. In such a case, the district director must designate those wages, salary, or other income from which the exempt amount is to be paid to the taxpayer, and must notify the employer or other person upon whom the levy is served of the amount of the taxpayer's wages, salary, or other income that is exempt from levy. The employer or other person may rely on such notification in paying over amounts pursuant to the levy. In the absence of such notification from the district director, the employer or other person upon whom the levy is served must determine the amount exempt from levy pursuant to § 301.6334–3 as if that employer or other person upon whom the levy is served is the only source of wages, salary, or other income. Amounts not exempt from levy are to be paid to the district director in accordance with the terms of the levy. The provisions of this paragraph (c)(2) may be illustrated by the following example:

Example. Delinquent taxpayer C is an employee of O Corporation and is paid wages totalling $50 on Friday of each week. C also performs services for P Corporation and is paid a salary of $75 on Friday of each week. On Tuesday, February 20, 1990, a levy is served on P Corporation with respect to the wages and salary of C. C's filing status is single and C is entitled to 1 personal exemption. Under § 301.6334–3, C is entitled to an exemption from levy under section 6334(a)(9) totalling $101.92 for each weekly pay period. The district director may notify P Corporation that only $51.92 of C's wages is exempt from levy and P Corporation may rely on such notification; in the absence of such notification, P Corporation must treat the entire $75 salary as exempt from levy.

(d) *Effective date.* These provisions are effective with respect to levies made on or after July 1, 1989. However, any reasonable attempt by a taxpayer to comply with the statutory amendments addressed by these regulations prior to February 21, 1995 will be considered as meeting the requirements of these regulations.

§ 301.6334–3 Determination of exempt amount.

(a) *Individuals paid on weekly basis.* In the case of any individual who is paid or receives all of his or her wages, salary, and other income on a weekly basis, the amount of wages, salary, and other income payable to or received by him or her during any week that is exempt from levy under section 6334(a)(9) is the exempt amount.

(b) *Term defined.* The term *exempt amount* means an amount equal to—

(1) The sum of—

(i) The standard deduction (including additional standard deductions on account of age or blindness); and

(ii) The aggregate amount of the deductions for personal exemptions allowed the taxpayer under section 151 in the taxable year in which such levy occurs;

(2) Divided by 52.

(c) *Written and properly verified statement.* Unless the taxpayer submits to the employer for forwarding to the district director a written and properly verified statement (as described in § 301.6334–4) specifying the facts necessary to determine the proper amount under paragraphs (b)(1) (i) and (ii) of this section, paragraphs (b)(1) (i) and (ii) of this section must be applied as if the taxpayer were a married individual filing a separate return with only 1 personal exemption.

(d) *Individuals paid on basis other than weekly*—(1) *In general.* In the case of an individual who is paid or receives wages, salary, and other income other than on a weekly basis, the amount payable to that individual during any applicable pay period that is exempt from levy under section 6334(a)(9) is the amount that as nearly as possible will result in the same total exemption from levy for such individual over that period of time other than weekly as that to which the individual would have been entitled under paragraph (b) of this section if, during such period of time, the individual were paid or received such wages, salary, and other income on a regular weekly basis.

(2) *Specific pay periods other than weekly.* In the case of wages, salary, or other income paid to an individual on the basis of an established calendar period regularly used by the employer or other person levied upon for payroll or payment purposes, the exempt amount of wages, salary, and other income payable to or received by an individual during an applicable pay period other than weekly equals—

(i) The sum of—

(A) The standard deduction (including additional standard deductions on account of age or blindness); and

(B) The aggregate amount of the deductions for personal exemptions allowed the taxpayer under section 151 in the taxable year in which such levy occurs;

(ii) Divided by—

(A) 260 in the case of a daily pay period;

(B) 26 in the case of a bi-weekly pay period;

(C) 24 in the case of a semi-monthly pay period; and

(D) 12 in the case of a monthly pay period.

(3) *Nonspecific pay periods.* In the case of wages, salary, or other income paid to an individual on a one-time or a recurrent but irregular basis and which is not paid on the basis of an established calendar period regularly used by the employer or other person levied upon for payroll or payment purposes, the exempt amount of wages, salary, and other income payable to or received by an individual equals the exempt amount defined in paragraph (b) of this section multiplied by the number (but not more than 52) of full weeks (consisting of seven calendar days) to which such payment is attributable. The provisions of this paragraph (d)(3) may be illustrated by the following example:

Example. Taxpayer A's exempt amount per week (as determined under paragraph (b) of this section) is $100. Taxpayer A is hired by Corporation X to perform a specific task for Corporation X at a flat fee of $1,500 which is to be paid at the completion of the task. Taxpayer A completes the task in 10 weeks. The total exempt amount is $1,000 and $500 is subject to levy.

(e) *Levies continuing into following years.* The exempt amount is computed on the basis of the standard deduction (including additional standard deductions on account of age or blindness) for the taxpayer's filing status and the amount of the deduction for a personal exemption in effect in the taxable year in which the original notice of levy is served. Unless the taxpayer submits a new verified statement in accordance with § 301.6334–4, the exempt amount remains the same for pay periods following the pay period in which the notice of levy is served even if there is a change in the taxpayer's factual situation or a change by operation of law (such as by indexing or otherwise) to the standard deduction or personal exemption amounts.

(f) *Effective date.* These provisions are effective with respect to levies made on or after July 1, 1989. However, any reasonable attempt by a taxpayer to comply with the statutory amendments addressed by these regulations prior to February 21, 1995 will be considered as meeting the requirements of these regulations.

§ 301.6334–4 Verified statements.

(a) *In general.* For purposes of §§ 301.6334–2 and 301.6334–3, the amount of wages, salary, or other income that is exempt from levy must be determined on the basis of a written and properly verified statement submitted by the taxpayer to his or her employer for submission to the district director specifying the facts necessary to determine the standard deduction and the aggregate amount of the deductions for personal exemptions allowed the taxpayer under section 151 in the taxable year in which the levy is served. In the absence of submission of such statement, the amount that is exempt from levy must be determined as if the taxpayer were a married individual filing a separate return with only 1 personal exemption.

(b) *Content of statement.* The statement in paragraph (a) of this section must be a written statement signed under penalty of perjury, and dated, containing the following information—

(1) The filing status of the taxpayer as either:

(i) Single;

(ii) Married filing a joint return;

(iii) Married filing a separate return;

(iv) Head of household; or

(v) Qualifying widow or widower with dependent child;

(2) The name, relationship, and Social Security Number of each individual whom the taxpayer can claim as a personal exemption on the taxpayer's income tax return; and

(3) Any additional standard deductions that the taxpayer can claim on account of age (65 or older) or blindness on the taxpayer's income tax return.

(c) *Submission of verified statement*—(1) *Obligation of employer.* An employer upon whom a notice of levy for wages, salary, or other income of a taxpayer is served must promptly notify the taxpayer of the fact that a notice of levy has been served. Unless otherwise indicated on the face of the notice of levy, the employer must request the taxpayer to provide the employer with a written statement signed under penalty of perjury, and dated, containing the information set forth in paragraph (b) of this section, and this statement must be submitted by the employer to the district director. The employer must submit this statement to the district director at the time the employer first responds to the notice of levy.

(2) *Submission by taxpayer.* The taxpayer must provide the employer upon whom the notice of levy has been served with a verified statement complying with paragraph (b) of this section. Unless the taxpayer provides a verified statement, the amount that is exempt from levy must be determined as if the taxpayer were a married individual filing a separate return with only 1 personal exemption.

(3) *Additional statements.* A taxpayer may submit a verified statement to his or her employer at any time. Except as otherwise provided in paragraph (d) of this section, such verified statement will be effective for any payment of wages, salary, or other income made after the date of submission and will replace any previously submitted verified statement. The employer must provide the district director with the statement on the next occasion on which the employer responds to the notice of levy.

(d) *Effect of verified statement*—(1) A verified statement submitted by an employee is effective upon receipt by the employer, and the employer is required to compute the exempt amount on the basis of the information contained in the verified statement unless notified to the contrary by the Internal Revenue Service.

(2) The Internal Revenue Service may find that a verified statement submitted by an employee contains a materially incorrect statement, or it may determine, after written request to the employee for verification of information contained in the verified statement, that it lacks sufficient information to determine whether the verified statement is correct. If the Internal Revenue Service so finds or determines, and notifies the employer in writing that the verified statement is defective, upon receipt of such notice the employer shall consider the verified statement to be defective for purposes of computing the exempt amount.

(3) If the Internal Revenue Service notifies the employer that the verified statement is defective, the Internal Revenue Service will, based upon its finding, advise the employer that the employer is to compute the exempt amount as if no verified statement had been submitted by the employee or will describe upon what basis the exempt amount is to be computed. The Internal Revenue Service will also specify which Internal Revenue Service office to contact for further information.

(4) In addition to any notice furnished to the employer for the employer's use, the Internal Revenue Service will provide the employer with a copy for the employee of each notice it furnishes the employer.

(5) The employer must promptly furnish the employee with a copy of any Internal Revenue Service notice with respect to a verified statement submitted by the employee.

(6) Once paragraph (d)(3) of this section applies, the employer must continue to compute the exempt amount on the basis of the written notice from the Internal Revenue Service until the Internal Revenue Service by written notice advises the employer to compute the exempt amount on the basis of a new verified statement (as described in paragraph (d)(7) of this section) and revokes its earlier written notice.

(7) Once paragraph (d)(3) of this section applies, the employee may submit a new verified statement together with a written explanation of any circumstances of the employee which have changed since the Internal Revenue Service's earlier written notice, or any other circumstances or reasons as justification or support for the claims made by the employee on the new verified statement. The employee may submit the new verified statement and written explanation either—

(i) To the Internal Revenue Service office specified in the notice furnished to the employer under paragraph (d)(3) of this section; or

(ii) To the employer, who must forward the new verified statement and written explanation to the Internal Revenue Service office specified in the notice earlier furnished to the employer on the next occasion on which the employer responds to the notice of levy.

(e) *Effective date.* These provisions are effective with respect to levies made

on or after July 1, 1989. However, any reasonable attempt by a taxpayer to comply with the statutory amendments addressed by these regulations prior to February 21, 1995 will be considered as meeting the requirements of these regulations.

§§ 301.6334–5, 301.6334–6 and 301.6334–7 [Removed]

Par. 4. Sections 301.6334–5 through 301.6334–7 are removed.

Approved: October 4, 1994.

Margaret Milner Richardson,

Commissioner of Internal Revenue.

Leslie Samuels,

Assistant Secretary of the Treasury.

[FR Doc. 94–26073 Filed 10–20–94; 8:45 am]

BILLING CODE 4830–01–U

DEPARTMENT OF THE INTERIOR

Minerals Management Service

30 CFR Parts 250, 256, 280, and 281

RIN 1010–AB63

Archaeological Resource Surveys and Reports on Outer Continental Shelf Lease Tracts

AGENCY: Minerals Management Service, Interior.

ACTION: Final rule.

SUMMARY: This rule amends the regulatory program of the Minerals Management Service (MMS) to state specifically the authority of MMS to require lessees or operators to conduct archaeological resource surveys and submit reports prior to exploration, development and production, or installation of lease term or right-of-way pipelines. This rule also standardizes the definition and use of the term "archaeological resources" within MMS's regulatory program.

EFFECTIVE DATE: November 21, 1994.

FOR FURTHER INFORMATION CONTACT: Kumkum Ray, Engineering and Standards Branch, telephone (703) 787–1600.

SUPPLEMENTARY INFORMATION: Since 1973, the Department of the Interior (DOI) has included a stipulation on the Outer Continental Shelf (OCS) mineral lease tracts to notify potential lessees that, where applicable, archaeological resource surveys and reports will be required. Lessees and operators have, since that time, submitted this information when the stipulation was invoked by MMS.

The authority to require this information was identified, in a general fashion, in a final rule published by MMS in the **Federal Register** on April 1, 1988 (53 FR 10596). That rule granted authority to MMS Regions to ensure safety and environmental protection by requiring OCS lessees and operators to conduct needed surveys and submit reports when seeking approval of their plans to explore or develop and produce hydrocarbons or to install lease term or right-of-way pipelines.

The MMS Regions issue further guidance in the form of Notices to Lessees and Operators (NTL's). These NTL's provide detailed information on archaeological resource requirements.

In order to convert the requirements contained in the archaeological lease stipulation into regulations, a proposed rule was published by MMS on October 12, 1993 (58 FR 52731). The proposed rule sought to grant specific authority to each MMS Regional Director to require archaeological resource surveys and reports. The proposed rule also made minor modifications in 30 CFR parts 256 and 280 to standardize the use of the term "archaeological resource," eliminate use of other terms such as "cultural resources," and provide uniform definitions. The routine requirements for surveys and reports that were proposed in 30 CFR 250.26 are not located in §§ 250.33 and 250.34. These surveys and reports, when required, will normally be included in the exploration report or the development and production report. Since §§ 250.33 and 250.34 pertain to Exploration Plan and Development and Production Plan respectively, the change will help to clarify the requirements.

The comments received during the public comment period were reviewed, and an analysis was conducted within MMS. The following is a discussion of the responses to comments received and any resultant text changes.

Narrative Response to Comments

Authority Citation

Comment: One commenter suggested that we expand the authority section to include other applicable archaeological resource legislation.

Response: The MMS has used the requirements of the National Historic Preservation Act of 1966 (NHPA) 16 U.S.C. 470 et seq., the Archaeological and Historic Preservation Act 16 U.S.C. 469–469c, and the Archaeological Resources Protection Act of 1979 (ARPA) 16 U.S.C. 470aa–mm in developing the requirements in the regulations. However, MMS believes that the Outer Continental Shelf Lands Act provides sufficient authority for all requirements in the regulation.

Changes in Definitions

Comment: Two commenters suggested that we define the term "archaeological resource" to be consistent with the definition provided in implementing regulations for the ARPA, 16 U.S.C. 470aa–mm, 43 CFR 7.3.

Response: We have changed the definition of "archaeological resource" to the wording recommended by the commenters with one exception (with regard to the age criterion), to correspond to the definition provided in 43 CFR 7.3(a) (1) and (2). The exception was to change the 100-year-old criterion for the age of an archaeological resource to a 50-year-old criterion so that the MMS regulation is consistent with the NHPA criteria for eligibility to the National Register of Historic Places. To improve the clarity of the rule, MMS added a definition of significant archaeological resource.

Archaeological Report Standards

Comment: One commenter suggested that we include documentation (report) standards in the archaeology rule. Another commenter suggested that the reports submitted conform to the "Secretary of the Interior's Standards and Guidelines for Archaeology and Historic Preservation."

Response: The MMS has developed detailed survey and report standards for OCS archaeological surveys based on more than 20 years experience. These standards are contained in Region-specific NTL's. The MMS has chosen not to include the survey and report standards in the rule. These standards are very detailed and vary from region to region due to differences in regional geology and environmental conditions.

Basis for Requiring Archaeological Report

Comment: One commenter was concerned that in the proposed rule, the Regional Director would be permitted to make the determination of whether an archaeological survey/report would be required. Another commenter suggested that we provide improved guidance about the basis upon which a Regional Director would make the regulatory determination that an archaeological resource exists in the proposed lease area.

Response: This decision as to whether or not a report is required is not made arbitrarily by the Regional Director. The MMS conducts regional archaeological baseline studies to compile information on the locations of historic shipwrecks and coastal prehistoric archaeological sites. These data are also used to construct predictive criteria for the

occurrence of unknown sites on the continental shelf.

Using these predictive criteria, MMS can identify portions of the continental shelf having potential for archaeological resources. These "archaeologically sensitive" areas are used as the basis for requiring marine remote sensing surveys to evaluate the archaeological site potential of individual lease tracts before permitting lease activities.

Information Submitted With the Archaeological Report

Comment: One commenter suggested that a new § 250.26(c) be added to require that the reports submitted to the Regional Director include all the data, artifacts, records, and remains obtained during the investigations conducted pursuant to 256.26 (a) and (b), pertaining to reporting requirements for the protection of possible or discovered archaeological resources.

Response: The marine remote sensing survey data collected to evaluate archaeological resources is maintained by the lessee or right-of-way holder; however, the data must be made available to MMS upon request. The MMS maintains copies of the archaeological reports prepared from the remote sensing survey data. Because the archaeological surveys conducted prior to OCS activities are reconnaissance surveys, evidence of potential resources is used to avoid lessee activity that could harm or disturb artifacts or remains. Thus, artifacts or remains are rarely recovered or disturbed.

Archaeological Surveys and Grandfathered Leases

Comment: One commenter suggested that MMS should continue its practice of requiring no archaeological surveys for grandfathered leases. (The commenter's view is that a grandfathered lease is any lease issued by MMS prior to December 1973, the date the first lease with an archaeological resource stipulation was issued). The commenter also indicated that existing survey data on older leases should continue to be acceptable to MMS for exploration and most development activities for as long as the lease remains in force. The commenter believes that although the aforementioned practices are not specifically addressed or confirmed in the proposed regulations, it is implicit in the provisions thereof that MMS does not intend for the proposed changes to the regulations to change these existing procedures. It is the commenter's position that to do otherwise would directly impair existing lease contract rights.

Response: The MMS does not agree that any lease issued prior to the inclusion of an archaeological resource lease stipulation in December 1973 is grandfathered and exempt from the requirement to protect and preserve resources under either the existing or proposed regulations. The archaeological stipulations included in OCS leases in December 1973 were designed to ensure that lessees and other interested parties were aware of the need to protect and preserve archaeological resources. The absence of an archaeological stipulation in an OCS lease issued prior to December 1973 does not free the lessee of its obligation to protect and preserve resources. In accordance to § 250.33(b)(15) or § 250.34(b)(8)(v)(A), if the Regional Director notifies the lessee that an archaeological resource may exist in the lease area, prior to commencing any operations, the lessee is required to prepare a report as specified by the Regional Director to determine the potential existence of any archaeological resource that may be affected by operations. Thus, the regulations are applicable to any new exploration or development operations except preliminary activities (250.31). If there are no new activities, production operations will continue with no changes in the status quo.

Chance Find Clause

Comment: One commenter recommended that treatment of unanticipated discoveries of archaeological resources during operations be made consistent with DOI procedures by requiring a halt to operations until the Regional Director has told the lessee how to protect the resource. Other commenters suggested that this clause, commonly called the "chance finds clause," be changed to reflect the fact that not all discoveries made during operations will require protection.

Response: In response to these comments, wording changes were made to clarify that not all discoveries made during operations, including operations conducted within a right-of-way, would require protection. To provide consistency between sections, the wording of §§ 250.26(b) and 250.159(c)(4) has been changed.

Author

This document was prepared by Kumkum Ray, Engineering and Technology Division, MMS and Melanie Stright, Environmental Policy and Programs Division, MMS.

Executive Order (E.O.) 12866

This final rule was reviewed under E.O. 12866. The final rule was determined to not be a significant rule under the criteria of E.O. 12866.

Regulatory Flexibility Act

The DOI has determined that this rule will not have a significant effect on a substantial number of small entities. In general, the entities that engage in offshore activities are not considered small due to the technical and financial resources and experience necessary to safely conduct such activities.

Paperwork Reduction Act

The collections of information contained in §§ 250.26, 250.33 and 250.34 have been approved by the Office of Management and Budget (OMB) under 44 U.S.C. 3501 et seq., and assigned clearance number 1010–0049. The information will be used to protect archaeological resources. Response is mandatory in accordance with Sec. 204, Public Law 95–372, 92 Stat. 629 (43 U.S.C. 1334).

Public reporting burden for this collection of information is estimated to average 1 hour per response, including the time for reviewing instructions, searching existing data sources, gathering and maintaining the data needed, and completing and reviewing the collection of information. Send comments regarding this burden estimate or any other aspect of this collection of information, including suggestions for reducing the burden, to the Information Collection Clearance Officer; Minerals Management Service; Mail Stop 2053, 381 Elden Street; Herndon, Virginia 22070–4817, and the Office of Management and Budget; Paperwork Reduction Project (1010–0049); Washington, DC 20503, telephone (202) 395–7340.

Takings Implication Assessment

The DOI has determined that the rule does not represent a governmental action capable of interference with constitutionally protected property rights. Thus, a Takings Implication Assessment has not been prepared pursuant to E.O. 12630, Government Action and Interference with Constitutionally Protected Property Rights.

E.O. 12778

The DOI has certified to OMB that this final rule meets the applicable civil justice reform standards provided in sections 2(a) and 2(b)(2) of E.O. 12778.

National Environmental Policy Act

The DOI has determined that this action does not constitute a major Federal action affecting the quality of the human environment; therefore,

preparation of an Environmental Impact Statement is not required.

List of Subjects

30 CFR Part 250

Continental shelf, Environmental impact statements, Environmental protection, Government contracts, Incorporation by reference, Investigations, Mineral royalties, Oil and gas development and production, Oil and gas exploration, Oil and gas reserves, Penalties, Pipelines, Public lands—mineral resources, Public lands—rights-of-way, Reporting and recordkeeping requirements, Sulphur development and production, Sulphur exploration, Surety bonds.

30 CFR Part 256

Administrative practice and procedure, Continental shelf, Government contracts, Oil and gas exploration, Public lands—mineral resources, Reporting and recordkeeping requirements, Surety bonds.

30 CFR Part 280

Administrative practice and procedure, Bonds, Continental shelf, Environmental protection, Mines, Public lands—mineral resources, Reporting and recordkeeping requirements.

30 CFR Part 281

Administrative practice and procedure, Bonds, Continental shelf, Mineral royalties, Mines, Public lands—mineral resources, Reporting and recordkeeping requirements.

Dated: September 9, 1994.

Bob Armstrong,

Assistant Secretary, Land and Minerals Management.

For the reasons set out in the preamble, 30 CFR parts 250, 256, 280, and 281 are amended as follows:

PART 250—OIL AND GAS AND SULPHUR OPERATIONS IN THE OUTER CONTINENTAL SHELF

1. The authority citation for part 250 is revised to read as follows:

Authority: 43 U.S.C. 1334.

2. Section 250.2 is amended by adding the following definitions, in alphabetical order, to read as follows:

§ 250.2 Definitions.

* * * * *

Archaeological resource means any material remains of human life or activities that are at least 50 years of age and that are of archaeological interest.

* * * * *

Material remains means physical evidence of human habitation, occupation, use, or activity, including the site, location, or context in which such evidence is situated.

* * * * *

Of archaeological interest means capable of providing scientific or humanistic understanding of past human behavior, cultural adaptation, and related topics through the application of scientific or scholarly techniques, such as controlled observation, contextual measurement, controlled collection, analysis, interpretation, and explanation.

* * * * *

Significant archaeological resource means those archaeological resources that meet the criteria of significance for eligibility to the National Register of Historic Places as defined in 36 CFR 60.4.

* * * * *

3. A new § 250.26 is added to subpart A to read as follows:

§ 250.26 Archaeological reports and surveys.

(a) If the Regional Director believes that an archaeological resource may exist in the lease area, the Regional Director will notify the lessee in writing. The lessee shall include an archaeological report in the Exploration Plan or Development and Production Plan and shall comply with the following:

(1) If the evidence suggests that an archaeological resource may be present, the lessee shall either:

(i) Locate the site of any operation so as not to affect adversely the area where the archaeological resource may be; or

(ii) Establish to the satisfaction of the Regional Director that an archaeological resource does not exist or will not be adversely affected by operations. This shall be done by further archaeological investigation, conducted by an archaeologist and a geophysicist, using survey equipment and techniques deemed necessary by the Regional Director. A report on the investigation shall be submitted to the Regional Director for review.

(2) If the Regional Director determines that an archaeological resource is likely to be present in the lease area and may be adversely affected by operations, the Regional Director will notify the lessee immediately. The lessee shall take no action that may adversely affect the archaeological resource until the Regional Director has told the lessee how to protect it.

(b) If the lessee discovers any archaeological resource while conducting operations in the lease area, the lessee shall immediately halt operations within the area of the discovery and report the discovery to the Regional Director. If investigations determine that the resource is significant, the Regional Director will inform the lessee how to protect it.

4. Section 250.33 is amended by revising paragraphs (b)(15) and (o) to read as follows:

§ 250.33 Exploration Plan.

* * * * *

(b) * * *

(15) If the Regional Director believes that an archaeological resource may exist in the lease area, the Regional Director will notify the lessee in writing. Prior to commencing any operations, the lessee shall prepare a report, as specified by the Regional Director, to determine the potential existence of any archaeological resource that may be affected by operations. The report shall be prepared by an archaeologist and geophysicist and shall be based on an assessment of data from remote-sensing surveys and of other pertinent archaeological and environmental information.

* * * * *

(o) To ensure safety and protection of the environment and archaeological resources, the Regional Director may authorize or direct the lessee to conduct geological, geophysical, biological, archaeological, or other surveys or monitoring programs. The lessee shall provide the Regional Director, upon request, with copies of any data obtained as a result of those surveys and monitoring programs.

* * * * *

5. Section 250.34 is amended by revising paragraphs (b)(8)(v)(A) and (s) to read as follows:

§ 250.34 Development and Production Plan.

* * * * *

(b) * * *

(8) * * *

(v) * * *

(A) If the Regional Director believes that an archaeological resource may exist in the lease area, the Regional Director will notify the lessee in writing. Prior to commencing any operations, the lessee shall prepare a report, as specified by the Regional Director, to determine the potential existence of any archaeological resource that may be affected by operations. The report shall be prepared by an archaeologist and geophysicist and shall be based on an assessment of data from remote-sensing surveys and of other pertinent

archaeological and environmental information.

* * * * *

(s) To ensure safety and protection of the environment and archaeological resources, the Regional Director may authorize or direct the lessee to conduct geological, geophysical, biological, archaeological, or other surveys or monitoring programs. The lessee shall provide the Regional Director, upon request, copies of any data obtained as a result of those surveys and monitoring programs.

* * * * *

6. Section 250.157 is amended by revising paragraph (a)(5) to read as follows:

§ 250.157 Applications.

(a) * * *

(5) The application shall include a shallow hazards survey report and, if required by the Regional Director, an archaeological resource report that covers the entire length of the pipeline. A shallow hazards analysis may be included in a lease term pipeline application in lieu of the shallow hazards survey report with the approval of the Regional Director. The Regional Director may require the submission of the data upon which the report or analysis is based.

* * * * *

7. Section 250.159 is amended by revising paragraph (c)(4) to read as follows:

§ 250.159 General requirements for a pipeline right-of-way grant.

* * * * *

(c) * * *

(4) If the right-of-way holder discovers any archaeological resource while conducting operations within the right-of-way, the right-of-way holder shall immediately halt operations within the area of the discovery and report the discovery to the Regional Director. If investigations determine that the resource is significant, the Regional Director will inform the lessee how to protect it.

* * * * *

PART 256—OUTER CONTINENTAL SHELF MINERALS AND RIGHTS-OF-WAY MANAGEMENT, GENERAL

9. The authority citation for part 256 is revised to read as follows:

Authority: 43 U.S.C. 1331 *et seq.*

9. Section 256.23 is amended by revising the last sentence in paragraph (b) to read as follows:

§ 256.23 Information on areas.

* * * * *

(b) * * * For an oil and gas lease sale Call Area, the Director may request comments concerning geological conditions, including bottom hazards; archaeological sites on the seabed or nearshore; multiple uses of the proposed leasing area, including navigation, recreation, and fisheries; and other socioeconomic, biological, and environmental information.

PART 280—PROSPECTING FOR MINERALS OTHER THAN OIL, GAS, AND SULPHUR IN THE OUTER CONTINENTAL SHELF

10. The authority citation for part 280 is revised to read as follows:

Authority: 43 U.S.C. 1331 et seq., 42 U.S.C. 4332 *et seq.*

11. Section 280.2 is amended by revising the definition of "archaeological resource" and adding the following definitions in alphabetical order, to read as follows:

§ 280.2 Definitions.

* * * * *

Archaeological resource means any material remains of human life or activities that are at least 50 years of age and that are of archaeological interest.

* * * * *

Material remains means physical evidence of human habitation, occupation, use, or activity, including the site, location, or context in which such evidence is situated.

* * * * *

Of archaeological interest means capable of providing scientific or humanistic understanding of past human behavior, cultural adaptation, and related topics through the application of scientific or scholarly techniques, such as controlled observation, contextual measurements, controlled collection, analysis, interpretation, and explanation.

* * * * *

Significant archaeological resource means those archaeological resources that meet the criteria of significance for eligibility to the National Register of Historic Places as defined in 36 CFR 60.4.

* * * * *

PART 281—LEASING OF MINERALS OTHER THAN OIL, GAS, AND SULPHUR IN THE OUTER CONTINENTAL SHELF

12. The authority citation for part 281 is revised to read as follows:

Authority: 43 U.S.C. 1331 *et seq.*

§ 281.12 [Amended]

13. In § 281.12, paragraph (c) is amended by removing the word "archeological" and adding in its place the word "archaeological".

[FR Doc. 94–26002 Filed 10–20–94; 8:45 am]

BILLING CODE 4310–MR–M

Office of Surface Mining Reclamation and Enforcement

30 CFR Part 950

Wyoming Permanent Regulatory Program

AGENCY: Office of Surface Mining Reclamation and Enforcement (OSM), Interior.

ACTION: Final rule; approval of amendments and removal of condition of program approval.

SUMMARY: The Secretary of the Interior is announcing the approval of a proposed amendment to the Wyoming permanent regulatory program (hereinafter, the "Wyoming program") under the Surface Mining Control and Reclamation Act of 1977 (SMCRA or the Act), and the removal of the remaining condition of program approval. The amendment addresses the recovery of costs and expenses, including attorney's fees, incurred in connection with administrative and judicial review proceedings under the Wyoming program. The amendment is intended to revise the Wyoming program to be consistent with the corresponding Federal standards and to clarify State operating procedures.

EFFECTIVE DATE: October 21, 1994.

FOR FURTHER INFORMATION CONTACT: Guy V. Padgett, (307) 261–5776.

SUPPLEMENTARY INFORMATION:

I. Background on the Wyoming Program

On November 26, 1980, the Secretary of the Interior conditionally approved the Wyoming program. General background information on the Wyoming program, including the Secretary's findings, the disposition of comments, and conditions of approval of the Wyoming program can be found in the November 26, 1980, **Federal Register** (45 FR 78637). Subsequent actions concerning Wyoming's program and program amendments can be found at 30 CFR 950.11, 950.12, 950.15, and 950.16.

On January 24, 1994, the Secretary of the Interior approved, with certain exceptions, amendments to the Wyoming program provisions regarding

the recovery of costs and expenses, including attorney's fees, incurred in connection with administrative review proceedings under the Wyoming program. As a result of this decision, the condition of program approval at 30 CFR 950.11(c) was modified to require Wyoming to revise section 35–11–437 of the Wyoming Statutes (W.S.) to be consistent with the Federal requirements at section 525(e) of SMCRA (30 U.S.C. 1275(e)) and 43 CFR 4.1290 through 4.1295 concerning the award of costs and expenses incurred in connection with administrative and judicial proceedings (see 59 FR 3513). The amendment under consideration in the current rulemaking is intended to satisfy this condition.

II. Submission of Amendment

By letter dated April 13, 1994 (Administrative Record No. WY–27–01), Wyoming submitted Enrolled Act No. 4, which was adopted during the 1994 Budget Session of the Wyoming Legislature and signed into law by the Governor on March 16, 1994, as a proposed amendment to its permanent program. The proposed amendment, which consists of statutory changes to the Wyoming Environmental Quality Act (EQA), is intended to satisfy the condition of program approval at 30 CFR 950.11(c), as modified on January 24, 1994 (59 FR 3513). Enrolled Act No. 4 revises W.S. 35–11–437 by (1) amending the introductory language of subsection (f) to change the word "director" to "council," and add the phrase "or subsequent judicial review proceedings"; (2) repealing paragraphs (f)(i) and (f)(iii) in their entirety; and (3) repealing subsection (g) in its entirety.

OSM announced receipt of the April 13, 1994, submittal in the May 2, 1994, **Federal Register** (59 FR 22571), and, in the same document, opened the public comment period and provided opportunity for a public hearing on the substantive adequacy of the April 13, 1994, submittal. The public comment period closed on June 1, 1994. A public hearing was not held because no one requested an opportunity to testify.

III. Secretary's Findings

Set forth below, pursuant to SMCRA and the Federal regulations at 30 CFR 732.15 and 732.17, are the Secretary's findings concerning the proposed amendment submitted by Wyoming on April 13, 1994.

1. Award of Costs and Expenses: Applicability to Judicial Proceedings and Administrative Proceedings under EQA Sections Other than W.S. 35–11–437

Wyoming Enrolled Act No. 4 revises W.S. 35–11–437(f), the State counterpart to section 525(e) of SMCRA, by providing in part that costs and expenses (including attorney's fees) incurred by parties in connection with a proceeding under the EQA may be assessed against one or more of those parties only if the proceeding is a contested case proceeding or subsequent judicial review proceeding. In relevant part, the revised statute reads as follows:

> At the request of any person, a sum equal to the aggregate amount of all costs and expenses (including attorney's fees) as determined by the council to have been reasonably incurred by the person for or in connection with his participation in the proceeding, including any judicial review of agency actions, may be assessed against either party as the court or the council deems proper. This subsection shall apply only to contested case proceedings or subsequent judicial review proceedings under the provisions of this act relating to the regulation of surface coal mining and reclamation operations in accordance with P.L. 95–87, as the law is worded on August 3, 1977.

In the decision announced in the January 24, 1994, **Federal Register**, the Secretary did not approve the introductory clause of the first sentence of W.S. 35–11–437(f) ("Whenever an order is issued under this section,"), the words "only" and "administrative" in the second sentence of this subsection ("This subsection shall apply only to administrative contested case proceedings * * *"), and paragraph (i) of this subsection ("The issues resolved in the contested proceeding are those in the original complaint that were raised within the statutory time frames under W.S. 35–11–406(p) or within an enforcement action"). In concert with this action, the Secretary modified the condition of program approval at 30 CFR 950.11(c) by adding paragraphs (1) and (2) to require Wyoming to clearly authorize the award of costs and expenses incurred in connection with participation in (1) judicial review proceedings concerning agency actions, and (2) with respect to awards from the State, any administrative contested case proceedings under the approved program, not just proceedings concerning enforcement actions under W.S. 35–11–437 or actions taken under W.S. 35–11–406(p). (See findings 3 and 6, 59 FR 3915–17, January 24, 1994.)

The current submittal repeals paragraph (f)(i) and the disapproved introductory clause discussed above and modifies the remainder of W.S. 35–11–437(f) to clarify that this subsection applies to contested case proceedings and subsequent judicial review proceedings under any SMCRA-related provisions of the EQA, not just enforcement actions under W.S. 35–11–437 or proceedings pursuant to W.S. 35–11–406(p). Therefore, the Secretary finds that the State has satisfied the requirements of 30 CFR 950.11(c) (1) and (2). Accordingly, he is approving the proposed amendment and removing 30 CFR 950.11(c) (1) and (2).

2. Award of Costs and Expenses: Eligible Issues [W.S. 35–11–437(f)(i)]

Wyoming Enrolled Act No. 4 revises W.S. 35–11–437(f) by repealing paragraph (i), which provided a participant in a proceeding is eligible to receive an award of costs and expenses from the State only if the issues resolved in the contested proceeding were raised in the original complaint and within the statutory timeframes of W.S. 35–11–406(p) or within an enforcement action.

As discussed in finding 3 of the January 24, 1994, **Federal Register** document (59 FR 3515–16), the Secretary did not approve the now-repealed provision because he found it to be inconsistent with section 525(e) of SMCRA and 43 CFR 4.1290 through 4.1295. In addition, the Secretary modified the condition of program approval at 30 CFR 950.11(c) by adding a paragraph (3), which, in part, required that Wyoming revise its statute to remove the provision limiting awards to expenses incurred in connection with proceedings involving issues raised in the original complaint.

The Secretary finds that Wyoming's repeal of W.S. 35–11–437(f)(i) satisfies the portion of 30 CFR 950.11(c)(3) discussed above. Therefore, he is approving the proposed amendment and removing the pertinent portion of the program condition.

3. Award of Costs and Expenses: Cap on Fees and Costs [W.S. 35–11–437(g)]

Wyoming Enrolled Act No. 4 revises W.S. 35–11–437 by repealing subsection (g), which provided that attorney's fees, expert witness fees or other fees or costs shall not exceed $50.00 per hour.

As discussed in finding 7 of the January 24, 1994, **Federal Register** document (59 FR 3517), the Secretary did not approve the now-repealed provision because he found it to be inconsistent with section 525(e) of SMCRA. In addition, he modified the condition of program approval at 30 CFR 950.11(c) by adding a paragraph (3), which, in part, required that

Wyoming revise its statute to authorize the award of all reasonably incurred costs and expenses without placing any inflexible limits on the meaning of "reasonably incurred."

The Secretary finds that Wyoming's repeal of W.S. 35–11–437(g) and its hourly rate cap satisfies the portion of 30 CFR 950.11(c)(3) discussed above. Therefore, he is approving the proposed amendment and removing the pertinent portion of the program condition.

4. Award of Costs and Expenses: General [W.S. 35–11–437(f)]

Wyoming Enrolled Act No. 4 revises W.S. 35–11–437(f) by replacing the term "director" in the phrases "as determined by the director" and "as the court or director deems proper" with the term "council."

As discussed in finding 1 of the January 24, 1994, **Federal Register** document (59 FR 3514), the Secretary did not approve W.S. 35–11–437(f) to the extent that it referred to "the Director" rather than "the Council" (the State's administrative review entity) because he found it to be inconsistent with 43 CFR 4.1291. In addition, he modified the condition of program approval at 30 CFR 950.11(c) by adding a paragraph (4), which required that Wyoming revise its statute to clarify that, with respect to administrative review proceedings, petitions for awards of costs and expenses must be filed with and reviewed and decided by the Environmental Quality Council, not the Director of the Department of Environmental Quality.

The Secretary finds that Wyoming's revisions to W.S. 35–11–437(f) satisfy the requirements of 30 CFR 950.11(c)(4). Therefore, he is approving the proposed amendment and removing the pertinent portion of the condition of program approval.

5. Award of Costs and Expenses: Requirement for Establishment of Existence of Violation [W.S. 35–11–437(f)(iii)]

Wyoming Enrolled Act No. 4 repeals W.S. 35–11–437(f)(iii), which allowed the award of costs and expenses from the State only if the person claiming eligibility for such an award establishes the existence of a specific violation of an applicable statute or rule.

As discussed in finding 5 of the January 24, 1994, **Federal Register** decision document (59 FR 3516), the Secretary did not approve W.S. 35–11–437(f)(iii) because he found it to be inconsistent with section 525(e) of SMCRA and the Federal regulations at 43 CFR 4.1294(b). In addition, he modified the condition of program approval at 30 CFR 950.11(c) by adding a paragraph (5), which required that Wyoming revise its statute to eliminate the requirement that the person establish the existence of a specific violation of applicable statute or rule as a prerequisite for awards from the State.

The Secretary finds that Wyoming's repeal of W.S. 35–11–437(f)(iii) satisfies the requirements of 30 CFR 950.11(c)(5). Therefore, he is approving the proposed amendment and removing the pertinent portion of the condition of program approval.

IV. Summary and Disposition of Comments

Public Comments

OSM announced receipt of the April 13, 1994, submittal in the May 2, 1994, **Federal Register** (59 FR 22571), and, in the same document, opened the public comment period and provided opportunity for a public hearing on the substantive adequacy of the April 13, 1994, submittal. The public comment period closed on June 1, 1994. A public hearing was not held because no one requested an opportunity to testify.

Written comments were received from the Powder River Basin Resource Council (PRBRC) (Administrative Record No. WY–27–12). A summary of these comments and their disposition is set forth below:

1. PRBRC expressed concern that the wording of the phrase "may be assessed against either party as the court or the council deems proper" in W.S. 35–11–437(f) is too broad. The commenter stated that it should be limited by adding the clause "in conformity with 43 CFR 4.1290 through 4.1295." In addition, PRBRC stated that the phrase "and shall include all classes of actions in which participants would be eligible for an award of costs and expenses under 43 CFR 4.1290 through 4.1295" should be inserted after "in accordance with P.L. 95–87" in W.S. 35–11–437(f) to clarify the classes of actions in connection with which participants would be eligible for awards of costs and expenses.

The Secretary does not agree that the suggested additional language is either necessary or proper. The statutory language adopted by Wyoming is substantively identical to and therefore consistent with section 525(e) of SMCRA, which also contains an unmodified "deems proper" standard. Furthermore, the Wyoming Department of Environmental Quality's Rules of Practice and Procedures contain counterparts to 43 CFR 4.1290 through 4.1295. On January 24, 1994, OSM approved these Wyoming Rules as being consistent with the Federal rules cited by the commenter (see 59 3515). Therefore, no further statutory revisions are needed.

2. PRBRC opposes deletion of the word "administrative" in the phrase "shall apply only to administrative contested case proceedings" in W.S. 35–11–437(f). The commenter argues that the term "contested case" should be deleted instead.

The Secretary does not agree. As discussed in finding 2 of the January 24, 1994, decision document (59 FR 3515), the Secretary found use of the term "contested case" to be consistent with section 525(e) of SMCRA and its implementing regulations, as interpreted by case law. Deletion of the adjective "administrative" merely eliminates a redundancy since Wyoming's Administrative Procedure Act, at W.S. 16–3–101(b)(ii), effectively defines "contested case" as an administrative proceeding other than rulemaking. Finally, the January 24, 1994, decision document states that the Secretary's approval is predicated upon Wyoming's interpretation of the term contested case as including all classes of actions in which participants would be eligible for an award of costs and expenses under 43 CFR 4.1290 through 4.1295. Therefore, there is no need to make the changes sought by the commenter.

3. PRBRC expressed concern that the clause "as the law is worded on August 3, 1977", which modifies the phrase "in accordance with P.L. 95–87" in W.S. 35–11–437(f), may cause the State law to become less stringent than SMCRA as the Act evolves. The Secretary finds that this concern is misplaced. Under 30 CFR 732.17(d), the Director of OSM must promptly notify the State of any changes in SMCRA that will require an amendment to the State program.

4. PRBRC objected to the provision in W.S. 35–11–437(f) which specifies that a person who did not initiate a proceeding may receive an award of costs and expenses from the State only if that person's contribution is separate and distinct from the contribution made by the person initiating the proceeding. The commenter stated that this provision could cause confusion and could be interpreted as being additive to the requirement that the person make a substantial contribution to a full and fair determination of the issues. As discussed in finding 4 of the January 24, 1994, decision document, the Secretary previously approved this provision, noting that the "separate and distinct" requirement is an implicit component of the "substantial contribution" requirement, and is not inconsistent

with section 525(e) of SMCRA or its implementing regulations (see 59 FR 3516).

Federal Agency Comments

Pursuant to section 503(b) of SMCRA and its implementing regulations at 30 CFR 732.17(h)(11)(i), comments were solicited from various Federal agencies with an actual or potential interest in the Wyoming program. None of these agencies provided any objection to approval of the submittal.

State Historic Preservation Office (SHPO) and Advisory Council on Historic Preservation (ACHP) Comments

As required by 30 CFR 732.17(h)(4), OSM provided the submittal to the SHPO and ACHP for comment. No comments were received.

Environmental Protection Agency Concurrence

Under 30 CFR 732.17(h)(11)(ii), OSM must obtain the written concurrence of the Administrator of the U.S. Environmental Protection Agency (EPA) before approving any provisions of a proposed State program amendment that relate to air or water quality standards promulgated under the authority of the Clean Water Act (33 U.S.C. 1251 *et seq.*) or the Clean Air Act (42 U.S.C. 7401 *et seq.*). None of the provisions of this proposed amendment relate to air or water quality standards. Hence, no concurrence is needed.

V. Secretary's Decision

Based on the above findings, the Secretary is approving Wyoming's proposed program amendment as submitted on April 13, 1994. Because this amendment fully satisfies the requirements of the condition of program approval at 30 CFR 950.11(c), he is also removing this condition.

The Federal regulations at 30 CFR part 950 codifying decisions concerning the Wyoming program are being amended to implement this decision. This final rule is being made effective immediately to expedite the State program amendment process and to encourage States to bring their programs into conformity with the Federal standards without undue delay. Consistency of State and Federal standards is required by SMCRA.

VI. Procedural Determinations

Compliance with Executive Order 12866

This final rule is exempt from review by the Office of Management and Budget under Executive Order 12866 (Regulatory Planning and Review).

Compliance with Executive Order 12778

The Department of the Interior has conducted the reviews required by section 2 of Executive Order 12778 (Civil Justice Reform) and has determined that this rule meets the applicable standards of subsections (a) and (b) of that section. However, these standards are not applicable to the actual language of State regulatory programs and program amendments since each such program is drafted and promulgated by a specific State, not by OSM. Under sections 503 and 505 of SMCRA (30 U.S.C. 1253 and 12550) and the Federal regulations at 30 CFR 730.11, 732.15, and 732.17(h)(10), decisions on proposed State regulatory programs and program amendments submitted by the States must be based solely on a determination of whether the submittal is consistent with SMCRA and its implementing Federal regulations and whether the requirements of 30 CFR Parts 730, 731, and 732 have been met.

Compliance with the National Environmental Policy Act

No environmental impact statement is required for this rule since section 702(d) of SMCRA (30 U.S.C. 1292(d)) provides that agency decisions on proposed State regulatory program provisions do not constitute major Federal actions within the meaning of section 102(2)(C) of the National Environmental Policy Act of 1969 (42 U.S.C. 4332(2)(C)).

Paperwork Reduction Act

This rule does not contain information collection requirements that require approval by the Office of Management and Budget under the Paperwork Reduction Act (44 U.S.C. 3507 *et seq.*).

Compliance With the Regulatory Flexibility Act

The Department of the Interior has determined that this rule will not have a significant economic impact on a substantial number of small entities under the Regulatory Flexibility Act (5 U.S.C. 601 *et seq.*). The State submittal which is the subject of this rule is based upon counterpart Federal regulations for which an economic analysis was prepared and certification made that such regulations would not have a significant economic effect upon a substantial number of small entities. Hence, this rule will ensure that existing requirements previously promulgated by OSM will be implemented by the State. In making the determination as to whether this rule would have a significant economic impact, the Department relied upon the data and assumptions for the counterpart Federal regulations.

List of Subjects in 30 CFR Part 950

Intergovernmental relations, Surface mining, Underground mining.

Dated: October 14, 1994.

Bob Armstrong,

Assistant Secretary, Land and Minerals Management.

For the reasons set out in the preamble, title 30, chapter VII, subchapter T, part 950 of the Code of Federal Regulations is amended as set forth below.

PART 950—WYOMING

1. The authority citation for part 950 continues to read as follows:

Authority: 30 U.S.C. 1201 *et seq.*

§ 950.11 [Removed]

2. Section 950.11 is removed.

3. Section 950.15 is amended by adding paragraph (u) to read as follows:

§ 950.15 Approval of regulatory program amendments.

* * * * *

(u) The following amendment, as submitted on April 13, 1994, is approved effective on October 21, 1994: Wyoming Enrolled Act No. 4 (1994 Budget Session), which concerns the award of costs and expenses incurred in connection with administrative and judicial review proceedings. The Act contains revisions to section 35–11–437(f) of the Wyoming Statutes and repeals section 35–11–437(g).

[FR Doc. 94–26152 Filed 10–20–94; 8:45 am]

BILLING CODE 4310–05–M

DEPARTMENT OF DEFENSE

Department of the Navy

32 CFR Part 706

Certifications and Exemptions Under the International Regulations for Preventing Collisions at Sea, 1972; Amendment

AGENCY: Department of the Navy, DOD.

ACTION: Final rule.

SUMMARY: The Department of the Navy is amending its certifications and exemptions under the International Regulations for Preventing Collisions at Sea, 1972 (72 COLREGS), to reflect that the Judge Advocate General of the Navy has determined Large Harbor Tugs YTB 780 and YTB 789 are vessels of the Navy which, due to their special construction and purpose, cannot comply fully with

certain provisions of the 72 COLREGS without interfering with their special functions as Large Harbor Tugs. The intended effect of this rule is to warn mariners in waters where 72 COLREGS apply.

EFFECTIVE DATE: August 9, 1994.

FOR FURTHER INFORMATION CONTACT: Commander K.P. McMahon, JAGC, U.S. Navy Admiralty Counsel, Office of the Judge Advocate General Navy Department, 200 Stovall Street, Alexandria, VA 22332–2400, Telephone number: (703) 325–9744.

SUPPLEMENTARY INFORMATION: Pursuant to the authority granted in 33 U.S.C. 1605, the Department of the Navy amends 32 CFR part 706. This amendment provides notice that the Judge Advocate General of the Navy, under authority delegated by the Secretary of the Navy, has certified that Large Harbor Tugs YTB 780 and YTB 789 are vessels of the Navy which, due to their special construction and purpose, cannot comply fully with 72 COLREGS: Rule 21(c), pertaining to the location and arc of visibility of the sternlight; Rule 24(c), pertaining to the towing lights displayed by power driven vessels when pushing ahead or towing alongside; Rule 27(b)(i), pertaining to the lights displayed by vessels restricted in their ability to maneuver; Annex I, section 2(a)(i), pertaining to the height above the hull of the masthead light; and Annex I, section 3(b), pertaining to the placement of the sidelights, without interfering with their special functions as Large Harbor Tugs. YTB 780 and YTB 789 are tugs of special construction and functions. They perform towing services for naval vessels.

In the case of these tugs, the mast is hinged and is lowered only when the tugs are actually engaged in towing alongside or pushing ships having radically flared bows or sponsoned sides and sterns. When the mast is in the lowered position, the masthead lights, and task lights mounted on this mast, cannot be displayed. During such operations only the pilot house top-mounted auxiliary masthead light, sidelights, and sternlight will be exhibited.

The Judge Advocate General of the Navy has also certified that the aforementioned lights are located in closest possible compliance with the applicable 72 COLREGS requirements.

Moreover, it has been determined, in accordance with 32 CFR parts 296 and 701, that publication of this amendment for public comment prior to adoption is impracticable, unnecessary, and contrary to public interest since it is based on technical findings that the placement of lights on these vessels in a manner differently from that prescribed herein will adversely affect the vessels ability to perform their military functions.

List of Subjects in 32 CFR Part 706

Marine safety, Navigation (Water), and Vessels.

PART 706—[AMENDED]

Accordingly, 32 CFR Part 706 is amended as follows:

1. The authority citation for 32 CFR Part 706 continues to read:

Authority: 33 U.S.C. 1605.

§ 706.2 [Amended]

2. Table Three of § 706.2 is amended by adding the following vessel:

TABLE THREE

Vessel	No.	Masthead lights, arc of visibility; rule 21(a)	Side lights, arc of visibility; rule 21(b)	Stern light, arc of visibility; rule 21(c)	Side lights, distance inboard of ship's sides in meters; § 3(b) annex 1	Stern light, distance forward of stern in meters; rule 21(c)	Forward anchor light, height above hull in meters; § 2(K) annex 1	Anchor lights, relationship of aft light to forward light in meters; § 2(K) annex 1
SAUGUS	YTB 780				2.79	13.78		

[No modification to Table Three is necessary for YTB 789.]

§ 706.2 [Amended]

3. Paragraph 14, Table Four of § 706.2 is amended by adding the following vessel:

Vessel No.	Distance in meters of aux. masthead light below minimum required height. Annex I, sec. 2(a)(i)
YTB 780	3.53

4. Paragraph 14, Table Four of § 706.2 is amended by revising the information on the following vessel as follows:

Vessel No.	Distance in meters of aux. masthead light below minimum required height. Annex I, sec. 2(a)(i)
YTB 789	3.30

Dated: August 9, 1994.

H.E. Grant,

Rear Admiral, JAGC, U.S. Navy, Judge Advocate General.

[FR Doc. 94–26025 Filed 10–20–94; 8:45 am]

BILLING CODE 3810–AE–P

Department of the Air Force

32 CFR Part 806b

[Air Force Reg. 37–132]

Air Force Privacy Act Program

AGENCY: Department of the Air Force, DOD.

ACTION: Final rule.

SUMMARY: The Department of the Air Force is revising its Privacy Act Regulation. The revision adds a requirement for appointing Privacy Act (PA) monitors at HQ USAF and Secretary of the Air Force (SAF) offices; adds alternative of using the unsworn declaration; changes the fee rates; changes policy on releasing medical records to a subject when there is possible harm; changes refusal to amend based on opinion or interpretation to a denial with appeal rights; changes list of information releasable without consent; provides a new balancing test; aligns language on medical records of minors with DoD guidance; adds computer matching provisions; adds systems; and deletes provision for landfill burials.

In addition to the above changes, the Department of the Air Force is currently conducting a review of its exemption rules. Upon completion of the review, the Department of the Air Force will update its exemption rules.

EFFECTIVE DATE: October 21, 1994.

FOR FURTHER INFORMATION CONTACT: Mrs. Anne Turner at (703) 697–3491 or DSN 227–3491.

SUPPLEMENTARY INFORMATION:

Executive Order 12866

The Director, Administration and Management, Office of the Secretary of Defense has determined that this Privacy Act rule for the Department of Defense does not constitute 'significant regulatory action'. Analysis of the rule indicates that it does not have an annual effect on the economy of $100 million or more; does not create a serious inconsistency or otherwise interfere with an action taken or planned by another agency; does not materially alter the budgetary impact of entitlements, grants, user fees, or loan programs or the rights and obligations of recipients thereof; does not raise novel legal or policy issues arising out of legal mandates, the President's priorities, or the principles set forth in Executive Order 12866 (1993).

Regulatory Flexibility Act of 1980

The Director, Administration and Management, Office of the Secretary of Defense certifies that this Privacy Act rule for the Department of Defense does not have significant economic impact on a substantial number of small entities because it is concerned only with the administration of Privacy Act systems of records within the Department of Defense.

Paperwork Reduction Act

The Director, Administration and Management, Office of the Secretary of Defense certifies that this Privacy Act rule for the Department of Defense imposes no information requirements beyond the Department of Defense and that the information collected within the Department of Defense is necessary and consistent with 5 U.S.C. 552a, known as the Privacy Act of 1974.

The Department of the Air Force previously published its proposed rule on July 28, 1994, at 59 FR 38389. No comments were received that resulted in a contrary determination, therefore, the Department of the Air Force is publishing this final rule.

List of Subjects in 32 CFR Part 806b

Privacy.

Accordingly, 32 CFR part 806b is revised to read:

PART 806B–AIR FORCE PRIVACY ACT PROGRAM

Subpart A–Overview of the Privacy Act Program

806b.1 Basic guidelines.
806b.2 Violation penalties.
806b.3 Personal notes.
806b.4 Responsibilities.

Subpart B–Obtaining Law Enforcement Records and Promises of Confidentiality

806b.5 Obtaining law enforcement records.
806b.6 Promising confidentiality.

Subpart C–Collecting Personal Information

806b.7 How to collect personal information.
806b.8 When to give privacy act statements (PAS).
806b.9 Requesting the social security number (SSN).

Subpart D–Giving Access to Privacy Act Records

806b.10 Making a request for access.
806b.11 Processing a request for access.
806b.12 Fees.
806b.13 Denying or limiting access.
806b.14 Denial authorities.

Subpart E–Amending the Record

806b.15 Amendment reasons.
806b.16 Responding to amendment requests.
806b.17 Approving or denying a record amendment.
806b.18 Seeking review of unfavorable agency determinations.
806b.19 Appeal procedures.
806b.20 Contents of Privacy Act case files.

Subpart F–Privacy Act Notifications

806b.21 When to include a privacy act warning statement in publications.
806b.22 Publishing system notices.
806b.23 Timing of notices.

Subpart G–Protecting and Disposing of Records

806b.24 Protecting records.
806b.25 Balancing protection.
806b.26 Disposing of records.

Subpart H–Privacy Act Exemptions

806b.27 Requesting an exemption.
806b.28 Exemption types.
806b.29 Authorizing exemptions.
806b.30 Approved exemptions.

Subpart I–Disclosing Records to Third Parties

806b.31 Disclosure considerations.
806b.32 Disclosing information for which consent is not required.
806b.33 Disclosing other information.
806b.34 Agencies or individuals to whom the Air Force may release privacy information.
806b.35 Disclosing the medical records of minors.
806b.36 Disclosure accounting.
806b.37 Computer matching.

Subpart J–Training

806b.38 Who needs training.
806b.39 Training tools.

Subpart K–Privacy Act Reporting

806b.40 Privacy act report (RCS: DD–DA&M(A)1379).

Appendix A to part 806b – Glossary of References, Abbreviations, Acronyms, and Terms
Appendix B to part 806b – Preparing a System Notice
Appendix C to part 806b – General and Specific Exemptions

Authority: Pub. L. 93–579, 88 Stat 1896 (5 U.S.C. 552a).

Subpart A – Overview of the Privacy Act Program

§ 806b.1 Basic guidelines.

The Privacy Act of 1974 and this part apply only to information in Air Force systems of records on living United States citizens and permanent resident aliens.

(a) An official system of records must be:

(1) Authorized by law or Executive Order.

(2) Controlled by an Air Force or lower level directive.

(3) Needed to carry out an Air Force mission or function.

(b) The Air Force does not:

(1) Keep records on how a person exercises First Amendment rights. EXCEPTIONS are when: The Air Force has the permission of that individual or is authorized by federal statute; or the information pertains to an authorized law enforcement activity.

(2) Penalize or harass an individual for exercising rights guaranteed under the Privacy Act. Give reasonable aid to individuals exercising their rights.

(c) Air Force members:

(1) Keep paper and electronic records containing personal information and retrieved by name or personal identifier only in approved systems published in the **Federal Register**.

(2) Collect, maintain, and use information in such systems only to support programs authorized by law or Executive Order.

(3) Safeguard the records in the system and keep them the minimum time required.

(4) Keep the records timely, accurate, complete, and relevant.

(5) Amend and correct records on request.

(6) Let individuals review and receive copies of their own records unless the Secretary of the Air Force approved an exemption for the system or the Air Force created the records in anticipation of a civil action or proceeding.

(7) Provide a review of decisions that deny individuals access to or amendment of their records.

§ 806b.2 Violation penalties.

An individual may file a civil suit against the Air Force for failing to comply with the Privacy Act. The courts may find an individual offender guilty of a misdemeanor and fine that individual offender not more than $5,000 for:

(a) Willfully maintaining a system of records that doesn't meet the public notice requirements.

(b) Disclosing information from a system of records to someone not entitled to the information.

(c) Obtaining someone else's records under false pretenses.

§ 806b.3 Personal notes.

If you keep personal notes on individuals to use as memory aids to supervise or perform other official functions, and do not share them with others, and an Air Force directive does not require their maintenance, the Privacy Act does not apply.

§ 806b.4 Responsibilities.

(a) The Administrative Assistant to the Secretary of the Air Force (SAF/AA) manages the entire program.

(b) The Office of the General Counsel to the Secretary of the Air Force (SAF/GCA) makes final decisions on appeals.

(c) The Director of Information Management (SAF/AAI), through the Access Programs Office of the Policy Division, (SAF/AAIA):

(1) Administers procedures outlined in this part.

(2) Submits system notices and required reports to the Defense Privacy Office.

(3) Guides major commands (MAJCOM) and field operating agencies (FOA).

(d) MAJCOM and FOA commanders, HQ USAF and Deputy Chiefs of Staff (DCS), and comparable officials, and SAF offices implement this part. Each HQ USAF and SAF office appoints a Privacy Act monitor. Send the name, office symbol, and phone number to SAF/AAIA.

(e) MAJCOM and FOA Information Managers:

(1) Manage the program.

(2) Appoint a command Privacy Act officer.

(3) Send the name, office symbol, and phone number to SAF/AAIA.

(f) Privacy Act Officers:

(1) Guide and train.

(2) Review the program at regular intervals.

(3) Submit reports.

(4) Review all publications and forms for compliance with this part.

(5) Review system notices.

(6) Investigate complaints.

(7) Staff denial recommendations (at MAJCOMs and FOAs only).

(g) System Managers:

(1) Decide the need for, and content of systems.

(2) Manage and safeguard the system.

(3) Train personnel on Privacy Act requirements.

(4) Protect records from unauthorized disclosure, alteration, or destruction.

(5) Prepare system notices and reports.

(6) Answer Privacy Act requests.

(7) Keep records of disclosures.

(8) Evaluate the systems annually.

(h) Privacy Act Monitors (PAM):

(1) Are the focal point in their functional area for general Privacy Act questions and correspondence.

(2) Maintain a list of all systems of records and system managers in their area.

(3) Act as liaison with the Privacy Act Officer.

(4) Maintain statistics for the annual Privacy Act report.

Subpart B - Obtaining Law Enforcement Records and Promises of Confidentiality

§ 806b.5 Obtaining law enforcement records.

The Commander AFOSI; the Chief, Air Force Security Police Agency (AFSPA); MAJCOM, FOA, and base chiefs of security police; AFOSI detachment commanders; and designees of those offices may ask another agency for records for law enforcement under 5 U.S.C. 552a(b)(7). The requesting office must indicate in writing the specific part of the record desired and identify the law enforcement activity asking for the record.

§ 806b.6 Promising confidentiality.

Record promises of confidentiality to exempt from disclosure any 'confidential' information under subsections (k)(2), (k)(5), or (k)(7) of the Privacy Act.

Subpart C – Collecting Personal Information

§ 806b.7 How to collect personal information.

Collect personal information directly from the subject of the record when possible. You may ask third parties when:

(a) You must verify information.

(b) You want opinions or evaluations.

(c) You can't contact the subject.

(d) The subject asks you.

§ 806b.8 When to give Privacy Act statements (PAS).

(a) Give a PAS orally or in writing:

(1) To anyone from whom you are collecting personal information that will be put in a system of records.

(2) Whenever you ask someone for his or her Social Security Number (SSN).

Note: Do this regardless of how you collect or record the answers. You may display a sign in areas where people routinely furnish this kind of information. Give a copy of the PAS if asked. Do not ask the person to sign the PAS.

(3) A PAS must include four items:

(i) Authority: The legal authority, that is, the United States Code or Executive Order authorizing the program the system supports.

(ii) Purpose: The reason you are collecting the information.

(iii) Routine Uses: A list of where and why the information will be disclosed outside DoD.

(iv) Disclosure: Voluntary or Mandatory. (Use Mandatory only when disclosure is required by law and the individual will be penalized for not providing information.) Include any consequences of nondisclosure in nonthreatening language.

§ 806b.9 Requesting the social security number (SSN).

(a) Do not deny people a legal right, benefit, or privilege for refusing to give their SSNs unless the law requires disclosure, or a law or regulation adopted before January 1, 1975, required the SSN and the Air Force uses it to verify a person's identity in a system of records established before that date. When you ask for an SSN to create a record, tell the individual:

(1) The statute, regulation, or rule authorizing you to ask for the SSN.

(2) The uses that will be made of the SSN.

(3) If he or she is legally obligated to provide the SSN.

(b) The Air Force requests an individual's SSN and provides the individual information required by law when anyone enters military service or becomes an Air Force civilian employee. The Air Force uses the SSN as a service or employment number to reference the individual's official records. When you ask someone for an SSN as identification (ID) to retrieve an existing record, you do not have to restate this information.

(c) Executive Order 9397, November 22, 1943, authorizes using the SSN as a personal identifier. This order is not adequate authority to collect an SSN to create a record. When law does not require disclosing the SSN or when the system of records was created after January 1, 1975, you may ask for the SSN, but the individual does not have to disclose it. If the individual refuses to respond, use alternative means of identifying records.

(d) SSNs are personal and unique to each individual. Protect them as FOR OFFICIAL USE ONLY (FOUO). Do not disclose them to anyone without an official need to know.

Subpart D – Giving Access to Privacy Act Records

§ 806b.10 Making a request for access.

Persons or their designated representatives may ask for a copy of their records in a system of records. Requesters need not state why they want access to their records. Verify the identity of the requester to avoid unauthorized disclosures. How you verify identity will depend on the sensitivity of the requested records. Persons without access to notary services may use an unsworn declaration in the following format: 'I declare under penalty of perjury (if outside the United States, add 'under the laws of the United States of America') that the foregoing is true and correct. Executed on (date). (Signature).'

§ 806b.11 Processing a request for access.

Consider a request from an individual for his or her own records in a system of records under both the Freedom of Information Act (FOIA) and the Privacy Act regardless of the Act cited. The requester need not cite any Act. Process the request under whichever Act gives the most information. When necessary, tell the requester under which Act you processed the request and why.

(a) Requesters should describe the records they want. They do not have to name a system of records number, but they should at least name a type of record or functional area. For requests that ask for 'all records about me,' ask for more information and tell the person how to review the Air Force systems of records published in the **Federal Register** or in AFDIR 37–144 [1], 'Privacy Act Systems of Record' (formerly AFR 4–36).

(b) Requesters should not use government equipment, supplies, stationery, postage, telephones, or official mail channels for making Privacy Act requests. Privacy Act Officers and system managers process such requests but tell requesters that using government resources to make Privacy Act requests is not authorized.

(c) Tell the requester if a record exists and how to review the record. If possible, respond to requests within 10 workdays of receiving them. If you cannot answer the request in 10 workdays, send a letter explaining why and give an approximate completion date no more than 20 workdays after the first office received the request.

(d) Show or give a copy of the record to the requester within 30 workdays of receiving the request unless the system is exempt and the Air Force lists the exemption in appendix C of this part; or published as a final rule in the **Federal Register**. Give information in a form the requester can understand.

(e) If the requester wants another person present during the record review, the system manager may ask for written consent to authorize discussing the record with another person present.

§ 806b.12 Fees.

Give the first 100 pages free, and charge only reproduction costs for the remainder. Copies cost $.15 per page; microfiche costs $.25 per fiche. Charge the fee for the first 100 pages if records show that the Air Force already responded to a request for the same records at no charge. Do not charge fees:

(a) When the requester can get the record without charge under another publication (for example, medical records).

(b) For search.

(c) For reproducing a document for the convenience of the Air Force.

(d) For reproducing a record so the requester can review it.

§ 806b.13 Denying or limiting access.

Process access denials within five workdays after you receive a request for access. When you may not release a record, send a copy of the request, the record, and why you recommend denying access (including the applicable exemption) to the denial authority through the Staff Judge Advocate (SJA) and the Privacy Act officer. The SJA gives a written legal opinion on the denial. The MAJCOM or FOA Privacy Act officer reviews the file, gets written advice from the SJA and the functional office of primary responsibility (OPR), and makes a recommendation to the denial authority. The denial authority sends the requester a letter with the decision. If the denial authority grants access, release the record. If the denial authority refuses access, tell the requester why and explain pertinent appeal rights.

(a) Before you deny a request for access to a record, make sure that: (1) The system has an SAF approved exemption.

(2) The exemption covers each document.

(3) Nonexempt parts are segregated.

(b) You may refuse to give out medical records if a physician believes that doing so could harm the person's mental or physical health. You have these options:

(1) Ask the requester to get a letter from a physician to whom you can send the records. Include a letter explaining to the physician that giving the records directly to the individual could be harmful.

(2) Offer the services of a military physician other than one who provided treatment if naming the physician poses a hardship on the individual.

(c) Do not delete third-party information from a record when the subject requests access, except as noted in § 806b.13(d), unless the Air Force covers the record with an established exemption (appendix C of this part). Presume that all information in a file pertains to the subject of the file.

(d) Do not release third-party personal data (such as SSN and home address). This action is not a denial.

(e) Withhold records compiled in connection with a civil action or other proceeding including any action where the Air Force expects judicial or administrative adjudicatory proceedings. This exemption does not cover criminal actions. Do not release attorney work products prepared before, during, or after the action or proceeding.

§ 806b.14 Denial authorities.

These officials or a designee may deny access or amendment of records. Send a letter to SAF/AAIA with the position titles of designees. You must get SAF/AA approval before delegating this authority to a lower level. Send

[1] Copies may be obtained at cost from the National Technical Information Service, 5285 Port Royal Road, Springfield, VA 22161.

requests for waiver with justification to SAF/AAIA. Authorities are:

(a) DCSs and chiefs of comparable offices or higher level at SAF or HQ USAF.

(b) MAJCOM or FOA commanders.

(c) HQ USAF/DPCP, Pentagon, Washington, DC 20330–5060 (for civilian personnel records).

(d) Commander, Air Force Office of Special Investigations (AFOSI), Washington, DC 20332–6001 (for AFOSI records).

Subpart E – Amending the Record

§ 806b.15 Amendment reasons.

Individuals may ask to have their records amended to make them accurate, timely, relevant, or complete. System managers routinely correct a record if the requester can show that it is factually wrong.

§ 806b.16 Responding to amendment requests:

(a) Anyone may request minor corrections orally. Requests for more serious modifications should be in writing.

(b) After verifying the identity of the requester, make the change, notify all known recipients of the record, and inform the individual.

(c) Acknowledge requests within 10 workdays of receipt. Give an expected completion date unless you complete the change within that time. Final decisions must take no longer than 30 workdays.

§ 806b.17 Approving or denying a record amendment.

The Air Force does not usually amend a record when the change is based on opinion, interpretation, or subjective official judgment. This action constitutes a denial, and requesters may appeal. If the system manager decides not to amend or partially amend the record, send a copy of the request, the record, and the recommended denial reasons to the denial authority through the SJA and the Privacy Act officer. SJAs will include a legal opinion.

(a) The MAJCOM or FOA Privacy Act officer reviews the proposed denial, gets a legal opinion from the SJA and written advice from the functional OPR, and makes a recommendation to the denial authority.

(b) The denial authority sends the requester a letter with the decision. If the denial authority approves the request, amend the record and notify all previous recipients that it has been changed. If the authority denies the request, give the requester the statutory authority, reason, and pertinent appeal rights.

§ 806b.18 Seeking review of unfavorable agency determinations.

Requesters should pursue record corrections of subjective matters and opinions through proper channels to the Civilian Personnel Office using grievance procedures or the Air Force Board for Correction of Military Records (AFBCMR). Record correction requests denied by the AFBCMR are not subject to further consideration under this part.

§ 806b.19 Appeal procedures.

(a) Individuals may request a denial review by writing to the Secretary of the Air Force through the denial authority within 60 calendar days after receiving a denial letter. The denial authority promptly sends a complete appeal package to SAF/AAIA, including:

(1) Original appeal letter.

(2) Initial request.

(3) Initial denial.

(4) Copy of the record.

(5) Any internal records or coordination actions relating to the denial.

(6) Denial authority's comments on the appellant's arguments.

(7) Legal reviews.

(b) If the denial authority reverses an earlier denial and grants access or amendment, notify the requester immediately.

(c) SAF/AAIA reviews the denial and forwards to SAF/GCA for legal review or staffing to grant or deny the appeal. SAF/GCA tells the requester the final Air Force decision and explains judicial review rights.

(d) The requester may file a concise statement of disagreement with the system manager if SAF/GCA denies the request to amend the record. SAF/GCA explains the requester's rights when they issue the final appeal decision.

(1) The records should clearly show that a statement of disagreement is filed with the record or separately.

(2) The disputed part of the record must show that the requester filed a statement of disagreement.

(3) Give copies of the statement of disagreement to the record's previous recipients. Inform subsequent record users about the dispute and give them a copy of the statement with the record.

(4) The system manager may include a brief summary of the reasons for not amending the record. Limit the summary to the reasons SAF/GCA gave to the individual. The summary is part of the individual's record, but it is not subject to amendment procedures.

§ 806b.20 Contents of Privacy Act case files.

Do not keep copies of disputed records in this file. Use the file solely for statistics and to process requests. Do not use the case files to make any kind of determination about an individual. Document reasons for untimely responses. These files include:

(a) Requests from and replies to individuals on whether a system has records about them.

(b) Requests for access or amendment.

(c) Approvals, denials, appeals, and final review actions.

(d) Coordination actions and related papers.

Subpart F – Privacy Act Notifications

§ 806b.21 When to include a Privacy Act warning statement in publications.

Include a Privacy Act Warning Statement in each Air Force publication that requires collecting or keeping personal information in a system of records. Also include the warning statement when publications direct collection of the SSN from the individual. The warning statement will cite legal authority and the system of records number and title. You can use the following warning statement: 'This part requires collecting and maintaining information protected by the Privacy Act of 1974 authorized by (U.S.C. citation and or Executive Order number). System of records notice (number and title) applies.'

§ 806b.22 Publishing system notices.

The Air Force must publish notices in the **Federal Register** of new, amended, and deleted systems to inform the public of what records the Air Force keeps and give them an opportunity to comment. The Privacy Act also requires submission of new or significantly altered systems to the Office of Management and Budget (OMB) and both houses of the Congress before publication in the **Federal Register**. This includes:

(a) Starting a new system.

(b) Instituting significant changes to an existing system.

(c) Sending out data collection forms or instructions.

(d) Issuing a request for proposal or invitation for bid to support a new system.

§ 806b.23 Timing of notices.

At least 120 days before the effective start date, system managers must send the system notice to SAF/AAIA on a 5 1/4 or 3 1/2–inch disk in Wordstar (ASCII text file) or Microsoft Word, with a paper copy highlighting any changes through the MAJCOM or FOA Privacy Act Officer. See Appendix B of this part for a sample system notice.

Subpart G – Protecting and Disposing of Records

§ 806b.24 Protecting records.

Protect information according to its sensitivity level. Consider the personal sensitivity of the information and the risk of loss or alteration. Most information in systems of records is FOR OFFICIAL USE ONLY (FOUO). Refer to AFI 37–131 [2], 'Air Force Freedom of Information Act Program,' for protection methods.

§ 806b.25 Balancing protection.

Balance additional protection against risk and cost. AF Form 3227, 'Privacy Act Cover Sheet', is available for use with Privacy Act material. For example, a password may be enough protection for an automated system with a log-on protocol. Classified computer systems or those with established audit and password systems are obviously less vulnerable than unprotected files or word processors in offices that are periodically empty. Follow AFI 33–202 [3], 'The Air Force Computer Security Program,' for procedures on safeguarding personal information in automated records.

§ 806b.26 Disposing of records.

You may use the following methods to dispose of records protected by the Privacy Act according to records retention schedules:

(a) Destroy by any method that prevents compromise, such as tearing, burning, or shredding, so long as the personal data is not recognizable and beyond reconstruction.

(b) Degauss or overwrite magnetic tapes or other magnetic medium.

(c) Dispose of paper products through the Defense Reutilization and Marketing Office (DRMO) or through activities who manage a base-wide recycling program. The recycling sales contract must contain a clause requiring the contractor to safeguard privacy material until its destruction and to pulp, macerate, shred, or otherwise completely destroy the records. Originators must safeguard Privacy Act material until it is transferred to the recycling contractor. A federal employee or, if authorized, a contractor employee must witness the destruction. This transfer does not require a disclosure accounting.

Subpart H – Privacy Act Exemptions

§ 806b.27 Requesting an exemption.

A system manager who believes that a system needs an exemption from some or all of the requirements of the Privacy Act should send a request to SAF/AAIA through the MAJCOM or FOA Privacy Act Officer. The request should detail the reasons for the exemption and the section of the Act that allows the exemption. SAF/AAIA gets approval for the request through SAF/AA and the Defense Privacy Office.

§ 806b.28 Exemption types.

(a) A general exemption frees a system from most parts of the Privacy Act.

(b) A specific exemption frees a system from only a few parts of the Privacy Act.

§ 806b.29 Authorizing exemptions.

Only SAF/AA can exempt systems of records from any part of the Privacy Act. Denial authorities can withhold records using these exemptions only if SAF/AA previously approved and published an exemption for the system in the **Federal Register**. Appendix C of this part lists the systems of records that have approved exemptions.

§ 806b.30 Approved exemptions.

Approved exemptions exist under 5 U.S.C. 552a for:

(a) Certain systems of records used by activities whose principal function is criminal law enforcement (subsection (j)(2)).

(b) Classified information in any system of records (subsection (k)(1)).

(c) Law enforcement records (other than those covered by subsection (j)(2)). The Air Force must allow an individual access to any record that is used to deny rights, privileges or benefits to which he or she would otherwise be entitled by federal law or for which he or she would otherwise be eligible as a result of the maintenance of the information (unless doing so would reveal a confidential source) (subsection (k)(2)).

(d) Statistical records required by law. Data is for statistical use only and may not be used to decide individuals' rights, benefits, or entitlements (subsection (k)(4)).

(e) Data to determine suitability, eligibility, or qualifications for federal service or contracts, or access to classified information if access would reveal a confidential source (subsection (k)(5)).

(f) Qualification tests for appointment or promotion in the federal service if access to this information would compromise the objectivity of the tests (subsection (k)(6)).

(g) Information which the Armed Forces uses to evaluate potential for promotion if access to this information would reveal a confidential source (subsection (k)(7)).

Subpart I – Disclosing Records to Third Parties

§ 806b.31 Disclosure considerations.

Before releasing personal information to third parties, consider the consequences, check accuracy, and make sure that no law or directive bans disclosure. You can release personal information to third parties when the subject agrees orally or in writing. Air Force members consent to releasing their home telephone number and address when they sign and check the 'Do Consent' block on the AF Form 624, 'Base/Unit Locator and PSC Directory' (see AFI 37–129 [4], 'Base and Unit Personnel Locators and Postal Directories').

(a) Before including personal information such as home addresses, home phones, and similar information on social rosters or directories, ask for written consent statements. Otherwise, do not include the information.

(b) You must get written consent before releasing any of these items of information:

(1) Marital status.

(2) Number and sex of dependents.

(3) Gross salary of military personnel (see § 806b.32 for releasable pay information).

(4) Civilian educational degrees and major areas of study.

(5) School and year of graduation.

(6) Home of record.

(7) Home address and phone.

(8) Age and date of birth.

(9) Present or future assignments for overseas or for routinely deployable or sensitive units.

(10) Office and unit address and duty phone for overseas or for routinely deployable or sensitive units.

§ 806b.32 Disclosing information for which consent is not required.

You don't need consent before releasing any of these items:

(a) Information releasable under the FOIA.

(b) Information for use within the Department of Defense by officials or employees with a need to know.

(c) Name.

(d) Rank.

(e) Grade.

(f) Air Force specialty code (AFSC).

(g) Pay (including base pay, special pay, all allowances except Basic Allowance for Quarters (BAQ) and Variable Housing Allowance (VHA)).

(h) Gross salary for civilians.

(i) Past duty assignments.

(j) Present and future approved and announced stateside assignments.

---

[2] See footnote 1 to section 806b.11, of this part.

[3] See footnote 1 to section 806b.11, of this part.

[4] See footnote 1 to section 806b.11, of this part.

(k) Position title.

(l) Office, unit address, and duty phone number.

(m) Date of rank.

(n) Entered on active duty (EAD) date.

(o) Pay date.

(p) Source of commission.

(q) Professional military education.

(r) Promotion sequence number.

(s) Military awards and decorations.

(t) Duty status of active, retired, or reserve.

(u) Active duty official attendance at technical, scientific, or professional meetings.

(v) Biographies and photos of key personnel.

§ 806b.33 Disclosing other information.

Use these guidelines to decide whether to release information:

(a) Would the subject have a reasonable expectation of privacy in the information requested?

(b) Would disclosing the information benefit the general public? The Air Force considers information as meeting the public interest standard if it reveals anything regarding the operations or activities of the agency, or performance of its statutory duties.

(c) Balance the public interest against the individual's probable loss of privacy. Do not consider the requester's purpose, circumstances, or proposed use.

§ 806b.34 Agencies or individuals to whom the Air Force may release privacy information.

The Air Force may release information without consent to these individuals or agencies:

(a) Agencies outside the Department of Defense for a Routine Use published in the **Federal Register**. The purpose of the disclosure must be compatible with the purpose in the Routine Use. When initially collecting the information from the subject, the Routine Uses block in the Privacy Act Statement must name the agencies and reason.

(b) The Bureau of the Census to plan or carry out a census or survey under 13 U.S.C. 8.

(c) A recipient for statistical research or reporting. The recipient must give advanced written assurance that the information is for statistical purposes only.

Note: No one may use any part of the record to decide on individuals' rights, benefits, or entitlements. You must release records in a format that makes it impossible to identify the real subjects.

(d) The Archivist of the United States and the National Archives and Records Administration (NARA) to evaluate records for permanent retention. Records stored in Federal Records Centers remain under Air Force control.

(e) A federal, state, or local agency (other than the Department of Defense) for civil or criminal law enforcement. The head of the agency or a designee must send a written request to the system manager specifying the record or part needed and the law enforcement purpose. The system manager may also disclose a record to a law enforcement agency if the agency suspects a criminal violation. This disclosure is a Routine Use for all Air Force systems of records and is published in the **Federal Register**.

(f) An individual or agency that needs the information for compelling health or safety reasons. The affected individual need not be the record subject.

(g) The Congress, a congressional committee, or a subcommittee, for matters within their jurisdictions.

(h) A congressional office acting for the record subject. A published, blanket Routine Use permits this disclosure. If the material for release is sensitive, get a release statement.

(i) The Comptroller General or an authorized representative of the General Accounting Office on business.

(j) A court order of a court of competent jurisdiction, signed by a judge.

(k) A consumer credit agency according to the Debt Collections Act when a published system notice lists this disclosure as a Routine Use.

(l) A contractor operating a system of records under an Air Force contract. Records maintained by the contractor for the management of contractor employees are not subject to the Privacy Act.

§ 806b.35 Disclosing the medical records of minors.

Air Force personnel may disclose the medical records of minors to their parents or legal guardians. The laws of each state define the age of majority.

(a) The Air Force must obey state laws protecting medical records of drug or alcohol abuse treatment, abortion, and birth control. If you manage medical records, learn the local laws and coordinate proposed local policies with the servicing SJA.

(b) Outside the United States (overseas), the age of majority is 18. Unless parents or guardians have a court order granting access or the minor's written consent, they will not have access to minor's medical records overseas when the minor sought or consented to treatment between the ages of 15 and 17 in a program where regulation or statute provides confidentiality of records and he or she asked for confidentiality.

§ 806b.36 Disclosure accountings.

System managers must keep an accurate record of all disclosures made from any system of records except disclosures to DoD personnel for official use or disclosures under the FOIA. System managers may use AF Form 771, 'Accounting of Disclosures'.

(a) System managers may file the accounting record any way they want as long as they give it to the subject on request, send corrected or disputed information to previous record recipients, explain any disclosures, and provide an audit trail for reviews. Include in each accounting:

(1) Release date.

(2) Description of information.

(3) Reason for release.

(4) Name and address of recipient.

(b) Some exempt systems let you withhold the accounting record from the subject.

(c) You may withhold information about disclosure accountings for law enforcement purposes at the law enforcement agency's request.

§ 806b.37 Computer matching.

Computer matching programs electronically compare records from two or more automated systems which may include the Department of Defense, another federal agency, or a state or other local government. A system manager proposing a match that could result in an adverse action against a federal employee must meet these requirements of the Privacy Act:

(a) Prepare a written agreement between participants.

(1) Secure approval of the Defense Data Integrity Board.

(2) Publish a matching notice in the **Federal Register** before matching begins.

(3) Ensure full investigation and due process.

(4) Act on the information, as necessary.

(b) The Privacy Act applies to matching programs that use records from:

(1) Federal personnel or payroll systems.

(2) Federal benefit programs where matching:

(i) Determines federal benefit eligibility,

(ii) Checks on compliance with benefit program requirements,

(iii) Recovers improper payments or delinquent debts from current or former beneficiaries.

(c) Matches used for statistics, pilot programs, law enforcement, tax

administration, routine administration, background checks and foreign counterintelligence, and internal matching that won't cause any adverse action are exempt from Privacy Act matching requirements.

(d) Any activity that expects to participate in a matching program must contact SAF/AAIA immediately. System managers must prepare a notice for publication in the **Federal Register** with a Routine Use that allows disclosing the information for use in a matching program. Send the proposed system notice to SAF/AAIA. Allow 180 days for processing requests for a new matching program.

(e) Record subjects must receive prior notice of a match. The best way to do this is to include notice in the Privacy Act Statement on forms used in applying for benefits. Coordinate computer matching statements on forms with SAF/AAIA through the MAJCOM Privacy Act Officer.

Subpart J – Training

§ 806b.38 Who needs training.

The Privacy Act requires training for all persons involved in the design, development, operation and maintenance of any system of records. Some persons may need more specialized training. They include information managers, supervisors, and individuals working with medical, financial, security, and personnel records.

§ 806b.39 Training tools.

Helpful aids include:

(a) AFH 37–146 [5], 'Privacy Act Training', a self-paced course.

(b) 'The Privacy Act of 1974,' a 32–minute film developed by the Defense Privacy Office. Consult your local audiovisual library.

(c) 'A Manager's Overview, What You Need to Know About the Privacy Act'. Contact SAF/AAIA for copies.

Note: Formal school training groups that develop or modify blocks of instruction must send the material to SAF/AAIA for coordination.

Subpart K – Privacy Act Reporting

§ 806b.40 Privacy Act Report (RCS: DD-DA&M(A)1379).

By March 1, of each year, MAJCOM and FOA Privacy Act officers must send SAF/AAIA a report covering the previous calendar year. The report includes:

(a) Total number of requests granted in whole.

(b) Total number of requests granted in part.

(c) Total number of requests denied and the Privacy Act exemptions used.

(d) Total number of requests for which no record was found.

(e) Total number of amendment requests granted in whole.

(f) Total number of amendment requests granted in part.

(g) Total number of amendment requests wholly denied.

(h) Specific recommendations for changes to the Act or the Privacy Act Program.

Appendix A to part 806b – Glossary of References, Abbreviations, Acronyms, and Terms

SECTION A–REFERENCES

a. Privacy Act of 1974, as amended, Pub. L. 93–579, 88 Stat 1896 (5 U.S.C. 552a).

b. 10 U.S.C 8013, 'Secretary of the Air Force: Powers and Duties.'

c. Executive Order 9397, 'Numbering System for Federal Accounts Relating to Individual Persons.'

d. 32 CFR part 806b, 'Air Force Privacy Act Program.'

e. DoD Directive 5400.11 [1], 'Department of Defense Privacy Program.'

f. DoD 5400.11–R [2], 'Department of Defense Privacy Program.'

g. AFI 33–202 [3], 'The Air Force Computer Security Program' (formerly AFR 205–16).

h. AFPD 37–1 [4], 'Air Force Information Management.'

i. AFI 37–131 [5], 'Air Force Freedom of Information Act Program' (formerly AFR 4–33).

j. AFI 37–129 [6], 'Base and Unit Personnel Locators and Postal Directories' (formerly AFR 11–24).

k. AFMAN 37–139 [7], 'Disposition of Records' (formerly AFR 4–20, volume 2).

l. AFDIR 37–144 [8], 'Air Force Privacy Act Systems of Records Notices.'

m. AFH 37–146 [9], 'Privacy Act Training.'

SECTION B–DEFINITIONS ABBREVIATIONS AND ACRONYMS

a. AETC – Air Education and Training Command

b. AFA – Air Force Academy

c. AFBCMR – Air Force Board for Correction of Military Records

d. AFISA – Air Force Intelligence Services Agency

e. AFMC – Air Force Materiel Command

f. AFOSI – Air Force Office of Special Investigations

g. AFSC – Air Force Specialty Code

h. AFSCO – Air Force Security Clearance Office

i. AFSPA – Air Force Security Police Agency

j. ASCII – American Standard Code for Information Interchange

k. BAQ – Basic Allowance for Quarters

l. CFR – Code of Federal Regulations

m. DCS – Deputy Chief of Staff

n. DoD – Department of Defense

o. DR&MO – Defense Reutilization and Marketing Office

p. EAD – Entered on Active Duty

q. FOA – Field Operating Agency

r. FOIA – Freedom of Information Act

s. FOUO – For Official Use Only

t. IG – Inspector General

u. IMC – Interim Message Change

v. LE – Logistics and Engineering

w. MAJCOM – Major Command

x. MIRS – Management Information and Research System

y. MP – Military Personnel

z. MPC – Military Personnel Center

aa. NARA – National Archives and Records Administration

bb. OMB – Office of Management and Budget

cc. OPR – Office of Primary Responsibility

dd. PA – Privacy Act

ee. PAM – Privacy Act Monitor

ff. PAS – Privacy Act Statement

gg. RCS – Reports Control Symbol

hh. SAF – Secretary of the Air Force

ii. SAF/AA – The Administrative Assistant to the Secretary of the Air Force

jj. SAF/AAIA – Policy Division, Directorate of Information Management

kk. SAF/GCA – Assistant General Counsel for Civilian Personnel and Fiscal Law

ll. SG – Surgeon General

mm. SJA – Staff Judge Advocate

nn. SP – Security Police

oo. SSN – Social Security Number

pp. US – United States

---

[5] See footnote 1 to section 806b.11, of this part.

[1] Copies may be obtained at cost from the National Technical Information Service, 5285 Port Royal Road, Springfield, VA 22161.

[2] See footnote 1 to section B, appendix A to part 806b.

[3] See footnote 1 to section B, appendix A to part 806b.

[4] See footnote 1 to section B, appendix A to part 806b.

[5] See footnote 1 to section B, appendix A to part 806b.

[6] See footnote 1 to section B, appendix A to part 806b.

[7] See footnote 1 to section B, appendix A to part 806b.

[8] See footnote 1 to section B, appendix A to part 806b.

[9] See footnote 1 to section B, appendix A to part 806b.

qq. USAF – United States Air Force
rr. U.S.C. – United States Code
ss. VHA – Variable Housing Allowance

SECTION C–TERMS

a. *Access.* Allowing individuals to review or receive copies of their records.

b. *Amendment.* The process of adding, deleting, or changing information in a system of records to make the data accurate, relevant, timely, or complete.

c. *Computer matching.* A computerized comparison of two or more automated systems of records or a system of records with non-Federal records to establish or verify eligibility for payments under Federal benefit programs or to recover delinquent debts for these programs.

d. *Confidential source.* A person or organization giving information under an express or implied promise of confidentiality made before September 27, 1975.

e. *Confidentiality.* An expressed and recorded promise to withhold the identity of a source or the information provided by a source. The Air Force promises confidentiality only when the information goes into a system with an approved exemption for protecting the identity of confidential sources.

f. *Defense Data Integrity Board.* Representatives from the Services and the Department of Defense who oversee, coordinate, and approve all DoD computer matching programs covered by the Act.

g. *Denial authority.* The individuals with authority to deny requests for access or amendment of records under the Privacy Act.

h. *Disclosure.* Giving information from a system, by any means, to anyone other than the record subject.

i. *Federal benefit program.* A federally funded or administered program for individuals that provides cash or in-kind assistance (payments, grants, loans, or loan guarantees).

j. *Individual.* A living United States citizen or a permanent resident alien.

k. *Matching agency.* The agency that performs a computer match.

l. *Minor.* Anyone under the age of majority according to local state law. If there is no applicable state law, a minor is anyone under age 18. Military members and married persons are not minors, no matter what their chronological age.

m. *Personal identifier.* A name, number, or symbol which is unique to an individual, usually the person's name or SSN.

n. *Personal information.* Information about an individual other than items of public record.

o. *Privacy Act request.* An oral or written request by an individual about his or her records in a system of records.

p. *Recipient agency.* An agency or contractor that receives the records and actually performs the computer match.

q. *Record.* Any information about an individual.

r. *Routine use.* A disclosure of records to individuals or agencies outside the Department of Defense for a use that is compatible with the purpose for which the Air Force created the records.

s. *Source agency.* A federal, state, or local government agency that discloses records for the purpose of a computer match.

t. *System manager.* The official who is responsible for managing a system of records, including policies and procedures to operate and safeguard it. Local system managers operate record systems or are responsible for part of a decentralized system.

u. *System of records.* A group of records containing personal information retrieved by the subject's name, personal identifier, or individual identifier through a cross-reference system.

v. *System notice.* The official public notice published in the **Federal Register** of the existence and content of the system of records.

Appendix B to part 806b – Preparing a System Notice

The following elements comprise a system of records notice for publication in the **Federal Register**:

a. *System identifier.* SAF/AAIA assigns the notice number, for example, F011 AFMC A, where 'F' indicates 'Air Force,' the next number represents the series from AFMAN 37–139 regarding records disposition, and the final letter group shows the system manager's command or DCS. The last character 'A' indicates that this is the first notice for this series and system manager.

b. *System name.* Use a short, specific, plain-language title that identifies the system's general purpose (limited to 55 characters).

c. *System location.* Specify the address of the primary system and any decentralized elements, including automated data systems with a central computer facility and input or output terminals at separate locations. Use street address, 2–letter state abbreviations and 9–digit ZIP Codes. Spell out office names. Do not use office symbols.

d. *Categories of individuals covered by the system.* Use nontechnical, specific categories of individuals about whom the Air Force keeps records. Do not use categories like 'all Air Force personnel' unless they are actually true.

e. *Categories of records in the system.* Describe in clear, nontechnical terms, all categories of records in the system. List only documents actually kept in the system. Do not show source documents that are used to collect data and then destroyed. Do not list form numbers.

f. *Authority for maintenance of the system.* Cite the specific law or Executive Order that authorizes the program the records support. Cite the DoD directive or instruction or the Air Force or other instruction that authorizes the system of records. Always include titles with the citations.

Note: Executive Order 9397 authorizes using the Social Security Number (SSN). Include this authority whenever the SSN is used to retrieve records.

g. *Purpose(s).* Describe briefly and specifically what the Air Force does with the information collected.

h. *Routine uses of records maintained in the system including categories of users and the purpose of such uses.* The Blanket Routine Uses published in the Air Force Directory of System Notices apply to all system notices unless you indicate otherwise. Also list each specific agency or activity outside DoD to whom the records may be released and the purpose for such release.

i. *Policies and practices for storing, retrieving, accessing, retaining, and disposing of records in the system.*

j. *Storage.* State the medium in which the Air Force keeps the records, for example, in file folders, card files, microfiche, computer, and so on. Storage does not refer to the storage container.

k. *Retrievability.* State how the Air Force retrieves the records, for example, by name, SSN, or personal characteristics (such as fingerprints or voiceprints).

l. *Safeguards.* List the kinds of officials who have immediate access to the system. List those responsible for safeguarding the records. Identify the system safeguards, for example, storage in safes, vaults, locked cabinets or rooms, use of guards, visitor controls, personnel screening, computer systems software, and so on. Describe safeguards fully without compromising system security.

m. *Retention and disposal.* State how long AFMAN 37–139 requires the activity to maintain the record. Indicate when or if the records may be transferred to a Federal Records Center

and how long the record stays there. Specify when the Records Center sends the record to the National Archives or destroys it. Indicate how the records may be destroyed.

n. *System manager(s) and address.* List the title and duty address of the system manager. For decentralized systems, show the locations and the position or duty title of each category of officials responsible for any segment of the system.

o. *Notification procedure.* List the title and duty address of the official authorized to tell requesters if their records are in the system. Specify the information a requester must submit, for example., full name, military status, SSN, date of birth, or proof of identity, and so on.

p. *Record access procedures.* Explain how individuals may arrange to access their records. Include the titles or categories of officials who may assist, for example, the system manager.

q. *Contesting records procedures.* SAF/AAIA provides this standard caption.

r. *Record source categories.* Show categories of individuals or other information sources for the system. Do not list confidential sources protected by subsections (k)(2), (k)(5), or (k)(7) of the Act.

s. *Exemptions claimed for the system.* When a system has no approved exemption, write 'none' under this heading. Specifically list any approved exemption including the subsection in the Act.

Appendix C to part 806b - General and Specific Exemptions

(a) *General exemption.* The following systems of records are exempt under 5 U.S.C. 552a(j)(2):

(1) *System identifier and name:* F124 AF A, Counter Intelligence Operations and Collection Records.

(2) *System identifier and name:* F124 AF C, Criminal Records.

(3) *System identifier and name:* F125 AF SP E, Security Police Automated System (SPAS).

(4) *System identifier and name:* F124 AF D, Investigative Support Records.

(5) *System identifier and name:* F125 AF A, Correction and Rehabilitation Records.

Exemption–Portions of this system that fall within 5 U.S.C.552a(j)(2) are exempt from the following provisions of 5 U.S.C. 552a, Sections (c)(3) and (c)(4); (d)(1) through (d)(5); (e)(2) and (e)(3); (e)(4)(G) and (e)(4)(H), (e)(5); (f)(1) through (f)(5); (g)(1) through (g)(5); and (h) of the Act.

Authority–5 U.S.C. 552a(j)(2).

Reason–The general exemption will protect ongoing investigations and protect from access criminal investigation information contained in this record system so as not to jeopardize any subsequent judicial or administrative process taken as a result of information contained in the files.

(b) *Specific exemptions.* The following systems of records are subject to the specific exemptions shown:

(1) *Classified records.*

(i) All records in any systems of records that are properly classified according to Executive Orders 11652, 12065 or 12356, are exempt from 5 U.S.C. 552a(c)(3); (d); (e)(4)(G), (H), and (I); and (f), regardless of whether the entire system is otherwise exempt or not.

(ii) *Authority.* 5 U.S.C. 552a(k)(1).

(2)*System identifier and name:* F053 AFA C, Admissions and Registrar Records.

(i) *Exemption.* Parts of this system of records (Liaison Officer Evaluation and Selection Panel Candidate Evaluation) are exempt from 5 U.S.C. 552a(d), (e)(4)(H), and (f), but only to the extent that disclosure would reveal the identity of a confidential source.

(ii) *Authority.* 5 U.S.C. 552a(k)(5).

(iii) *Reasons.* To ensure the frankness of information used to determine whether cadets are qualified for graduation and commissioning as officers in the Air Force.

(3) *System identifier and name:* F035 MPC R, Air Force Personnel Test 851, Test Answer Cards.

(i) *Exemption.* This system is exempt from 5 U.S.C. 552a(c)(3); (d); (e)(4) (G), (H), and (I); and (f).

(ii) *Authority.* 5 U.S.C. 552a(k)(6).

(iii) *Reasons.* To protect the objectivity of the promotion testing system by keeping the test questions and answers in confidence.

(4) *System identifier and name:* F035 AFA A, Cadet Personnel Management System.

(i) *Exemption.* Parts of this system are exempt from 5 U.S.C. 552a(d), (e)(4)(H), and (f), but only insofar as disclosure would reveal the identity of a confidential source.

(ii) *Authority.* 5 U.S.C. 552a(k)(7).

(iii) *Reasons.* To maintain the candor and integrity of comments needed to evaluate an Air Force Academy cadet for commissioning in the Air Force.

(5) *System identifier and name:* F045 AETC C, Cadet Records.

(i) *Exemption.* Portions of this system (Detachment Professional Officer Course (POC) Selection Rating Sheets; Air Force Reserve Officer Training Corps (AFROTC) Form 0–24–Disenrollment Review; Memoranda for Record and Staff Papers with Staff Advice, Opinions, or Suggestions) are exempt from 5 U.S.C. 552a(c)(3); (d); (e)(4)(G) and (H), and (f), but only to the extent that disclosure would reveal the identity of a confidential source.

(ii) *Authority.* 5 U.S.C. 552a(k)(5).

(iii) *Reasons.* To protect the identity of a confidential source who furnishes information necessary to make determinations about the qualifications, eligibility, and suitability of cadets for graduation and commissioning in the Air Force.

(6) *System identifier and name:* F168 AF SG B, Family Advocacy Program Record.

(i) *Exemption.* Parts of this system are exempt from 5 U.S.C. 552a(c)(3) and (d), but only to the extent that disclosure would reveal the identity of a confidential source.

(ii) *Authority.* 5 U.S.C. 552a(k)(2) and (k)(5).

(iii) *Reasons.* To encourage those who know of exceptional medical or educational conditions or family maltreatments to come forward by protecting their identities, and the integrity of ongoing and civil law investigations of criminal and civil law violations. Giving subjects access to their files could result in them concealing, altering, or fabricating evidence could hamper the identification of offenders and alleged offenders; and could jeopardize the safety and well–being of the family.

(7) *System identifier and name:* F035 AF MP A, Effectiveness/Performance Reporting System.

(i) *Exemptions*–Brigadier General Selectee Effectiveness Reports and Colonel and Lieutenant Colonel Promotion Recommendations with close out dates on or before January 31, 1991, may be exempt from subsections of 5 U.S.C. 552a(c)(3); (d); (e)(4)(H); and (f).

(ii) *Authority*–5 U.S.C. 552a(k)(7).

(iii) *Reasons*–Subsection (c)(3) because making the disclosure accounting available to the individual may compromise express promises of confidentiality by revealing details about the report and identify other record sources, which may result in circumvention of the access exemption.

Subsection (d) because individual disclosure compromises express promises of confidentiality conferred to protect the integrity of the promotion rating system.

Subsection (e)(4)(H) because of and to the extent that portions of this record system are exempt from the individual access provisions of subsection (d).

Subsection (f) because of and to the extent that portions of this record

system are exempt from the individual access provisions of subsection (d).

(8) *System identifier and name:* F030 AF LE A, Equal Opportunity in Off Base-Housing.

(i) *Exemption.* This system is exempt from 5 U.S.C. 552a(c)(3); (d); (e)(4) (G), (H), and (I); and (f).

(ii) *Authority.* 5 U.S.C. 552a(k)(2).

(iii) *Reasons.* To enforce civil laws, court orders, and the activities of the Departments of Housing and Urban Development and Justice.

(9) *System identifier and name:* F035 AP A, Files on General Officers and Colonels Assigned to General Officer Positions.

(i) *Exemption.* This system is exempt from 5 U.S.C. 552a(c)(3); (d); (e)(4)(G), (H), and (I); and (f), but only to the extent that disclosure would reveal the identity of a confidential source.

(ii) *Authority.* 5 U.S.C. 552a(k)(7).

(iii) *Reasons.* To protect the integrity of information used in the Reserve Initial Brigadier General Screening Board, the release of which would compromise the selection process.

(10) *System identification and name:* F035 AF MP P, General Officer Personnel Data System.

(i) *Exemption*–Air Force General Officer Promotion and Effectiveness Reports with close out dates on or before January 31, 1991, may be exempt from subsections of 5 U.S.C. 552a(c)(3); (d); (e)(4)(H); and (f).

(ii) *Authority*–5 U.S.C. 552a(k)(7).

(iii) *Reason*–Subsection (c)(3) because making the disclosure accounting available to the individual may compromise express promises of confidentiality by revealing details about the report and identify other record sources, which may result in circumvention of the access exemption.

Subsection (d) because individual disclosure compromises express promises of confidentiality conferred to protect the integrity of the promotion rating system.

Subsection (e)(4)(H) because of and to the extent that portions of this record system are exempt from the individual access provisions of subsection (d).

Subsection (f) because of and to the extent that portions of this record system are exempt from the individual access provisions of subsection (d).

(11) *System identifier and name:* F035 MPC L, Historical Airman Promotion Master Test File.

(i) *Exemption.* This system is exempt from 5 U.S.C. 552a(c)(3); (d); (e)(4) (G), (H), and (I); and (f).

(ii) *Authority.* 5 U.S.C. 552a(k)(6).

(iii) *Reasons.* To protect the integrity, objectivity, and equity of the promotion testing system by keeping test questions and answers in confidence.

(12) *System identifier and name:* F120 AF IG B, Inspector General Records.

(i) *Exemption.* This system is exempt from 5 U.S.C. 552a(c)(3); (d); (e)(4) (G), (H), and (I); and (f). However, if a person is denied any right, privilege, or benefit, he or she would otherwise be entitled to as a result of keeping this material, it must be released, unless doing so would reveal the identity of a confidential source.

(ii) *Authority.* 5 U.S.C. 552a(k)(2).

(iii) *Reasons.* Granting individuals access to information collected while an Inspector General inquiry is in progress could interfere with the just, thorough, and timely resolution of the complaint or inquiry and could possibly enable individuals to conceal wrong doing or mislead the inquiring officer. Disclosure might also subject sources, witnesses, and their families to harassment or intimidation.

(13) *System identifier and name:* F124 AFOSI B, Investigative Applicant Processing Records.

(i) *Exemption.* This system is exempt from 5 U.S.C. 552a(c)(3); (d); (e)(4) (G), (H), and (I); and (f), but only to the extent that disclosure would reveal the identity of a confidential source.

(ii) *Authority.* 5 U.S.C. 552a(k)(5).

(iii) *Reasons.* To protect those who gave information in confidence during Air Force Office of Special Investigations (AFOSI) applicant inquiries. Fear of harassment could cause sources not to make frank and open responses about applicant qualifications. This could compromise the integrity of the AFOSI personnel program that relies on selecting only qualified people.

(14) *System identifier and name:* F035 AFB B, Master Cadet Personnel Record (Active/Historical).

(i) *Exemptions.* Parts of these systems are exempt from 5 U.S.C. 552a(d), (e)(4)(H), and (f), but only to the extent that they would reveal the identity of a confidential source.

(ii) *Authority.* 5 U.S.C. 552a(k)(7).

(iii) *Reasons.* To maintain the candor and integrity of comments needed to evaluate a cadet for commissioning in the Air Force.

(15) *System identifier and name:* F205 AFISA A, Sensitive Compartmented Information Personnel Records.

(i) *Exemption.* This system is exempt from 5 U.S.C. 552a(a)(3); (d); (e)(4) (G), (H), and (I); and (f), but only to the extent that disclosure would reveal the identity of a confidential source.

(ii) *Authority.* 5 U.S.C. 552a(k)(2) and (k)(5).

(iii) *Reasons.* To protect the identity of sources to whom proper promises of confidentiality have been made during investigations. Without these promises, sources will often be unwilling to provide information essential in adjudicating access in a fair and impartial manner.

(16) *F124 AFA, Security and Related Investigative Records.*

(i) *Exemption.* This system is exempt from 5 U.S.C. 552a(c)(3); (d); (e)(4) (G), (H), and (I); and (f), but only to the extent that disclosure would reveal the identity of a confidential source.

(ii) *Authority.* 5 U.S.C. 552a(k)(5).

(iii) *Reasons.* To protect the identity of those who give information in confidence for personnel security and related investigations. Fear of harassment could cause sources to refuse to give this information in the frank and open way needed to pinpoint those areas in an investigation that should be expanded to resolve charges of questionable conduct.

(17) *System identifier and name:* F205 AFSCO A, Special Security Case Files.

(i) *Exemption.* This system is exempt from 5 U.S.C. 552a(c)(3); (d), (e)(4) (G), (H), and (I); and (f), but only to the extent that disclosure would reveal the identity of a confidential source.

(ii) *Authority.* 5 U.S.C. 552a(k)(5).

(iii) *Reasons.* To protect the identity of those who give information in confidence for personnel security and related investigations. Fear of harassment could cause sources to refuse to give this information in the frank and open way needed to pinpoint those areas in an investigation that should be expanded to resolve charges of questionable conduct.

(18) *System identifier and name:* F205 AF SP A, Special Security Files.

(i) *Exemption.* This system is exempt from 5 U.S.C. 552a(c)(3); (d); (e)(4) (G), (H), and (I); and (f), but only to the extent that disclosure would reveal the identity of a confidential source.

(ii) *Authority.* 5 U.S.C. 552a(k)(5).

(ii) *Reasons.* To protect the identity of those who give information in confidence for personnel security and related investigations. Fear of harassment could cause them to refuse to give this information in the frank and open way needed to pinpoint areas in an investigation that should be expanded to resolve charges of questionable conduct.

(19) *System identifier and name:* F035 AF MP R, Applications for Appointment and Extended Active Duty Files.

(i) *Exemption.* Parts of this system of records are exempt from 5 U.S.C. 552a(d), but only to the extent that

disclosure would reveal the identity of a confidential source.

(ii) *Authority.*5 U.S.C. 552a(k)(5).

(iii)*Reasons.* To protect the identity of confidential sources who furnish information necessary to make determinations about the qualifications, eligibility, and suitability of health care professionals who apply for Reserve of the Air Force appointment or interservice transfer to the Air Force.

Dated: October 14, 1994.

L. M. Bynum,

Alternate OSD Federal Register Liaison Officer, Department of Defense.

[FR Doc. 94–26085 Filed 10–20–94; 8:45 am]

BILLING CODE 5000–04–F

ENVIRONMENTAL PROTECTION AGENCY

40 CFR Part 63

[AD–FRL–5094–7]

RIN 2060–AF07

National Emission Standards for Hazardous Air Pollutants for Source Categories: Early Reductions Program High-Risk List Amendment

AGENCY: Environmental Protection Agency (EPA).

ACTION: Final rule.

SUMMARY: On December 29, 1992, the EPA promulgated final regulations implementing the Early Reductions Program under section 112(i)(5) of the Clean Air Act, as amended (CAA). As part of that rulemaking, EPA designated a list of high-risk hazardous air pollutants and limited the use of offsetting reductions in other hazardous air pollutants as counting towards the required reductions in high-risk pollutants. An amendment to the high-risk list which would delete acrylic acid because of EPA's analysis of new toxicological data was proposed in the **Federal Register** on June 22, 1994. This final action promulgates this amendment and deletes acrylic acid from the list of high-risk pollutants as designated by the Early Reductions Program.

This final action also removes methylene diphenyl diisocyanate (MDI) (CAS No. 101688) from the list of high-risk pollutants. The EPA's listing of MDI as a high-risk pollutant was vacated by the United States Court of Appeals for the District of Columbia Circuit on July 19, 1994.

DATES: *Effective Date.* October 21, 1994.

Judicial Review. Under section 307(b)(1) of the CAA, judicial review of the actions taken by this final rule is available only by the filing of a petition for review in the U.S. District Court of Appeals for the District of Columbia Circuit within 60 days of publication of this rule. Under section 307(b)(2) of the CAA, the requirements that are the subject of this action may not be challenged later in civil or criminal proceedings brought by the EPA to enforce these requirements.

ADDRESSES: *Docket.* Docket No. A–94–29, containing supporting information used in developing the promulgated standards, is available for public inspection and copying between 8:30 a.m. and 3:30 p.m., Monday through Friday, at EPA's Air Docket Section, Waterside Mall, room 1500, 1st floor, 401 M Street, SW., Washington, DC 20460. A reasonable fee may be charged for copying.

FOR FURTHER INFORMATION CONTACT: Ms. Martha H. Keating, Emission Standards Division (MD–13), U.S. Environmental Protection Agency, Research Triangle Park, North Carolina 27711, (919) 541–5340.

SUPPLEMENTARY INFORMATION: The information presented in this preamble is organized as follows:

I. Significant Comments and Summary of the Final Rule
II. Removal of MDI From the High-Risk List
III. Administrative Requirements

I. Significant Comments and Summary of the Final Rule

Based on comments received during the comment period, the EPA is deleting acrylic acid (CAS. No. 79107) from the list of high-risk pollutants, as proposed. Three commenters submitted letters supporting EPA's proposal, with all commenters agreeing that acrylic acid does not meet the EPA's criteria for listing acrylic acid as a high-risk pollutant under the Early Reductions Program. As the commenters appropriately pointed out, the EPA did not propose to revise the criteria for including a pollutant on the high-risk list. Therefore, the recent revision of the inhalation reference concentration (RfC) for acrylic acid (April 1, 1994) is sufficient grounds to delete acrylic acid from the list.

One commenter addressed issues pertinent to EPA's use of the Integrated Risk Information System (IRIS). With respect to acrylic acid, the commenter commended the EPA for considering additional data that was not previously available when the RfC for acrylic acid was first included in the IRIS data base. The commenter's specific comments however, dealt with the EPA's use of IRIS values for cresol isomers in the context of two other proposed rulemakings. Because this issue is not pertinent to this action, these comments are not addressed here. The commenter has also submitted them to EPA in response to a request for public comment on two other proposed rulemakings that deal with cresol isomers and the EPA will consider and respond to them at the time those proposals are finalized.

II. Removal of MDI From the High-Risk List

On July 19, 1994, the United States Court of Appeals for the D.C. Circuit vacated EPA's designation of MDI as a high-risk pollutant for purposes of the Early Reductions Program [Chemical Manufacturers Association (CMA) v. EPA, No. 93–1178 (D.C. Cir.)]. The court found that EPA was arbitrary and capricious in not adequately addressing CMA's contentions that MDI was substantially different than the characteristics of the model pollutant used in the generic modeling exercise to screen the 189 hazardous air pollutants for inclusion on the high-risk list. In addition, the court found that it was arbitrary for EPA to include MDI on the list of high risk pollutants without identifying any serious health effect with which it had ever been associated.

Therefore, this final rule deletes MDI from the list of high-risk pollutants for the purposes of the Early Reductions Program in accordance with the court's decision.

III. Administrative Requirements

A. Docket

The docket is an organized and complete file of all the information submitted to or otherwise considered by EPA in the development of this rulemaking. The principal purposes of the docket are: (1) To allow interested parties to readily identify and locate documents so they can intelligently and effectively participate in the rulemaking process; and (2) to serve as the record in case of judicial review (except for interagency review materials [section 307(d)(7)(A)]).

B. Paperwork Reduction Act

There are no information collection requirements associated with this proposed rule. Therefore, an Information Collection Request document has not been prepared.

C. Executive Order 12866 Review

Under Executive Order 12866 (FR 51735 (October 4, 1993)), EPA must determine whether a regulation is "significant" and therefore subject to review by the Office of Management and

Budget (OMB), and the requirements of the Executive Order. The order defines "significant regulatory action" as one that is likely to result in a rule that may:

(1) Have an annual affect on the economy of $100 million or more or adversely affect in a material way the economy, a sector of the economy, productivity, competition, jobs, the environment, public health or safety, or State, local, or tribal governments or communities;

(2) Create a serious inconsistency or otherwise interfere with an action taken or planned by another agency;

(3) Materially alter the budgetary impact of entitlement, grants, user fees, or loan programs, or the rights and obligations of recipients thereof; or

(4) Raise novel legal or policy issues arising out of legal mandates, the President's priorities, or the principles set forth in the Executive Order.

Pursuant to the terms of Executive Order 12866, it has been determined that this rule is a "non significant regulatory action". Accordingly, a regulatory impact analysis has not been prepared and EPA has not submitted the action to OMB for review.

D. Compliance With Regulatory Flexibility Act

Under section 605 of the Regulatory Flexibility Act of 1980, 5 U.S.C. 601 *et seq.*, federal agencies are required to assess the economic impact of federal regulations on small entities. Pursuant to the provisions of 5 U.S.C. 605(b), I hereby certify that this rule will not have a significant economic impact on a substantial number of small business entities because the impact of this rule is not significant.

List of Subjects in 40 CFR Part 63

Air pollution control, Early emission reductions, Hazardous air pollutants, Compliance extensions, Sources.

Dated: October 13, 1994.

Carol M. Browner,

Administrator.

For the reasons set out in the preamble, 40 CFR part 63 is amended as follows:

PART 63—[AMENDED]

1. The authority citation for part 63 continues to read as follows:

Authority: 42 U.S.C. 7401 et seq.

§ 63.74 [Amended]

2. In § 63.74 Table 1 entitled "List of High Risk Pollutants", the entry for "acrylic acid" (CAS No. 79107) is removed.

3. In § 63.74 Table 1 entitled "List of High Risk Pollutants", the entry for "methylene diphenyl diisocyanate (MDI)" (CAS No. 101688) is removed.

[FR Doc. 94–26196 Filed 10–20–94; 8:45 am]

BILLING CODE 6560–50–P

FEDERAL EMERGENCY MANAGEMENT AGENCY

44 CFR Part 64

[Docket No. FEMA–7602]

List of Communities Eligible for the Sale of Flood Insurance

AGENCY: Federal Emergency Management Agency (FEMA).

ACTION: Final rule.

SUMMARY: This rule identifies communities participating in the National Flood Insurance Program (NFIP). These communities have applied to the program and have agreed to enact certain floodplain management measures. The communities' participation in the program authorizes the sale of flood insurance to owners of property located in the communities listed.

EFFECTIVE DATES: The dates listed in the third column of the table.

ADDRESSES: Flood insurance policies for property located in the communities listed can be obtained from any licensed property insurance agent or broker serving the eligible community, or from the NFIP at: Post Office Box 6464, Rockville, MD 20849, (800) 638–6620.

FOR FURTHER INFORMATION CONTACT: Robert F. Shea, Jr., Division Director, Program Implementation Division, Mitigation Directorate, 500 C Street, SW., room 417, Washington, DC 20472, (202) 646–3619.

SUPPLEMENTARY INFORMATION: The NFIP enables property owners to purchase flood insurance which is generally not otherwise available. In return, communities agree to adopt and administer local floodplain management measures aimed at protecting lives and new construction from future flooding. Since the communities on the attached list have recently entered the NFIP, subsidized flood insurance is now available for property in the community.

In addition, the Director of the FEMA has identified the special flood hazard areas in some of these communities by publishing a Flood Hazard Boundary Map (FHBM) or Flood Insurance Rate Map (FIRM). The date of the flood map, if one has been published, is indicated in the fourth column of the table. In the communities listed where a flood map has been published, Section 102 of the Flood Disaster Protection Act of 1973, as amended, 42 U.S.C. 4012(a), requires the purchase of flood insurance as a condition of Federal or federally related financial assistance for acquisition or construction of buildings in the special flood hazard areas shown on the map.

The Director finds that the delayed effective dates would be contrary to the public interest. The Director also finds that notice and public procedure under 5 U.S.C. 553(b) are impracticable and unnecessary.

National Environmental Policy Act

This rule is categorically excluded from the requirements of 44 CFR Part 10, Environmental Considerations. No environmental impact assessment has been prepared.

Regulatory Flexibility Act

The Associate Director certifies that this rule will not have a significant economic impact on a substantial number of small entities in accordance with the Regulatory Flexibility Act, 5 U. S. C. 601 *et seq.*, because the rule creates no additional burden, but lists those communities eligible for the sale of flood insurance.

Regulatory Classification

This final rule is not a significant regulatory action under the criteria of section 3(f) of Executive Order 12866 of September 30, 1993, Regulatory Planning and Review, 58 FR 51735.

Paperwork Reduction Act

This rule does not involve any collection of information for purposes of the Paperwork Reduction Act, 44 U.S.C. 3501 et seq.

Executive Order 12612, Federalism

This rule involves no policies that have federalism implications under Executive Order 12612, Federalism, October 26, 1987, 3 CFR, 1987 Comp., p. 252.

Executive Order 12778, Civil Justice Reform

This rule meets the applicable standards of section 2(b)(2) of Executive Order 12778, October 25, 1991, 56 FR 55195, 3 CFR, 1991 Comp., p. 309.

List of Subjects in 44 CFR Part 64

Flood insurance, Floodplains.

Accordingly, 44 CFR part 64 is amended as follows:

PART 64—[AMENDED]

1. The authority citation for Part 64 continues to read as follows:

Authority: 42 U.S.C. 4001 *et seq.*, Reorganization Plan No. 3 of 1978, 3 CFR,

1978 Comp., p. 329; E.O. 12127, 44 FR 19367, 3 CFR, 1979 Comp., p. 376.

§ 64.6 [Amended]

2. The tables published under the authority of § 64.6 are amended as follows:

State/Location	Community No.	Effective date of authorization/cancellation of sale of flood insurance in community	Current effective map date
NEW ELIGIBLES—EMERGENCY PROGRAM			
Illinois: Ogden, village of, Champaign County	170030	Aug. 2, 1994	
New Mexico: Chama, village of, Rio Arriba County	350050	Aug. 2, 1994	12–12–75
Virginia: Washington, town of, Rappahannock County	510288	Aug. 11, 1994	2–4–77
Georgia: Forsyth, city of, Monroe County	130359	Aug. 12, 1994	4–11–75
Iowa: Dayton, city of, Webster County	190565	Aug. 19, 1994	11–5–76
Georgia: Baker County, unincorporated areas	130270	Aug. 18, 1994	3–28–75
Michigan:			
Waverly, township of, Cheboygan County	260678	Aug. 29, 1994	
Polkton, charter township of, Ottawa County	260923	Aug. 31, 1994	
New York: Kiryas Joel, village of, Orange County	361610	Aug. 31, 1994	11–1–84
Georgia: Twiggs County, unincorporated areas	130406	Sept 8, 1994	
Maine: Orrington, town of, Penobscot County	230180	Sept 20, 1994	2–7–75
Oklahoma: Kiowa County, unincorporated areas	400543	.....do	
Georgia:			
Alamo, city of, Wheeler County	130507	Sept. 22, 1994	
Macon County, unincorporated areas	130506	.....do	
Dawson, city of, Terrell County	130509	Sept. 27, 1994	
Jeffersonville, city of, Twiggs County	130508	.....do	
NEW ELIGIBLES—REGULAR PROGRAM			
California:			
Mammoth Lakes, town of, Mono County	060724	Aug. 2, 1994	9–30–92
Lake Forest, city of, Orange County [1]	060759	Sept. 15, 1994	
Iowa: Tripoli, city of, Bremer county	190669	Sept. 28, 1994	7–16–90
Illinois: West Peoria, city of, Peoria County [2]	171034	Sept. 29, 1994	
REINSTATEMENTS—REGULAR PROGRAM			
New York:			
Grove, town of, Allegany County	361005	Nov. 26, 1976, Emerg; July 9, 1982, Reg; Nov. 4, 1992, Susp; Aug. 2, 1994, Rein.	11–6–91
Oneida Castle, village of, Oneida County	361526	June 1, 1983, Emerg; Sept. 15, 1983, Reg; Nov. 4, 1992, Susp; Aug. 2, 1994, Rein.	7–4–89
Stafford, town of, Genesee County	361118	Mar. 1, 1977, Emerg; July 16, 1982, Reg; Nov. 4, 1992, Susp; Aug. 2, 1994, Rein.	7–16–82
Cuyler, town of, Cortland County	361386	June 6, 1977, Emerg; May 15, 1985, Reg; May 15, 1985, Susp; Aug. 2, 1994, Rein.	5–15–85
De Ruyter, town of, Madison County	361291	Dec. 22, 1975, Emerg;. June 8, 1984, Reg; May 17, 1988, Susp; Aug. 2, 1994, Rein.	6–8–84
Mississippi: Smith County, unincorporated areas	280306	June 8, 1990, Emerg; July 1, 1991, Reg; Dec. 3, 1993, Susp; Aug. 2, 1994, Rein.	12–3–93
Florida: Malone, town of, Jackson County	120623	Oct. 30, 1984, Emerg; Dec. 15, 1990, Reg; Dec. 15, 1990, Susp; Aug. 16, 1994, Rein.	12–15–90
Ohio: Kipton, village of, Lorain County	390743	Apr. 21, 1978, Emerg; Sept 22, 1978, Reg; July 4, 1989, Susp; Aug. 29, 1994, Rein.	9–22–78
Virginia: Bluefield, town of, Tazewell County	510161	July 30, 1973, Emerg; July 17, 1978, Reg; Aug. 2, 1994, Susp; Aug. 30, 1994, Rein.	8–2–94
Pennsylvania: Wind Gap, Borough of, Northampton County.	420734	Nov. 14, 1975, Emerg; May 19, 1981, Reg; May 16, 1994, Susp; Aug. 31, 1994, Rein.	5–16–94
Ohio: Higginsport, village of, Brown County	390677	Jan. 29, 1976, Emerg; Sept. 15, 1993, Reg; Aug. 16, 1994, Susp; Sept 8, 1994, Rein.	9–15–83
New York: Angelica, town of, Allegany County	361095	Mar. 10, 1982 Emerg; Dec. 31, 1982, Reg; Nov. 4, 1992, Susp; Sept 20, 1994, Rein.	12–31–82
REGULAR PROGRAM CONVERSIONS			
Region II			
New York: Turin, town of, Lewis County	360376	Aug. 2, 1994 Suspension withdrawn	8–2–94
Region III			
Pennsylvania: Union, township of, Huntingdon County	421704	.....do	Do.
Virginia:			
Tazewell County, unincorporated areas	510160	.....do	Do.
Wise County, unincorporated areas	510174	.....do	Do.
Region II			
New York: Trenton, town of, Oneida County	360556	Aug. 16, 1994 Suspension withdrawn	8–16–94

State/Location	Community No.	Effective date of authorization/cancellation of sale of flood insurance in community	Current effective map date
Region III			
Maryland:			
Deer Park, town of, Garrett County	240102	do	Do.
Garrett County, unincorporated areas	240034	do	Do.
Mountain Lake Park, town of, Garrett County	240038	do	Do.
Region V			
Minnesota: Paynesville, city of, Stearns County	270452	do	Do.
Ohio: Sebring, village of, Mahoning County	390371	do	Do.
Wisconsin: Winneconne, village of, Winnebago County	550512	do	Do.
Region VIII			
Utah:			
Farmington, city of, Davis County	490044	do	Do.
Davis County, unincorporated areas	490038	do	Do.
Region IV			
Florida: Orange City, city of, Volusia County	120633	Sept. 2, 1994 Suspension withdrawn	9–2–94
Region V			
Ohio: Batavia, village of, Clermont County	390066	do	9–2–94
Wisconsin: Pierce County, unincorporated areas	555571	do	9–2–94
Region II			
New Jersey: Byram, township of, Sussex County	340557	Sept. 15, 1994 Suspension withdrawn	9–15–94
Region IV			
Kentucky:			
Bourbon County, unincorporated areas	210271	do	7–16–81
Johnson County, unincorporated areas	210339	do	5–4–88
Monterey, city of, Owen County	210295	do	8–5–86
Russell, city of, Greenup County	210090	do	1–19–83
Illinois:			
Morris, city of, Grundy County	170263	do	9–15–94
Mundelein, village of, Lake County	170382	do	9–15–94
Region VI			
Texas:			
Jacksonville, city of, Cherokee County	480123	Sept. 30, 1994 Suspension withdrawn	9–30–94
North Lake, town of, Denton County	480782	do	Do.
Region VIII			
Utah:			
Bluffdale, city of, Salt Lake County	490247	do	Do.
Draper, city of, Salt Lake County	490244	do	Do.
Midvale, city of, Salt Lake County	490211	do	Do.
Murray, city of, Salt Lake County	490103	do	Do.
Riverton, city of, Salt Lake County	490104	do	Do.
Sandy City, city of, Salt Lake County	490106	do	Do.
South Salt Lake, city of, Salt Lake County	490219	do	Do.
South Jordan, city of, Salt Lake County	490107	do	Do.
West Valley City, city of, Salt Lake County	490245	do	Do.
West Jordan, city of, Salt Lake County	490108	do	Do
Region IX			
Nevada:			
Reno, city of, Washoe County	320020	do	Do.
Sparks, city of, Washoe County	320021	do	Do.
Region X			
Washington:			
Burien, city of, King County	530321	do	Do.
King County, unincorporated areas	530071	do	Do.
Normandy Park, city of, King County	530084	do	Do.
Seatac, city of, King County	530320	do	Do.

[1] The City of Lake Forest, has adopted Orange County's Flood Insurance Rate Map (FIRM) and Study for floodplain management and insurance purposes.

[2] The City of West Peoria has adopted Peoria County's Flood Insurance Rate Map (FIRM) for floodplain management and flood insurance purposes.

Code for reading third column: Emerg.—Emergency; Reg.—Regular; Susp.—Suspension; Rein.—Reinstatement.

(Catalog of Federal Domestic Assistance No. 83.100, "Flood Insurance.")

Issued: October 13, 1994.

Frank H. Thomas,

Deputy Associate Director, Mitigation Directorate.

[FR Doc. 94–26171 Filed 10–20–94; 8:45 am]

BILLING CODE 6718–21–P

FEDERAL COMMUNICATIONS COMMISSION

47 CFR Part 76

[MM Docket No. 92–266, FCC 94–254]

Cable Television Act of 1992

AGENCY: Federal Communications Commission.

ACTION: Final rule.

SUMMARY: The Commission has adopted a Fourth Order on Reconsideration to revise and adopt further Commission cable rate regulations. The Fourth Order on Reconsideration addresses issues regarding external cost treatment of Commission cable television system regulatory fees and franchise fees. It is intended to provide for external cost treatment of Commission cable television system regulatory fees and permit cable operators to adjust rates for regulated cable services to reflect Commission regulatory fees and changes in franchise fees upon 30 days' notice without receiving prior franchising authority or Commission approval, but subject to refund.

EFFECTIVE DATE: November 21, 1994.

FOR FURTHER INFORMATION CONTACT: Leora Hochstein, (202) 416–0800.

SUPPLEMENTARY INFORMATION: This is a synopsis of the Fourth Order on Reconsideration in MM Docket No. 92–266, FCC 94–254, adopted September 30, 1994 and released October 5, 1994.

The complete text of this Fourth Order on Reconsideration is available for inspection and copying during normal business hours in the FCC Reference Center (room 239), 1919 M Street, N.W., Washington, D.C., and also may be purchased from the Commission's copy contractor, International Transcription service at (202) 857–3800, 2100 M Street, N.W., Suite 140, Washington, D.C. 20037.

Synopsis of the Fourth Order on Reconsideration

I. Franchise Fees

1. Cable systems are franchised by state or local governments or by a combination thereof or, in certain circumstances, by other governmental entities such as federal military installations. The payment of fees under the terms of any franchise is authorized by Section 622(a) of the Communications Act, is limited as to amount by Section 622(b), and such fees are to be accounted for in the establishment of rates under Section 623(b)(2)(c)(V).

2. Under the Commission's price cap rules, a cable operator is permitted to adjust its maximum monthly charge for regulated service tiers to reflect changes in certain categories of external costs, including franchise fees. If an operator's basic service tier is being regulated in a particular franchise area by the franchising authority or by the Commission, the operator generally is not allowed under our rules to increase its rates for the basic service tier or related equipment and installations without first submitting the proposed increase to the franchising authority or the Commission, as the case may be, for review. Under our rules, a franchising authority reviewing a proposed increase in basic rates has an initial 30 day period to make its decision. The franchising authority may extend this period for an additional 90 days in a non-cost-of-service case or 150 days in a cost-of-service case. During this period, the operator's proposed increase is not in effect. When the Commission is regulating basic rates, filings regarding rate increases must be made 30 days prior to the proposed effective date and such rate increases are effective on the date proposed unless the Commission issues an order deferring the effective date or denying the rate proposal. With respect to cable programming service (CPS) rates, an operator must file rate increases for prior review by the Commission if the Commission has ordered the operator to reduce its CPS rates within the prior 12 months or some other period specified by the Commission in a particular case. In addition, when a CPS complaint against the operator is pending before the Commission, an operator must give the Commission 30 days' notice of changes in any rates, including increases in rates attributable to increases in franchise fees.

3. On reconsideration, on our own motion, we determine that we should permit adjustments to capped rates to reflect increases in franchise fees without prior regulatory approval. Since it is the franchising authority which has set the franchise fee, prior regulatory review appears less necessary from a consumer protection standpoint than it is for other categories of external costs. This decision supersedes Answer No. 5 in the Questions and Answers released by the Cable Services Bureau on May 18, 1994 which interpreted the Commission's price cap rules as requiring prior approval before franchise fee increases could be passed through.

4. Accordingly, as of the effective date of this Order, where the franchising authority is regulating basic rates, increases in basic rates attributable to increases in franchise fees will not be subject to the prior approval requirements for proposed rates increases set forth in § 76.933(a)–(c) of our rules. However, operators will continue to be required to abide by the notice provisions of our rules. When the operator provides the notice to the franchising authority, it must also provide documentation that demonstrates that the rate increase has been properly calculated. We find it unnecessary to prescribe the precise form of this documentation. The operator need not use FCC Form 1210 since Form 1210 was not specifically designated for use in calculating rate adjustments that reflect changes in franchise fees.

5. As under existing rules, where the Commission is regulating basic service tier rates, operators must give the Commission 30 days' advance notice of any such increase attributable to franchise fee increases. Operators must also give subscribers and franchising authorities 30 days' advance notice of changes in basic rates attributable to increases in franchise fees as required by our rules. In addition, where the Commission is regulating basic service rates, the operator should submit with its filing to the Commission the same documentation which it would need to submit if the franchising authority were regulating basic service rates as outlined above.

6. The franchising authority or the Commission, as appropriate, may then review the pass-through of increases in franchise fees and may order a prospective rate reduction and refunds in accordance with our rules in the event the operator has increased its basic service rates by more than the increase in franchise fees properly allocable to the basic tier. The burden of demonstrating that any such increases are proper shall remain on the operator as with any other rate adjustments. The procedures set forth in § 76.933 of our rules will apply to a franchising authority review of rate increases resulting from franchise fee pass-throughs, except that the increased rate attributable to the increased franchise fee will be treated as an "existing rate" for the purposes of § 76.933. Thus, franchising authorities will have an initial 30-day period, beginning on the

date the operator provides notice and supporting documentation, whichever is later, to review the rates. The rate increase will go into effect at the end of this 30–day period. The franchising authority may extend the period for reviewing rates for an additional 90 days in a non-cost-of-service case or 150 days in a cost-of-service case by issuing a tolling order within the initial 30-day period. It may further extend its period for review by issuing an accounting order prior to the expiration of the 90 or 150 day additional period. See 47 CFR 76.933(a)–(c). However, during these periods the increased rate is in effect. The procedures set forth in § 76.945 will apply to Commission review of rate increases resulting from franchise fee pass-throughs.

7. Franchise fees will continue to be allocated in a manner that is most consistent with the assessment methodology used by franchising authorities. Under § 76.924(f) of our rules, a portion of franchise fees may, in some circumstances, be allocated to cable programming service tiers. Operators that have had cable programming service rates deemed unreasonable within the prior 12 months, or some other period specified by the Commission in a particular case, must submit increases in CPS rates attributable to an increase in franchise fees to the Commission for its review. Rate justifications relating to franchise fee-related increases in CPS tier rates will be reviewed by the Commission according to existing rules for Commission review of basic service tier rates.

8. These rule revisions do not change our rules governing rate adjustments attributable to decreases in external costs, including franchise fees. Decrease in franchise fees allocable to either the basic service or a CPS tier will continue to be treated as external cost decreases under our existing rules. Such decreases must be passed through to subscribers within the periods set forth in our rules for passing through decreases in external costs. The operator must provide 30 days' notice to subscribers, the local franchising authority and the Commission, as appropriate. As with franchise fee increases, operators must provide documentation for the amount of the decrease. Consistent with the rules adopted in the Report and Order and Further Notice of proposed Rulemaking, 8 FCC Rcd 5631 (1993) (Rate Order), 58 FR 29736, May 21, 1993, our action herein with respect to the pass-through of franchise fees applies only to the extent there are net increases in the costs imposed on the system operator. Fees may not be passed through to the extent there are other fee changes that offset the increase.

II. Cable Television System Regulatory Fees

9. Section 9 of the Communications Act of 1934, as amended, requires the Commission to collect cable system regulatory fees of $370 per 1,000 subscribers from cable television systems on an annual basis. 47 U.S.C. 159. The statute also permits the Commission to adjust the amount of the regulatory fees in subsequent years. The purpose of requiring cable systems to pay regulatory fees to the Commission is to permit the Commission to recover the annual cost of its various regulatory activities. In a Report and Order released June 8, 1994, in MD Docket No. 94–19, the Commission adopted implementing rules providing for the payment of regulatory fees in fiscal year 1994 and thereafter. Implementation of Section 9 of the Communications Act: Assessment and Collection of Regulatory Fees for the 1994 Fiscal Year, MD Docket No. 94–19, Report and Order, 59 FR 30984 (June 16, 1994). In that Report and Order, we decided to assess the cable system regulatory fee on an exact per subscriber basis (i.e., $0.37 per subscriber per year or approximately $0.03 per subscriber per month). We provided that regulatory fees be paid on this basis so that cable systems serving less than 1,000 subscribers would not pay a disproportionately high regulatory fee. The first cable system regulatory fee payments for fiscal year 1994 were due on August 12, 1994.

10. Cable operators in MD Docket No. 94–19 urged the Commission to permit cable systems to pass regulatory fees through to subscribers as external costs. In our Report and Order in that docket, we concluded that the pass-through issue was not within the scope of the docket and should, therefore, be addressed separately.

11. Cable television system regulatory fees are mandated by Congress, collected by the Commission, and are intended to reimburse the Commission for administering its regulatory responsibilities under the Communications Act of 1934. As such, they are exceptional, newly imposed, governmentally-assessed fees that further the purposes of the Communications Act. These fees are also beyond the control of the cable operator. Furthermore, the fees are easily measurable in amount. Consistent with the Commission's prior decision to determine on a case-by-case basis whether categories of costs should be accorded external cost treatment, we determine that Commission cable television system regulatory fees should be accorded external cost treatment under our price cap rules governing cable service rates.

12. We further determine that cable system regulatory fees should be directly assigned to the basic service tier. Direct assignment to the basic service tier is appropriate because the cable system regulatory fees are assessed on a per subscriber basis and all subscribers receive the basic service tier. Assignment to the basic service tier is also consistent with the fact that regulatory fees are intended to reimburse the Commission for the costs of regulating cable service, including Commission oversight of the basic service tier and other regulatory activities such as rulemaking, the direct regulation of some systems' basic tier rates and review of local franchising authorities' decisions.

13. We believe that cable operators should be permitted to adjust rates on account of the regulatory fees without prior regulatory approval, subject to our requirements for 30 days' advance notice. Thus, operators may adjust rates to reflect the newly imposed regulatory fees, and any subsequent increases in the fees, in the same manner that rates may be adjusted for increases in franchise fees, as discussed above. Decreases in Commission regulatory fees will continue to be treated as external cost decreases under our existing rules and must be passed through to subscribers in accordance with those rules. In addition, fees may not be passed through to the extent that there are other offsetting fee decreases.

14. Operators shall recover the annual regulatory fee according to the following schedule. Regulatory fees of $0.37 per subscriber that were due on August 12, 1994 and/or September 9, 1994 for fiscal year 1994 (October 1, 1993–September 30, 1994) shall be recovered from subscribers over a ten month period beginning in December of 1994 and ending in September of 1995. For the first three months of this ten month period (December 1994–February 1995), operators shall recover $0.03 per month per subscriber. For the remaining seven months (March 1995–September 1995), operators shall recover $0.04 per month per subscriber. Operators may provide notice of the entire fiscal year's regulatory fee pass-through in a single notice so long as that notice states that the fee pass-through will increase from $0.03 in February 1995 to $0.04 in March 1995. Regulatory fees that are assessed for subsequent fiscal years shall be recovered in twelve monthly installments during the fiscal year following the fiscal year for which the

payment was imposed. For example, operators may begin recovering regulatory fees paid for fiscal year 1995 during the 12 month period from October 1995 through September 1996. Payments shall be collected in equal monthly installments, except that for so many months as may be necessary to avoid fractional payments, an additional $0.01 payment per month may be collected. All such additional payments shall be collected in the last month or months of the fiscal year, so that once collections of such payments begin there shall be no month remaining in the year in which the operator is not entitled to such an additional payment. Recovery of regulatory fees paid for fiscal year 1995 and subsequent fiscal years is, of course, subject to the notice requirements contained in this Order and in our rules. We recognize that operators will not recover the regulatory fee until after they have paid it. However, operators may not assess interest on the amount charged to subscribers for regulatory fees in order to avoid the substantial administrative burdens on operators and regulators in determining and reviewing interest calculations.

15. The Report and Order released June 8, 1994, implementing regulatory fees on cable television systems, also provided that, for fiscal year 1994, each Cable Television Antenna Relay Service (CARS) licensee would be assessed a regulatory fee of $220 per license by the Commission. We decline to provide for the external cost treatment of CARS regulatory fees. CARS license regulatory fees are assessed on a flat fee basis of $220 per license and should not represent significant amounts to most operators. We will consider the need to permit external cost treatment of CARS regulatory fees for small systems upon completion of our cost studies.

III. Administrative Matters

Regulatory Flexibility Act Analysis

16. Pursuant to the Regulatory Flexibility Act of 1980, 5 U.S.C. 601–612, the Commission's final analysis with respect to the Fourth Order on Reconsideration is as follows:

17. Need and purpose of this action. The Commission, in compliance with Section 3 of the Cable Television Consumer Protection and Competition Act of 1992, 47 U.S.C. 543 (1992) pertaining to rate regulation, adopts revised rules and procedures intended to ensure cable subscribers of reasonable rates for cable services with minimum regulatory and administrative burden on cable entities.

18. Summary of issues raised by the public in response to the Initial Regulatory Flexibility Analysis. There were no comments submitted in response to the Initial Regulatory Flexibility Analysis. The Chief Counsel for Advocacy of the United States Small Business Administration (SBA) filed comments in the original rulemaking order. The Commission addressed the concerns raised by the Office of Advocacy in the Rate Order.

19. Significant alternatives considered and rejected. Petitioners representing cable interests and franchising authorities submitted several alternatives aimed at minimizing administrative burdens. The Commission responded to these comments in previous Orders in this docket. Although the Commission is issuing this Order on its own motion, the Commission has attempted to accommodate commenters' concerns and to reduce administrative burdens by providing an expedited method to pass through franchise fees and Commission regulatory fees.

IV. Ordering Clauses

20. Accordingly, it is ordered That, pursuant to Sections 4(i), 303(r), and 623 of the Communications Act of 1934, as amended, 47 U.S.C. 154(i), 303(r), and 543, that, §§ 76.922, 76.924, and 76.933 of the Commission's rules, 47 CFR 76.922, 76.924, and 76.933 are amended as set forth below.

21. It is further ordered That, this Fourth Order on Reconsideration is effective November 21, 1994.

List of Subjects in 47 CFR Part 76

Cable television.

Federal Communications Commission.

William F. Caton,

Acting Secretary.

Rule Changes

Part 76 of Chapter I of Title 47 of the Code of Federal Regulations is amended as follows:

PART 76—CABLE TELEVISION SERVICE

1. The authority citation for Part 76 continues to read as follows:

Authority: Secs. 2, 3, 4, 301, 303, 307, 308, 309, 48 Stat., as amended, 1064, 1065, 1066, 1081, 1082, 1083, 1084, 1085, 1101; 47 U.S.C. Secs. 152, 153, 154, 301, 303, 307, 308, 309, 532, 533, 535, 542, 543, 552, as amended, 106 Stat. 1460.

2. Section 76.922 is amended by adding paragraph (d)(3)(iv)(F) to read as follows:

§ 76.922 Rates for the basic service tier and cable programming services tiers.

* * * * *

(d) * * *

(3) * * *

(iv) * * *

(F) Commission cable television system regulatory fees imposed pursuant to 47 U.S.C. 159.

* * * * *

3. Section 76.924 is amended by redesignating paragraphs (f)(5) and (f)(6) as paragraphs (f)(6) and (f)(7) and adding a new paragraph (f)(5) to read as follows:

§ 76.924 Cost accounting and cost allocation requirements.

* * * * *

(f)(5) Commission cable television system regulatory fees imposed pursuant to 47 U.S.C. 159 shall be directly assigned to the basic service tier.

* * * * *

4. Section 76.933 is amended by adding paragraphs (e) and (f) to read as follows:

§ 76.933 Franchising authority review of basic cable rates and equipment costs.

* * * * *

(e) Notwithstanding paragraphs (a) through (d) of this section, when the franchising authority is regulating basic service tier rates, a cable operator may increase its rates for basic service to reflect the imposition of, or increase in, franchise fees or Commission cable television system regulatory fees imposed pursuant to 47 U.S.C. 159, upon 30 days' notice to subscribers and the franchising authority and, where required by § 76.958, to the Commission. For the purposes of paragraphs (a) through (c) of this section, the increased rate attributable to Commission regulatory fees or franchise fees shall be treated as an "existing rate," subject to subsequent review and refund if the franchising authority determines that the increase in basic tier rates exceeds the increase in regulatory fees or in franchise fees allocable to the basic tier. This determination shall be appealable to the Commission pursuant to § 76.944. When the Commission is regulating basic service tier rates pursuant to § 76.945 or cable programming service rates pursuant to § 76.960, an increase in those rates resulting from franchise fees or Commission regulatory fees shall be reviewed by the Commission pursuant to the mechanisms set forth in § 76.945. A cable operator must adjust its rates to reflect decreases in franchise fees or Commission regulatory fees within the

periods set forth in § 76.922(d)(3)(i) and (iii).

(f) Cable television system regulatory fees assessed by the Commission pursuant to 47 U.S.C. 159 shall be recovered in monthly installments during the fiscal year following the fiscal year for which the payment was imposed. Payments shall be collected in equal monthly installments, except that for so many months as may be necessary to avoid fractional payments, an additional $0.01 payment per month may be collected. All such additional payments shall be collected in the last month or months of the fiscal year, so that once collections of such payments begin there shall be no month remaining in the year in which the operator is not entitled to such an additional payment. Operators may not assess interest. Operators may provide notice of the entire fiscal year's regulatory fee pass-through in a single notice.

[FR Doc. 94–26255 Filed 10–20–94; 8:45 am]

BILLING CODE 6712–01–M

DEPARTMENT OF DEFENSE

48 CFR Parts 216, 242, and 252

Defense Federal Acquisition Regulation Supplement; Predetermined Indirect Cost Rates

AGENCY: Department of Defense (DoD).

ACTION: Final rule.

SUMMARY: The Department of Defense is revising the Defense FAR Supplement to implement revisions to OMB Circular A–21 (58 FR 39996) that permit predetermined indirect cost rates for educational institutions to be applicable for a period of up to four years.

EFFECTIVE DATE: October 18, 1994.

FOR FURTHER INFORMATION CONTACT: Mrs. Linda W. Neilson, (703) 604–5929.

SUPPLEMENTARY INFORMATION:

A. Background

On July 26, 1993, the Office of Management and Budget published revisions to OMB Circular A–21 (58 FR 39996) which include an increase in the period of time for which predetermined indirect cost rates for educational institutions may be applicable. Pending revision of the Federal Acquisition Regulation to conform the language to the revised OMB Circular, the Defense FAR Supplement is amended to permit use of predetermined indirect cost rates for educational institutions for periods of up to four years.

The Director, Defense Procurement, issued this final DFARS rule by Departmental Letter 94–018, October 18, 1994, to expedite DoD implementation of this revision.

B. Regulatory Flexibility Act

DoD certifies that this rule will not have a significant economic impact on a substantial number of small entities within the meaning of the Regulatory Flexibility Act because the rule merely implements OMB Circular A–21 as it relates to predetermined indirect cost rates for educational institutions.

C. Paperwork Reduction Act

The Paperwork Reduction Act does not apply because this final rule does not impose any new recordkeeping, information collection requirements, or collection of information from offerors, contractors, or members of the public which require the approval of OMB under 44 U.S.C. 3501, *et seq.*

List of Subjects in 48 CFR Parts 216, 242, and 252

Government procurement.

Claudia L. Naugle,

Deputy Director, Defense Acquisition Regulations Council.

Therefore, 48 CFR parts 216, 242 and 252 are amended as follows:

PARTS 216, 242, and 252—[AMENDED]

1. The authority for Parts 216, 242, and 252 continues to read as follows:

Authority: 41 U.S.C. 421 and 48 CFR Chapter 1.

2. Section 216.307 is added to read as follows:

216.307 Contract clauses.

(i) Use the clause at FAR 52.216–15, Predetermined Indirect Cost Rates, with 252.216–7002, Alternate A, in solicitations and contracts when a cost-reimbursement research and development contract with an educational institution (see FAR 42.705–3(b)) is contemplated and predetermined indirect cost rates are to be used.

3. Section 242.705–3, Educational institutions is added to read as follows:

242.705–3 Educational institutions.

(b) *Predetermined final indirect cost rates.*

(4)(i) Predetermined indirect cost rate proposals may cover a period of two to four years when the cognizant Contracting Officer determines that the educational institution's cost experience and other pertinent facts available are sufficient to enable the parties to reach an informed judgment on the probable levels of indirect costs and allocation base costs for the applicable future accounting periods. Predetermined rates covering two to four year periods are expected to be the norm in those situations.

(6) Predetermined indirect cost rates may be established to cover up to four years.

4. Section 252.216–7002 is added to read as follows:

252.216–7002 Alternate.

Alternate A (Oct 1994)

As prescribed in 216.307(i), substitute the following paragraphs (b) and (g) for paragraphs (b) and (g) of the clause at FAR 52.216–15, Predetermined Indirect Cost Rates:

(b) Not later than 90 days after the expiration of the Contractor's fiscal year (or other period specified in the Schedule), the Contractor shall submit to the cognizant Contracting Officer under subpart 42.7 of the Federal Acquisition Regulation (FAR) and, if required by agency procedures, to the cognizant Government audit activity, proposed predetermined indirect cost rates and supporting cost data. The proposed rate shall be based on the Contractor's actual cost experience during that fiscal year (or other period specified in the Schedule). Negotiations of predetermined indirect cost rates shall begin as soon as practical after receipt of the contractor's proposal.

(g) Allowable indirect costs for the period from the beginning of performance until the end of the Contractor's fiscal year (or other period specified in the Schedule) shall be obtained using the predetermined indirect cost rates and the bases shown in the Schedule.

[FR Doc. 94–26164 Filed 10–20–94; 8:45 am]

BILLING CODE 5000–04–M

DEPARTMENT OF TRANSPORTATION

Research and Special Programs Administration

49 CFR Part 171

[Docket No. HM–181G; Notice No. 94–10]

RIN 2137–AC36

Infectious Substances; Confirmation of Effective Date and Compliance Dates

AGENCY: Research and Special Programs Administration (RSPA), DOT.

ACTION: Final rule; confirmation of effective date and compliance dates.

SUMMARY: On September 22, 1994, RSPA published a final rule to extend the compliance dates for classification, hazard communication, and packaging requirements of the Hazardous Materials Regulations applicable to infectious substances, including regulated medical waste. The effective date of the rule was September 22, 1994, unless RSPA received, by September 30, 1994, any

comments illustrating that an extension of the compliance dates is not in the public interest. RSPA received two comments opposing the extension, but containing no specific information to support that an extension of the compliance dates is not in the public interest. Therefore, this document confirms that the compliance dates are extended as set forth in the September 22, 1994 final rule, and the effective date of that final rule is September 22, 1994.

EFFECTIVE DATE: September 22, 1994.

FOR FURTHER INFORMATION CONTACT: Eileen Martin or Jennifer Antonielli, Office of Hazardous Materials Standards, Research and Special Programs Administration, 400 Seventh St., SW., Washington, DC 20590–0001, telephone: (202) 366–8553.

SUPPLEMENTARY INFORMATION: On September 22, 1994, RSPA issued a final rule under Docket HM–181G (59 FR 48762) to extend the compliance dates for classification, hazard communication, and packaging requirements for infectious substances, including regulated medical waste (RMW). In the final rule, RSPA amended 49 CFR 171.14(b) to extend the compliance date from October 1, 1994, to October 1, 1995, for regulatory requirements applicable to RMW and materials infectious to animals only. This extension was provided to allow RSPA sufficient time to publish a Notice of Proposed Rulemaking (NPRM), evaluate comments received in response to the NPRM, and make any necessary changes to the HMR based on the merits of those comments. RSPA stated that, without an extension of the compliance date, shippers and transporters of these materials would have to comply with regulations that are likely to be changed in the near future and thereby incur unnecessary costs. For other infectious substances, i.e., for cultures and stocks of substances infectious to humans, the September 22, 1994 final rule extended the compliance date from October 1, 1994, to January 1, 1995. The requirements for these materials generally have not been at issue in comments or petitions filed with RSPA. The principal impacts of the January 1, 1995 compliance date will be a nomenclature change from the old "etiologic agent" hazard class to the new "Division 6.2" classification, elimination of the 50 milliliter exception for cultures and stocks of infectious substances, and expansion of the definition of infectious substances to cover substances, such as the human immunodeficiency virus (HIV) and Lyme disease, which are not listed in the Centers for Disease Control regulations (42 CFR 72.3).

In the preamble of the September 22, 1994 rule, RSPA stated that the compliance dates would be extended unless RSPA received comments by September 30, 1994, that illustrated that an extension of the compliance dates would not be in the public interest. RSPA received two comments opposed to and one comment in support of extending the compliance date for provisions applicable to RMW. The comment advocating the extension was submitted by the American Hospital Association (AHA). The AHA fully supported RSPA's decision to extend the compliance date for RMW and encouraged continued coordination with other Federal agencies involved in the regulation of infectious substances. The comments opposing the extension were submitted by a manufacturer of an exemption packaging used for transporting RMW and one of its customers, a waste transporter. Both commenters requested that the requirements for RMW be implemented without further delay. The manufacturer stated that it has spent in excess of $2 million developing its packaging, and that large transporters of RMW have "done little or nothing to help toward the safety of RMW transportation." The waste transporter stated that, by using the manufacturer's exemption packaging, it has an edge over many of the large transporters that are not and possibly may elect not to comply with the new requirements. The waste transporter stated that Federal regulations are necessary if safeguards are to be put in place for the safety and health of the public. Neither commenter provided any specific data or information suggesting that RMW is being transported unsafely, nor did they demonstrate that the extension would jeopardize safety or be contrary to the public interest. Based on these comments, and on the lack of any evidence indicating that a limited extension would adversely affect public health and safety, RSPA has determined that it is appropriate to extend the compliance dates. Therefore, RSPA is confirming the compliance dates set forth in the September 22, 1994 final rule.

Issued in Washington, DC on October 14, 1994, under authority delegated in 49 CFR part 106, appendix A.

Alan I. Roberts,

Associate Administrator for Hazardous Materials Safety.

[FR Doc. 94–26122 Filed 10–20–94; 8:45 am]

BILLING CODE 4910–60–P

DEPARTMENT OF COMMERCE

National Oceanic and Atmospheric Administration

50 CFR Part 301

[Docket No. 931235–4107; I.D. 101394B]

Pacific Halibut Fisheries

AGENCY: National Marine Fisheries Service (NMFS), National Oceanic and Atmospheric Administration (NOAA), Commerce.

ACTION: Notice of inseason action.

SUMMARY: The Assistant Administrator for Fisheries, NOAA, on behalf of the International Pacific Halibut Commission (IPHC), publishes this inseason action pursuant to IPHC regulations approved by the U.S. Government to govern the Pacific halibut fishery. This action is intended to enhance the conservation of Pacific halibut stocks in order to help sustain them at an adequate level in the northern Pacific Ocean and Bering Sea.

EFFECTIVE DATE: September 30, 1994, through December 31, 1994.

FOR FURTHER INFORMATION CONTACT: Steven Pennoyer, 907-586-7221; William W. Stelle, Jr., 206-526-6140; or Donald McCaughran, 206-634-1838.

SUPPLEMENTARY INFORMATION: The IPHC, under the Convention between the United States of America and Canada for the Preservation of the Halibut Fishery of the Northern Pacific Ocean and Bering Sea (signed at Ottawa, Ontario, on March 2, 1953), as amended by a Protocol Amending the Convention (signed at Washington, DC, on March 29, 1979), has issued this inseason action pursuant to IPHC regulations governing the Pacific halibut fishery. The regulations have been approved by the Secretary of State (59 FR 22522, May 2, 1994). On behalf of the IPHC, this inseason action is published in the **Federal Register** to provide additional notification of its effectiveness, and to inform persons subject to the inseason action of the restrictions and requirements established therein.

Inseason Action

1994 Halibut Landing Report No. 17

California and Oregon Sport Fisheries Close

The 1994 Oregon sport halibut fishery inside the 30–fathom curve nearest to the coastline between Cape Falcon (lat. 45°46′00″ N.) and the California border (lat. 42°00′00″ N.) closed, as scheduled, on September 30, 1994. Preliminary catch estimates indicate the season harvest will be within a few hundred

pounds of the 67,900–lb (30.8–metric ton) catch limit.

Sport fishing for Pacific halibut also closed, as scheduled, off the California coast on September 30, 1994. Information indicates that the harvest is within the estimated 1,813–lb (30.79–metric ton) catch limit.

With these closures, Pacific halibut sport fishing is closed in Area 2A, which comprises all waters off the coast of California, Oregon, and Washington, for the remainder of 1994.

Dated: October 17, 1994.

Joe P. Clem,

Acting Director, Office of Fisheries Conservation and Management, National Marine Fisheries Service.

[FR Doc. 94–26200 Filed 10–20–94; 8:45 am]

BILLING CODE 3510–22–F

---

50 CFR Part 640

[Docket No. 941090–4290; I.D. 081194A]

RIN 0648–AH27

Spiny Lobster Fishery of the Gulf of Mexico and South Atlantic

AGENCY: National Marine Fisheries Service (NMFS), National Oceanic and Atmospheric Administration (NOAA), Commerce.

ACTION: Final rule.

SUMMARY: NMFS publishes this final rule to amend the regulations implementing the Fishery Management Plan for the Spiny Lobster Fishery of the Gulf of Mexico and South Atlantic (FMP) to remove the requirement for Federal vessel permits in the commercial spiny lobster fishery in the exclusive economic zone (EEZ) off Florida, make technical corrections and revisions, and add a prohibition against making false statements to authorized officers. The intended effect of this final rule is to relieve a restriction in the fishery and to facilitate enforcement.

EFFECTIVE DATE: October 18, 1994.

ADDRESSES: Copies of documents supporting this action may be obtained from the Gulf of Mexico Fishery Management Council, 5401 West Kennedy Boulevard, Suite 331, Tampa, FL 33609.

FOR FURTHER INFORMATION CONTACT: Georgia Cranmore, 813–570–5305.

SUPPLEMENTARY INFORMATION: The spiny lobster fishery is managed under the FMP. The FMP was prepared by the Gulf of Mexico and South Atlantic Fishery Management Councils (Councils) and is implemented through regulations at 50 CFR part 640 under the authority of the Magnuson Fishery Conservation and Management Act.

NMFS published proposed and final rules on July 24, 1992 (57 FR 32956) and November 30, 1992 (57 FR 56516), respectively, to amend the regulations that implement the FMP (regulatory amendment). The regulatory amendment, among other things, adopted in the EEZ off Florida, Florida's spiny lobster trap certificate, trap reduction, and trap identification programs. The regulatory amendment was initiated by the Councils under the FMP's framework procedure for implementing specified gear and harvest restrictions, and included a provision to discontinue the issuance of Federal commercial permits for spiny lobster in the EEZ off Florida when Florida's trap certificate, and identification programs were in place and when Florida designated spiny lobster as a restricted species, thus limiting the sellers of spiny lobster to individuals who have restricted species endorsements on their Florida saltwater products licenses. Florida's trap certificate and identification programs were implemented July 1, 1993, and spiny lobster was designated a restricted species August 1, 1994. The conditions of the regulatory amendment for discontinuing the requirement for Federal vessel permits for commercial spiny lobster fishing in the EEZ off Florida have been met, and continuation of such requirement would constitute an unnecessary expense to fishermen and NMFS. Accordingly, this final rule eliminates that requirement.

The Federal commercial vessel permit requirement remains in effect for the EEZ other than off Florida. The requirement for a Federal tail-separation authorization in order to possess a separated spiny lobster tail in or from the EEZ remains in effect both off Florida and elsewhere. Since possession of spiny lobster tails may be authorized in some instances when a commercial vessel permit has not been issued, and, since without a permit there would be nothing to endorse, this final rule changes the "tail-separation endorsement," requirement in the present regulations to a "tail-separation permit" requirement. There are no changes in the criteria for obtaining or using a tail-separation endorsement/permit.

This final rule also changes all references to Florida's "Department of Natural Resources" to the "Department of Environmental Protection" to conform to the new/current name; eliminates unnecessary language in the citations for rules in the Florida Administrative Code; corrects the specific paragraphs in some of those citations; corrects the address of the Regional Director, NMFS; and adds a prohibition on making a false statement to an authorized officer concerning the taking, catching, harvesting, landing, purchase, sale, possession, or transfer of a spiny lobster. The added prohibition is necessary for effective enforcement and conforms the regulations to other fisheries regulations of the Southeast Region, NMFS.

Classification

This final rule has been determined to be not significant for purposes of E.O. 12866.

This final rule involves, but does not materially change, a collection-of-information requirement subject to the Paperwork Reduction Act, namely, applications for commercial vessel and tail-separation permits. This collection of information was previously approved by the Office of Management and Budget under OMB control number 0648–0205. This requirement has a public reporting burden estimated to average 15 minutes per response. Send comments regarding this burden estimate or any other aspect of the collection of information, including suggestions for reducing the burden, to Edward E. Burgess, NMFS, 9721 Executive Center Drive N. St. Petersburg, FL 33702 and to the Office of Information and Regulatory Affairs, OMB, Washington, DC 20503 (Attention: NOAA Desk Officer).

The Assistant Administrator for Fisheries, NOAA (AA), pursuant to section 553(b)(B) of the Administrative Procedure Act (APA), finds (1) for good cause, namely, that the conditions specified in the regulatory amendment for eliminating the Federal vessel permit requirement clearly have been met and a delay in removing this requirement would impose an unnecessary expense on participants in the fishery, notice and advance opportunity to comment on the elimination of the requirement for a Federal vessel permit would serve no useful purpose and thus is unnecessary and by imposing an unnecessary expense would be contrary to the public interest; (2) it is unnecessary to provide notice and advance opportunity to comment on the technical corrections and revisions to the regulations because no useful purpose would be served; and (3) it is unnecessary and would be contrary to the public interest to provide notice and advance opportunity to comment on the prohibition against making false statements to authorized officers because no useful purpose would be served and the associated delay could impede enforcement.

Under section 553(d)(1) of the APA, the provisions of the rule which remove the requirement for a Federal vessel permit may be and are being made immediately effective because they relieve a restriction. With respect to the provisions of the rule which make technical corrections and revisions, the AA pursuant to section 553(d)(3) delay for 30 days their effectiveness because they do not affect compliance. With respect to the provisions of this rule which add a prohibition against making false statements to authorized officers, the AA pursuant to section 553(d)(3) of the APA, finds that it would be contrary to the public interest to delay for 30 days its effectiveness because it could impede enforcement of the regulations.

List of Subjects in 50 CFR Part 640

Fisheries, Fishing, Reporting and recordkeeping requirements.

Dated: October 17, 1994.

Charles Karnella,

Acting Deputy Assistant Administrator for Fisheries, National Marine Fisheries Service.

For the reasons set out in the preamble, 50 CFR part 640 is amended as follows:

PART 640—SPINY LOBSTER FISHERY OF THE GULF OF MEXICO AND SOUTH ATLANTIC

1. The authority citation for part 640 continues to read as follows:

Authority: 16 U.S.C. 1801 *et seq.*

2. In § 640.2, the definition of "Regional Director" is revised to read as follows:

§ 640.2 Definitions.

* * * * *

Regional Director means the Director, Southeast Region, NMFS, 9721 Executive Center Drive N., St. Petersburg, FL 33702, telephone 813–570–5301; or a designee.

* * * * *

3. In § 640.4, the last sentence of paragraph (d) is removed and paragraphs (a), (b) heading, (b)(1), (b)(2)(vi), and (b)(2)(viii) introductory text are revised to read as follows:

§ 640.4 Permits and fees.

(a) *Applicability*—(1) *Licenses, certificates, and permits*—(i) *EEZ off Florida.* For a person to sell, trade, or barter, or attempt to sell, trade, or barter, a spiny lobster in or from the EEZ off Florida or for a person to be exempt from the daily bag and possession limit specified in § 640.23(a) for such spiny lobster, such person must have the licenses and certificates specified to be a "commercial harvester," as defined on November 30, 1992, in Rule 46–24.002(2), Florida Administrative Code.

(ii) *EEZ other than off Florida.* For a person to sell, trade, or barter, or attempt to sell, trade, or barter, a spiny lobster in or from the EEZ other than off Florida or for a person to be exempt from the daily bag and possession limit specified in § 640.23(a) for such spiny lobster, a Federal vessel permit must be issued to the harvesting vessel and must be on board.

(2) *Tail-separation permits.* For a person to possess aboard a fishing vessel a separated spiny lobster tail in or from the EEZ, a tail-separation permit must be issued to the vessel and must be on board.

(3) *Corporation/partnership-owned vessels.* For a vessel owned by a corporation or partnership to be eligible for a Federal vessel permit specified in paragraph (a)(1)(ii) of this section, the earned income qualification specified in paragraph (b)(2)(vi) of this section must be met by, and the statement required by that paragraph must be submitted by, an officer or shareholder of the corporation, a general partner of the partnership, or the vessel operator.

(4) *Operator-qualified permits.* A vessel permit issued upon the qualification of an operator is valid only when that person is the operator of the vessel.

(b) *Applications for permits.* (1) An application for a Federal vessel and/or tail-separation permit must be submitted and signed by the owner (in the case of a corporation, a qualifying officer or shareholder; in the case of a partnership, a qualifying general partner) or operator of the vessel. The application must be submitted to the Regional Director at least 30 days prior to the date on which the applicant desires to have the permit made effective.

(2) * * *

(vi) A sworn statement by the applicant for a vessel permit certifying that at least 10 percent of his or her earned income was derived from commercial fishing, that is, sale of the catch, during the calendar year preceding the application.

* * * * *

(viii) If a tail-separation permit is desired, a sworn statement by the applicant certifying that his or her fishing activity—

* * * * *

4. In § 640.6, in paragraph (b)(2), the reference to "Department of Natural Resources" is revised to read "Department of Environmental Protection", and paragraphs (a), (b) heading, and (b)(1) introductory text are revised to read as follows:

§ 640.6 Vessel and gear identification.

(a) *EEZ off Florida.* (1) An owner or operator of a vessel that is used to harvest spiny lobsters by traps in the EEZ off Florida must comply with the vessel and gear identification requirements applicable to the harvesting of spiny lobsters by traps in Florida's waters, as specified on November 30, 1992, in Sections 370.14 and 370.142, Florida Statutes, and in Rule 46–24.006 (3), (4), and (5), Florida Administrative Code.

(2) An owner or operator of a vessel that is used to harvest spiny lobsters by diving in the EEZ off Florida must comply with the vessel identification requirements applicable to the harvesting of spiny lobsters by diving in Florida's waters, as specified on November 30, 1992, in Rule 46–24.006(6), Florida Administrative Code.

(b) *EEZ other than off Florida.* (1) The owner or operator of a vessel that is used to harvest spiny lobsters in the EEZ other than off Florida, must meet the following vessel and gear identification requirements:

* * * * *

5. In § 640.7, paragraph (a) is revised and new paragraph (u) is added to read as follows:

§ 640.7 Prohibitions.

* * * * *

(a) Sell, trade, or barter, or attempt to sell, trade, or barter, a spiny lobster in or from the EEZ without a required license, certificate, or permit, as specified in § 640.4(a)(1).

* * * * *

(u) Make any false statement, oral or written, to an authorized officer concerning the taking, catching, harvesting, landing, purchase, sale, possession, or transfer of a spiny lobster.

§ 640.20 [Amended]

6. In § 640.20, in paragraph (c)(1), the phrase "Rules of the Department of Natural Resources, Florida Marine Fisheries Commission," is removed.

7. In § 640.21, paragraph (d) is revised to read as follows:

§ 640.21 Harvest limitations.

* * * * *

(d) *Tail separation.* The possession aboard a fishing vessel of a separated spiny lobster tail in or from the EEZ is authorized only when the possession is incidental to fishing exclusively in the EEZ on a trip of 48 hours or more and a Federal tail-separation permit specified in § 640.4(a)(2) has been issued to and is on board the vessel.

8. In § 640.22, paragraph (b)(3)(i) is revised to read as follows:

§ 640.22 Gear and diving restrictions.

* * * * *

(b) * * *

(3) * * *

(i) For traps in the EEZ off Florida, by the Florida Division of Law Enforcement, Department of Environmental Protection, as specified on November 30, 1992, in Rule 46–24.006(7), Florida Administrative Code; or

* * * * *

9. In § 640.23, paragraph (c)(2) and the first sentence of paragraph (d) are revised to read as follows:

§ 640.23 Bag and possession limits.

* * * * *

(c) * * *

(2) The vessel from which the person is operating has on board the required licenses, certificates, or permits, as specified in § 640.4(a)(1).

(d) During the commercial and recreational fishing season specified in § 640.20(a), aboard a vessel with the required licenses, certificates, or permits specified in § 640.4(a)(1) that harvests spiny lobster by net or trawl or has on board a net or trawl, the possession of spiny lobster in or from the EEZ may not exceed at any time 5 percent, whole weight, of the total whole weight of all fish lawfully in possession on board such vessel. * * *

* * * * *

[FR Doc. 94–26193 Filed 10–18–94; 3:34 pm]
BILLING CODE 3510–22–W

---

50 CFR Part 642

[Docket No. 940710–4292; I.D. 062894A]

Coastal Migratory Pelagic Resources of the Gulf of Mexico and South Atlantic

AGENCY: National Marine Fisheries Service (NMFS), National Oceanic and Atmospheric Administration (NOAA), Commerce.

ACTION: Final rule.

SUMMARY: In accordance with the framework procedure for adjusting management measures of the Fishery Management Plan for the Coastal Migratory Pelagic Resources (FMP), NMFS changes the total allowable catch for the Atlantic groups of king and Spanish mackerel and changes the commercial vessel trip limits for Gulf group king mackerel. The intended effect is to protect king and Spanish mackerel from overfishing and continue stock rebuilding programs while still allowing catches by important recreational and commercial fisheries dependent on king and Spanish mackerel.

EFFECTIVE DATE: November 21, 1994.

FOR FURTHER INFORMATION CONTACT: Mark F. Godcharles, 813–570–5306.

SUPPLEMENTARY INFORMATION: The fisheries for coastal migratory pelagic resources are regulated under the FMP. The FMP was prepared jointly by the Gulf of Mexico and South Atlantic Fishery Management Councils (Councils) and is implemented by regulations at 50 CFR part 642.

In accordance with the framework procedure of the FMP, the Councils recommended, and NMFS published, a proposed rule to change certain management measures applicable to the Atlantic groups of king and Spanish mackerel and Gulf group king mackerel (59 FR 40509, August 9, 1994). That proposed rule (1) described the FMP framework procedures through which the Councils recommended the changes, (2) specified the recommended changes, and (3) described the need and rationale for the recommended changes. Those descriptions are not repeated here.

No comments were received on the proposed rule.

Partial Disapproval

The Director, Southeast Region, NMFS, concurs that the Councils' recommendations are necessary to protect the stocks and prevent overfishing and that they are consistent with the objectives of the FMP, the Magnuson Act, and other applicable law, except for one of the recommendations. For the Florida west coast sub-zone, the Councils recommended a reduction in the daily trip limits for king mackerel, applicable to fishing with run-around gillnets, when 90 percent of the quota is reached. The trip limits were to be reduced from 25,000 lb (11,340 kg) to 15,000 lb (6,804 kg). NMFS finds that a reduction of the trip limits at that time would be impractical because the remaining 10 percent of the quota (43,250 lb (19,618 kg)) could be exceeded by the trip-limit landings of three vessels. If a substantial number of the 15 vessels expected to be in the gillnet fishery in that sub-zone were to make one trip under the reduced trip limits, the quota would be significantly exceeded before the fishery could be closed. A measure that increases the likelihood of a quota overrun would be inconsistent with national standard 1, which requires that management measures prevent overfishing while achieving, on a continuing basis, the optimum yield from the fishery.

Changes from the Proposed Rule

For the reasons described above, the specification of reduced trip limits applicable to king mackerel harvested by run-around gillnets in the Florida west coast sub-zone is removed and references to the removed paragraph are corrected.

Classification

This final rule is exempt from review under E.O. 12866.

The Deputy General Counsel of the Department of Commerce certified to the Chief Counsel for Advocacy of the Small Business Administration that this rule will not have a significant economic impact on a substantial number of small entities. The reasons were published in the proposed rule (59 FR 40509, August 9, 1994). As a result, a regulatory flexibility analysis was not prepared.

List of Subjects in 50 CFR Part 642

Fisheries, Fishing, Reporting and recordkeeping requirements.

Dated: October 14, 1994.

Gary Matlock,

Program Management Officer, National Marine Fisheries Service.

For the reasons set out in the preamble, 50 CFR part 642 is amended as follows:

PART 642—COASTAL MIGRATORY PELAGIC RESOURCES OF THE GULF OF MEXICO AND SOUTH ATLANTIC

1. The authority citation for part 642 continues to read as follows:

Authority: 16 U.S.C. 1801 *et seq.*

§ 642.7 [Amended]

2. In § 642.7(s), the reference to "§ 642.28(b)(1)(ii)" is removed and the reference "§ 642.28(b)(1)" is added in its place.

§ 642.25 [Amended]

3. In § 642.25, in paragraph (a)(2), the numbers "3.90" and "1.77" are removed and the numbers "3.71" and "1.68", respectively, are added in their place; in paragraph (b)(2), the numbers "4.50" and "2.04" are removed and the numbers "4.60" and "2.09", respectively, are added in their place.

§ 642.27 [Amended]

4. In § 642.27, in paragraph (b) the numbers "4.25" and "1.93" are removed and the numbers "4.35" and "1.97", respectively, are added in their place.

5. In § 642.28, in paragraphs (a)(1) and (a)(2), the words "50 percent" are removed and the words "75 percent" are added in their place; and paragraphs

(b)(1) and (c) are revised to read as follows:

§ 642.28 Additional limitations for Gulf group king mackerel in the eastern zone.

* * * * *

(b) * * *

(1) In the Florida west coast sub-zone, king mackerel in or from the EEZ may be possessed aboard or landed from a vessel for which a permit with a gillnet endorsement has been issued under § 642.4, from July 1, each fishing year, until a closure of the Florida west coast sub-zone's commercial fishery for vessels fishing with run-around gillnets has been effected under § 642.26—in amounts not exceeding 25,000 lb (11,340 kg) per day.

* * * * *

(c) *Notice of trip limit changes.* The Assistant Administrator, by filing a document with the Office of the **Federal Register**, will effect the trip limit change specified in paragraph (a) of this section when the requisite harvest level has been reached or is projected to be reached.

* * * * *

[FR Doc. 94–26119 Filed 10–20–94; 8:45 am]

BILLING CODE 3510–22–W

---

50 CFR Part 675

[Docket No. 931100–4043; I.D. 101494A]

Groundfish of the Bering Sea and Aleutian Islands Area

AGENCY: National Marine Fisheries Service (NMFS), National Oceanic and Atmospheric Administration (NOAA), Commerce.

ACTION: Closure.

SUMMARY: NMFS is prohibiting directed fishing for Pacific cod by vessels using hook-and-line or pot gear in the Bering Sea and Aleutian Islands management area (BSAI). This action is necessary to prevent exceeding the 1994 apportionment of the Pacific cod total allowable catch (TAC) allocated to vessels using hook-and-line or pot gear in the BSAI.

EFFECTIVE DATE: 12 noon, Alaska local time (A.l.t.), October 17, 1994, until 12 midnight, A.l.t., December 31, 1994.

FOR FURTHER INFORMATION CONTACT: Andrew N. Smoker, 907–586-7228.

SUPPLEMENTARY INFORMATION: The groundfish fishery in the BSAI exclusive economic zone is managed by NMFS according to the Fishery Management Plan for the Groundfish Fishery of the Bering Sea and Aleutian Islands (FMP) prepared by the North Pacific Fishery Management Council under authority of the Magnuson Fishery Conservation and Management Act. Fishing by U.S. vessels is governed by regulations implementing the FMP at 50 CFR parts 620 and 675.

In accordance with § 675.20(a)(7)(ii), the Pacific cod TAC for the BSAI was established by the final 1994 initial specifications of groundfish (59 FR 7656, February 16, 1994) and increased by an apportionment from the reserve (59 FR 21673, April 26, 1994) to 191,000 metric tons (mt). The 1994 Pacific cod TAC allocated to vessels using hook-and-line or pot gear is 92,040 mt pursuant to § 675.20(a)(3)(iv); 59 FR 4009, January 28, 1994; 59 FR 21673, April 26, 1994; and 59 FR 42776, August 19, 1994.

The Director, Alaska Region, NMFS (Regional Director), has determined, in accordance with § 675.20(a)(8), that the 1994 Pacific cod TAC allocated to vessels using hook-and-line or pot gear in the BSAI soon will be reached. Therefore, the Regional Director has established a directed fishing allowance of 91,540 mt, with consideration that 500 mt will be taken as incidental catch in directed fishing for other species in the BSAI. The Regional Director has determined that the directed fishing allowance has been reached. Consequently, NMFS is prohibiting directed fishing for Pacific cod by vessels using hook-and-line or pot gear in the BSAI, effective from 12 noon, A.l.t., October 17, 1994, until 12 midnight, A.l.t., December 31, 1994.

Directed fishing standards for applicable gear types may be found in the regulations at § 675.20(h).

Classification

This action is taken under § 675.20 and is exempt from review under E.O. 12866.

Authority: 16 U.S.C. 1801 *et seq.*

Dated: October 17, 1994.

Joe P. Clem,

Acting Director, Office of Fisheries Conservation and Management, National Marine Fisheries Service.

[FR Doc. 94–26082 Filed 10–17–94; 3:41 pm]

BILLING CODE 3510-22-F

Proposed Rules

Federal Register
Vol. 59, No. 203
Friday, October 21, 1994

This section of the FEDERAL REGISTER contains notices to the public of the proposed issuance of rules and regulations. The purpose of these notices is to give interested persons an opportunity to participate in the rule making prior to the adoption of the final rules.

DEPARTMENT OF THE INTERIOR

Office of Surface Mining Reclamation and Enforcement

30 CFR Part 935

Ohio Permanent Regulatory Program; Revision of Administrative Rules

AGENCY: Office of Surface Mining Reclamation and Enforcement (OSM), Interior.

ACTION: Proposed rule; public comment period and opportunity for public hearing on proposed amendment.

SUMMARY: OSM is announcing the receipt of proposed Program Amendment Number 69 to the Ohio permanent regulatory program (hereinafter referred to as the Ohio program) under the Surface Mining Control and Reclamation Act of 1977 (SMCRA). The amendment was initiated by Ohio and is intended to make the Ohio program as effective as the corresponding Federal regulations concerning the filing of financial interest statements, appeal procedures for remedial actions regarding prohibited financial interests, and the submittal of yield data with requests for bond release on areas reclaimed to pasture or grazing land.

DATES: Written comments must be received on or before 4:00 p.m., E.D.T., on November 21, 1994. If requested, a public hearing on the proposed amendment will be held on November 15, 1994. Requests to speak at the hearing must be received by 4:00 p.m., E.D.T., on November 7, 1994.

ADDRESSES: Written comments and requests to testify at the hearing should be mailed or hand-delivered to Robert H. Mooney, Acting Director, Columbus Field Office, at the address listed below.

Any disabled individual who has need for a special accommodation to attend a public hearing should contact the individual listed under **FOR FURTHER INFORMATION CONTACT.** Copies of the Ohio program, the proposed amendment, a listing of any scheduled public hearings, and all written comments received in response to this document will be available for public review at the addresses listed below during normal business hours, Monday through Friday, excluding holidays. Each requester may receive one free copy of the proposed amendment by contacting OSM's Columbus Field Office.

Robert H. Mooney, Acting Director, Columbus Field Office, Office of Surface Mining Reclamation and Enforcement, 4480 Refugee Road, Suite 201, Columbus, Ohio 43232, Telephone: (614) 866–0578.

Ohio Department of Natural Resources, Division of Reclamation, 1855 Fountain Square Court, Building H–3, Columbus, Ohio 43224, Telephone: (614) 265–6675.

FOR FURTHER INFORMATION CONTACT:

Robert H. Mooney, Acting Director, Columbus Field Office, (614) 866–0578.

SUPPLEMENTARY INFORMATION:

I. Background on the Ohio Program

On August 16, 1982, the Secretary of the Interior conditionally approved the Ohio program. Background information on the Ohio program, including the Secretary's findings, the disposition of comments, and the conditions of approval can be found in the August 10, 1982 **Federal Register** (47 FR 34688). Subsequent actions concerning the conditions of approval and program amendments are identified at 30 CFR 935.11, 935.12, 935.15, and 935.16.

II. Description of the Proposed Amendment

The Ohio Department of Natural Resources, Division of Reclamation (Ohio), submitted proposed Program Amendment Number 69 by letter dated September 22,1 994 (Administrative Record No. OH–2059). In this amendment, Ohio proposes to revise two rules at Ohio Administrative Code (OAC) sections 1501:13–1–03 and 13–7–05 to make the Ohio program as effective as the corresponding Federal regulations concerning financial interest statements and yield data for pasture or grazing land. The substantive rule revisions proposed by Ohio in this amendment are briefly described below.

A. Financial Interest Statements (OAC section 1501:13–1–03)

1. Definition of "Employee"

Ohio is revising paragraph (D)(2) to provide that members of the Ohio Board on Unreclaimed Strip Mined Lands are included under this definition. Members of the Ohio Reclamation Board of Review and the board's hearing officers are not included under this definition.

2. Hearing Officers of the Ohio Reclamation Board of Review

Ohio is revising paragraphs (F)(1), (G)(1), and (H) to require that hearing officers of the Ohio Reclamation Board of Review must also file annual financial interest statements.

3. Standard Form for Annual Financial Interest Statements

Ohio is revising paragraph (I)(1) to specify that employees shall use Form OSM–23 to file their annual financial interest statements.

4. Appeal of Remedial Actions

Ohio is revising paragraph (L)(1) to specify that nothing in OAC section 1501:13–1–03 modifies any right of appeal that any employee may have under State law of a decision by the Chief of the Division of Reclamation, Ohio Department of Natural Resources, on an employee's appeal of remedial action for prohibited financial interests. Ohio is also revising paragraphs (L) (2) and (3) to provide that members of the Ohio Reclamation Board of Review and the board's hearing officers may request advisory opinions from the Director of the Office of Surface Mining Reclamation and Enforcement on issues pertaining to an apparent prohibited financial interest.

B. Yield Data for Pasture or Grazing Land (OAC section 1501:13–7–05)

1. Ohio is adding the requirement in paragraph (A)(2)(c)(ii) that requests for approval of phase III reclamation on acreage reclaimed as pasture or grazing land (as well as acreage reclaimed to cropland or prime farmland must include yield data.

III. Public Comment Procedures

In accordance with the provisions of 30 CFR 732.17(h), OSM is now seeking comment on whether the proposed amendment satisfies the applicable

program approval criteria of 30 CFR 732.15. If the amendment is deemed adequate, it will become part of the Ohio program.

Written Comments

Written comments should be specific, pertain only to the issues proposed in this rulemaking, and include explanations in support of the commenter's recommendations. Comments received after the time indicated under **DATES** or at locations other than the Columbus Field Office will not necessarily be considered in the final rulemaking or included in the Administrative Record.

Public Hearing

Persons wishing to speak at the public hearing should contact the person listed under **FOR FURTHER INFORMATION CONTACT** by 4 p.m., E.D.T., on November 7, 1994. The location and time of the hearing will be arranged with those persons requesting the hearing. If no one requests an opportunity to comment at a public hearing, the hearing will not be held.

Filing of a written statement at the time of the hearing is requested as it will greatly assist the transcriber. Submission of written statements in advance of the hearing will allow OSM officials to prepare adequate responses and appropriate questions.

The public hearing will continue on the specified date until all persons scheduled to speak have been heard. Persons in the audience who have not been scheduled to speak and who wish to do so will be heard following those who have been scheduled. The hearing will end after all persons scheduled to speak and persons present in the audience who wish to speak have been heard.

Public Meeting

If only one person requests an opportunity to comment at a hearing, a public meeting, rather than a public hearing, may be held. Persons wishing to meet with OSM representatives to discuss the proposed amendment may request a meeting by contacting the person listed under **FOR FURTHER INFORMATION CONTACT.** All such meeting shall be open to the public and, if possible, notices of meetings will be posted at the locations listed under **ADDRESSES.** A written summary of each public meeting will be made a part of the Administrative Record.

IV. Procedural Determinations

Executive Order No. 12866

This rule is exempted from review by the Office of Management and Budget (OMB) under Executive Order 12866 (Regulatory Planning and Review).

Executive Order 12778

The Department of the Interior has conducted the reviews required by section 2 of Executive Order 12778 (Court Justice Reform) and has determined that, to the extent allowed by law, this rule meets the applicable standards of subsections (a) and (b) of that section. However, these standards are not applicable to the actual language of State regulatory programs and program amendments since each such program is drafted and promulgated by a specific State, not by OSM. Under sections 503 and 505 of SMCRA (30 U.S.C. 1253 and 1255) and 30 CFR 730.11, 732.15, and 732.17(h)(10), decisions on proposed State regulatory programs and program amendments submitted by the States must be based solely on a determination of whether the submittal is consistent with SMCRA and its implementing Federal regulations and whether the requirements of 30 CFR Parts 730, 731, and 732 have been met.

National Environmental Policy Act

No environmental impact statement is required for this rule since section 702(d) of SMCRA [30 U.S.C. 1292(d)] provides that agency decisions on proposed State regulatory program provisions do not constitute major Federal actions within the meaning of section 102(2)(C) of the National Environmental Policy Act, 42 U.S.C. 4332(2)(C).

Paperwork Reduction Act

This rule does not contain information collection requirements which require approval by the Office of Management and Budget under the Paperwork Reduction Act, 44 U.S.C. 3507 *et seq.*

Regulatory Flexibility Act

The Department of the Interior has determined that this rule will not have a significant economic impact on a substantial number of small entities under the Regulatory Flexibility Act (5 U.S.C. 601 *et seq.*). The submittal which is the subject of this rule is based upon corresponding Federal regulations for which an economic analysis was prepared and certification made that such regulations would not have a significant economic effect upon a substantial number of small entities. Accordingly, this rule will ensure that existing requirements previously promulgated by OSM will be implemented by the State. In making the determination as to whether this rule would have a significant economic impact, the Department relied upon the data and assumptions in the analyses for the corresponding Federal regulations.

List of Subjects in 30 CFR Part 935

Intergovernmental relations, Surface mining, Underground mining.

Dated: October 12, 1994.

Ronald C. Recker,

Acting Assistant Director, Eastern Support Center.

[FR Doc. 94–26153 Filed 10–20–94; 8:45 am]

BILLING CODE 4310–05–M

---

30 CFR Part 944

Utah Regulatory Program

AGENCY: Office of Surface Mining Reclamation and Enforcement (OSM), Interior.

ACTION: Proposed rule; public comment period and opportunity for public hearing on proposed amendment.

SUMMARY: OSM is announcing receipt of a proposed amendment to the Utah regulatory program (hereinafter, the "Utah program") under the Surface Mining Control and Reclamation Act of 1977 (SMCRA). The proposed amendment consists of revisions to the Utah rules pertaining to required liability insurance for coal mining operations. The amendment is intended to allow coal mining operators to provide a certain amount of their liability insurance through self-insurance.

DATES: Written comments must be received by 4:00 p.m., m.d.t., November 21, 1994. If requested, a public hearing on the proposed amendment will be held on November 15, 1994.

Requests to present oral testimony at the hearing must be received by 4:00 p.m., m.d.t., November 7, 1994.

ADDRESSES: Written comments should be mailed or hand delivered to Thomas E. Ehmett at the address listed below.

Any disabled individual who has need for a special accommodation to attend a public hearing should contact the individual listed under **FOR FURTHER INFORMATION CONTACT.**

Copies of the Utah program, the proposed amendment, and all written comments received in response to this document will be available for public review at the addresses listed below during normal business hours, Monday through Friday, excluding holidays. Each requester may receive one free copy of the proposed amendment by contacting OSM's Albuquerque Field Office.

Thomas E. Ehmett, Acting Director, Albuquerque Field Office, Office of

Surface Mining Reclamation and Enforcement, 505 Marquette Avenue NW., Suite 1200, Albuquerque, New Mexico 87102.

Utah Coal Regulatory Program, Division of Oil, Gas and Mining, 355 West North Temple, 3 Triad Center, Suite 350, Salt Lake City, Utah 84180–1203, Telephone: (801) 538–5340.

FOR FURTHER INFORMATION CONTACT: Thomas E. Ehmett, Telephone: (505) 766–1486.

SUPPLEMENTARY INFORMATION:

I. Background on the Utah Program

On January 21, 1981, the Secretary of the Interior conditionally approved the Utah program. General background information on the Utah program, including the Secretary's findings, the disposition of comments, and the conditions of approval of the Utah program can be found in the January 21, 1981, **Federal Register** (46 FR 5899). Subsequent actions concerning Utah's program and program amendments can be found at 30 CFR 944.15, 944.16, and 944.30.

II. Proposed Amendment

By letter dated October 4, 1994, Utah submitted a proposed amendment to its program pursuant to SMCRA (administrative record No. UT–979). Utah submitted the proposed amendment at its own initiative with the intention of allowing companies in the coal industry, if they so desire, to provide a certain amount of their liability insurance through self-insurance. The provision of the Utah Coal Mining Rules that Utah proposes to revise is Utah Administrative Rule (Utah Admin. R.) 645–301–890.400, Terms and Conditions for Liability Insurance.

Specifically, Utah proposed to revise Utah Admin. R. 645–301–890.400 by cross-referencing a Utah self-insurance statutory provision at Utah Code Annotated (U.C.A.) 63–30–28. This provision authorizes governmental entities to purchase liability or liability self-insurance, and to establish trust accounts for self-insurance. Utah's proposed revision at Utah Admin. R. 645–301–890.400 reads as follows, with the italicized language representing wording that is being added to the existing rule, and the capitalized language in brackets representing wording that is being deleted.

890.400 The Division [of Oil, Gas and Mining] may accept from the applicant, in lieu of a certificate for a public liability insurance policy, satisfactory evidence from the applicant that it satisfies applicable state self-insurance requirements *Section 63–30–28, U.C.A.* [Approved as part of the state program] and the requirements of R645–301–890.100 through R645–301–890.300.

III. Public Comment Procedures

In accordance with the provisions of 30 CFR 732.17(h), OSM is seeking comments on whether the proposed amendment satisfies the applicable program approval criteria of 30 CFR 732.15. If the amendment is deemed adequate, it will become part of the Utah program.

1. Written Comments

Written comments should be specific, pertain only to the issues proposed in this rulemaking, and include explanations in support of the commenter's recommendations. Comments received after the time indicated under **DATES** or at locations other than the Albuquerque Field Office will not necessarily be considered in the final rulemaking or included in the administrative record.

2. Public Hearing

Persons wishing to testify at the public hearing should contact the person listed under **FOR FURTHER INFORMATION CONTACT** by 4:00 p.m., m.d.t., November 7, 1994. The location and time of the hearing will be arranged with those persons requesting the hearing. If no one requests an opportunity to testify at the public hearing, the hearing will not be held.

Filing of a written statement at the time of the hearing is requested as it will greatly assist the transcriber. Submission of written statements in advance of the hearing will allow OSM officials to prepare adequate responses and appropriate questions.

The public hearing will continue on the specified date until all persons scheduled to testify have been heard. Persons in the audience who have not been scheduled to testify, and who wish to do so, will be heard following those who have been scheduled. The hearing will end after all persons scheduled to testify and persons present in the audience who wish to testify have been heard.

3. Public Meeting

If only one person requests an opportunity to testify at a hearing, a public meeting, rather than a public hearing, may be held. Persons wishing to meet with OSM representatives to discuss the proposed amendment may request a meeting by contacting the person listed under **FOR FURTHER INFORMATION CONTACT**. All such meetings will be open to the public and, if possible, notices of meetings will be posted at the locations listed under **ADDRESSES**. A written summary of each meeting will be made a part of the administrative record.

IV. Procedural Determinations

1. Executive Order 12866

This rule is exempted from review by the Office of Management and Budget (OMB) under Executive Order 12866 (Regulatory Planning and Review).

2. Executive Order 12778

The Department of the Interior has conducted the reviews required by section 2 of Executive Order 12778 (Civil Justice Reform) and has determined that this rule meets the applicable standards of subsections (a) and (b) of that section. However, these standards are not applicable to the actual language of State regulatory programs and program amendments since each such program is drafted and promulgated by a specific State, not by OSM. Under sections 503 and 505 of SMCRA (30 U.S.C. 1253 and 12550) and the Federal regulations at 30 CFR 730.11, 732.15, and 732.17(h)(10), decisions on proposed State regulatory programs and program amendments submitted by the States must be based solely on a determination of whether the submittal is consistent with SMCRA and its implementing Federal regulations and whether the other requirements of 30 CFR parts 730, 731, and 732 have been met.

3. National Environmental Policy Act

No environmental impact statement is required for this rule since section 702(d) of SMCRA 930 U.S.C. 1292(d)) provides that agency decisions on proposed State regulatory program provisions do not constitute major Federal actions within the meaning of section 102(2)(C) of the National Environmental Policy Act (42 U.S.C. 4332(2)(C)).

4. Paperwork Reduction Act

This rule does not contain information collection requirements that require approval by OMB under the Paperwork Reduction Act (44 U.S.C. 3507 *et seq.*).

5. Regulatory Flexibility Act

The Department of the Interior has determined that this rule will not have a significant economic impact on a substantial number of small entities under the Regulatory Flexibility Act (5 U.S.C. 601 *et seq.*). The State submittal that is the subject of this rule is based upon counterpart Federal regulations for which an economic analysis was prepared and certification made that

such regulations would not have a significant economic effect upon a substantial number of small entities. Accordingly, this rule will ensure that existing requirements previously promulgated by OSM will be implemented by the State. In making the determination as to whether this rule would have a significant economic impact, the Department relied upon the data and assumptions for the counterpart Federal regulations.

List of Subjects in 30 CFR Part 944

Intergovernmental relations, Surface mining, Underground mining.

Dated: October 14, 1994.

Charles E. Sandberg,

Acting Assistant Director, Western Support Center.

[FR Doc. 94–26065 Filed 10–20–94; 8:45 am]

BILLING CODE 4310–05–M

DEPARTMENT OF THE TREASURY

Fiscal Service

31 CFR Part 247

RIN 1510–AA44

Regulations Governing FedSelect Checks

AGENCY: Treasury, Fiscal, Financial Management Service.

ACTION: Notice of proposed rulemaking.

SUMMARY: This rulemaking proposes new regulatory text for 31 CFR Part 247 to govern the use of FedSelect checks, a new payment instrument for use by Federal agencies in paying Federal obligations. This rulemaking sets forth procedural instructions for using FedSelect checks, and defines the rights and liabilities of the Federal Government, Federal Reserve Banks, and depositary institutions in connection with FedSelect checks.

DATES: Comments must be received on or before November 21, 1994.

ADDRESSES: All comments on this proposed rule should be addressed to Mr. John Galligan, Director, Cash Management Policy and Planning Division, Financial Management Service, 401 14th Street, SW, Room 511, Washington, D.C. 20227.

FOR FURTHER INFORMATION CONTACT: Mr. John Galligan, Director, Cash Management Policy and Planning Division, 202–874–6935; or Mr. Brad Ipema, Principal Attorney, 202–874–6680.

SUPPLEMENTARY INFORMATION: The Financial Management Service, U.S. Department of the Treasury (FMS), currently offers Federal agencies two payment mechanisms for paying Federal obligations. A Federal agency may either request the issuance of a Treasury check or the initiation of an electronic funds transfer. However, the FMS will soon be making available to Federal agencies a third payment option called FedSelect, a new check instrument to be used with imprest fund transactions and other "on-demand" payment needs. The preferred method of payment is electronic. However, FedSelect is the FMS's response to customer needs for a new paper instrument and is to be used only when checks are deemed appropriate and consistent with FMS policy.

Federal agencies that use the new payment instrument will be given a supply of FedSelect checks, on Federal Reserve Bank check stock, which are drawn on a Federal Reserve Bank in its banking capacity, rather than the United States Treasury. Federal agencies will be able to issue the FedSelect checks on site in payment for United States obligations.

These proposed regulations set forth procedural instructions for using FedSelect checks, and define the rights, responsibilities, and liabilities of the Federal Government, Federal Reserve Banks, and financial institutions in connection with FedSelect checks. These rules for FedSelect checks differ from those applying to Treasury checks in three important ways. First, FedSelect checks will be negotiable for 90 or 120 days, whereas Treasury checks are payable for 1 year after issuance. Second, Federal agencies can at their own discretion stop payment on a FedSelect check. Stop payment orders generally are not available on Treasury checks. Third, the regulations governing Treasury checks are inapplicable to FedSelect checks, unless otherwise provided by statute or this proposed rule. In all matters not addressed by these proposed regulations, FedSelect checks will be governed by the Uniform Commercial Code, as drafted by the National Conference of Commissioners on Uniform State Laws, and by Regulation J (12 CFR Part 210) and Regulation CC (12 CFR Part 229) of the Board of Governors of the Federal Reserve.

FMS invites comments regarding the possibility of referencing within either this regulation or the Treasury Financial Manual a standard dollar limit of $10,000, with $25,000 exceptions by permission of FMS, above which a FedSelect check could not be issued by an agency. This limit is being considered to be consistent with FMS's electronic payment policies as contained within 31 CFR Part 206 and to minimize losses to agencies arising from negligence, forgeries, counterfeiting, and alterations. FMS requests that comments on this matter include any foreseen (positive or negative) effects of limiting the dollar amount of FedSelect checks, including whether a dollar limit would encourage an agency to participate in the FedSelect check program.

Rulemaking Analysis

It has been determined that this regulation is not a significant regulatory action as defined in E.O. 12866. Therefore, a regulatory assessment is not required. It is hereby certified that this regulation will not have a significant economic impact on a substantial number of small entities. A regulatory flexibility analysis is not required. It is anticipated that FedSelect checks will not negatively affect a substantial number of small entities because of the relatively low volume of checks to be issued in comparison to the use of other payment mechanisms by Federal agencies.

Notice and Comment

Public comment is solicited on all aspects of this proposed rule. The FMS will consider all comments made on the substance of this proposed rule, but does not intend to hold hearings on it.

List of Subjects in 31 CFR Part 247

Banks, Banking, Checks, Federal Reserve System.

Issuance

For the reasons set forth in the preamble, it is proposed to add 31 CFR part 247 to read as follows:

PART 247—REGULATIONS GOVERNING FEDSELECT CHECKS

Sec.
247.1 Applicability.
247.2 Governing law.
247.3 Definitions.
247.4 Federal Reserve Banks.
247.5 Federal agencies and termination of services.
247.6 Depositary institutions and presenting banks.
247.7 Certification and internal agency control.
247.8 Presentment.
247.9 Presentment warranties.
247.10 Notice and replacement—non-receipt, theft, loss or destruction; late presentment.
247.11 Losses and accountability.
247.12 Debt collection.
247.13 Funds for losses.
247.14 Additional requirements.
247.15 Waiver of regulations.
247.16 Supplements, amendments or revisions.

Authority: 12 U.S.C. 391; 31 U.S.C. Chapter 33.

§ 247.1 Applicability.

The regulations in this Part prescribe the rights and liabilities of the United States, the Federal Reserve Banks, depositary institutions, and others on FedSelect checks. These regulations apply to FedSelect checks issued on behalf of the United States for payments in connection with United States obligations. FedSelect checks are issued by Federal agencies on Federal Reserve Bank check stock. FedSelect checks are drawn on the payor Federal Reserve Bank in its banking capacity. The drawer of a FedSelect check is the United States; the drawee is a Federal Reserve Bank. Therefore, a FedSelect check shall not be deemed to be drawn on the United States nor shall the Federal Reserve Bank be deemed its drawer.

§ 247.2 Governing law.

Except as otherwise provided by statute or this Part, the regulations governing checks drawn on the United States or on designated depositaries of the United States (e.g., 31 CFR Parts 235, 240, 245, and 248) are inapplicable to FedSelect checks. As to definitions and other matters not specifically covered in this Part, FedSelect checks are governed by Regulation J of the Board of Governors of the Federal Reserve System, 12 CFR Part 210 ("Regulation J"), Regulation CC of the Board of Governors of the Federal Reserve System, 12 CFR Part 229 ("Regulation CC"), and to the extent not otherwise inconsistent with these regulations, Regulation J, and Regulation CC, the Uniform Commercial Code ("U.C.C."), as drafted by the National Conference of Commissioners on Uniform State Laws, as all three may from time to time be revised. Such matters include, but are not limited to, rules regarding general presentment and transfer warranties (as modified herein), indorsement, and final payment.

§ 247.3 Definitions.

For the purpose of this Part:

Agency means a department, agency, or instrumentality in the executive branch of the United States Government.

Bank means a depositary institution.

Department means the United States Department of the Treasury.

Depositary institution means an entity described in section 19(b) of the Federal Reserve Act (12 U.S.C. 461(b)) as a "Depository institution," as may be amended from time to time.

FedSelect check means a check drawn upon a Reserve Bank with the designation "FedSelect" printed on the check.

Payee means the person to whom a FedSelect check is payable.

Payor Reserve Bank means the Reserve Bank on which a FedSelect check is drawn.

Presenting bank means a depositary institution which sends a FedSelect check directly to a Reserve Bank for payment or collection.

Reserve Bank or *Federal Reserve Bank* means any Federal Reserve Bank or any branch of a Federal Reserve Bank.

§ 247.4 Federal Reserve Banks.

(a) Where FedSelect checks are issued on Reserve Bank check stock and drawn on the payor Reserve Bank in its banking capacity, the payor Reserve Bank shall perform certain functions as fiscal agent of the United States in the issuing, processing and final payment of FedSelect checks. A payor Reserve Bank shall act as fiscal agent of the United States on FedSelect checks only when authorized to do so by a Memorandum of Understanding between the Financial Management Service, U.S. Department of the Treasury (FMS), and the payor Reserve Bank.

(b) The payor Reserve Bank shall perform functions related to FedSelect checks as described in the Treasury Financial Manual (TFM), Volume II, Chapter 5000, entitled "Payment And Processing of FedSelect Checks by Federal Reserve Banks," as issued by the FMS. Copies of the TFM are available free to Government agencies. Others who are interested in ordering a copy may call (202) 874–9940 or write the Directives Management Branch, Financial Management Service, Room 5C16, 3700 East-West Highway, Hyattsville, Maryland 20782 for further information. Revisions to the TFM are issued as Bulletins and/or Transmittal Letters and are mailed to subscribers.

(c) As authorized by a Memorandum of Understanding between a payor Reserve Bank and the FMS and in accordance with this Part and instructions in the Treasury Financial Manual, the payor Reserve Bank shall pay to presenting banks amounts specified in a FedSelect check upon presentment of the FedSelect check through normal banking channels. Each payor Reserve Bank may issue operating circulars, letters or bulletins not inconsistent with this Part governing details of its handling of payments under this Part.

§ 247.5 Federal agencies and termination of services.

(a) Agencies may issue FedSelect checks in payment for United States obligations.

(b) Issuance of a FedSelect check by an agency in payment of an obligation shall constitute an agreement between the issuing agency and the FMS. The issuing agency shall adhere to the terms of the agreement, including those relating to fees for services provided by the FMS, as expressed in this Part and in the Treasury Financial Manual, Volume I, Part 4, Chapter 3500 (I TFM 4–3500), entitled "Issuance Of FedSelect Checks By Federal Agencies."

(c) In addition to the provisions of this Part, agencies issuing FedSelect checks shall adhere to instructions, contained in I TFM 4–3500, regarding items such as procedures for opening and closing FedSelect accounts with the FMS, procedures for the adjustment of agency FedSelect accounts where losses are the responsibility of the agency, procedures for the adjustment of agency FedSelect accounts in cases of termination of FedSelect services by the FMS, and performance requirements in the issuance of FedSelect checks.

(d) When an agency fails to adhere to the provisions of this Part or to the instructions contained in I TFM 4–3500, the FMS, at its discretion, may terminate the services of FedSelect checks. The FMS shall provide the agency with prior notification of the date on which services will be terminated.

§ 247.6 Depositary institutions and presenting banks.

(a) A depositary institution's acceptance of a FedSelect check issued pursuant to this Part shall constitute its agreement to the provisions of this Part.

(b) Each depositary institution by its action of handling a FedSelect check shall be deemed to warrant to the Federal Government that it has handled the FedSelect check in accordance with the requirements of the Uniform Commercial Code (UCC) and this part, including the presentment warranties described in § 247.9.

§ 247.7 Certification and internal agency control.

(a) A FedSelect check is not a check drawn on the United States Treasury. However, where the drawer of a FedSelect check is the United States, the requirements and procedures for disbursing and certifying activities under 31 U.S.C. 3321 apply to agency accountable officers issuing FedSelect checks.

(b) FedSelect checks shall be drawn by an individual who is duly authorized

by the agency, and shall be certified by a certifying officer.

(c) When an agency issues a FedSelect check in payment of a United States obligation, such agency certifies the issuance of the payment contemporaneous to the issuance of the FedSelect check. Therefore, where FedSelect checks are issued through an automated system, certification occurs through the on-line data transfer between the agency issuing a FedSelect check and the FMS.

(d) Agencies shall ensure that there are proper internal controls over the issuance of FedSelect checks, including payment authorization, check issuance, and reconciliations. Payment authorization is the process by which vouchers or invoices are approved for payment by individuals designated to do so by the head of the agency, or their designees. Check issuance is the physical issuance of a FedSelect check in payment of a duly approved voucher or invoice. Reconciliation is the process by which amounts authorized for payment are verified against amounts of checks issued.

§ 247.8 Presentment.

(a) Presentment of FedSelect checks must be made to the payor Reserve Bank. FedSelect checks must be presented through normal banking channels.

(b) FedSelect checks may have different periods of payability depending on the agencies' requirements. The standard period of payability will be 90 days. However, at the request of an agency to the FMS, the payability of a FedSelect check may be increased to 120 days.

(c) FedSelect checks shall bear a pre-printed legend, "Void After 90 Days," or "Void After 120 Days."

(d) When an outstanding FedSelect check reaches its stale-date, a cancellation indicator will be placed against it and its status reflected as canceled due to stale-dating. A payor Reserve Bank will refuse to pay a FedSelect check presented to the bank of first presentment more than the number of days stated on the FedSelect check. A FedSelect check not timely presented should be surrendered by the holder to the payor Reserve Bank as a non-cash item. The issuance of another FedSelect check to replace a lost, stolen, or destroyed FedSelect check must be made in accordance with § 247.10.

§ 247.9 Presentment warranties.

(a) Presenting banks and indorsers of the FedSelect check are deemed to guarantee that all prior indorsements are genuine, whether or not an express guaranty is placed on the FedSelect check. When the first indorsement has been made by one other than the payee personally, the presenting bank and the indorsers are deemed to guarantee, in addition to other warranties, that the person who so indorsed had unqualified capacity and authority to indorse the check on behalf of the payee.

(b) A presenting bank makes the warranties required of a sender under Subpart A of 12 CFR part 210 (Regulation J). This section does not limit any warranty by a presenter or other party arising under State law. Neither the Department, an agency nor a Reserve Bank is barred from recovering on a breach of warranty solely because:

(1) The negligence of the Department, an agency or of a Reserve Bank, as fiscal agent, had contributed to a fraudulent indorsement or material alteration;

(2) The Department, an agency or a Reserve Bank, as fiscal agent, had failed to discover promptly an unauthorized signature or alteration;

(3) An imposter had fraudulently caused the issuance of a FedSelect check in the name of any existing payee or fictitious payee; or

(4) An employee of the Department, an agency or a Reserve Bank, as fiscal agent, had caused the fraudulent issuance of a FedSelect check in the name of any existing payee or fictitious payee.

(c) In the event of a breach of warranty, the payor Reserve Bank may either return the item to the presenting bank or send to the presenting bank notice of the breach. If, upon receipt of the returned check or notice of the breach, the presenting bank does not make prompt restitution, the Department, an agency or the payor Reserve Bank may begin appropriate collection procedures.

§ 247.10 Notice and replacement—non-receipt, theft, loss or destruction; late presentment.

(a) If an agency has notice that a FedSelect check is not received by the payee within a reasonable time after a payment is due, or that a FedSelect check is lost, stolen or destroyed, the agency must request to the FMS that a stop payment order be placed on that item. The notice may be given by telephone or facsimile, but if it is given by telephone, such notice must be confirmed in writing before another payment is issued. The notification must contain sufficient information to identify the account and/or the obligation to which the payment is related. Payment on a FedSelect check is stopped if the notice of non-receipt, loss, theft, or destruction is received from the agency at such time and in such manner as to afford the payor Reserve Bank and the FMS a reasonable opportunity to act on it prior to final payment, as provided by applicable law. Once a stop payment order has been placed against an outstanding FedSelect check, such stop payment order will not be removed.

(b) The agency that issued the FedSelect check will issue another FedSelect check to replace a lost, stolen or destroyed FedSelect check, or other form of payment, at its discretion. Items an agency may require before issuing another FedSelect check include:

(1) Written confirmation that the original FedSelect check was lost, stolen, or destroyed;

(2) Confirmation from the FMS that the original FedSelect check is unpaid;

(3) A determination that recovery of the original FedSelect check is unlikely; and

(4) An indemnification agreement executed by the payee and/or indorsee.

(c) If a payor Reserve Bank refuses payment on a FedSelect check solely as a result of § 247.8(c), the agency that issued the original FedSelect check may issue, at its discretion, another FedSelect check, or other form of payment, to a payee or holder upon surrender of the original FedSelect check and execution of such indemnification agreement as may be required by the agency.

(d) Upon verification of the existence of a forged or unauthorized indorsement on a FedSelect check which has been finally paid, the agency that issued the original FedSelect check may issue, at its discretion, another FedSelect check or other form of payment to the person entitled. Disputes as to any continuing obligations for payment remain between the agency that issued the payment and the payee. Prior to the issuance of another FedSelect check, the payee or indorsee of the original FedSelect check may be required to execute an affidavit asserting that the payee or indorsee was in no way involved in the fraudulent or unauthorized indorsement of the original FedSelect check, in addition to any indemnification agreement required by the agency.

(e) In the case of a FedSelect check payable to the order of two or more persons, the requirements of this section apply to all designated payees.

§ 247.11 Losses and accountability.

(a) Agencies will be accountable for all losses arising out of agency activity related to the issuance of FedSelect checks. Such activities include negligence, fraud perpetrated by an

employee or agent of the agency, and fraud perpetrated by a service-provider or vendor receiving a FedSelect check as payment.

(b) If an agency had notice that a FedSelect check was not received by the payee within a reasonable time after a payment is due, or that a FedSelect check is lost, stolen or destroyed, and the agency failed to request to the FMS that a stop payment order be placed on that item pursuant to § 247.10(a), the agency will be accountable for any loss occurring as a result of the failure to request stop payment in a timely fashion.

(c) Losses caused by the fault or negligence of the FMS will be the accountability of the FMS. Such losses include failure to adhere to a request by an agency to place a stop payment order on an item in accordance with § 247.10(a).

(d) The FMS will be accountable for losses caused by third-parties, including losses caused by alteration, counterfeit and forgery of the payee indorsement, unless such losses occur as described in paragraphs (a) and (b) of this section.

§ 247.12 Debt collection.

(a) Agencies are responsible for collection procedures on all improperly paid items arising under the circumstances described in paragraphs (a) and (b) of § 247.11. However, excepting cases of fraud, an agency should write off a debt and refer it to the FMS for collection if it is not resolved within 90 days after the item was paid. When the FMS collects on the debt, the funds will be returned to the agency minus an administrative fee for the collection, in accordance with rules set forth in I TFM 4-3500. Accountability for a debt remains with the agency in accordance with § 247.11.

(b) The FMS is responsible for collection procedures on all improperly paid items arising under the circumstances described in paragraphs (c) and (d) of § 247.11. With all such items, the FMS will make an initial demand for refund of the amount of a check payment to the presenting bank or any other debtor. This demand shall advise the presenting bank or debtor of the amount demanded and the reason for the demand. All delinquent debts will be subject to interest, penalties and administrative fees in accordance with the Federal Claims Collections Standards. Any discrepancies should be brought to the attention of the FMS.

§ 247.13 Funds for losses.

(a) If collection efforts by the FMS for debts arising under paragraphs (c) and (d) of § 247.11 are unsuccessful, sources of funds for the payment of such losses include FMS appropriations, to the extent available, funds collected from reimbursement fees for services provided by the FMS pursuant to § 247.5(b), and other available sources.

(b) Reimbursement fees paid by agencies to the FMS for FedSelect check services will be retained for payment of uncollectible losses, consistent with all applicable laws.

§ 247.14 Additional requirements.

In any case or any class of cases arising under these regulations, the FMS or the agency that issued the FedSelect check may require such additional evidence of loss, improper indorsement or entitlement to another payment may be necessary for the protection of the interests of the United States.

§ 247.15 Waiver of regulations.

The FMS reserves the right to waive any provision(s) of these regulations in any case or class of cases for the convenience of the United States or in order to relieve any person(s) of unnecessary hardship, if such action is not inconsistent with law, does not impair any existing rights, and the FMS is satisfied that such action will not subject the United States to any substantial expense or liability.

§ 247.16 Supplements, amendments or revisions.

The FMS may, at any time, prescribe supplemental, amendatory, or revised regulations or revoke the regulations in this Part.

Dated: August 5, 1994.

Michael T. Smokovich,

Acting Commissioner.

[FR Doc. 94–25780 Filed 10–20–94; 8:45 am]

BILLING CODE 4810–35–P

ENVIRONMENTAL PROTECTION AGENCY

40 CFR Part 52

[MI19–02–6603; FRL–5094–9]

Approval and Promulgation of Implementation Plans; Michigan: Extension of Comment Period

AGENCY: Environmental Protection Agency (USEPA).

ACTION: Proposed rule; extension of the comment period.

SUMMARY: The USEPA is extending the comment period for a proposed action published June 15, 1994 (59 FR 30742). On June 15, 1994 USEPA proposed disapproval of the State Implementation Plan (SIP) submitted by the State of Michigan for the purpose of bringing about the attainment of the National Ambient Air Quality Standards (NAAQS) for particulate matter with an aerodynamic diameter less than or equal to a nominal 10 micrometers (PM).

On August 2, 1994 (59 FR 39311) USEPA extended the comment period, at the State's request, to September 14, 1994. At the request of the Michigan Department of Natural Resources, USEPA is extending the comment period.

DATES: Comments on the June 15, 1994 (59 FR 30742), proposed action are due October 31, 1994.

ADDRESSES: Comments may be submitted to Christos Panos, Environmental Engineer, Regulation Development Section, Air Toxics and Radiation Branch (AT–18J), United States Environmental Protection Agency, Region 5, 77 West Jackson Boulevard, Chicago, Illinois 60604–3590.

FOR FURTHER INFORMATION CONTACT: Christos Panos, (312) 353–8328.

Dated: October 12, 1994.

Valdas V. Adamkus,

Regional Administrator.

[FR Doc. 94–26197 Filed 10–20–94; 8:45 am]

BILLING CODE 6560–50–P

---

40 CFR Part 52

[CA–71–3–6350; FRL–5094–8]

Approval and Promulgation of Implementation Plans; California State Implementation Plan Revision; Monterey Bay Unified Air Pollution Control District

AGENCY: Environmental Protection Agency (EPA).

ACTION: Notice of proposed rulemaking.

SUMMARY: EPA is proposing to approve revisions to the California State Implementation Plan (SIP) which concern the control of emissions of volatile organic compounds (VOCs) from storage of organic liquids, gasoline transfer operations, and steam drive wells. The intended effect of proposing approval of these rules is to regulate emissions of volatile organic compounds (VOCs) in accordance with the requirements of the Clean Air Act, as amended in 1990 (CAA or the Act). EPA's final action on this notice of proposed rulemaking (NPRM) will incorporate these rules into the federally approved SIP. EPA has evaluated each of these rules and is proposing to approve them under provisions of the CAA regarding EPA action on SIP submittals, SIPs for national primary

and secondary ambient air quality standards and plan requirements for nonattainment areas.

DATES: Comments must be received on or before November 21, 1994.

ADDRESSES: Comments may be mailed to: Daniel A. Meer, Rulemaking Section (A–5–3), Air and Toxics Division, U.S. Environmental Protection Agency, Region IX, 75 Hawthorne Street, San Francisco, CA 94105.

Copies of the rule revisions and EPA's evaluation report of each rule are available for public inspection at EPA's Region IX office during normal business hours. Copies of the submitted rule revisions are also available for inspection at the following locations:

California Air Resources Board, Stationary Source Division, Rule Evaluation Section, 2020 "L" Street, Sacramento, CA 95814.

Monterey Bay Unified Air Pollution Control District, 24580 Silvercloud Court, Monterey, CA 93940.

FOR FURTHER INFORMATION CONTACT: Mae Wang, Rulemaking Section (A–5–3), Air and Toxics Division, U.S. Environmental Protection Agency, Region IX, 75 Hawthorne Street, San Francisco, CA 94105, Telephone: (415) 744–1200.

SUPPLEMENTARY INFORMATION:

Background

On March 3, 1978, EPA promulgated a list of ozone nonattainment areas under the provisions of the Clean Air Act, as amended in 1977 (1977 CAA or pre-amended Act), that included the Monterey Bay Area. 43 FR 8964, 40 CFR 81.305. Because these areas were unable to meet the statutory attainment date of December 31, 1982, California requested under section 172(a)(2), and EPA approved, an extension of the attainment date to December 31, 1987. 40 CFR 52.238. On May 26, 1988, EPA notified the Governor of California, pursuant to section 110(a)(2)(H) of the pre-amended Act, that the above district's portions of the California SIP were inadequate to attain and maintain the ozone standard and requested that deficiencies in the existing SIP be corrected (EPA's SIP-Call). On November 15, 1990, the Clean Air Act Amendments of 1990 were enacted. Public Law 101–549, 104 Stat. 2399, codified at 42 U.S.C. 7401–7671q. In amended section 182(a)(2)(A) of the CAA, Congress statutorily adopted the requirement that nonattainment areas fix their deficient reasonably available control technology (RACT) rules for ozone and established a deadline of May 15, 1991 for states to submit corrections of those deficiencies.

Section 182(a)(2)(A) applies to areas designated as nonattainment prior to enactment of the amendments and classified as marginal or above as of the date of enactment. It requires such areas to adopt and correct RACT rules pursuant to pre-amended section 172(b) as interpreted in pre-amendment guidance.[1] EPA's SIP-Call used that guidance to indicate the necessary corrections for specific nonattainment areas. The Monterey Bay Area is classified as moderate[2]; therefore, this area was subject to the RACT fix-up requirement and the May 15, 1991 deadline.

This document addresses EPA's proposed action for the following rules from the Monterey Bay Unified Air Pollution Control District (MBUAPCD): Rule 417, Storage of Organic Liquids; Rule 418, Transfer of Gasoline into Stationary Storage Containers; and Rule 427, Steam Drive Crude Oil Production Wells. On June 8, 1993, the State of California was issued a finding of nonsubmittal for the above rules, thus starting an 18 month sanctions clock under section 179(a) of the CAA. In addition, section 110(c) of the Act provides that EPA promulgate a Federal Implementation Plan (FIP) no later than two years after a finding under section 179(a). The rules being acted upon in this document were adopted by the MBUAPCD on August 25, 1993 and were submitted by the State of California to EPA on November 18, 1993. The mandatory sanctions clock was stopped on December 23, 1993 when EPA determined that the State had made a complete submittal pursuant to EPA's completeness criteria that are set forth in 40 CFR part 51, appendix V.[3] By this document, EPA is proposing to approve these rules into the SIP. Final approval of these rule revisions will incorporate the regulations into the federally approved SIP and stop the FIP clock.

Rule 417 controls VOCs associated with organic liquid storage, and Rule 418 controls VOCs during the transfer of gasoline from delivery vessels into storage containers. Rule 427 controls emissions from oil wells where production has been enhanced by steam injection. VOCs contribute to the production of ground level ozone and smog. The rules were adopted as part of the District's efforts to achieve the National Ambient Air Quality Standard (NAAQS) for ozone and in response to the section 182(a)(2)(A) CAA requirement. The following is EPA's evaluation and proposed action for these rules.

EPA Evaluation and Proposed Action

In determining the approvability of a VOC rule, EPA must evaluate the rule for consistency with the requirements of the CAA and EPA regulations, as found in section 110 and part D of the CAA and 40 CFR part 51 (Requirements for Preparation, Adoption, and Submittal of Implementation Plans). The EPA interpretation of these requirements, which forms the basis for today's action, appears in the various EPA policy guidance documents listed in footnote 1. Among those provisions is the requirement that a VOC rule must, at a minimum, provide for the implementation of RACT for stationary sources of VOC emissions. This requirement was carried forth from the pre-amended Act.

For the purpose of assisting state and local agencies in developing RACT rules, EPA prepared a series of Control Technique Guideline (CTG) documents. The CTGs are based on the underlying requirements of the Act and specify the presumptive norms for what is RACT for specific source categories. Under the CAA, Congress ratified EPA's use of these documents, as well as other Agency policy, for requiring States to "fix-up" their RACT rules. See section 182(a)(2)(A). The CTG documents applicable to Rule 417 are entitled, "Control of Volatile Organic Emissions from Petroleum Liquid Storage in External Floating Roof Tanks," EPA–450/2–78–047 and "Control of Volatile Organic Emissions from Petroleum Liquid Storage in Fixed Roof Tanks," EPA–450/2–77–036. The CTG documents applicable to Rule 418 are "Control of Volatile Organic Compound Leaks from Gasoline Tank Trucks and Vapor Collection Systems," EPA–450/2–78–051 and "Control of Volatile Organic Emissions from Bulk Gasoline Plants," EPA–450/2–77–035. For some source categories, such as steam-enhanced oil production wells, EPA did not publish a CTG. In such cases, the District makes

[1] Among other things, the pre-amendment guidance consists of those portions of the proposed post–1987 ozone and carbon monoxide policy that concern RACT, 52 FR 45044 (November 24, 1987); "Issues Relating to VOC Regulation Cutpoints, Deficiencies, and Deviations, Clarification to Appendix D of November 24, 1987 **Federal Register** Notice" (Blue Book) (notice of availability was published in the **Federal Register** on May 25, 1988); and the existing control technique guidelines (CTGs).

[2] The Monterey Bay Area retained its designation of nonattainment and was classified by operation of law pursuant to sections 107(d) and 181(a) upon the date of enactment of the CAA. See 56 FR 56694 (November 6, 1991).

[3] EPA adopted the completeness criteria on February 16, 1990 (55 FR 5830) and, pursuant to section 110(k)(1)(A) of the CAA, revised the criteria on August 26, 1991 (56 FR 42216).

a determination of what controls are required to satisfy the RACT requirement by reviewing the operations of facilities within the affected source category. In that review, the technological and economic feasibility of the proposed controls are considered. Additionally, for both CTG and non-CTG rules, the District may rely on EPA policy documents, such as the Blue Book, to ensure that the adopted rules are fully enforceable and strengthen or maintain the SIP.

MBUAPCD Rule 417, Storage of Organic Liquids, includes the following significant changes from the current SIP:

1. Gap requirements for vapor-mounted primary seals have been added.

2. Recordkeeping, definitions, and test methods have been added.

MBUAPCD Rule 418, Transfer of Gasoline into Stationary Storage Containers, includes the following major changes from the SIP:

1. An exemption for agricultural tanks has been revised to be consistent with EPA policy.

2. Recordkeeping, definitions, and test methods have been added.

3. Executive Officer discretion in determining equivalence of emission controls has been deleted.

MBUAPCD Rule 427, Steam Drive Crude Oil Production Wells, includes the following significant changes from the SIP:

1. Operational and repair requirements have been added.

2. Definitions, reporting, recordkeeping, and test methods have been added.

3. Executive Officer discretion in determining compliance equivalency has been deleted.

EPA has evaluated the submitted rules and has determined that they are consistent with the CAA, EPA regulations, and EPA policy. Therefore, MBUAPCD Rule 417, Rule 418, and Rule 427 are being proposed for approval under section 110(k)(3) of the CAA as meeting the requirements of section 110(a) and part D.

Nothing in this action should be construed as permitting or allowing or establishing a precedent for any future request for revision to any state implementation plan. Each request for revision to the state implementation plan shall be considered separately in light of specific technical, economic, and environmental factors and in relation to relevant statutory and regulatory requirements.

Regulatory Process

Under the Regulatory Flexibility Act, 5 U.S.C. 600 *et seq.*, EPA must prepare a regulatory flexibility analysis assessing the impact of any proposed or final rule on small entities. 5 U.S.C. 603 and 604. Alternatively, EPA may certify that the rule will not have a significant impact on a substantial number of small entities. Small entities include small businesses, small not-for-profit enterprises and government entities with jurisdiction over populations of less than 50,000.

SIP approvals under sections 110 and 301 and subchapter I, part D of the CAA do not create any new requirements, but simply approve requirements that the State is already imposing. Therefore, because the Federal SIP-approval does not impose any new requirements, it does not have a significant impact on any small entities affected. Moreover, due to the nature of the Federal-state relationship under the CAA, preparation of a regulatory flexibility analysis would constitute Federal inquiry into the economic reasonableness of state action. The CAA forbids EPA to base its actions concerning SIPs on such grounds. *Union Electric Co.* v. *U.S. E.P.A.*, 427 U.S. 246, 256–66 (S.Ct. 1976); 42 U.S.C. 7410(a)(2).

The Office of Management and Budget (OMB) has exempted this regulatory action from Executive Order 12866 review.

List of Subjects in 40 CFR Part 52

Environmental protection, Air pollution control, Hydrocarbons, Intergovernmental relations, Ozone, Reporting and recordkeeping requirements.

Authority: 42 U.S.C. 7401–7671q.

Dated: October 11, 1994.

John Wise,

Acting Regional Administrator.

[FR Doc. 94–26198 Filed 10–20–94; 8:45 am]

BILLING CODE 6560–50–F

---

40 CFR Part 180

[PP 1F3923/P593; FRL–4916–1]

RIN 2070–AC18

Pesticide Tolerances for Cyfluthrin

AGENCY: Environmental Protection Agency (EPA).

ACTION: Proposed rule.

SUMMARY: EPA proposes to amend tolerances for residues of the synthetic pyrethroid cyfluthrin in or on the raw agricultural commodities (RAC's) milk, meat, fat, and meat byproducts of cattle and establish a tolerance for milkfat. The proposed regulation to amend the tolerances and establish a maximum permissible level for residues of the pesticide in milkfat was requested in a petition submitted by Miles Corp., Animal Products (formerly Mobay Corp.).

DATES: Comments, identified by the document control number, [PP 1F3923/P593], must be received on or before November 21, 1994.

ADDRESSES: By mail, submit written comments to: Public Response and Program Resources Branch, Field Operations Division (7506C), Office of Pesticide Programs, Environmental Protection Agency, 401 M St., SW., Washington, DC 20460. Office location and telephone number: In person, bring comments to: Rm. 1132, CM #2, 1921 Jefferson Davis Hwy., Arlington, VA 22202.

Information submitted as a comment concerning this document may be claimed confidential by marking any part or all of that information as "Confidential Business Information" (CBI). Information so marked will not be disclosed except in accordance with procedures set forth in 40 CFR part 2. A copy of the comment that does not contain CBI must be submitted for inclusion in the public record. Information not marked confidential may be disclosed publicly by EPA without prior notice. All written comments will be available for public inspection in Rm. 1132 at the address given above, from 8 a.m. to 4 p.m., Monday through Friday, excluding legal holidays.

FOR FURTHER INFORMATION CONTACT: By mail: George T. LaRocca, Product Manager (PM 13), Registration Division (7505C), Environmental Protection Agency, 401 M St., SW., Washington, DC 20460. Office location and telephone number: Rm. 200, CM #2, 1921 Jefferson Davis Hwy., Arlington, VA 22202, (703)–305–6100.

SUPPLEMENTARY INFORMATION: EPA issued a notice, published in the **Federal Register** of April 3, 1991 (56 FR 13642), which announced that Miles Corp. had submitted pesticide petition (PP) 1F3923 to EPA requesting that the Administrator, pursuant to section 408(d) of the Federal Food, Drug, and Cosmetic Act (FFDCA), 21 U.S.C. 346a(d), amend 40 CFR 180.436 by increasing tolerances for residues of the insecticide cyfluthrin, [cyano[4-fluoro-3-phenoxyphenyl]-methyl-3-[2,2-dichloroethenyl]-2,2-dimethylcyclopropanecarboxylate], in or on the raw agricultural commodities milk to 0.08 part per million (ppm)

(from 0.01 ppm) and meat, fat, and meat byproducts of cattle to 0.40 ppm (from 0.05 ppm). The proposal to increase tolerances was submitted in support of direct application (pour-on) of the pesticide Bayocide Pour On Insecticide containing cyfluthrin to lactating dairy and beef cattle.

A review of the data indicated that cyfluthrin residues concentrate in fat; therefore, Miles Corp. was asked to amend the petition by requesting an appropriate milkfat tolerance. On February 14, 1994, Miles Corp. submitted an amended pesticide petition proposing that tolerances be established for milkfat at 2.5 ppm (reflecting 0.08 ppm in whole milk).

The data submitted in support of these tolerances and other relevant material have been evaluated. The toxicological and metabolism data and analytical methods for enforcement purposes considered in support of these tolerances are discussed in detail in related documents published in the **Federal Register** of August 16, 1989 (54 FR 33718).

A dietary exposure/risk assessment was performed for cyfluthrin using a Reference Dose (RfD) of 0.025 mg/kg bwt/day, based on a no-observed-effect-level (NOEL) of 2.5 mg/kg/ bwt/day and an uncertainty factor of 100. The NOEL was determined in a 2-year rat feeding study. The endpoint effects of concern were decreased body weights and inflammation of the kidneys. The Theoretical Maximum Residue Contribution (TMRC) from established tolerances utilizes 5.5% of the RfD for the U.S. population or 11% of the RfD if the new tolerances are granted. Established tolerances utilize 20% of the RfD for nonnursing infants less than 1 year old, the subgroup with the highest estimated exposure to cyfluthrin residues or 30% of the RfD if the new tolerances are granted. Generally speaking, EPA has no cause for concern if total residue contribution for published and proposed tolerances is less than the RfD.

The metabolism of the chemical in animals for these uses is adequately understood. An adequate analtyical method, gas-liquid chromatography, is available for enforcement purposes. The enforcement methodology has been submitted to the Food and Drug Administration for publication in the Pesticide Analytical Manual, Vol. II (PAM II). Because of the long lead time for publication of the method in PAM II, the analytical methodology is being made available in the interim to anyone interested in pesticide enforcement when requested from: Calvin Furlow, Public Response and Program Resources Branch, Field Opearations Division (7506C), Office of Pesticide Programs, Environmental Protection Agency, 401 M St., SW., Washington, DC 20460. Office location and telephone number: Rm. 1132, CM #2, 1921 Jefferson Davis Hwy., Arlington, VA 22202, (703)-305-5232.

There are currently no actions pending against the continued registration of this chemical.

Based on the information and data considered, the Agency has determined that the tolerances established by amending 40 CFR part 180 would protect the public health. Therefore, it is proposed that the tolerances be established as set forth below.

Any person who has registered or submitted an application for registration of a pesticide under the Federal Insecticide, Fungicide, and Rodenticide Act (FIFRA) as amended which contains any of the ingredients listed herein may request within 30 days after publication of this document in the **Federal Register** that this rulemaking proposal be referred to an Advisory Committee in accordance with section 408(e) of the FFDCA.

Interested persons are invited to submit written comments on the proposed regulations. Comments must bear a notation indicating the document control number, [PP 1F3923/P593]. All written comments filed in response to these petitions will be available in the Public Response and Program Resources Branch, at the address given above from 8 a.m. to 4 p.m., Monday through Friday, except legal holidays.

Under Executive Order 12866 (58 FR 51735, Oct. 4, 1993), the Agency must determine whether the regulatory action is "significant" and therefore subject to all the requirements of the Executive Order (i.e., Regulatory Impact Analysis, review by the Office of Management and Budget (OMB)). Under section 3(f), the order defines "significant" as those actions likely to lead to a rule (1) having an annual effect on the economy of $100 million or more, or adversely and materially affecting a sector of the economy, productivity, competition, jobs, the environment, public health or safety, or State, local or tribal governments or communities (also known as "economically significant"); (2) creating serious inconsistency or otherwise interfering with an action taken or planned by another agency; (3) materially altering the budgetary impacts of entitlement, grants, user fees, or loan programs; or (4) raising novel legal or policy issues arising out of legal mandates, the President's priorities, or the principles set forth in this Executive Order.

Pursuant to the terms of this Executive Order, EPA has determined that this rule is not "significant" and is therefore not subject to OMB review.

Pursuant to the requirements of the Regulatory Flexibility Act (Pub. L. 96-354, 94 Stat. 1164, 5 U.S.C. 601-612), the Administrator has determined that regulations establishing new tolerances or raising tolerance levels or establishing exemptions from tolerance requirements, or establishing or raising food additive regulations do not have a significant economic impact on a substantial number of small entities. A certification statement to this effect was published in the **Federal Register** of May 4, 1981 (46 FR 24950).

List of Subjects in 40 CFR Part 180

Environmental protection, Administrative practice and procedure, Agricultural commodities, Pesticides and pests, Reporting and recordkeeping requirements.

Dated: October 11, 1994.

Stephen L. Johnson,

Director, Registration Division, Office of Pesticide Programs.

Therefore, it is proposed that 40 CFR part 180 be amended as follows:

PART 180—[AMENDED]

1. The authority citation for part 180 continues to read as follows:

Authority: 21 U.S.C. 346a and 371.

2. By amending § 180.436 in the table therein by revising the entries for the fat, meat, and meat byproducts (mbyp) of cattle and revising the entry for milk, to read as follows:

§ 180.436 Cyfluthrin; tolerances for residues.

* * * * *

Commodity	Parts per million
Cattle, fat	0.40
Cattle, meat	0.40
Cattle, mbyp	0.40
* * * *	*
Milkfat (reflecting 0.08 ppm in whole milk)	2.50
* * * *	*

[FR Doc. 94–26195 Filed 10–20–94; 8:45 am]

BILLING CODE 6560–50–F

40 CFR Part 271

[FRL-5093-2]

Michigan: Final Authorization to Revisions to State Hazardous Waste Management Program

AGENCY: Environmental Protection Agency.

ACTION: Notice of proposed rulemaking and public comment period.

SUMMARY: Michigan has applied for final authorization of revisions to its hazardous waste management program under the Resource Conservation and Recovery Act of 1976, as amended (hereinafter RCRA). The Environmental Protection Agency (EPA) has reviewed Michigan's application and has reached a decision, subject to public review and comment, that these hazardous waste management program revisions satisfy all of the requirements necessary to qualify for final authorization. Thus, EPA intends to approve Michigan's hazardous waste management program revisions. Michigan's application for program revision is available for public review and comment.

DATES: All comments on this proposed rulemaking must be received by 4:30 p.m. central time on November 21, 1994.

ADDRESSES: Copies of the State of Michigan's final Authorization Revision Application are available during normal business hours at the following addresses for inspection and copying: Library of Michigan, Government Documents Section, 717 West Allegan, Lansing, Michigan; Olson Library, Northern Michigan University, Harden Circle Drive, Marquette, Michigan; Ms. Judy Feigler, US EPA Region 5, RCRA Regulatory Development Section, 77 West Jackson, Seventh Floor, Chicago, Illinois. Written comments should be sent to: Ms. Judy Feigler, RCRA Regulatory Development Section (HRM-7J), USEPA, Region 5, 77 West Jackson, Chicago, Illinois.

FOR FURTHER INFORMATION CONTACT: Ms. Judy Feigler, RCRA Regulatory Development Section, at the USEPA address noted above or telephone 312/886-4179.

SUPPLEMENTARY INFORMATION:

A. Background

States with final authorization under section 3006(b) of RCRA, 42 U.S.C. 6929(b) have a continuing obligation to maintain a hazardous waste program that is equivalent to, consistent with, and no less stringent than the Federal hazardous waste management program.

When either EPA's or a State program's controlling statutory or regulatory authority is modified or supplemented, or when certain other changes occur, revisions to State hazardous waste management programs may be necessary. Most commonly, State program revisions are necessitated by changes to EPA's regulations in 40 CFR parts 124, 260 through 268, and 270. The procedures that States and EPA must follow for revision of State programs are found at 40 CFR 271.21.

B. Michigan

The State of Michigan initially received final authorization for its hazardous waste management program effective on October 30, 1986 (51 FR 36804-36805, October 16, 1986). Subsequently, Michigan received authorization for revisions to its program effective on January 23, 1990 (54 FR 225, November 24, 1989), June 24, 1991 (56 FR 18517, April 23, 1991), and November 30, 1993 (58 FR 51244, October 1, 1993).

On November 8, 1991, the Governor of Michigan issued Executive Order 1991-31, which resulted in reorganization of the Michigan Department of Natural Resources (MDNR), the State agency that administers the RCRA program in the State of Michigan. However, the Order did not immediately take effect due to court challenges by the State House of Representatives and environmental groups. A State Supreme Court ruling on September 2, 1993, upheld the Governor's power to organize the executive branch and lifted the stay on the Order, making the Order immediately effective on September 2, 1993.

On March 10 and August 18, 1994, Michigan submitted an application seeking authorization of the revised program. The application consisted of a modified program description, a statement by the Michigan Attorney General, and an addendum to the memorandum of agreement between the State and EPA outlining the policies, responsibilities and procedures under which the program is administered.

EPA has reviewed Michigan's application and has determined that the MDNR's operation of the State hazardous waste management program continued on and after September 2, 1993, without interruption, and the MDNR has continued to act as the lead State agency responsible for administering the program. EPA has also determined that the reorganized MDNR did not result in significant modification of Michigan's hazardous waste management program, nor did the Order transfer any part of the program from the approved State agency to any other State agency. Therefore, EPA does not view the reorganization as a transfer within the purview of § 271.21(c).

Consequently, EPA has made a decision, subject to public review and comment, that Michigan's hazardous waste program, as revised, satisfies all of the requirements necessary to qualify for final authorization. The public may submit written comments on EPA's decision up until November 21, 1994. Copies of Michigan's application are available for inspection and copying at the locations indicated in the **ADDRESSES** section of this notice.

Approval of Michigan's program revision shall become effective when the Regional Administrator's final approval is published in the **Federal Register**. If adverse comment pertaining to Michigan's program revision is received during the comment period, EPA will publish either: (1) A notice of disapproval; or (2) a final rulemaking approving the modifications, which would include appropriate comment response.

If final approval is granted, Michigan will maintain final authorization to operate its hazardous waste management program as revised. MDNR will continue to have responsibility for permitting treatment, storage, and disposal facilities within its borders and carrying out other aspects of the RCRA program, subject to the limitation of its revised program application and previously approved authorities. Michigan also will maintain primary enforcement responsibilities, although EPA retains the right to conduct inspections under section 3007 of RCRA, and to take enforcement actions under sections 3008, 3013 and 7003 of RCRA.

Michigan is not seeking authority to operate the Federal program on Indian lands. This authority will remain with EPA unless provided otherwise in a future statute or regulation.

Compliance with Executive Order 12866

The Office of Management and Budget has exempted this rule from the requirements of section 6 of Executive Order 12866.

Certification Under the Regulatory Flexibility Act

Pursuant to the provisions of 5 U.S.C. 605(b), I hereby certify that this authorization will not have a significant economic impact on a substantial number of small entities, nor will it impose any new burdens on small

entities. This rule, therefore, does not require a regulatory flexibility analysis.

Paperwork Reduction Act

Under the Paperwork Reduction Act, 44 U.S.C. 3501 et seq., Federal agencies must consider the paperwork burden imposed by any information request contained in a proposed rule or a final rule. This rule will not impose any information requirements upon the regulated community.

List of Subjects in 40 CFR Part 271

Environmental protection, Administrative practice and procedure, Confidential business information, Hazardous materials transportation, Hazardous waste, Indian lands, Intergovernmental relations, Penalties, Reporting and recordkeeping requirements, Water pollution control, Water supply.

Authority: This notice is issued under the authority of sections 2002(a), 3006 and 7004(b) of the Solid Waste Disposal Act as amended, 42 U.S.C. 6912(a), 6926, 6974(b).

Dated: September 30, 1994.

Valdas V. Adamkus,

Regional Administrator.

[FR Doc. 94–25919 Filed 10–20–94; 8:45 am]

BILLING CODE 6560–50–P

DEPARTMENT OF COMMERCE

National Oceanic and Atmospheric Administration

50 CFR Part 651

[I.D. 101194D]

Northeast Multispecies Fishery; Public Hearings

AGENCY: National Marine Fisheries Service (NMFS), National Oceanic and Atmospheric Administration (NOAA), Commerce.

ACTION: Notice of intent to prepare a supplemental environmental impact statement (SEIS); request for comments.

SUMMARY: NMFS announces the intention of the New England Fishery Management Council (Council) to prepare an SEIS for proposed Amendment 7 to the Northeast Multispecies Fishery Management Plan (FMP). The most recent Northeast Fisheries Science Center's (NEFSC) Stock Assessment Workshop (SAW 18) for Georges Bank cod and Georges Bank yellowtail flounder recommends that, in order to avert a collapse of cod and improve stock rebuilding for yellowtail, fishing mortality should be reduced to as low a level as possible, approaching zero. In the development of Amendment 7, the Council proposes to adopt the SAW's recommendation and consider all options in meeting this objective while addressing the issue of displacement of fishing effort. The Council also announces a continuing public process to determine the scope of issues under consideration. The purpose of this document is to inform the public of this process and of the opportunity to participate in the further development of Amendment 7 to the FMP. All persons affected by, or otherwise interested in, the proposed amendment are invited to participate in determining the scope of significant issues to be considered in the SEIS by submitting written comments. The scoping process also will identify and eliminate issues that are not significant from detailed study.

DATES: The Council and its Groundfish Oversight Committee will discuss Amendment 7 at regularly scheduled meetings. The public will be notified (by **Federal Register** notice) of the specific agendas and starting times at least 2 weeks prior to Council meetings. The currently scheduled meetings are as follows:

1. October 14, 1994, 9:30 a.m, Groundfish Committee, Boston, MA
2. October 26–27, 1994, Council, Danvers, MA
3. December 7–8, 1994, Council, Danvers, MA

ADDRESSES: Send written comments on the scoping process and scope of the SEIS to Douglas G. Marshall, Executive Director, New England Fishery Management Council, 5 Broadway, Saugus, MA 01906-1097.

The meetings will be held at the following locations:

1. Boston—Captain John Foster Williams Coast Guard Building, 408 Atlantic Avenue, Boston, MA 02202
2. Danvers—King's Grant Inn, Route 128 & Trask Lane, Danvers, MA 01923
3. Danvers—King's Grant Inn, Route 128 & Trask Lane, Danvers, MA 019230

As additional meetings are scheduled, they will be announced by notice in the **Federal Register**. Public hearings will be scheduled after completion of the Draft SEIS; notice of the hearings will be published in the **Federal Register**.

FOR FURTHER INFORMATION CONTACT: Douglas G. Marshall, Executive Director, 617-231-0422.

SUPPLEMENTARY INFORMATION: Many of the New England multispecies stocks are over-exploited and at extremely low levels of abundance. Scientists believe that cod, haddock and yellowtail flounder, the three main species making up the Northeast multispecies stock group, are near or at the point of collapse. Under such conditions, the fishery can expect a prolonged period during which landings from the resource are substantially below their long-term potential. Due to the reduced spawning stock size, the probability is low that sufficient numbers of fish will be produced to replace those being removed, further jeopardizing or delaying stock recovery.

Amendment 5 to the FMP was implemented on March 1, 1994 (59 FR 9872), and was intended to eliminate overfishing through an incremental effort-reduction program, mesh-size increase, expanded spawning area closures and other measures. When the Council adopted objectives for the amendment more than 3 years ago, cod, haddock, and yellowtail flounder stocks were being fished at a rate that was on average twice what could be sustained over the long term, so it designed a plan to reduce fishing effort by half.

In the fall of 1993, NMFS informed the Council that the condition of the Georges Bank haddock stock was deteriorating and in need of more protection than was provided by Amendment 5. NMFS implemented emergency regulations on January 3, 1994 (59 FR 26), which essentially limited the possession limit of haddock to 500 lb (226.8 kg) and extended the time and area closure for Closed Area II, and subsequently prepared and implemented these measures on a permanent basis under Amendment 6 (59 FR 32134, June 22, 1994).

During the Amendment 5 development and implementation period, fishing mortality rates increased and the downward trends in stock size and yields continued. The recent stock assessment from the NEFSC (SAW 18) addresses the status of Georges Bank cod and yellowtail flounder stocks and concludes that Amendment 5 is clearly inadequate to achieve the reductions in fishing mortality rates needed to allow for appreciable stock rebuilding. Further, SAW 18 advises that fishing mortality levels need to be reduced to as low a level as possible, approaching zero, in order to avert a collapse of cod and improve the prospects of stock rebuilding for yellowtail flounder. This assessment coupled with the severely depleted condition of the haddock stock and similar advice from the NEFSC (SAW 17) concerning Southern New England yellowtail, presents an alarming picture of the overall status of the New England multispecies fishery. Thus, even though the effort reductions required by Amendment 5 are very restrictive, they are insufficient. The

Council now intends to prevent an even worse scenario for the multispecies resource by severely reducing fishing effort sooner and perhaps by more than what is required by Amendment 5.

The Council voted at its September 21–22, 1994 meeting to recommend that the Groundfish Committee (Committee) immediately begin the development of an amendment to the FMP to implement the recommendations of SAWs 17 and 18 for severely depleted groundfish stocks including Georges Bank yellowtail flounder, Southern New England yellowtail flounder, haddock, Georges Bank cod, and others as needed. Also, the Council voted that the Committee needs to consider all available options in meeting this objective while ensuring that in the Committee's analysis, consideration of fishing effort displacement into other fisheries and other groundfish fisheries is taken into account. The range of measures include, but is not limited to, a closure of all fisheries capable of catching multispecies and those fisheries not protected from effort displacement resulting from this closure, a closure of very large areas in the Northwest Atlantic for long periods of time, prohibitions or limitations on the use of specific gear types capable of catching multispecies, selective gear requirements such as increased mesh size or square mesh, limits on total allowable catch and/or individual vessel catch, and increased limits on vessel days at sea.

The Council expects that regulations sufficient to implement the recommendations of the NEFSC stock assessment advisors will have significant economic and social impacts. The Council recognizes that these impacts will extend beyond the individuals, families, and communities that principally depend on multispecies and will affect other fisheries in the region due to the displacement of fishing effort caused by the regulations or through possible restrictions on the incidental catch of multispecies in those other fisheries. For this reason the Council has determined that it will prepare an SEIS.

Authority: 16 U.S.C. 1801 *et seq.*

Dated: October 17, 1994.

Joe P. Clem,

Acting Director, Office of Fisheries Conservation and Management, National Marine Fisheries Service.

[FR Doc. 94–26158 Filed 10–20–94; 8:45 am]

BILLING CODE 3510-22-F

Notices

Federal Register
Vol. 59, No. 203
Friday, October 21, 1994

This section of the FEDERAL REGISTER contains documents other than rules or proposed rules that are applicable to the public. Notices of hearings and investigations, committee meetings, agency decisions and rulings, delegations of authority, filing of petitions and applications and agency statements of organization and functions are examples of documents appearing in this section.

DEPARTMENT OF AGRICULTURE

Forest Service

Helicopter Landing Tours on the Juneau Icefields, Tongass National Forest, Chatham Area, Juneau Ranger District, Juneau, AK

AGENCY: Forest Service, USDA.

ACTION: Notice of intent to prepare an environmental impact statement.

SUMMARY: The Department of Agriculture, Forest Service will prepare an Environmental Impact Statement (EIS) to disclose the environmental impacts of authorizing helicopter landing tours on icefields adjacent to the city of Juneau, Alaska. The proposed action is to issue five year special use permits (1995–1999) authorizing Coastal Helicopter, Inc., ERA Helicopters, Inc. and Temsco Helicopter, Inc. to land on the Juneau icefields at specified locations and conduct tours. The majority of use would occur between May and September of each year. Tours would originate at private heliports and helicopter flightpaths would transit a variety of private and municipal lands prior to entering the National Forest. The proposed action would increase authorized helicopter landings tours on the Juneau icefields from 11,000 in 1994 to a maximum of 22,000 in 1999.

The Forest Service is seeking information and comments from Federal, State and local agencies as well as individuals and organizations who may be interested in, or affected by, the proposed action.

DATES: Comments concerning the scope of the analysis should be received in writing by October 21, 1994.

ADDRESSES: Send written comments or requests for additional information to John Favro, Recreation Staff Officer, Juneau Ranger District, 8465 Old Dairy Road, Juneau, Alaska 99801, (907) 586–8800

SUPPLEMENTARY INFORMATION: The purpose and need for the proposed action is to meet public demand for quality guided services which provide safe access to remote locations on the Juneau Icefield. Meeting this demand includes providing for visitor safety and an appropriate balance between commercial guided recreation opportunities and non-commercial, non-guided recreation opportunities without unacceptable impacts to other forest users and resources.

Kenneth E. Mitchell, Juneau District Ranger, Tongass National Forest, Chatham Area, is the deciding official. The decision to be made is whether or not to issue special use permits for helicopter landing tours as requested, and if permits are issued, decide the levels to be authorized and the mitigation measures that will be required.

The no action and proposed action alternatives will be considered in the EIS as well as other alternatives which address significant issues and satisfy the purpose and need for the action. Alternatives may consider limiting the number of landings, moving heliports, or defining flight paths.

Preliminary issues that have been identified include helicopter noise disturbance to residential areas, wildlife, and ground-based recreation users; impacts to the local economy; and public demand for helicopter landing tours.

In 1992, an environmental assessment analyzing the effects of these tours was completed. A Finding of No Significant Impact was made. That decision was reversed on appeal and remanded to the deciding official.

Comments from the 1992 EA were used to identify issues for this EIS. Comments were also solicited between May 17 and June 27, 1994 through a news release and letters to the public. Federal, state and local agencies, interested individuals and groups are invited to participate in this analysis. Comments will be accepted throughout the EIS process but, to be most useful, should be received by October 21, 1994.

Because most of the data collection and scoping was completed during preparation of the 1992 EA and subsequent re-evaluation of the original proposed action, the draft environmental impact statement should be available for review by November 5, 1994. The final environmental impact statement is scheduled to be completed by January 15, 1995.

The comment period on the draft environmental impact statement will be 45 days from the date the Environmental Protection Agency publishes the notice of availability in the **Federal Register.**

The Forest Service believes, at this early stage, it is important to give reviewers notice of several court rulings related to public participation in the environmental review process. First, reviewers of draft environmental impact statements must structure their participation in the environmental review of the proposal so that it is meaningful and alerts an agency to the reviewer's position and contentions. *Vermont Yankee Nuclear Power Corp.* v *NRDC*, 435 U.S. 519, 553 (1978). Also, environmental objections that could be raised at the draft environmental impact statement stage but that are not raised until after the completion of the final environmental impact statement may be waived or dismissed by the courts. *City of Angoon* v. *Hodel*, 803 F.2d 1016, 1022 (9th Cir. 1986) and *Wisconsin Heritages, Inc.* v. *Harris*, 490 F. Supp. 1334, 1338 (E.D. Wis. 1980). Because of these court rulings, it is very important that those interested in this proposed action participate by the close of the 45 day comment period so that substantive comments and objections are made available to the Forest Service at a time when it can meaningfully consider them and respond to them in the final environmental impact statement. To assist the Forest Service in identifying and considering issues and concerns on the proposed action, comments on the draft environmental impact statement should be as specific as possible. It is also helpful if comments refer to specific pages or chapters of the draft statement. Comments may also address the adequacy of the draft environmental impact statement or the merits of the alternatives formulated and discussed in the statement. Reviewers may wish to refer to the Council on Environmental Quality Regulations for implementing the procedural provisions of the National Environmental Policy Act at 40 CFR 1503.3 in addressing these points.

The Final EIS and Record of Decision is expected to be released in January 1995. The Juneau District Ranger, Chatham Area. Tongass National Forest

will, as the responsible official for the EIS, make a decision regarding this proposal considering the comments, responses, and environmental consequences discussed in the Final EIS, and applicable laws, regulations, and policies. The decision and supporting reasons will be documented in the Record of Decision.

Dated: September 29, 1994.

Kenneth E. Mitchell,

District Manager.

[FR Doc. 94–26116 Filed 10–20–94; 8:45 am]

BILLING CODE 3410–11–M

DEPARTMENT OF COMMERCE

International Trade Administration

[A–588–806]

Final Results of Antidumping Duty Administrative Reviews: Electrolytic Manganese Dioxide From Japan

AGENCY: Import Administration, International Trade Administration, Department of Commerce.

EFFECTIVE DATE: October 21, 1994.

FOR FURTHER INFORMATION CONTACT: Erik Warga or Dorothy Tomaszewski, Office of Antidumping Investigations, Import Administration, International Trade Administration, U.S. Department of Commerce, Washington, DC 20230; telephone: (202) 482–0922 and (202) 482–0631, respectively.

SUMMARY: In response to requests by the petitioners, the Department of Commerce ("the Department") has conducted administrative reviews of the antidumping duty order on electrolytic manganese dioxide ("EMD") from Japan. The reviews cover one manufacturer/exporter of this merchandise to the United States, Tosoh Corporation ("TOSOH"), during the periods April 1, 1991, through March 31, 1992, April 1, 1992, through March 31, 1993.

The Department has completed these reviews and has determined that respondent's dumping margin should be based on best information available ("BIA") for the 1991–1992 and 1992–1993 reviews. The margin for this manufacturer/exporter is 77.43 percent for the 1991–1992 and 1992–1993 periods.

SUPPLEMENTARY INFORMATION:

Background

On April 13, 1994, and July 8, 1994, the Department published the **Federal Register** notices of the preliminary results of its administrative reviews for the periods April 1, 1992, through March 31, 1993 (59 FR 17511), and April 1, 1991, through March 31, 1992 (59 FR 35096), respectively. The Department gave interested parties an opportunity to comment on the preliminary results. We received a comment from petitioners, Kerr-McGee Chemical Corporation and Chemetals Incorporated, on July 20, 1994, relating to the 1992–1993 review. TOSOH did not comment on either the 1991–1992 review or the 1992–1993 review. The Department has completed these reviews in accordance with section 751 of the Tariff Act of 1930, as amended (the Act).

Scope of Reviews

Imports covered by these reviews are shipments of electrolytic manganese dioxide. EMD is manganese dioxide (MnO_2) that has been refined in an electrolysis process. During the review periods, such merchandise was classifiable under subheading 2820.10.0000 of the *Harmonized Tariff Schedule* (HTS). The HTS subheading is provided for convenience and customs purposes. The written description remains dispositive.

On January 6, 1992, the Department published a final scope ruling, *Electrolytic Manganese Dioxide from Japan; Final Scope Ruling* (57 FR 395, January 6, 1992), in which it affirmed that high-grade chemical manganese dioxide (CMD–U) is a "later-developed product" and is included in the scope of the order on EMD from Japan. For a detailed discussion of that ruling, *see Electrolytic Manganese Dioxide from Japan; Preliminary Scope Ruling* (56 FR 56977, November 7, 1991).

These reviews cover EMD sales to the United States by one manufacturer/exporter, TOSOH.

Interested Party Comment

Comment

Petitioners request confirmation in the context of the 1992–1993 review that any subsequent review involving TOSOH's shipments of the subject merchandise will include an inquiry into the correct basis for U.S. prices of reviewed transactions. Specifically, petitioners request that the Department confirm that it will make a determination in a future review as to whether the price to test against fair value is TOSOH's price to its customer, Mitsubishi Corporation ("Mitsubishi"), or the price that Mitsubishi charges to its customer in the United States.

DOC Position

It is not appropriate for the Department to speculate on the resolution of issues that are not relevant to the instant proceeding. Although petitioners argued that Mitsubishi's prices to its customer should be the basis for U.S. price, this issue did not need to be addressed in the 1992–1993 proceeding because TOSOH did not participate. Whether, in subsequent review periods, the Department will examine TOSOH's relationship with Mitsubishi is a matter to be decided in those proceedings should the issue be raised.

Final Results of the Reviews

TOSOH declined to respond to section D of the Department's questionnaire in the 1991–1992 review. TOSOH also did not respond to any part of the Department's questionnaire in the 1992–1993 review. Pursuant to section 776(c) of the Act, whenever a company refuses to produce information requested or otherwise significantly impedes an investigation, the Department will use BIA.

Because TOSOH refused, in both reviews, to respond to the Department's questionnaire, we consider it to be an uncooperative respondent. Our practice for uncooperative respondents is to apply as BIA the higher of (1) the highest of the rates found for any firm in the less-than-fair value ("LTFV") investigation or prior administrative reviews, or (2) the highest rate found in the current review for any firm. *See Final Results of Administrative Review: Antifriction Bearings (other than Tapered Roller Bearings) from France* (58 FR 39729, 39739, July 26, 1993).

Accordingly, for both reviews, we used as BIA the highest of the rates found for any firm in the original LTFV investigation: 77.43 percent *(See Final Determination of the Sales at Less Than Fair Value: Electrolytic Manganese Dioxide from Japan* (54 FR 8778, March 2, 1989)).

As a result of these reviews, we determine that the following margins exist for each review period:

Manufacturer/ Exporter	Time period	Margin (percent)
TOSOH	4/1/91–3/31/92	77.43
TOSOH	4/1/92–3/31/93	77.43

The Department will instruct the Customs Service to assess antidumping duties on all appropriate entries for each period of review. Individual differences between United States price and foreign market value may vary from the percentage stated above. The Department will issue appraisement instructions directly to the Customs Service.

Furthermore, the deposit requirements will be effective for all shipments of the subject merchandise, entered, or withdrawn from warehouse, for consumption on or after the publication date of the final results of these administrative reviews, as provided by section 751(a)(1) of the Act. A cash deposit of estimated antidumping duties based on margins for the most recent period of April 1, 1992, through March 31, 1993, shall be required on all shipments of subject merchandise from Japan, as follows:

(1) The cash deposit rate for the reviewed company will be that established in the final results of the 1992–1993 administrative review;

(2) For previously reviewed or investigated companies not listed above, the cash deposit rate will continue to be the company-specific rate published for the most recent period;

(3) If the exporter is not a firm covered in the 1992–1993 review, a prior review, or the original LTFV investigation, but the manufacturer is, the cash deposit rate will be the rate established for the most recent period for the manufacturer of the merchandise; and

(4) If neither the exporter nor the manufacturer is a firm covered in the 1992–1993 review, any previous review conducted by the Department, or the original LTFV investigation, the cash deposit rate will be the "all other" rate established in the LTFV investigation of 73.30 percent. See the *Final Results of Antidumping Duty Administrative Review: Gray Portland Cement and Clinker from Japan* 58 FR 48826, 48833, (September 20, 1993), for a further discussion of the Department's practice in setting the all others rate.

These deposit requirements, when imposed, shall remain in effect until publication of the final results of the next administrative review.

This notice also serves as a final reminder to importers of their responsibility under 19 CFR 353.26 to file a certificate regarding the reimbursement of antidumping duties prior to liquidation of the relevant entries during these review periods. Failure to comply with this requirement could result in the Secretary's presumption that reimbursement of antidumping duties occurred and the subsequent assessment of double antidumping duties.

This notice also serves as the only reminder to parties subject to administrative protective order (APO) of their responsibility concerning disposition of proprietary information disclosed under APO in accordance with 19 CFR 353.34(d). Timely written notification of return/destruction of APO materials or conversion to judicial protective order is hereby requested. Failure to comply with the regulations and terms of the APO is a sanctionable violation.

These administrative reviews and notice are in accordance with section 751(a)(1) of the Act (19 U.S.C. 1675(a)(1)) and 19 CFR 353.22.

Dated: October 5, 1994.

Susan G. Esserman,

Assistant Secretary for Import Administration.

[FR Doc. 94–26203 Filed 10–20–94; 8:45 am]

BILLING CODE 3510–DS–M

[A–351–605]

Frozen Concentrated Orange Juice From Brazil; Final Results of Antidumping Duty Administrative Review and Revocation of Order in Part

AGENCY: Import Administration, International Trade Administration, Department of Commerce.

ACTION: Notice of final results of antidumping duty administrative review and revocation in part.

SUMMARY: On February 3, 1994, the Department of Commerce (the Department) published the preliminary results of its administrative review of the antidumping duty order on frozen concentrated orange juice (FCOJ) from Brazil, and its intent to revoke the order in part (59 FR 5174). We have now completed this review and determined the margins for Branco Peres, Citropectina, and Frutropic to be zero or *de minimis* during the period May 1, 1991 through April 30, 1992. We have also determined that Frutropic has met the requirements for revocation.

EFFECTIVE DATE: October 21, 1994.

FOR FURTHER INFORMATION CONTACT: Stephen Lebowitz or Kelly Parkhill, Office of Countervailing Compliance, Import Administration, International Trade Administration, U.S. Department of Commerce, 14th Street and Constitution Avenue NW., Washington, DC 20230; telephone: (202) 482–2786.

SUPPLEMENTARY INFORMATION:

Background

On May 5, 1987, the Department published in the **Federal Register** an antidumping duty order on FCOJ from Brazil (52 FR 16424). On May 31, 1992, pursuant to the Department's notice of "Opportunity to Request Administrative Review" (57 FR 19412) of the order for the period May 1, 1991 through April 30, 1992, Branco Peres, Citropectina, and Frutropic requested an administrative review. Accordingly, the Department initiated this administrative review on June 18, 1992 (57 FR 27212).

On May 29, 1992, Frutropic submitted a timely request for revocation of the antidumping duty order, accompanied by the certification required by 19 CFR 353.25(b)(1). Frutropic did not submit an agreement to immediate reinstatement of the order under 19 CFR 353.25(a)(2)(iii). Frutropic claimed that it was not required to do so because Frutropic was not originally investigated and had never been found to have sold at less than foreign market value (FMV) in any administrative review.

On February 3, 1994, the Department published the preliminary results of its administrative review and its intent to revoke the order in part (59 FR 51174). We gave interested parties an opportunity to comment on the preliminary results. No comments were received.

In the preliminary results of this review, we erroneously stated that FMV periods of less than one month were used because distortions could result from the application of a monthly FMV due to hyperinflation. In fact, shorter periods were used to avoid distortions which would have been created through the use of a monthly FMV due to significant price fluctuations unrelated to hyperinflation. The Department has now completed this administrative review in accordance with section 751 of the Tariff Act of 1930, as amended (the Act).

Scope of Review

Imports covered by the administrative review are shipments of FCOJ from Brazil. The merchandise is currently classifiable under item 2009.11.00 of the *Harmonized Tariff Schedule* (HTS). The HTS item number is provided for convenience and Customs purposes. The written description remains dispositive.

Final Results of the Review

The final results of our review are identical to those in the preliminary results of review:

Manufacturer/ Exporter	Time period	Margin (percent)
Branco Peres	5/1/91–4/30/92	0.03
Citropectina	5/1/91–4/30/92	0
Frutropic	5/1/91–4/30/92	0

The Department hereby revokes the antidumping duty order with respect to Frutropic, as it has demonstrated three

consecutive years of sales at not less than FMV, and it is not likely that Frutropic will sell subject merchandise at less than FMV in the future. As required by 19 CFR 353.25(c)(2)(ii), the Department has conducted a verification of all factual information submitted by Frutropic in this administrative review.

We have also examined Frutropic's claim that it is not required to file an agreement under 19 CFR 353.25(a)(2)(iii). Section 353.35(a)(2)(iii) states that:

> For producers or resellers that the Secretary previously has determined to have sold the merchandise at less than foreign market value, the producers or resellers agree in writing to their immediate reinstatement in the order, as long as any producer or reseller is subject to the order, if the Secretary concludes under section 353.22(f) that the producer or reseller, subsequent to the revocation, sold the merchandise at less than foreign market value.

As Frutropic was not originally investigated and has not been found to have sold at less than FMV in the first administrative review or in any of the other years in which the company was reviewed, we determine that Frutropic has not sold the merchandise at less than FMV for purposes of 19 CFR 353.25(a)(2)(iii), and is not required to submit an agreement to immediate reinstatement in the order. The Department is, therefore, revoking the order with respect to Frutropic.

However, if the Department concludes from available information that changed circumstances sufficient to warrant a review exist with respect to exports of FCOJ from Frutropic, the Department will initiate a changed circumstances antidumping administrative review under 19 CFR 353.22(f). Further, if as a result of this changed circumstances review, the Department concludes that, subsequent to revocation, Frutropic sold the subject merchandise at less-than-fair-value (LTFV), the Department will reinstate the order with respect to Frutropic.

The Department will instruct the U.S. Customs Service to assess antidumping duties on all appropriate entries. With respect to Frutropic's entries, the Department will instruct Customs to terminate suspension of liquidation, to liquidate all entries without regard to antidumping duties and to cease collecting cash deposits. Since the margins for Branco Peres and Citropectina are *de minimis* and zero, respectively, the Department shall not require a cash deposit of antidumping duties on entries of FCOJ from these companies.

Furthermore, the following deposit requirements will be effective upon publication of this notice of final results of administrative review for all shipments of the subject merchandise, entered or withdrawn from warehouse, for consumption on or after the publication date, as provided for by section 751(a)(1) of the Act: (1) the cash deposit rate for the reviewed companies will be as outlined above; (2) for previously reviewed or investigated companies not listed above, the cash deposit rate will continue to be the company-specific rate published for the most recent period; (3) if the exporter is not a firm covered in this review, a prior review, or the original LTFV investigation, but the manufacturer is, the cash deposit rate will be the rate established for the most recent period for the manufacture of the merchandise; (4) the cash deposit rate for all other manufacturers or exporters will be 1.96 percent, the "all other" rate established in the original LTFV investigation by the Department (52 FR 9324, March 17, 1989), in accordance with the decisions of the Court of International Trade in *Floral Trade Council* v. *United States*, Slip Op. 993–79, and *Federal-Mogul Corporation* v. *United States*, Slip Op. 93–83.

This notice serves as a final reminder to importers of their responsibility under 19 CFR 353.26 to file a certificate regarding the reimbursement of antidumping duties prior to liquidation of the relevant entries during this review period. Failure to comply with this requirement could result in the Secretary's presumption that reimbursement of antidumping duties occurred and the subsequent assessment of double antidumping duties.

This notice serves as the only reminder to parties subject to administrative protective order (APO) of their responsibilities concerning the return or destruction of proprietary information disclosed under APO in accordance with 19 CFR 353.34(d). Failure to comply is a violation of the APO. This administrative review and notice are in accordance with sections 751(a)(1)(B) of the Act (19 U.S.C. 1675(a)(1)(B)) and 19 CFR 353.22 and 353.25.

Dated: October 11, 1994.

Susan G. Esserman,

Assistant Secretary for Import Administration.

[FR Doc. 94–26204 Filed 10–20–94; 8:45 am]

BILLING CODE 3510–DS–M

THE COMMISSION ON THE SOCIAL SECURITY NOTCH ISSUE

Notice of Public Hearings and Requests for Written Statements

AGENCY: The Commission on the Social Security "Notch" Issue.

ACTION: Notice of hearings.

SUMMARY: The Commission on the Social Security "Notch" Issue was established by the Treasury, Postal Service, and General Government Appropriations Act of Fiscal Year 1993 (Public Law 102–393, September 10, 1992).

BACKGROUND: The legislation adopted in 1972 to provide for automatic cost of living adjustments (COLA's) in social security benefits contained a flawed formula for determining benefits which resulted in higher benefits than intended. In 1977, Congress enacted legislation to remove this flaw. The new law was effective for all beneficiaries born after 1916 and the resulting benefit modification for those born for several years after that date created what has become known as the "Notch" issue.

DATES: The Commission on the Social Security "Notch" Issue will hold the following public hearings: Tuesday, November 15, 1994, at 9:00 a.m. in room 111 of the Federal Office Building located at 601 East 12th Street, Kansas City, Missouri; Thursday, November 17, 1994, at 9:00 a.m. in the Metropolitan II room, on the second level of the ANA Hotel, located at 50 Third Street, San Francisco, California.

Any questions regarding Commission hearings should be directed to the Commission Staff, 202–336–8730.

SUPPLEMENTARY INFORMATION: *Requests* to present oral or written testimony at the hearings must be made by telephone to Karen Norrell or Ruth Anne Miller at 202–336–8730 before close of business November 4, 1994. The Notch Commission staff will notify those scheduled to appear. Fifteen copies of the oral testimony must be *submitted* to the Commission staff by November 8, 1994. Testimony should be mailed or delivered to 1100 New York Ave., 10th floor, East Tower, Washington, DC 20005. Those presenting oral testimony must also submit 25 copies of their testimony at the hearing. Witnesses scheduled to present oral testimony are requested to briefly summarize their written statements. In view of the limited time available to hear witnesses, the staff may not be able to accommodate all requests to be heard. However, written testimony is welcome.

Any persons or organizations wishing to submit written testimony for the

printed record of the hearings should submit 15 copies of their statement by Wednesday, November 30, 1994. Copies should be mailed to the Commission on the Social Security "Notch" Issue, 1100 New York Ave., NW., 10th floor, East Tower, Washington, DC 20005.

FOR FURTHER INFORMATION CONTACT: Karen Norrell, 202–336–8730.

Authority: Public Law 102–393, September 10, 1992.

Alan K. Campbell,

Chairman.

[FR Doc. 94–26117 Filed 10–20–94; 8:45 am]

BILLING CODE 4150–04–M

COMMITTEE FOR THE IMPLEMENTATION OF TEXTILE AGREEMENTS

Re-establishment of Import Restraint Limits and Guaranteed Access Levels, Re-instatement of Export Visa, Certification and Manufacturer's Identification Requirements for Certain Cotton, Wool, Man-Made Fiber, Silk Blend and Other Vegetable Fiber Textile Products Produced or Manufactured in Haiti

October 18, 1994.

AGENCY: Committee for the Implementation of Textile Agreements (CITA).

ACTION: Issuing a directive to the Commissioner of Customs re-establishing limits and guaranteed access levels, re-instating export visa, certification and manufacturer's identication requirements.

EFFECTIVE DATE: October 21, 1994.

FOR FURTHER INFORMATION CONTACT: Naomi Freeman, International Trade Specialist, Office of Textiles and Apparel, U.S. Department of Commerce, (202) 482–4212. For information on the quota status of these limits, refer to the Quota Status Reports posted on the bulletin boards of each Customs port or call (202) 927–5850. For information on embargoes and quota re-openings, call (202) 482–3715.

SUPPLEMENTARY INFORMATION:

Authority: Executive Order 11651 of March 3, 1972, as amended; section 204 of the Agricultural Act of 1956, as amended (7 U.S.C. 1854).

On February 1, 1994 a notice and letter to the Commissioner of Customs dated January 26, 1994 were published in the **Federal Register** (59 FR 4693) announcing the establishment of limits and guaranteed access levels (GALs), re-instatement of visa and certifications requirements and establishment of manufacturer's identification requirements for certain textiles and textile products, produced or manufactured in Haiti and exported during the period beginning on January 1, 1994 and extending through December 31, 1994.

Based on Executive Order 12917, the Chairman of CITA issued a directive to the Commissioner of Customs cancelling the directive issued on January 26, 1994 (59 FR 35325, published on July 11, 1994 and 59 FR 44410, published on August 29, 1994).

In the letter published below, the Chairman of CITA, directs the Commissioner of Customs to re-establish the limits and guaranteed access levels for 1994. Also, the Commissioner of Customs is directed to re-instate the visa, certifications and manufacturer's identification requirements for certain textiles and textile products which are exported from Haiti. Goods exported from Haiti during the period October 21, 1994 through November 20, 1994 shall not be denied entry for lack of a visa or certification. Goods exported from Haiti on or after November 21, 1994 shall be denied entry if not accompanied by an appropriate export visa or certification. The Commissioner of Customs is directed to accept and sign the ITA–370P form for shipments of U.S. formed and cut parts destined for assembly in Haiti and re-entry into the United States under the Special Access Program.

Shipments of GAL qualifying textile products which are re-exported to the United States from Haiti on or after October 21, 1994 shall be charged to the appropriate guaranteed access level.

A description of the textile and apparel categories in terms of HTS numbers is available in the CORRELATION: Textile and Apparel Categories with the Harmonized Tariff Schedule of the United States (see **Federal Register** notice 58 FR 62645, published on November 29, 1993). Also see 56 FR 51201, published on October 10, 1991.

Requirements for participation in the Special Access Program are available in **Federal Register** notices 51 FR 21208, published on June 11, 1986; 52 FR 6053, published on February 27, 1987; 52 FR 26057, published on July 10, 1987; and 54 FR 50425, published on December 6, 1989.

The letter to the Commissioner of Customs and the actions taken pursuant to it are not designed to implement all of the provisions of the Memorandum of Understanding dated December 30, 1993 between the Governments of the United States and Haiti, but are designed to assist only in the implementation of certain of its provisions.

Rita D. Hayes,

Chairman, Committee for the Implementation of Textile Agreements.

Committee for the Implementation of Textile Agreements

October 18, 1994.

Commissioner of Customs,
Department of the Treasury, Washington, DC 20229.

Dear Commissioner: This directive cancels and supersedes the monitoring directives dated December 3, 1992 and December 8, 1993, and the July 5, 1994 (as corrected on August 23, 1994), directive prohibiting the importation of any textile or apparel products from Haiti, issued to you by the Chairman, Committee for the Implementation of Textile Agreements.

Under the terms of section 204 of the Agricultural Act of 1956, as amended (7 U.S.C. 1854); pursuant to the Memorandum of Understanding dated December 30, 1993, between the Governments of the United States and Haiti; and in accordance with the provisions of Executive Order 11651 of March 3, 1972, as amended, you are directed, effective on October 21, 1994, to re-establish the following limits for cotton and man-made fiber textile products in the following categories, produced or manufactured in Haiti and exported during the twelve-month period beginning on January 1, 1994 and extending through December 31, 1994:

Category	Twelve-month restraint limit [1]
331	504,990 dozen pairs.
340/640	504,990 dozen.
341/641	484,791 dozen.
347/348	568,114 dozen.
350	69,436 dozen.

[1] The limits have not been adjusted to account for any imports exported after December 31, 1993.

Effective on October 21, 1994, you are directed to re-instate visa, certification and manufacturer identification requirements for all shipments of textile products, produced or manufactured in Haiti and exported from Haiti. Goods exported from Haiti during the period October 21, 1994 through November 20, 1994 shall not be denied entry for lack of a visa or certification. Goods exported from Haiti on or after November 21, 1994 shall be denied entry if not accompanied by an appropriate export visa or certification.

You are directed to accept and sign the ITA–370P form for shipments of U.S. formed and cut parts destined for assembly in Haiti and re-entry into the United States under the Special Access Program.

In accordance with the provisions of the Special Access Program, as set forth in 51 FR 21208 (June 11, 1986), 52 FR 26057 (July 10, 1987) and 54 FR 50425 (December 6, 1989), and pursuant to current bilateral textile agreement, as amended, between the Governments of the United States and Haiti, you are directed, effective on October 21, 1994, to re-establish guaranteed access levels for properly certified cotton and man-made

fiber textile products in the following categories which are assembled in Haiti from fabric formed and cut in the United States and re-exported to the United States from Haiti during the twelve-month period beginning on January 1, 1994 and extending through December 31, 1994.

Category	Guaranteed access level
331	500,000 dozen pairs.
340/640	440,000 dozen.
341/641	400,000 dozen.
347/348	800,000 dozen.
350	120,000 dozen.

Any shipment for entry under the Special Access Program which is not accompanied by a valid and correct certification and Export Declaration in accordance with the provisions of the certification requirements established in the directive of February 19, 1987, as amended, shall be denied entry unless the Government of Haiti authorizes the entry and any charges to the appropriate specific limit. Any shipment which is declared for entry under the Special Access Program but found not to qualify shall be denied entry into the United States.

In carrying out the above directions, the Commissioner of Customs should construe entry into the United States for consumption to include entry for consumption into the Commonwealth of Puerto Rico.

The Committee for the Implementation of Textile Agreements has determined that these actions fall within the foreign affairs exception of the rulemaking provisions of 5 U.S.C. 553(a)(1).

Sincerely,

Rita D. Hayes,

Chairman, Committee for the Implementation of Textile Agreements.

[FR Doc. 94–26247 Filed 10–20–94; 8:45 am]

BILLING CODE 3510–DR–F

Adjustment of an Import Limit for Certain Silk Blend and Other Vegetable Fiber Textile Products Produced or Manufactured in the People's Republic of China

October 18, 1994.

AGENCY: Committee for the Implementation of Textile Agreements (CITA).

ACTION: Issuing a directive to the Commissioner of Customs increasing a limit.

EFFECTIVE DATE: October 25, 1994.

FOR FURTHER INFORMATION CONTACT: Jennifer Aldrich, International Trade Specialist, Office of Textiles and Apparel, U.S. Department of Commerce, (202) 482–4212. For information on the quota status of this limit, refer to the Quota Status Reports posted on the bulletin boards of each Customs port or call (202) 927–6703. For information on embargoes and quota re-openings, call (202) 482–3715.

SUPPLEMENTARY INFORMATION:

Authority: Executive Order 11651 of March 3, 1972, as amended; section 204 of the Agricultural Act of 1956, as amended (7 U.S.C. 1854).

The current limit for Category 870 is being increased for carryforward. As a result, the limit for Category 870, which is currently filled, will re-open.

A description of the textile and apparel categories in terms of HTS numbers is available in the CORRELATION: Textile and Apparel Categories with the Harmonized Tariff Schedule of the United States (see **Federal Register** notice 58 FR 62645, published on November 29, 1993). Also see 59 FR 3847, published on January 27, 1994.

The letter to the Commissioner of Customs and the actions taken pursuant to it are not designed to implement all of the provisions of the MOU dated January 17, 1994, but are designed to assist only in the implementation of certain of its provisions.

Rita D. Hayes,

Chairman, Committee for the Implementation of Textile Agreements.

Committee for the Implementation of Textile Agreements

October 18, 1994.

Commissioner of Customs,

Department of the Treasury, Washington, DC 20229.

Dear Commissioner: This directive amends, but does not cancel, the directive issued to you on January 24, 1994, by the Chairman, Committee for the Implementation of Textile Agreements. That directive concerns imports of certain cotton, wool, man-made fiber, silk blend and other vegetable fiber textile products, produced or manufactured in the People's Republic of China and exported during the twelve-month period which began on January 1, 1994 and extends through December 31, 1994.

Effective on October 25, 1994, you are directed to amend further the directive dated January 24, 1994 to increase the limit for Category 870 to 31,159,615 kilograms [1], as provided under the terms of the Memorandum of Understanding dated January 17, 1994 between the Governments of the United States and the People's Republic of China.

The Committee for the Implementation of Textile Agreements has determined that this action falls within the foreign affairs exception to the rulemaking provisions of 5 U.S.C. 553(a)(1).

[1] The limit has not been adjusted to account for any imports exported after December 31, 1993.

Sincerely,

Rita D. Hayes,

Chairman, Committee for the Implementation of Textile Agreements.

[FR Doc. 94–26246 Filed 10–20–94; 8:45 am]

BILLING CODE 3510–DR–F

COMMITTEE FOR PURCHASE FROM PEOPLE WHO ARE BLIND OR SEVERELY DISABLED

Procurement List; Proposed Additions

AGENCY: Committee for Purchase From People Who Are Blind or Severely Disabled.

ACTION: Proposed Additions to Procurement List.

SUMMARY: The Committee has received proposals to add to the Procurement List commodity, military resale commodities and services to be furnished by nonprofit agencies employing persons who are blind or have other severe disabilities.

DATES: Comments must be received on or Before: November 21, 1994.

ADDRESSES: Committee for Purchase From People Who Are Blind or Severely Disabled, Crystal Square 3, Suite 403, 1735 Jefferson Davis Highway, Arlington, Virginia 22202–3461.

FOR FURTHER INFORMATION CONTACT: Beverly Milkman, (703) 603–7740.

SUPPLEMENTARY INFORMATION: This notice is published pursuant to 41 U.S.C. 47(a)(2) and 41 CFR 51–2–3. Its purpose is to provide interested persons an opportunity to submit comments on the possible impact of the proposed actions.

If the Committee approves the proposed additions, all entities of the Federal Government (except as otherwise indicated) will be required to procure the commodity, military resale commodities and services listed below from nonprofit agencies employing persons who are blind or have other severe disabilities.

I certify that the following action will not have a significant impact on a substantial number of small entities. The major factors considered for this certification were:

1. The action will not result in any additional reporting, recordkeeping or other compliance requirements for small entities other than the small organizations that will furnish the commodity, military resale commodities and services to the Government.

2. The action does not appear to have a severe economic impact on current contractors for the commodity, military resale commodities and services.

3. The action will result in authorizing small entities to furnish the commodity, military resale commodities and services to the Government.

4. There are no known regulatory alternatives which would accomplish the objectives of the Javits-Wagner-O'Day Act (41 U.S.C. 46–48c) in connection with the commodity, military resale commodities and services proposed for addition to the Procurement List.

Comments on this certification are invited. Commenters should identify the statement(s) underlying the certification on which they are providing additional information.

The following commodity, military resale commodities and services have been proposed for addition to Procurement List for production by the nonprofit agencies listed:

Commodity

Tea Mix, Instant
8955–00–823–7016
NPA: Ed Lindsey Industries for the Blind, Inc., Nashville, Tennessee

Military Resale Commodities

Mop, Roller and Refill
M.R. 930
M.R. 940
NPA: The Lighthouse for the Blind, Inc., Seattle, Washington

Broom, Corn
M.R. 960
NPA: Mississippi Industries for the Blind, Jackson, Mississippi

Mop, Deck
M.R. 961
NPA: Mississippi Industries for the Blind, Jackson, Mississippi

Services

Janitorial/Custodial
U.S. Army Reserve Center
Bakersfield, California
NPA: The Bakersfield Association for Retarded Citizens, Inc., Bakersfield, California

Janitorial/Custodial
Federal Building and U.S. Post Office
10 E. Babcock Street
Bozeman, Montana
NPA: Reach, Inc., Bozeman, Montana

Beverly L. Milkman,

Executive Director.

[FR Doc. 94–26151 Filed 10–20–94; 8:45 am]

BILLING CODE 6820–33–P

Procurement List; Addition

AGENCY: Committee for Purchase From People Who Are Blind or Severely Disabled.

ACTION: Addition to the Procurement List.

SUMMARY: This action adds to the Procurement List a service to be furnished by nonprofit agencies employing persons who are blind or have other severe disabilities.

EFFECTIVE DATE: November 21, 1994.

ADDRESSES: Committee for Purchase From People Who Are Blind or Severely Disabled, Crystal Square 3, Suite 403, 1735 Jefferson Davis Highway, Arlington, Virginia 22202–3461.

FOR FURTHER INFORMATION CONTACT: Beverly Milkman (703) 603–7740.

SUPPLEMENTARY INFORMATION: On September 2, 1994, the Committee for Purchase From People Who Are Blind or Severely Disabled published notices (59 FR 45666) of proposed addition to the Procurement List. After consideration of the material presented to it concerning capability of qualified nonprofit agencies to provide the service, fair market price, and impact of the addition on the current or most recent contractors, the Committee has determined that the service listed below are suitable for procurement by the Federal Government under 41 U.S.C. 46–48c and 41 CFR 51–2.4.

I certify that the following action will not have a significant impact on a substantial number of small entities. The major factors considered for this certification were:

1. The action will not result in any additional reporting, recordkeeping or other compliance requirements for small entities other than the small organizations that will furnish the service to the Government.

2. The action does not appear to have a severe economic impact on current contractors for the service.

3. The action will result in authorizing small entities to furnish the service to the Government.

4. There are no known regulatory alternatives which would accomplish the objectives of the Javits-Wagner-O'Day Act (41 U.S.C. 46–48c) in connection with the service proposed for addition to the Procurement List.

Accordingly, the following service is hereby added to the Procurement List:

Janitorial/Custodial, Naval Air Warfare Center Training Systems Division, 12350 Research Parkway, Orlando, Florida.

This action does not affect current contracts awarded prior to the effective date of this addition or options exercised under those contracts.

Beverly L. Milkman,

Executive Director.

[FR Doc. 94–26253 Filed 10–20–94; 8:45 am]

BILLING CODE 6820–33–P

DEPARTMENT OF DEFENSE

Office of the Secretary

Department of Defense Wage Committee; Notice of Closed Meetings

Pursuant to the provisions of section 10 of Public Law 92–463, the Federal Advisory Committee Act, notice is hereby given that a closed meeting of the Department of Defense Wage Committee will be held on November 1, 1994; November 8, 1994; November 15, 1994; November 22, 1994; and November 29, 1994, at 10:00 a.m. in Room 800, Hoffman Building #1, Alexandria, Virginia.

Under the provisions of section 10(d) of Public Law 92–463, the Department of Defense has determined that the meetings meet the criteria to close the meeting to the public because the matters considered are related to internal rules and practices of the Department of Defense and the detailed wage data considered were obtained from officials of private establishments with a guarantee that the data will be held in confidence.

However, members of the public who may wish to do so are invited to submit material in writing to the chairman concerning matters believed to be deserving of the Committee's attention.

Additional information concerning the meetings may be obtained by writing to the Chairman, Department of Defense Wage Committee, 4000 Defense Pentagon, Washington, DC 20301–4000.

Dated: October 18, 1994.

L.M. Bynum,

Alternate OSD Federal Register, Liaison Officer, Department of Defense.

[FR Doc. 94–26166 Filed 10–20–94; 8:45 am]

BILLING CODE 5000–04–M

Public Information Collection Requirement Submitted to the Office of Management and Budget (OMB) for Review

ACTION: Notice.

The Department of Defense has submitted to OMB for clearance, the following proposal for collection of information under the provisions of the Paperwork Reduction Act (44 U.S.C. chapter 35).

Title: Commercial Airlift Review; AMC Form 207.

Type of Request: Existing collection in use without an OMB control number.

Number of Respondents: 40.

Responses Per Respondent: 1.

Annual Responses: 40.

Average Burden Per Response: 41 hours.

Annual Burden Hours: 1,640.

Needs and Uses: The information collected hereby, is used to determine if commercial air carriers can support the airlift needs of the Department of Defense (DoD). The responses are evaluated and utilized in the approval process. Failure to provide the requested information would render the commercial air carrier ineligible for contract award to provide air carrier service to DoD.

Affected Public: Businesses or other for-profit.

Frequency: On occasion.

Respondent's Obligation: Required to obtain or retain a benefit.

OMB Desk Officer: Mr. Edward C. Springer.

Written comments and recommendations on the proposed information collection should be sent to Mr. Springer at the Office of Management and Budget, Desk Officer for DoD, Room 10236, New Executive Office Building, Washington, DC 20503.

DOD Clearance Officer: Mr. William Pearce.

Written requests for copies of the information collection proposal should be sent to Mr. Pearce, WHS/DIOR, 1215 Jefferson Davis Highway, Suite 1204, Arlington, VA 22202–4302.

Dated: October 17, 1994.

L.M. Bynum,

Alternate OSD Federal Register Liaison Officer, Department of Defense.

[FR Doc. 94–26083 Filed 10–20–94; 8:45 am]

BILLING CODE 5000–04–M

Public Information Collection Requirement Submitted to the Office of Management and Budget (OMB) for Review

ACTION: Notice.

The Department of Defense has submitted to OMB for clearance, the following proposal for collection of information under the provisions of the Paperwork Reduction Act (44 U.S.C. chapter 35).

Title: USACE Customer Satisfaction Survey.

Type of Request: New collection.

Number of Respondents: 2,500.

Responses Per Respondent: 1.

Annual Responses: 2,500.

Average Burden Per Response: 15 minutes.

Annual Burden Hours (including recordkeeping): 2,745.

Needs and Uses: In order to comply with Executive Order 12862, the US Army Corps of Engineers (USACE) will survey its customers to determine their satisfaction with the Civil Works Programs. USACE will use the information to improve performance and make necessary program and policy changes.

Affected Public: State or local Governments, businesses or other for-profit, Federal agencies or employees, non-profit institutions, and small businesses or organizations.

Frequency: Annually.

Respondent's Obligation: Voluntary.

OMB Desk Officer: Mr. Matthew Mitchell.

Written comments and recommendations on the proposed information collection should be sent to Mr. Mitchell at the Office of Management and Budget, Desk Officer for DoD, Room 10202, New Executive Office Building, Washington, DC 20503.

DOD Clearance Officer: Mr. William P. Pearce.

Written requests for copies of the information collection proposal should be sent to Mr. Pearce, WHS/DIOR, 1215 Jefferson Davis Highway, Suite 1204, Arlington, VA 22202–4302.

Dated: October 17, 1994.

L. M. Bynum,

Alternate OSD Federal Register Liaison Officer, Department of Defense.

[FR Doc. 94–26087 Filed 10–20–94; 8:45 am]

BILLING CODE 5000–04–M

Public Information Collection Requirement Submitted to the Office of Management and Budget (OMB) for Review

ACTION: Notice.

The Department of Defense has submitted to OMB for clearance, the following proposal for collection of information under the provisions of the Paperwork Reduction Act (44 U.S.C. chapter 35).

Title: Survey of Separated Community College of the Air Force (CCAF) Alumni.

Type of Request: New collection.

Number of Respondents: 500.

Responses Per Respondent: 1.

Annual Responses: 500.

Average Burden Per Response: 20 minutes.

Annual Burden Hours: 167.

Needs and Uses: Separated Community College of the Air Force (CCAF) graduates will be surveyed to determine how well CCAF is meeting its mission, as well as to identify areas needing improvement. Surveying separated graduates will also provide data on the usefulness of the CCAF degree in the civilian sector.

Affected Public: Individuals or households.

Frequency: Annually.

Respondent's Obligation: Voluntary.

OMB Desk Officer: Mr. Edward C. Springer.

Written comments and recommendations on the proposed information collection should be sent to Mr. Springer at the Office of Management and Budget, Desk Officer for DoD, Room 10236, New Executive Office Building, Washington, DC 20503.

DOD Clearance Officer: Mr. William P. Pearce.

Written requests for copies of the information collection proposal should be sent to Mr. Pearce, WHS/DIOR, 1215 Jefferson Davis Highway, Suite 1204, Arlington, VA 22202–4302.

Dated: October 17, 1994.

L.M. Bynum,

Alternate OSD Federal Register Liaison Officer, Department of Defense.

[FR Doc. 94–26084 Filed 10–20–94; 8:45 am]

BILLING CODE 5000–04–M

DEPARTMENT OF EDUCATION

Notice of Proposed Information Collection Requests

AGENCY: Department of Education.

ACTION: Notice of proposed information collection requests.

SUMMARY: The Acting Director, Information Resources Management Service, invites comments on the proposed information collection requests as required by the Paperwork Reduction Act of 1980.

DATES: Interested persons are invited to submit comments on or before November 21, 1994.

ADDRESSES: Written comments should be addressed to the Office of Information and Regulatory Affairs, Attention: Dan Chenok: Desk Officer, Department of Education, Office of Management and Budget, 725 17th Street, NW., Room 3208, New Executive Office Building, Washington, DC 20503. Requests for copies of the proposed information collection requests should be addressed to Patrick J. Sherrill, Department of Education, 400 Maryland Avenue, SW., Room 5624, Regional Office Building 3, Washington, DC 20202–4651.

FOR FURTHER INFORMATION CONTACT: Patrick J. Sherrill (202) 708–9915. Individuals who use a telecommunications device for the deaf (TDD) may call the Federal Information Relay Service (FIRS) at 1–800–877–8339 between 8 a.m. and 8 p.m., Eastern time, Monday through Friday.

SUPPLEMENTARY INFORMATION: Section 3517 of the Paperwork Reduction Act of

1980 (44 U.S.C. Chapter 35) requires that the Office of Management and Budget (OMB) provide interested Federal agencies and the public an early opportunity to comment on information collection requests. OMB may amend or waive the requirement for public consultation to the extent that public participation in the approval process would defeat the purpose of the information collection, violate State or Federal law, or substantially interfere with any agency's ability to perform its statutory obligations. The Acting Director of the Information Resources Management Service, publishes this notice containing proposed information collection requests prior to submission of these requests to OMB. Each proposed information collection, grouped by office, contains the following: (1) Type of review requested, e.g., new, revision, extension, existing or reinstatement; (2) Title; (3) Frequency of collection; (4) The affected public; (5) Reporting burden; and/or (6) Recordkeeping burden; and (7) Abstract. OMB invites public comment at the address specified above. Copies of the requests are available from Patrick J. Sherrill at the address specified above.

Dated: October 17, 1994.

Ingrid Kolb,

Acting Director, Information Resources Management Service.

Office of Educational Research and Improvement

Type of Review: Revision.
Title: Common Core of Data (CCD) 1995–1997.
Frequency: Annually.
Affected Public: State or local governments.
Reporting Burden: Responses: 56. *Burden Hours:* 6,208.
Recordkeeping Burden: Recordkeepers: 0. *Burden Hours:* 0.
Abstract: These surveys provide information about student enrollment, graduates, teachers, and related finances and are used in the allocation of Federal funds under Chapter 1, Education Consolidation and Improvement Act, as amended. Data are also provided to the general public as requested.

Office of Educational Research and Improvement

Type of Review: New.
Title: Application for Assessment Development and Evaluation Grants Program.
Frequency: Annually.
Affected Public: State or local governments.
Reporting Burden: Responses: 75. *Burden Hours:* 2,250.
Recordkeeping Burden: Recordkeepers: 0. *Burden Hours:* 0.
Abstract: This form will be used by State Educational agencies to apply for funding under the Assessment Development and Evaluation Program. The Department will use the information to make grant awards.

Office of Special Education and Rehabilitative Services

Type of Review: Reinstatement.
Title: Case Service Report.
Frequency: Annually.
Affected Public: State or local governments.
Reporting Burden: Responses: 81. *Burden Hours:* 3,645.
Recordkeeping Burden: Recordkeepers: 0. *Burden Hours:* 0.
Abstract: State Vocational Rehabilitative agencies report client and program data. The Department uses the information to assess the accomplishments of program goals and objectives, and to prepare the annual report to Congress.

Office of the Under Secretary

Type of Review: New.
Title: Direct Loan Program Evaluation.
Frequency: Annually.
Affected Public: State or local governments; non-profit institutions; small businesses or organizations.
Reporting Burden: Responses: 2,104. *Burden Hours:* 1,052.
Recordkeeping Burden: Recordkeepers: 0. *Burden Hours:* 0.
Abstract: The purpose of this project is to evaluate the effectiveness of the Direct Loan Program and to compare its costs and services to those of the Federal Family Education Loan Program. The Department will use the information to make assessments of the Department's provision of systems, technical assistance and training, and the perceptions of institutions and borrowers.

[FR Doc. 94–26112 Filed 10–20–94; 8:45 am]
BILLING CODE 4000–01–P

DEPARTMENT OF ENERGY

Energy Information Administration

Agency Information Collection Under Review by the Office of Management and Budget

AGENCY: Energy Information Administration, Department of Energy.

ACTION: Notice of request submitted for review by the Office of Management and Budget.

SUMMARY: The Energy Information Administration (EIA) has submitted the energy information collection(s) listed at the end of this notice to the Office of Management and Budget (OMB) for review under provisions of the Paperwork Reduction Act (Pub. L. 96–511, 44 U.S.C. 3501 *et seq.*). The listing does not include collections of information contained in new or revised regulations which are to be submitted under section 3504(h) of the Paperwork Reduction Act, nor management and procurement assistance requirements collected by the Department of Energy (DOE).

Each entry contains the following information: (1) The sponsor of the collection (the DOE component or Federal Energy Regulatory Commission (FERC)); (2) Collection number(s); (3) Current OMB docket number (if applicable); (4) Collection title; (5) Type of request, e.g., new, revision, extension, or reinstatement; (6) Frequency of collection; (7) Response obligation, i.e., mandatory, voluntary, or required to obtain or retain benefit; (8) Affected public; (9) An estimate of the number of respondents per report period; (10) An estimate of the number of responses per respondent annually; (11) An estimate of the average hours per response; (12) The estimated total annual respondent burden; and (13) A brief abstract describing the proposed collection and the respondents.

DATES: Comments must be filed on or before November 21, 1994. If you anticipate that you will be submitting comments but find it difficult to do so within the time allowed by this notice, you should advise the OMB DOE Desk Officer listed below of your intention to do so as soon as possible. The Desk Officer may be telephoned at (202) 395–3084. (Also, please notify the EIA contact listed below.)

ADDRESSES: Address comments to the Department of Energy Desk Officer, Office of Information and Regulatory Affairs, Office of Management and Budget, 726 Jackson Place N.W., Washington, DC 20503. (Comments should also be addressed to the Office of Statistical Standards at the address below.)

FOR FURTHER INFORMATION CONTACT: Requests for additional information or copies of the forms and instructions should be directed to Norma White, Office of Statistical Standards, (EI–73), Forrestal Building, U.S. Department of Energy, Washington, D.C. 20585. Ms. White may be telephoned at (202) 254–5327.

SUPPLEMENTARY INFORMATION: The energy information collection submitted to OMB for review was:

1. Energy Information Administration.

2. EIA–254, EIA–851 and EIA–858.
3. 1905–0160.
4. Nuclear and Uranium Data Program Package.
5. Revision.
6. Monthly and Annually.
7. Mandatory.
8. State or local governments, Businesses or other for-profit, and Small businesses or organizations.
9. 169 respondents.
10. 2.07 responses.
11. 10.90 hours per response.
12. 3,805 hours.
13. Forms EIA–254, 851 and 858 collect data on the costs of nuclear power plants under construction, domestic uranium production, and certain aspects of uranium marketing, exploration and finance. Data are used in determining the viability of the domestic uranium industry. Respondents are firms in the uranium business and electric utilities.

Statutory Authority: Sec. 2(a) of the Paperwork Reduction Act of 1980 (Pub. L. No. 96–511), which amended Chapter 35 of Title 44 United States Code (See 44 U.S.C. 3506(a) and (c)(1).

Issued in Washington, D.C., October 17, 1994.

Yvonne M. Bishop,

Director, Office of Statistical Standards, Energy Information Administration.

[FR Doc. 94–26188 Filed 10–20–94; 8:45 am]

BILLING CODE 6450–01–P

Agency Information Collection Under Review by the Office of Management and Budget

AGENCY: Energy Information Administration, DOE.

ACTION: Notice of request submitted for review by the Office of Management and Budget.

SUMMARY: The Energy Information Administration (EIA) has submitted the energy information collection(s) listed at the end of this notice to the Office of Management and Budget (OMB) for review under provisions of the Paperwork Reduction Act (Pub. L. No. 96–511, 44 U.S.C. 3501 *et seq.*). The listing does not include collections of information contained in new or revised regulations which are to be submitted under section 3504(h) of the Paperwork Reduction Act, nor management and procurement assistance requirements collected by the Department of Energy (DOE).

Each entry contains the following information: (1) The sponsor of the collection (the DOE component or Federal Energy Regulatory Commission (FERC)); (2) Collection number(s); (3) Current OMB docket number (if applicable); (4) Collection title; (5) Type of request, e.g., new, revision, extension, or reinstatement; (6) Frequency of collection; (7) Response obligation, i.e., mandatory, voluntary, or required to obtain or retain benefit; (8) Affected public; (9) An estimate of the number of respondents per report period; (10) An estimate of the number of responses per respondent annually; (11) An estimate of the average hours per response; (12) The estimated total annual respondent burden; and (13) A brief abstract describing the proposed collection and the respondents.

DATES: Comments must be filed on or before November 21, 1994. If you anticipate that you will be submitting comments but find it difficult to do so within the time allowed by this notice, you should advise the OMB DOE Desk Officer listed below of your intention to do so as soon as possible. The Desk Officer may be telephoned at (202) 395–3084. (Also, please notify the EIA contact listed below.)

ADDRESSES: Address comments to the Department of Energy Desk Officer, Office of Information and Regulatory Affairs, Office of Management and Budget, 726 Jackson Place N.W., Washington, D.C. 20503. (Comments should also be addressed to the Office of Statistical Standards at the address below.)

FOR FURTHER INFORMATION CONTACT: Requests for additional information or copies of the forms and instructions should be directed to Norma White, Office of Statistical Standards, (EI–73), Forrestal Building, U.S. Department of Energy, Washington, D.C. 20585. Ms. White may be telephoned at (202) 254–5327.

SUPPLEMENTARY INFORMATION: The energy information collection submitted to OMB for review was:

1. Energy Information Administration.
2. EIA–23, 23P and 64A.
3. 1905–0057.
4. Oil and Gas Reserve System Surveys.
5. Extension.
6. Annually.
7. Mandatory.
8. Businesses or other for-profit.
9. 7,640 respondents.
10. 1 response.
11. 14.48 hours per response.
12. 110,629 hours.
13. The surveys collect data on reserves of crude oil, natural gas, and natural gas liquids; determine the status and approximate level of production; and provide data used to determine natural gas liquids production and reserves. Data are published. Respondents are domestic oil and gas well operators and natural gas processing plant operators.

Statutory Authority: Sec. 2(a) of the Paperwork Reduction Act of 1980, (Pub L. No. 96–511), which amended Chapter 35 of Title 44 United States Code (See 44 U.S.C. § 3506 (a) and (c)(1).

Issued in Washington, D.C., October 17, 1994.

Yvonne M. Bishop,

Director, Office of Statistical Standards, Energy Information Administration.

[FR Doc. 94–26187 Filed 10–20–94; 8:45 am]

BILLING CODE 6450–01–P

Federal Energy Regulatory Commission

[Docket No. CP94–29–000]

Paiute Pipeline Company; Intent To Prepare an Environmental Assessment for the Proposed Paiute Pipeline Expansion Project

October 18, 1994.

The staff of the Federal Energy Regulatory Commission (FERC or the Commission) will prepare an environmental assessment (EA) that will discuss environmental impacts of the construction and operation of facilities proposed in the Paiute Pipeline Expansion Project.[1] This EA will be used by the Commission in its decision-making process to determine whether an environmental impact statement is necessary and whether or not to approve the project.

Summary of the Proposed Project

On November 10, 1993, the Federal Energy Regulatory Commission (FERC or Commission) issued a Notice of Intent To Prepare a Draft Environmental Impact Statement (EIS) for the Northwest Expansion II Projects. The projects included two proposals by Paiute in Docket Nos. CP93–751–000 and CP94–29–000, and related projects proposed by Northwest Pipeline Corporation (Northwest) in Docket Nos. CP93–613–000 and CP93–673–000. The purpose of the notice was to request comments on environmental issues.

Because of changes made in Northwest's proposals, Paiute withdrew its application in Docket No. CP93–751–000 which proposed the construction of 7.8 miles of loop pipeline in two segments on September 8, 1994. Also, on September 9, 1994, Paiute sent a letter to the Director of OPR indicating

[1] Paiute Pipeline Company's application was filed with the Commission under section 7 of the Natural Gas Act and Part 157 of the Commission's regulations.

that no changes were necessary to Docket No. CP94–29–000. In this application Paiute proposes to:

• Construct 53.5 miles of loop pipeline in seven segments;

• Construct two new compressor stations with a total of 2,139 horsepower (hp) of compression;

• Add 268 hp of compression at an existing compressor station by installing an upgraded compressor unit; and

• Modify other existing meter, compressor, and pressure reduction stations.

The following table contains more detailed information about the facilities. The general location of the project facilities is shown in appendix 1.[2]

PAIUTE PIPELINE EXPANSION PROJECT FACILITIES

State/proposed facility	Pipe diameter (in)	Approximate length (mi)	Added horsepower	County
Nevada:				
Mainline:				
Paradise North Loop	24	7.2		Elko/Humboldt.
Paradise South Loop	24	10.4		Humboldt.
Winnemucca South Loop	24	10.4		Humboldt.
Rye Patch South Loop	24	5.0		Pershing.
Paradise Compressor Station[a]			268	
North Tahoe Lateral:				
North Tahoe Loop	16	14.0		Carson City/ Washoe.
Incline Village Loop	12	2.7		Washoe.
South Tahoe Lateral:				
South Tahoe Loop	12	3.8		Douglas.
Elko Lateral:				
Battle Mountain Compressor Station			1,339	Lander.
Palisade Compressor Station			800	Eureka.
Total		53.5	2,407	

[a] Paiute proposes to upgrade compressor unit at this existing compressor station.

Southwest Gas Corporation, a local distribution company, would also build facilities to receive gas from Paiute and serve additional customers in the Truckee, California area. Those facilities include:

• 22.9 miles of small diameter distribution pipeline;

• 18.4 miles of transmission pipeline (ranging from 6 to 12 inches in diameter); and

• Five distribution regulator stations.

We have determined that an environmental assessment (EA), rather than an EIS is the more appropriate document for analyzing the potential environmental impacts associated with Paiute's project.[3] This decision was made because the scope of the projects originally anticipated for the EIS decreased when Northwest's applications no longer included the delivery of gas to Paiute, severing the connection between the two proposals, and Paiute withdrew one of its proposals. The Bureau of Land Management and U.S. Forest Service concur as cooperating agencies.

The EA Process

The National Environmental Policy Act (NEPA) requires the Commission to take into account the environmental impacts that could result from a major Federal action whenever it considers the issuance of a Certificate of Public Convenience and Necessity. Our EA will give the Commission the information it needs to do that. If the EA concludes that the projects would result in significant environmental impacts, we will prepare an environmental impact statement. Otherwise we will prepare a Finding of No Significant Impact.

NEPA also requires us to discover and address concerns the public may have about proposals. We call this "scoping". The main goal of the scoping process is to focus the analysis in the EA on the important environmental issues, and to separate these from issues that are insignificant and do not require detailed study. Local scoping meetings have already been held for the original projects. Additional scoping meetings are not planned since the facilities have not changed. We are asking for comments which may provide *new information* or on the change in the environmental documentation.

The EA will discuss impacts that *could* occur as a result of the construction and operation of the proposed projects under these general subject headings:

• Geology and soils
• Endangered and threatened species
• Water resources
• Vegetation
• Land use
• Air quality and noise
• Wetland and riparian habitat
• Cultural resources
• Fish and wildlife
• Public safety

We will also evaluate possible alternatives to the projects, or portions of the projects, and make recommendations on how to lessen or avoid impacts on the various resource areas.

Our independent analysis of the issues will result in the publication of the EA which will be mailed to Federal, state, and local agencies, public interest groups, interested individuals, affected landowners, newspapers, libraries, and the Commission's official service list for these proceedings.

[2] The appendices referenced in this notice are not being printed in the **Federal Register**. Copies are available from the Commission's Public Reference Branch, Room 3104, 941 North Capitol Street, N.E., Washington, D.C. 20426, or call (202) 208–371. Copies of the appendices were sent to all those receiving this notice in the mail.

[3] Pronouns "we," "us," and "our" refer to the staff of the Office of Pipeline Regulation at the FERC.

Public Participation

You can make a difference by sending a letter with your specific comments or concerns about the projects. You should focus on identifying information that was not previously available or brought to our attention. You do not need to re-submit comments if you have already done so. We are particularly interested in alternatives to the proposals (including alternative routes), and measures to avoid or lessen environmental impact. The more specific your comments, the more useful they will be. Please follow the instructions below to ensure that your comments are received and properly recorded:

- Address your letter to: Lois Cashell, Secretary, Federal Energy Regulatory Commission, 825 North Capitol St., NE., Washington, D.C. 20426;
- Reference Docket No. CP94–9–000;
- Send a *copy* of your letter to: Ms. Lauren O'Donnell, Project Manager, Federal Energy Regulatory Commission, 825 North Capitol St., N.E., Room 7312, Washington, D.C. 20426; and
- Mail your comments so they will be received in Washington D.C. on or before November 7, 1994.

Becoming an Intervenor

In addition to involvement in the EA scoping process, you may want to become an official party to the proceedings or an "intervenor". Among other things, intervenors have the right to receive copies of case-related Commission documents and filings by other intervenors. Likewise, each intervenor must provide copies of its filings to all other parties. If you want to become an intervenor you must file a Motion to Intervene according to Rule 214 of the Commission's Rules of Practice and Procedure (18 CFR 385.214) which is attached as appendix 2.

The date for filing timely motions to intervene in this proceeding has passed. Therefore, parties now seeking to file late interventions must show good cause, as required by Section 385.214(b)(3), why this time limitation should be waived. Environmental issues have been viewed as good cause for late intervention. You do not need intervenor status to have your scoping comments considered.

Environmental Mailing List

If you do not want to send comments at this time but still want to receive a copy of the EA, please return the Information Request (see appendix 3). If you have previously returned the Information Request you don't need to do so again.

Additional information about the proposed projects is available from Ms. Lauren O'Donnell, EA Project Manager, at (202) 208–325.

Lois D. Cashell

Secretary

[FR Doc. 94–26149 Filed 10–20–94; 8:45 am]

BILLING CODE 6717–01–P

[Docket Nos. ST94–6472–000 et al.]

Natural Gas Pipeline Company of America; Notice of Self-Implementing Transactions

October 17, 1994.

Take notice that the following transactions have been reported to the Commission as being implemented pursuant to part 284 of the Commission's regulations, sections 311 and 312 of the Natural Gas Policy Act of 1978 (NGPA) and Section 7 of the NGA and Section 5 of the Outer Continental Shelf Lands Act.[1]

The "Recipient" column in the following table indicates the entity receiving or purchasing the natural gas in each transaction.

The "Part 284 Subpart" column in the following table indicates the type of transaction.

A "B" indicates transportation by an interstate pipeline on behalf of an intrastate pipeline or a local distribution company pursuant to § 284.102 of the Commission's regulations and section 311(a)(1) of the NGPA.

A "C" indicates transportation by an intrastate pipeline on behalf of an interstate pipeline or a local distribution company served by an interstate pipeline pursuant to § 284.122 of the Commission's regulations and section 311(a)(2) of the NGPA.

A "D" indicates a sale by an intrastate pipeline to an interstate pipeline or a local distribution company served by an interstate pipeline pursuant to § 284.142 of the Commission's Regulations and section 311(b) of the NGPA. Any interested person may file a complaint concerning such sales pursuant to § 284.147(d) of the Commission's Regulations.

An "E" indicates an assignment by an intrastate pipeline to any interstate pipeline or local distribution company pursuant to § 284.163 of the Commission's regulations and section 312 of the NGPA.

A "G" indicates transportation by an interstate pipeline on behalf of another interstate pipeline pursuant to § 284.222 and a blanket certificate issued under § 284.221 of the Commission's regulations.

A "G–I" indicates transportation by an intrastate pipeline company pursuant to a blanket certificate issued under § 284.227 of the Commission's regulations.

A "G–S" indicates transportation by interstate pipelines on behalf of shippers other than interstate pipelines pursuant to § 284.223 and a blanket certificate issued under § 284.221 of the Commission's regulations.

A "G–LT" or "G-LS" indicates transportation, sales or assignments by a local distribution company on behalf of or to an interstate pipeline or local distribution company pursuant to a blanket certificate issued under § 284.224 of the Commission's regulations.

A "G–HT" or "G–HS" indicates transportation, sales or assignments by a Hinshaw Pipeline pursuant to a blanket certificate issued under § 284.224 of the Commission's regulations.

A "K" indicates transportation of natural gas on the Outer Continental Shelf by an interstate pipeline on behalf of another interstate pipeline pursuant to § 284.303 of the Commission's regulations.

A "K–S" indicates transportation of natural gas on the Outer Continental Shelf by an intrastate pipeline on behalf of shippers other than interstate pipelines pursuant to § 284.303 of the Commission's regulations.

Lois D. Cashell,

Secretary.

---

[1] Notice of a transaction does not constitute a determination that the terms and conditions of the proposed service will be approved or that the noticed filing is in compliance with the Commission's regulations.

Docket No.[1]	Transporter/seller	Recipient	Date filed	Part 284 subpart	Est. max. daily quantity[2]	Aff. Y/A/N[3]	Rate sch.	Date commenced	Projected termination date
ST94-6472	Natural Gas P/L Co. of America.	PSI, Inc	09-01-94	G-S	5,000	N	I	10-01-90	Indef.
ST94-6473	Williston Basin Inter. P/L Co.	Conoco, Inc	09-01-94	G-S	30,000	A	I	08-03-94	08-01-96
ST94-6474	Transamerican Natural Gas Corp.	Natural Gas P/L Co. of America.	09-02-94	C	20,000	N	I	03-01-91	Indef.
ST94-6475	Transamerican Natural Gas Corp.	Florida Gas Transmission Co.	09-02-94	C	20,000	N	I	12-17-93	Indef.
ST94-6476	Transamerican Natural Gas Corp.	Natural Gas P/L Co. of America.	09-02-94	C	20,000	N	I	10-09-93	Indef.
ST94-6477	Transamerican Natural Gas Corp.	Natural Gas P/L Co. of America.	09-02-94	C	20,000	N	I	10-07-93	Indef.
ST94-6478	Transamerican Natural Gas Corp.	Texas Eastern Transmission Co.	09-02-94	C	20,000	N	I	12-02-93	Indef.
ST94-6479	Transamerican Natural Gas Corp.	Tennessee Gas Pipeline Co.	09-02-94	C	20,000	N	I	12-16-93	Indef.
ST94-6480	Transamerican Natural Gas Corp.	Koch Gateway Pipe Line Co.	09-02-94	C	20,000	N	I	12-30-93	Indef.
ST94-6481	Transamerican Natural Gas Corp.	Koch Gateway Pipe Line Co.	09-02-94	C	20,000	N	I	09-30-93	Indef.
ST94-6482	Transamerican Natural Gas Corp.	Texas Eastern Trans. Co., et al.	09-02-94	C	20,000	N	I	08-01-93	Indef.
ST94-6483	Transamerican Natural Gas Corp.	North Shore Gas Co	09-02-94	C	20,000	N	I	03-01-87	Indef.
ST94-6484	Transamerican Natural Gas Corp.	Natural Gas P/L Co. of America.	09-02-94	C	20,000	N	I	06-01-87	Indef.
ST94-6485	Transamerican Natural Gas Corp.	Trunkline Gas Co	09-02-94	C	20,000	N	I	09-04-93	Indef.
ST94-6486	Transamerican Natural Gas Corp.	Texas Eastern Transmission Co.	09-02-94	C	20,000	N	I	08-01-93	Indef.
ST94-6487	Transamerican Natural Gas Corp.	Texas Eastern Transmission Co.	09-02-94	C	20,000	N	I	09-09-93	Indef.
ST94-6488	Transamerican Natural Gas Corp.	Texas Eastern Transmission Co.	09-02-94	C	20,000	N	I	08-01-93	Indef.
ST94-6489	Transamerican Natural Gas Corp.	Natural Gas P/L Co. of America.	09-02-94	C	20,000	N	I	09-01-93	Indef.
ST94-6490	Transamerican Natural Gas Corp.	Texas Eastern Transmission Co.	09-02-94	C	20,000	N	I	12-02-93	Indef.
ST94-6491	Transamerican Natural Gas Corp.	Tennessee Gas Pipeline Co.	09-02-94	C	20,000	N	I	12-08-93	Indef.
ST94-6492	Transamerican Natural Gas Corp.	Texas Eastern Transmission Co.	09-02-94	C	20,000	N	I	08-01-93	Indef.
ST94-6493	Transamerican Natural Gas Corp.	Tennessee Gas Pipeline Co.	09-02-94	C	20,000	N	I	10-20-93	Indef.
ST94-6494	Transamerican Natural Gas Corp.	Texas Eastern Transmission Co.	09-02-94	C	20,000	N	I	08-20-93	Indef.
ST94-6495	Transamerican Natural Gas Corp.	Tennessee Gas Pipeline Co.	09-02-94	C	20,000	N	I	09-01-93	Indef.
ST94-6496	Cheyenne Light, Fuel and Power.	Colorado Interstate Gas Co.	09-01-94	G-LT	5,000	N	I	07-20-94	06-23-04
ST94-6497	Northern Illinois Gas Co	Natural G/P/L Co. of Amer., et al.	09-02-94	G-HT	5,000	N	I	08-01-94	08-31-94
ST94-6498	Northern Illinois Gas Co	Natural G/P/L Co. of Amer., et al.	09-02-94	G-HT	10,000	N	I	09-01-94	09-30-94
ST94-6499	Midwestern Gas Transmission Co.	Coastal Gas Marketing Co.	09-06-94	G-S	20,000	N	F	08-27-94	Indef.
ST94-6500	Transamerican Natural Gas Corp.	Transcontinental Gas Pipe Line Corp.	09-06-94	C	20,000	N	I	01-12-93	Indef.
ST94-6501	Transamerican Natural Gas Corp.	Natural G/P/L Co. of Amer., et al.	09-06-94	C	20,000	N	I	02-01-93	Indef.
ST94-6502	Transamerican Natural Gas Corp.	Tennessee Gas Pipeline Co.	09-06-94	C	20,000	N	I	03-24-93	Indef.
ST94-6503	Transamerican Natural Gas Corp.	Transcontinental Gas Pipe Line Corp.	09-06-94	C	20,000	N	I	05-16-93	Indef.
ST94-6504	Transamerican Natural Gas Corp.	Texas Eastern Transmission Co.	09-06-94	C	20,000	N	I	05-05-93	Indef.
ST94-6505	Transamerican Natural Gas Corp.	Texas Eastern Transmission Co.	09-06-94	C	20,000	N	I	02-10-93	Indef.
ST94-6506	Transamerican Natural Gas Corp.	Texas Eastern Transmission Co.	09-06-94	C	20,000	N	I	02-25-93	Indef.

Docket No.[1]	Transporter/seller	Recipient	Date filed	Part 284 subpart	Est. max. daily quantity[2]	Aff. Y/A/N[3]	Rate sch.	Date commenced	Projected termination date
ST94-6507	Transamerican Natural Gas Corp.	Trunkline Gas Co	09-06-94	C	20,000	N	I	07-06-93	Indef.
ST94-6508	Transamerican Natural Gas Corp.	Natural Gas P/L Co. of America.	09-06-94	C	20,000	N	I	07-03-93	Indef.
ST94-6509	Transamerican Natural Gas Corp.	Tennessee Gas Pipeline Co.	09-06-94	C	20,000	N	I	09-10-93	Indef.
ST94-6510	Transamerican Natural Gas Corp.	Texas Eastern Transmission Co.	09-06-94	C	20,000	N	I	09-12-93	Indef.
ST94-6511	Transtexas Gas Corp	Koch Gateway Pipe Line Co.	09-06-94	C	20,000	N	I	04-05-94	Indef.
ST94-6512	Transtexas Gas Corp	Tennessee Gas Pipeline Co.	09-06-94	C	20,000	N	I	01-13-94	Indef.
ST94-6513	Transtexas Gas Corp	Tennessee Gas Pipeline Co.	09-06-94	C	20,000	N	I	02-01-94	Indef.
ST94-6514	Transtexas Gas Corp	Texas Eastern Transmission Co.	09-06-94	C	20,000	N	I	01-28-94	Indef.
ST94-6515	Transtexas Gas Corp	Natural Gas P/L Co. of America.	09-06-94	C	20,000	N	I	05-01-94	Indef.
ST94-6516	Transtexas Gas Corp	Tennessee Gas Pipeline Co.	09-06-94	C	20,000	N	I	04-14-94	Indef.
ST94-6517	Transtexas Gas Corp	Tennessee Gas Pipeline Co.	09-06-94	C	20,000	N	I	02-11-94	Indef.
ST94-6518	Transtexas Gas Corp	Tennessee Gas Pipeline Co.	09-06-94	C	20,000	N	I	04-02-94	Indef.
ST94-6519	Transtexas Gas Corp	Natural Gas P/L Co. of America.	09-06-94	C	20,000	N	I	03-03-94	Indef.
ST94-6520	Transtexas Gas Corp	Texas Eastern Transmission Co.	09-06-94	C	20,000	N	I	05-19-94	Indef.
ST94-6521	Transtexas Gas Corp	Texas Eastern Transmission Co.	09-06-94	C	20,000	N	I	05-02-94	Indef.
ST94-6522	Transtexas Gas Corp	Trunkline Gas Co	09-06-94	C	20,000	N	I	03-22-94	Indef.
ST94-6523	Transtexas Gas Corp	Texas Eastern Transmission Co.	09-06-94	C	20,000	N	I	03-01-94	Indef.
ST94-6524	Transtexas Gas Corp	Tennessee Gas Pipeline Co.	09-06-94	C	20,000	N	I	05-17-94	Indef.
ST94-6525	Transtexas Gas Corp	Tennessee Gas Pipeline Co.	09-06-94	C	20,000	N	I	03-12-94	Indef.
ST94-6526	Transtexas Gas Corp	Koch Gateway Pipe Line Co.	09-06-94	C	50,000	N	I	03-05-94	Indef.
ST94-6527	Transok Gas Transmission Co.	ANR Pipeline Co., et al .	09-02-94	C	5,000	N	I	04-01-94	Indef.
ST94-6528	Transok Gas Transmission Co.	ANR Pipeline Co., et al .	09-02-94	C	60,000	N	I	06-01-94	Indef.
ST94-6529	Transok Gas Transmission Co.	ANR Pipeline Co., et al .	09-02-94	C	60,000	N	I	06-01-94	Indef.
ST94-6530	Consumers Power Co ...	Michigan Gas Storage Co., et al.	09-06-94	G-HT	50,000	N	I	08-08-94	Indef.
ST94-6531	Gas Co. of New Mexico	U.S. Gas Transportation, Inc.	09-06-94	G-HT	30,000	N	I	07-08-94	Indef.
ST94-6532	Michigan Gas Storage Co.	Consumers Power Co ...	09-06-94	B	50,000	Y	I	08-08-94	Indef.
ST94-6533	Panhandle Eastern Pipe Line Co.	Cargill, Inc	09-06-94	G-S	100,000	N	I	08-04-94	04-30-99
ST94-6534	Algonquin Gas Transmission Co.	New England Power Co	09-06-94	B	101,400	N	F	07-23-94	Indef.
ST94-6535	Sabine Pipe Line Co	Centana Energy Marketing Co.	09-06-94	G-S	100,000	N	I	08-01-94	Indef.
ST94-6536	Natural Gas P/L Co. of America.	Mobil Natural Gas Inc	09-06-94	G-S	26,000	N	F	08-05-94	08-12-94
ST94-6537	Natural Gas P/L Co. of America.	Mobil Natural Gas Inc	09-06-94	G-S	17,000	N	F	08-04-94	08-12-94
ST94-6538	Texas Gas Transmission Corp.	GGR Energy	09-06-94	G-S	60,000	Y	I	08-17-94	Indef.
ST94-6539	Williston Basin Inter. P/L Co.	Conoco, Inc	09-07-94	G-S	257,719	A	I	08-08-94	09-30-94
ST94-6540	Natural Gas P/L Co. of America.	Fina Natural Gas Co	09-07-94	G-S	10,000	N	F	09-01-94	09-30-94
ST94-6541	Natural Gas P/L Co. of America.	Hadson Gas Systems, Inc.	09-07-94	G-S	50,000	N	I	10-01-90	Indef.
ST94-6542	Columbia Gas Transmission Corp.	GGR Energy	09-08-94	G-S	30,000	N	I	08-15-94	Indef.

Docket No.[1]	Transporter/seller	Recipient	Date filed	Part 284 subpart	Est. max. daily quantity[2]	Aff. Y/A/N[3]	Rate sch.	Date commenced	Projected termination date
ST94-6543	Columbia Gas Transmission Corp.	GGR Energy	09-08-94	G-S	30,000	N	I	08-15-94	Indef.
ST94-6544	Chandeleur Pipe Line Co.	Hadson Gas Systems, Inc.	09-08-94	K-S	10,000	N	F	08-01-94	Indef.
ST94-6545	Chandeleur Pipe Line Co.	Chevron U.S.A., Inc.	09-08-94	K-S	65,000	Y	F	08-01-94	Indef.
ST94-6546	Northern Natural Gas Co	Iowa-Illinois Gas and Electric Co.	09-08-94	G-S	100,000	N	I	09-01-94	Indef.
ST94-6547	Northern Natural Gas Co	Oasis Pipe Line Co	09-08-94	B	100,000	N	I	08-17-94	Indef.
ST94-6548	Northern Natural Gas Co	Nebraska Public Gas Agency.	09-08-94	G-S	30,000	N	I	09-01-94	Indef.
ST94-6549	Northern Natural Gas Co	Poco Petroleums Ltd	09-08-94	G-S	100,000	N	I	06-08-94	Indef.
ST94-6550	Natural Gas P/L Co. of America.	AIG Trading Corp	09-09-94	G-S	200,000	N	I	09-01-94	Indef.
ST94-6551	Panhandle Eastern Pipe Line Co.	Delhi Gas Marketing Corp.	09-12-94	G-S	50,000	N	I	08-12-94	07-31-96
ST94-6553	Trunkline Gas Co	Southern Natural Gas Co.	09-09-94	G	10,000	N	I	09-01-94	Indef.
ST94-6554	Trunkline Gas Co	Interenergy Gas Services Corp.	09-09-94	G-S	10,000	N	I	09-02-94	Indef.
ST94-6555	Ozark Gas Transmission System.	Oklahoma Natural Gas Co.	09-12-94	B	100,000	N	I	02-03-94	Indef.
ST94-6556	Ozark Gas Transmission System.	Oklahoma Natural Gas Co.	09-12-94	B	150,000	N	I	02-09-94	Indef.
ST94-6557	Ozark Gas Transmission System.	Enron Gas Marketing, Inc.	09-12-94	G-S	100,000	N	I	02-01-94	Indef.
ST94-6558	Williams Natural Gas Co	Wickford Energy Marketing.	09-12-94	G-S	25,000	N	I	08-31-94	06-01-95
ST94-6559	Williams Natural Gas Co	HS Resources, Inc	09-12-94	G-S	5,000	N	I	09-01-94	Indef.
ST94-6560	Williams Natural Gas Co	Texaco Gas Marketing, Inc.	09-12-94	G-S	50,000	N	I	09-01-94	01-01-95
ST94-6561	Lone Star Gas Co	Trunkline Gas Co	09-13-94	C	6,500	N	I	08-26-94	Indef.
ST94-6562	Williams Natural Gas Co	Union Pacific Fuels, Inc .	09-13-94	G-S	25,000	N	I	08-31-94	07-01-95
ST94-6563	Florida Gas Transmission Co.	Coastal Gas Marketing ..	09-13-94	G-S	75,000	N	I	09-01-94	Indef.
ST94-6564	Florida Gas Transmission Co.	Tiger Bay Limited Partnership.	09-13-94	G-S	10,603	N	F	09-03-94	Indef.
ST94-6565	Florida Gas Transmission Co.	Enron Gas marketing, Inc.	09-13-94	G-S	600,000	A	I	09-01-94	Indef.
ST94-6566	Columbia Gas Transmission Corp.	Perry Gas Co., Inc	09-13-94	G-S	20,000	N	I	09-01-94	Indef.
ST94-6567	Columbia Gas Transmission Corp.	Perry Gas Co., Inc.	09-13-94	G-S	N/A	N	I	09-01-94	Indef.
ST94-6568	Columbia Gas Transmission Corp.	Stand Energy Corp	09-13-94	G-S	30	N	F	09-01-94	Indef.
ST94-6569	Columbia Gas Transmission Corp.	Gaslantic Corp	09-13-94	G-S	392	N	F	09-02-94	04-30-95
ST94-6570	Columbia Gas Transmission Corp.	U.S. Energy Development Corp.	09-13-94	G-S	N/A	N	I	09-01-94	Indef.
ST94-6571	Columbia Gas Transmission Corp.	Panda Brandywine Corp	09-13-94	G-S	24,000	N	I	09-01-94	Indef.
ST94-6572	Northern Natural Gas Co	Apache Corp	09-14-94	G-S	10,000	N	F	09-01-94	Indef.
ST94-6573	Northern Natural Gas Co	Great Plains Natural Gas Co.	09-14-94	B/G-S	5,500	N	F	09-01-94	03-31-95
ST94-6574	Northern Natural Gas Co	Enron Oil & Gas Co	09-14-94	G-S	60,000	Y	F	09-01-94	06-30-97
ST94-6575	Natural Gas P/L Co. of America.	Howard Energy Co., Inc	09-14-94	G-S	100,000	N	I	08-31-94	Indef.
ST94-6577	Delhi Gas Pipeline Corp	ANR Pipeline Co., et al .	09-15-94	C	10,000	N	I	09-01-94	Indef.
ST94-6578	Ong Transmission Co. ...	Natural Gas P/L Co. of America.	09-16-94	C	50,000	N	I	09-08-94	Indef.
ST94-6579	Valero Transmission, L.P	Trunkline Gas Co	09-16-94	C	5,000	N	I	09-02-94	Indef.
ST94-6580	Valero Transmission, L.P	Tennessee Gas Pipeline Co., et al.	09-16-94	C	50,000	N	I	08-19-94	Indef.
ST94-6581	Tennessee Gas Pipeline Co.	Flores & Rucks, Inc	09-16-94	G-S	560	N	I	09-01-94	Indef.
ST94-6582	Midwestern Gas Transmission Co.	Tenneco Gas Marketing Co.	09-16-94	G-S	21,000	A	F	09-01-94	Indef.
ST94-6583	Midwestern Gas Transmission Co.	Southern Indiana Gas & Electric Co.	09-16-94	G-S	6,474	N	F	09-01-94	Indef.
ST94-6584	Midwestern Gas Transmission Co.	Mobil Natural Gas, Inc ...	09-16-94	G-S	8,300	N	F	09-02-94	Indef.

Docket No.[1]	Transporter/seller	Recipient	Date filed	Part 284 subpart	Est. max. daily quantity[2]	Aff. Y/A/N[3]	Rate sch.	Date commenced	Projected termination date
ST94-6585	Noram Gas Transmission Co.	Ward Gas Marketing	09-16-94	G-S	300,000	N	I	08-20-94	Indef.
ST94-6586	Noram Gas Transmission Co.	Nucor-Yamoto Steel L.P	09-16-94	G-S	9,000	N	F	07-01-94	Indef.
ST94-6587	Noram Gas Transmission Co.	Interenergy Gas Services Corp.	09-16-94	G-S	25,000	N	I	09-01-94	Indef.
ST94-6588	Noram Gas Transmission Co.	Job Construction Co	09-16-94	G-S	300	N	F	09-01-94	Indef.
ST94-6589	Panhandle Eastern Pipe Line Co.	Anadarko Trading Co	09-16-94	G-S	221,000	N	F	09-01-94	11-30-95
ST94-6590	Panhandle Eastern Pipe Line Co.	Arcadian Partners, L.P ..	09-16-94	G-S	7,000	N	F	09-01-94	03-31-95
ST94-6591	El Paso Natural Gas Co	Southern California Edison Co.	09-16-94	G-S	200,000	N	I	08-17-94	Indef.
ST94-6592	Noram Gas Transmission Co.	Coastal Gas Marketing Co.	09-16-94	G-S	2,400	N	F	09-01-94	Indef.
ST94-6593	Florida Gas Transmission Co.	Exxon Corp	09-16-94	G-S	50,000	N	I	09-01-94	Indef.
ST94-6594	Noram Gas Transmission Co.	Cox Resources Ltd	09-15-94	G-S	10,000	N	I	08-01-94	Indef.
ST94-6595	Noram Gas Transmission Co.	Jefferson Regional Medical Center.	09-15-94	G-S	510	N	F	09-01-94	Indef.
ST94-6596	Noram Gas Transmission Co.	Timex Corp	09-15-94	G-S	500	N	F	08-31-94	Indef.
ST94-6597	Noram Gas Transmission Co.	Tokusen U.S.A., Inc	09-15-94	G-S	250	N	F	08-31-94	Indef.
ST94-6598	Noram Gas Transmission Co.	Pace Industries, Inc	09-15-94	G-S	425	N	F	08-31-94	Indef.
ST94-6599	Noram Gas Transmission Co.	Clinton Gas Transmission, Inc.	09-15-94	G-S	1,500	N	F	09-01-94	08-31-94
ST94-6600	Noram Gas Transmission Co..	Bibler Brothers #2	09-15-94	G-S	250	N	F	08-31-94	Indef.
ST94-6601	Noram Gas Transmission Co.	Associated Gas Services, Inc.	09-15-94	G-S	2,000	N	F	08-02-94	Indef.
ST94-6602	Noram Gas Transmission Co.	Libby Glass, Inc	09-15-94	G-S	4,000	N	F	08-01-94	08-31-94
ST94-6603 ..	Noram Gas Transmission Co.	Endevco Oil and Gas Co	09-15-94	G-S	20,000	N	I	08-13-94	Indef.
ST94-6604	Noram Gas Transmission Co.	Energy Development Corp.	09-15-94	G-S	30,000	N	I	06-01-94	Indef.
ST94-6605	Koch Gateway Pipeline Co.	Noram Hub Services	09-15-94	G-S	N/A	N	I	08-20-94	Indef.
ST94-6606	Koch Gateway Pipeline Co.	City of Breaux Bridge Gas System.	09-15-94	G-S	2,200	N	F	08-20-94	08-20-97
ST94-6607	Koch Gateway Pipeline Co.	Noram Energy Services, Inc.	09-15-94	G-S	N/A	N	I	08-20-94	Indef.
ST94-6608	Great Lakes Gas Trans. L.P.	AIG Trading Corp	09-15-94	G-S	75,000	N	F	08-23-94	07-31-95
ST94-6609	Alabama-Tennessee Natural Gas Co.	City of Moulton	09-15-94	B	1,272	N	I	09-01-94	09-01-96
ST94-6610	Black Marlin Pipeline Co	Union Carbide Corp	09-15-94	G-S	14,000	N	F	09-01-94	Indef.
ST94-6611	Natural Gas P/L Co. of America.	Texaco Gas Marketing Inc.	09-15-94	G-S	10,000	N	F	09-01-94	08-31-95
ST94-6612	Great Lakes Gas Trans. L.P.	Union Gas Limited	09-15-94	G-S	25,000	N	F	08-27-94	09-30-94
ST94-6613	Bridgeline Gas Distribution LLC.	Sabine Pipe Line Co., et al.	09-19-94	G-HT	8,500	N	I	08-25-94	Indef.
ST94-6614	U-T Offshore System	Vastar Gas Marketing, Inc.	09-19-94	K-S	21,000	N	F	09-02-94	09-30-94
ST94-6615	U-T Offshore System	Texaco Gas Marketing, Inc.	09-19-94	K-S	15,000	N	F	09-01-94	09-30-94
ST94-6616	U-T Offshore System	Mobil Natural Gas Inc	09-19-94	K-S	10,000	N	F	09-01-94	09-30-94
ST94-6617	U-T Offshore System	Coast Energy Group	09-19-94	K-S	60,000	N	F	09-01-94	09-30-94
ST94-6618	U-T Offshore System	CNG Producing Co	09-19-94	K-S	42,500	N	F	09-01-94	09-30-94
ST94-6619	High Island Offshore System.	National Gas Resources, L.P.	09-19-94	K-S	50,241	N	I	09-01-94	Indef.
ST94-6621	Koch Gateway Pipeline Co.	Southern Natural Gas Co.	09-20-94	G	40,000	N	F	09-01-94	Indef.
ST94-6622	Koch Gateway Pipeline Co.	Southern Natural Gas Co.	09-20-94	G	3,000	N	F	09-01-94	Indef.

Docket No.[1]	Transporter/seller	Recipient	Date filed	Part 284 subpart	Est. max. daily quantity[2]	Aff. Y/A/N[3]	Rate sch.	Date commenced	Projected termination date
ST94-6623	Koch Gateway Pipeline Co.	Trans Louisiana Industrial Gas Co.	09-20-94	G-S	N/A	N	I	09-01-94	Indef.
ST94-6624	Northern Border Pipeline Co.	Conwest Exploration Co. Ltd.	09-21-94	G-S	9,137	N	F	09-01-94	10-31-04
ST94-6625	Northern Border Pipeline Co.	Transcontinental Gas Pipe Line Corp.	09-21-94	G	7,820	N	F	09-01-94	08-31-95
ST94-6626	Northern Border Pipeline Co.	Prairielands Energy Mkt., Inc.	09-21-94	G-S	4,180	N	F	09-15-94	09-14-95
ST94-6627	Mojave Pipeline Operating Co.	Chevron U.S.A. Production Co.	09-21-94	G-S	50,000	N	I	09-01-94	08-30-95
ST94-6628	Mojave Pipeline Operating Co.	Tristar Gas Marketing Co.	09-21-94	G-S	20,000	N	I	08-31-94	08-28-95
ST94-6629	Mojave Pipeline Operating Co.	U.S. Gas Transportation Inc.	09-21-94	G-S	100,000	N	I	08-31-94	08-28-95
ST94-6630	Tennessee Gas Pipeline Co.	Valley Gas Co	09-22-94	G-S	2,300	N	F	09-01-94	Indef.
ST94-6631	Tennessee Gas Pipeline Co.	GGR Energy	09-22-94	G-S	1,000	N	I	09-01-94	Indef.
ST94-6632	Midwestern Gas Transmission Co.	Tenneco Gas Marketing Co.	09-22-94	G-S	25,000	N	F	09-01-94	Indef.
ST94-6633	Midwestern Gas Transmission Co.	Mobil Natural Gas Inc	09-22-94	G-S	7,406	N	F	09-01-94	Indef.
ST94-6634	Midwestern Gas Transmission Co.	Tenneco Gas Marketing Co.	09-22-94	G-S	5,476	N	F	09-01-94	Indef.
ST94-6635	Midwestern Gas Transmission Co.	Tenneco Gas Marketing Co.	09-22-94	G-S	5,000	N	F	09-03-94	Indef.
ST94-6636	Texas Eastern Transmission Corp.	Orange and Rockland Utilities, Inc.	09-22-94	G-S	507	N	F	09-01-94	Indef.
ST94-6637	Texas Eastern Transmission Corp.	Orange and Rockland Utilities, Inc.	09-22-94	G-S	384	N	F	09-01-94	Indef.
ST94-6638	Texas Eastern Transmission Corp.	Northern Utilities Inc	09-22-94	G-S	64	N	F	09-01-94	Indef.
ST94-6639	Texas Eastern Transmission Corp.	North Attleboro Gas Co .	09-22-94	G-S	16	N	F	09-01-94	Indef.
ST94-6640	Texas Eastern Transmission Corp.	North Attleboro Gas Co .	09-22-94	G-S	12	N	F	09-01-94	Indef.
ST94-6641	Texas Eastern Transmission Corp.	New Jersey Natural Gas Co.	09-22-94	G-S	110	N	F	09-01-94	Indef.
ST94-6642	Texas Eastern Transmission Corp.	General Motors Corp	09-22-94	G-S	11,858	N	F	09-01-94	Indef.
ST94-6643	Texas Eastern Transmission Corp.	Anadarko Trading Co	09-22-94	G-S	400,000	N	I	09-01-94	Indef.
ST94-6644	Texas Eastern Transmission Corp.	Bristol & Warren Gas Co	09-22-94	G-S	36	N	F	09-01-94	Indef.
ST94-6645 ..	Texas Eastern Transmission Corp.	Bristol & Warren Gas Co	09-22-94	G-S	27	N	F	09-01-94	Indef.
ST94-6646 .	Texas Eastern Transmission Corp.	Boston Gas Co	09-22-94	G-S	2,932	N	F	09-01-94	Indef.
ST94-6647	Texas Eastern Transmission Corp.	Boston Gas Co	09-22-94	G-S	2,218	N	F	09-01-94	Indef.
ST94-6648	Texas Eastern Transmission Corp.	Bay State Gas Co	09-22-94	G-S	1,056	N	F	09-01-94	Indef.
ST94-6649	Texas Eastern Transmission Corp.	Peco Energy Co	09-22-94	G-S	49,286	N	F	09-01-94	Indef.
ST94-6650 ...	Texas Eastern Transmission Corp.	NGC Transportation Inc .	09-22-94	G-S	30,000	N	I	09-08-94	Indef.
ST94-6651 ..	Texas Eastern Transmission Corp.	Phibro Energy, Inc	09-22-94	G-S	100,000	N	I	09-10-94	Indef.
ST94-6652	Texas Eastern Transmission Corp.	Anadarko Trading Co	09-22-94	G-S	60,000	N	I	09-01-94	Indef.
ST94-6653	Texas Eastern Transmission Corp.	Noble Gas Marketing, Inc.	09-22-94	G-S	87,500	N	I	09-01-94	Indef.
ST94-6654	Texas Eastern Transmission Corp.	New Jersey Natural Gas Co.	09-22-94	G-S	83	N	F	09-01-94	Indef.
ST94-6655	Texas Eastern Transmission Corp.	Fall River Gas Co	09-22-94	G-S	327	N	F	09-01-94	Indef.
ST94-6656	Texas Eastern Transmission Corp.	Dartmouth Power	09-22-94	G-S	209	N	F	09-01-94	Indef.
ST94-6657	Texas Eastern Transmission Corp.	Dartmouth Power	09-22-94	G-S	158	N	F	09-01-94	Indef.

Docket No.[1]	Transporter/seller	Recipient	Date filed	Part 284 subpart	Est. max. daily quantity[2]	Aff. Y/A/N[3]	Rate sch.	Date commenced	Projected termination date
ST94-6658	Texas Eastern Transmission Corp.	Consolidated Edison Co. of NY, Inc.	09-22-94	G-S	240	N	F	09-01-94	Indef.
ST94-6659	Texas Eastern Transmission Corp.	Consolidated Edison Co. of NY, Inc.	09-22-94	G-S	181	N	F	09-01-94	Indef.
ST94-6660	Texas Eastern Transmission Corp.	Connecticut Natural Gas Corp.	09-22-94	G-S	851	N	F	09-01-94	Indef.
ST94-6661	Texas Eastern Transmission Corp.	Commonwealth Gas Co	09-22-94	G-S	1,015	N	F	09-01-94	Indef.
ST94-6662	Texas Eastern Transmission Corp.	Commonwealth Gas Co	09-22-94	G-S	1,342	N	F	09-01-94	Indef.
ST94-6663	Texas Eastern Transmission Corp.	Colonial Gas Co	09-22-94	G-S	307	N	F	09-01-94	Indef.
ST94-6664	Texas Eastern Transmission Corp.	Colonial Gas Co	09-22-94	G-S	233	N	F	09-01-94	Indef.
ST94-6665	Texas Eastern Transmission Corp.	Providence Gas Co	09-22-94	G-S	944	N	F	09-01-94	Indef.
ST94-6666	Texas Eastern Transmission Corp.	Providence Gas Co	09-22-94	G-S	715	N	F	09-01-94	Indef.
ST94-6667	El Paso Natural Gas Co	Cenergy, Inc	09-22-94	G-S	10,000	N	I	08-25-94	Indef.
ST94-6668	Valero Transmission, L.P	Northern Natural Gas Co	09-22-94	C	10,000	N	I	09-01-94	Indef.
ST94-6669	Noram Gas Transmission Co.	Sunbeam Outdoor Products.	09-22-94	G-S	310	N	F	09-01-94	Indef.
ST94-6670	Noram Gas Transmission Co.	Vesta Energy Co	09-22-94	G-S	300,000	N	I	08-01-94	Indef.
ST94-6671	Noram Gas Transmission Co.	Laclede Gas Co	09-22-94	G-S	61,053	N	I	08-01-94	Indef.
ST94-6672	Noram Gas Transmission Co.	Transok Gas Co	09-22-94	G-S	300,000	N	I	08-01-94	Indef.
ST94-6673	Noram Gas Transmission Co.	Jacksonville Manufacturing.	09-22-94	G-S	1,300	N	F	08-01-94	Indef.
ST94-6674	Noram Gas Transmission Co.	Sanguine, Ltd	09-22-94	G-S	20,000	N	I	09-01-94	Indef.
ST94-6675	Noram Gas Transmission Co.	Continental Grain Co	09-22-94	G-S	600	N	F	09-01-94	Indef.
ST94-6676	Noram Gas Transmission Co.	AIG Trading Corp	09-22-94	G-S	100,000	N	I	08-01-94	Indef.
ST94-6677	Columbia Gas Transmission Corp.	Gaslantic Corp	09-22-94	G-S	N/A	N	I	09-12-94	Indef.
ST94-6678	Columbia Gas Transmission Corp.	Sonat Marketing Co	09-22-94	G-S	50,000	N	I	09-01-94	Indef.
ST94-6679	Columbia Gas Transmission Corp.	General Electric Ky Glass Plant.	09-22-94	G-S	N/A	N	I	09-20-94	Indef.
ST94-6680	Columbia Gas Transmission Corp.	Libby Glass, Inc	09-22-94	G-S	N/A	N	I	09-20-94	Indef.
ST94-6681	Columbia Gas Transmission Corp.	Columbia Gas of Kentucky, Inc.	09-22-94	B	40,000	Y	I	09-01-94	Indef.
ST94-6682	Kern River Gas Transmission Co.	Union Pacific Fuels, Inc .	09-23-94	G-S	25,000	N	F	09-01-94	07-31-95
ST94-6683	Noram Gas Transmission Co.	Amoco Energy Trading ..	09-22-94	G-S	300,000	N	I	09-01-94	Indef.
ST94-6684	Enogex Inc	Natural Gas P/L Co. of America.	09-23-94	C	30,000	N	I	09-01-94	Indef.
ST94-6685	Natural Gas P/L Co. of America.	Mobil Natural Gas Inc	09-23-94	G-S	15,000	N	F	09-01-94	09-30-94
ST94-6686	Northern Natural Gas Co	Freeman Energy, Inc	09-23-94	G-S	200	N	I	09-01-93	08-31-95
ST94-6687	Transwestern Pipeline Co.	Richardson Products Co	09-23-94	G-S	13,000	N	F	09-01-94	09-30-94
ST94-6688	Transwestern Pipeline Co.	GPM Gas Corp	09-23-94	G-S	27,000	N	F	09-01-94	09-30-94
ST94-6689	Transwestern Pipeline Co.	Tristar Gas Marketing	09-23-94	G-S	50,000	N	F	08-23-94	08-31-94
ST94-6690	Transwestern Pipeline Co.	Richardson Products Co	09-23-94	G-S	5,364	N	F	08-24-94	08-31-94
ST94-6691	CNG Transmission Corp	Sabine Hub Services Co	09-23-94	G-S	500,000	N	I	09-01-94	10-31-94
ST94-6692	CNG Transmission Corp	Energy Marketing Services, Inc.	09-23-94	G-S	50,000	N	I	09-01-94	10-31-94
ST94-6693	Transok Gas Transmission Co.	ANR Pipeline Co., et al .	09-23-94	C	3,000	N	I	09-01-94	Indef.
ST94-6694	Transok Gas Transmission Co.	ANR Pipeline Co., et al .	09-23-94	C	3,000	N	I	09-01-94	Indef.

Docket No.[1]	Transporter/seller	Recipient	Date filed	Part 284 subpart	Est. max. daily quantity[2]	Aff. Y/A/N[3]	Rate sch.	Date commenced	Projected termination date
ST94-6695	Transok Gas Transmission Co.	ANR Pipeline Co., et al .	09-23-94	C	3,000	N	I	09-01-94	Indef.
ST94-6696	Transok Gas Transmission Co.	ANR Pipeline Co., et al .	09-23-94	C	3,000	N	I	09-01-94	Indef.
ST94-6697	Transok Gas Transmission Co.	ANR Pipeline Co., et al .	09-23-94	C	3,000	N	I	09-01-94	Indef.
ST94-6698	Transok Gas Transmission Co.	ANR Pipeline Co., et al .	09-23-94	C	3,000	N	I	09-01-94	Indef.
ST94-6699	Transok Gas Transmission Co.	ANR Pipeline Co., et al .	09-23-94	C	3,000	N	I	09-01-94	Indef.
ST94-6700	Transok Gas Transmission Co.	ANR Pipeline Co., et al .	09-23-94	C	3,000	N	I	09-01-94	Indef.
ST94-6701	Transok Gas Transmission Co.	ANR Pipeline Co., et al .	09-23-94	C	7,500	N	I	09-01-94	Indef.
ST94-6702	Transok Gas Transmission Co.	ANR Pipeline Co., et al .	09-23-94	C	3,000	N	I	09-01-94	Indef.
ST94-6703	Sabine Pipe Line Co	Memphis Light, Gas and Water Div.	09-26-94	G-S	50,000	N	I	09-01-94	Indef.
ST94-6704	Sabine Pipe Line Co	H&N Gas, Ltd	09-26-94	G-S	100,000	N	I	09-02-94	Indef.
ST94-6705	Great Lakes Gas Trans. L.P.	Coastal Gas Marketing Co.	09-26-94	G-S	50,000	Y	F	09-01-94	07-31-95
ST94-6706	Great Lakes Gas Trans. L.P.	Westcoast Gas Services (USA), Inc.	09-26-94	G-S	50,000	N	F	09-01-94	07-31-95
ST94-6707	Pacific Gas Transmission Co.	Mock Resources, Inc	09-26-94	G-S	50,000	N	I	09-01-94	Indef.
ST94-6708	Tennessee Gas Pipeline Co.	Aquila Energy Resources Corp.	09-26-94	G-S	1,875	N	F	09-01-94	Indef.
ST94-6709	Midwestern Gas Transmission Co.	Associated Natural Gas, Inc.	09-26-94	G-S	25,000	N	F	09-01-94	Indef.
ST94-6710	Midwestern Gas Transmission Co.	Associated Natural Gas, Inc.	09-26-94	G-S	17,000	N	F	09-02-94	Indef.
ST94-6711	Midwestern Gas Transmission Co.	H&N Gas, Ltd	09-26-94	G-S	5,000	N	F	09-01-94	Indef.
ST94-6712	Delhi Gas Pipeline Corp	Natural Gas P/L Co. of America.	09-26-94	C	40,000	N	I	09-01-94	Indef.
ST94-6713	Ozark Gas Transmission System.	Interenergy Gas Services.	09-26-94	G-S	20,000	N	I	09-01-94	Indef.
ST94-6714	Southern Natural Gas Co.	South Carolina Pipeline Corp.	09-23-94	G-S	18,000	N	F	09-02-94	07-31-97
ST94-6715	Southern Natural Gas Co.	Ford Motor Co	09-23-94	G-S	1,066	N	F	09-01-94	09-30-94
ST94-6716	Transcontinental Gas P/L Corp.	Statoil North America, Inc.	09-27-94	G-S	100,000	N	I	09-01-94	Indef.
ST94-6717	Transcontinental Gas P/L Corp.	Sonat Marketing Co	09-27-94	G-S	10,000	N	I	09-01-94	Indef.
ST94-6718	Transcontinental Gas P/L Corp.	South Jersey Energy Co	09-27-94	G-S	4,000,000	N	I	09-14-94	Indef.
ST94-6719	Transcontinental Gas P/L Corp.	El Paso Gas Marketing Co.	09-27-94	G-S	350,000	N	I	09-02-94	Indef.
ST94-6720	Panhandle Eastern Pipe Line Co.	Midwest Gas Services, Inc.	09-28-94	G-S	6,000	N	F	09-03-94	03-31-95
ST94-6721	Panhandle Eastern Pipe Line Co.	Union Gas Limited	09-28-94	G-S	200,000	N	I	09-07-94	10-31-94
ST94-6722	Texas Eastern Transmission Corp.	Yankee Gas Services Co.	09-28-94	G-S	804	N	F	09-01-94	Indef.
ST94-6723	Texas Eastern Transmission Corp.	Yankee Gas Services Co.	09-28-94	G-S	1,064	N	F	09-01-94	Indef.
ST94-6724	Texas Eastern Transmission Corp.	Algonquin Gas Transmission Co.	09-28-94	G	11,137	N	F	09-01-94	Indef.
ST94-6725	Texas Eastern Transmission Corp.	James River Paper Co., Inc.	09-28-94	G-S	5,000	N	F	09-01-94	Indef.
ST94-6726	Texas Eastern Transmission Corp.	Bay State Gas Co	09-28-94	G-S	36,369	N	F	09-01-94	Indef.
ST94-6727	Texas Eastern Transmission Corp.	Fall River Gas Co	09-28-94	G-S	17,048	N	F	09-01-94	Indef.
ST94-6728	Texas Eastern Transmission Corp.	Northern Utilities Inc	09-28-94	G-S	48	N	F	09-01-94	Indef.
ST94-6729	Texas Eastern Transmission Corp.	Connecticut Natural Gas Corp.	09-28-94	G-S	644	N	F	09-01-94	Indef.
ST94-6730	El Paso Natural Gas Co	Nevada Power Co	09-28-94	G-S	51,500	N	I	08-18-94	Indef.

Docket No.[1]	Transporter/seller	Recipient	Date filed	Part 284 subpart	Est. max. daily quantity[2]	Aff. Y/A/N[3]	Rate sch.	Date commenced	Projected termination date
ST94-6731	Natural Gas P/L Co. of America.	Westvaco Corp	09-28-94	G-S	500	N	I	05-01-94	Indef.
ST94-6732	Natural Gas P/L Co. of America.	International Paper Co ...	09-28-94	G-S	25,000	N	F	09-01-94	12-31-98
ST94-6733	Natural Gas P/L Co. of America.	End Users Supply Co	09-28-94	G-S	300	N	I	10-01-90	Indef.
ST94-6734	Koch Gateway Pipeline Co.	Entex, a Division of Arkla, Inc.	09-28-94	G-S	20,000	N	F	09-20-94	Indef.
ST94-6735	Koch Gateway Pipeline Co.	Arcadian Corp	09-28-94	G-S	55,000	N	F	09-20-94	Indef.
ST94-6736	Koch Gateway Pipeline Co.	Olympic Pipeline Co	09-28-94	G-S	1,700	N	F	09-20-94	Indef.
ST94-6737	Koch Gateway Pipeline Co.	Gulf Gas Utilities Co	09-28-94	G-S	85	N	F	09-20-94	Indef.
ST94-6738	Koch Gateway Pipeline Co.	Pennzoil Gas Marketing Co.	09-28-94	G-S	1,550	N	F	09-20-94	Indef.
ST94-6739	Koch Gateway Pipeline Co.	Entex, a Division of Arkla, Inc.	09-28-94	G-S	6,000	N	F	09-20-94	Indef.
ST94-6740	Tennessee Gas Pipeline Co.	Belden & Blake Corp	09-28-94	G-S	4,150	N	F	09-01-94	Indef.
ST94-6741	Panhandle Eastern Pipe Line Co.	General Motors Corp	09-29-94	G-S	15,202	N	F	09-01-94	08-31-97
ST94-6742	Panhandle Eastern Pipe Line Co.	Vesta Energy Co	09-29-94	G-S	61,050	N	F	09-01-94	10-31-96
ST94-6743	El Paso Natural Gas Co	Meridian Oil Trading Inc	09-29-94	G-S	2,060	N	I	09-01-94	Indef.
ST94-6744	Colorado Interstate Gas Co.	The Western Sugar Co ..	09-29-94	G-S	1,240	N	I	09-19-94	Indef.
ST94-6745	Panhandle Eastern Pipe Line Co.	Vesta Energy Co	09-29-94	G-S	60,000	N	F	09-01-94	10-31-96
ST94-6746	Midcon Texas Pipeline Corp.	Koch Gateway Pipeline Co.	09-30-94	C	200,000	N	I	08-31-94	Indef.
ST94-6747	Panhandle Eastern Pipe Line Co.	National Helium Corp	09-30-94	G-S	30,000	Y	F	09-01-94	10-31-94
ST94-6748	Panhandle Eastern Pipe Line Co.	Semco Energy Services, Inc.	09-30-94	G-S	15,000	N	F	09-01-94	12-31-94
ST94-6749	Natural Gas P/L Co. of America.	1 Source Energy Services Co.	09-30-94	G-S	10,000	N	F	09-01-94	09-30-94
ST94-6750	Natural Gas P/L Co. of America.	GM Hydrocarbons, Ltd ..	09-30-94	G-S	10,000	N	I	09-01-94	Indef.
ST94-6751	Natural Gas P/L Co. of America.	Central Illinois Light Co .	09-30-94	G-S	20,000	N	F	09-01-94	08-31-97
ST94-6752	Natural Gas P/L Co. of America.	H & N Gas Ltd	09-30-94	G-S	50,000	N	I	09-01-94	Indef.
ST94-6753	Mississippi River Trans. Corp.	National Steel Corp	09-30-94	G-S	2,000	N	F	09-01-94	Indef.
ST94-6754	Mississippi River Trans. Corp.	MRT Energy Marketing Co.	09-30-94	G-S	753	A	F	09-01-94	01-31-95
ST94-6755	Iroquois Gas Trans. System.	CNG Gas Services Corp	09-30-94	G-S	15,000	N	F	09-01-94	09-28-94
ST94-6756	Iroquois Gas Trans. System.	Renaissance Energy (U.S.) Inc.	09-30-94	G-S	11,953	N	F	09-17-94	09-28-94
ST94-6757	Iroquois Gas Trans. System.	Direct Gas Supply/Iesco, Inc.	09-30-94	G-S	3,138	N	F	09-01-94	09-28-94
ST94-6758	Iroquois Gas Trans. System.	Coastal Gas Marketing Co.	09-30-94	G-S	20,000	N	F	09-21-94	09-28-94
ST94-6759	Williston Basin Inter. P/L Co.	Mock Resources, Inc	09-30-94	G-S	10,000	A	I	09-01-94	08-31-96
ST94-6760	Williston Basin Inter. P/L Co.	Western Sugar Co	09-30-94	G-S	9,000	A	I	09-01-94	08-31-96

[1] Notice of transactions does not constitute a determination that filings comply with Commission regulations in accordance with Order No. 436 (final rule and notice requesting supplemental comments, 50 FR 42,372, 10/10/85).

[2] Estimated maximum daily volumes includes volumes reported by the filing company in MMBTU, MCF and DT.

[3] Affiliation of reporting company to entities involved in the transaction. A "Y" indicates affiliation, an "A" indicates marketing affiliation, and a "N" indicates no affiliation.

[FR Doc. 94-26133 Filed 10-20-94; 8:45 am]

BILLING CODE 6717-01-P

Notice of Informal Technical Conference; State of Louisiana Office of Conservation, NGPA Section 107(c)(2) Well Determinations

[FERC No. JD94–04615, Edna Decambre #1; FERC No. JD94–06209, Exxon Fee #13; FERC No. JD94–06208, Exxon Fee #16–Alt; FERC No. JD94–06207, Exxon Fee #18–Alt; FERC No. JD94–06206, Exxon Fee #24]

October 17, 1994.

Take notice that an informal technical conference will be convened in the above-referenced proceedings (59 FR 40349, August 8, 1994) on October 26, 1994, at 10:30 am. The conference will be held at the offices of the Federal Energy Regulatory Commission, at 825 North Capitol Street NE, Washington D.C., 20426, in Room No. 3400–B. For further information, contact Ms. Marilyn Rand, at (202) 208–0444, or Mr. Marc Poole, at (202) 208–0482.

Lois D. Cashell,

Secretary.

[FR Doc. 94–26127 Filed 10–20–94; 8:45 am]

BILLING CODE 6717–01–M

[Project No. 11317–001 New York]

Carrob Energy Development, Inc.; Notice of Surrender of Preliminary Permit

October 17, 1994.

Take notice that the Carrob Energy Development, Inc., permittee for the Burrs Mill Project No. 11317, located on Jacobs Creek, Jefferson County, New York, has requested that its preliminary permit be terminated. The preliminary permit was issued on December 9, 1992, and would have expired on November 30, 1995. The permittee states that the project would be economically infeasible.

The permittee filed the request on July 22, 1994, and the preliminary permit for Project No. 11317 shall remain in effect through the thirtieth day after issuance of this notice unless that day is a Saturday, Sunday or holiday as described in 18 CFR 385.2007, in which case the permit shall remain in effect through the first business day following that day. New applications involving this project site, to the extent provided for under 18 CFR part 4, may be filed on the next business day.

Lois D. Cashell,

Secretary.

[FR Doc. 94–26130 Filed 10–20–94; 8:45 am]

BILLING CODE 6717–01–M

[Project No. 11305–001 New York]

Carrob Energy Development, Inc.; Notice of Surrender of Preliminary Permit

October 17, 1994.

Take notice that the Carrob Energy Development, Inc., permittee for the Sears Pond Project No. 11305, located on the East Branch of Deer River, Lewis County, New York, has requested that its preliminary permit be terminated. The preliminary permit was issued on October 19, 1992, and would have expired on September 30, 1995. The permittee states that the project would be economically infeasible.

The permittee filed the request on July 22, 1994, and the preliminary permit for Project No. 11305 shall remain in effect through the thirtieth day after issuance of this notice unless that day is a Saturday, Sunday or holiday as described in 18 CFR 385.2007, in which case the permit shall remain in effect through the first business day following that day. New applications involving this project site, to the extent provided for under 18 CFR part 4, may be filed on the next business day.

Lois D. Cashell,

Secretary.

[FR Doc. 94–26131 Filed 10–20–94; 8:45 am]

BILLING CODE 6717–01–M

[Docket No. TM95–1–48–001]

ANR Pipeline Co.; Notice of Proposed Changes in FERC Gas Tariff

October 17, 1994.

Take notice that on October 13, 1994, ANR Pipeline Company (ANR) tendered for filing as part of its Original Volume No. 2 FERC Gas Tariff, the following tariff sheets, proposed to be effective October 1, 1994:

Substitute Twenty-Fifth Revised Sheet No. 16
Substitute Twenty-Fifth Revised Sheet No. 17
Substitute Twenty-Fifth Revised Sheet No. 18
Substitute Twenty-Fifth Revised Sheet No. 19
Substitute Twenty-Seventh Revised Sheet No. 20
Substitute Twenty-Sixth Revised Sheet No. 21
Substitute Twenty-Fourth Revised Sheet No. 22

ANR states that the above-referenced tariff sheets are being filed solely for the purpose of updating the sheets originally submitted in this proceeding on August 31, 1994, in order to include intervening rate changes made as a result of a compliance filing made by ANR at Docket No. RP94–43–000, et al.

ANR states that all of its Original Volume No. 2 customers and interested State Commissions have been mailed a copy of this filing.

Any person desiring to protest said filing should file a protest with the Commission, 825 North Capitol Street, N.E., Washington, D.C. 20426 in accordance with Rule 211 of the Commission's Rules of Practice and Procedure (18 CFR 385.211). All such protests should be filed on or before October 24, 1994. Protests will be considered by the Commission in determining the appropriate action to be taken, but will not serve to make protestants parties to the proceeding. Copies of this application are on file with the Commission and are available for public inspection.

Lois D. Cashell,

Secretary.

[FR Doc. 94–26126 Filed 10–20–94; 8:45 am]

BILLING CODE 6717–01–M

[Docket No. RP94–424–001]

ANR Pipeline Co.; Notice of Proposed Changes in FERC Gas Tariff

October 17, 1994.

Take notice that on October 13, 1994, ANR Pipeline Company (ANR) tendered for filing as part of its FERC Gas Tariff, Original Volume No. 2, the following tariff sheets, proposed to be effective November 1, 1994:

Substitute Twenty-Sixth Revised Sheet No. 16
Substitute Twenty-Sixth Revised Sheet No 17
Substitute Twenty-Sixth Revised Sheet No. 18
Substitute Twenty-Sixth Revised Sheet No. 19
Substitute Twenty-Eighth Revised Sheet No. 20
Substitute Twenty-Seventh Revised Sheet No. 21
Substitute Twenty-Fifth Revised Sheet No. 22

ANR states that the above-referenced tariff sheets are being filed solely for the purpose of updating the sheets originally submitted in this proceeding on September 30, 1994, in order to include intervening rate changes made as a result of a compliance filing made by ANR at Docket No. RP94–43–000, et al.

ANR states that all of its Original Volume No. 2 customers and interested State Commissions have been mailed a copy of this filing.

Any person desiring to protest said filing should file a protest with the Commission, 825 North Capitol Street, N.E., Washington, D.C. 20426 in accordance with Rule 211 of the Commission's Rules of Practice and Procedure (18 CFR 385.211). All such protests should be filed on or before

October 24, 1994. Protests will be considered by the Commission in determining the appropriate action to be taken, but will not serve to make protestants parties to the proceeding. Copies of this application are on file with the Commission and are available for public inspection.

Lois D. Cashell,

Secretary.

[FR Doc. 94–26128 Filed 10–20–94; 8:45 am]

BILLING CODE 6717–01–M

[Docket No. RP94–312–001 and Docket No. CP94–177–001]

Columbia Gulf Transmission Co. and Texas Eastern Transmission Corp.; Notice of Compliance Filing

October 17, 1994.

Take notice that on October 13, 1994, Columbia Gulf Transmission Company (Columbia Gulf) tendered for filing as part of its FERC Gas Tariff, Second Revised Volume No. 1, the following tariff sheets to be effective November 1, 1994:

3rd Sub Second Revised Sheet No. 018
3rd Sub Second Revised Sheet No. 019

Columbia Gulf also filed supporting workpapers recalculating the exit fee entered into between it and Texas Eastern Transmission Corporation (Texas Eastern) using November 1, 1994, as the effective date and the unassigned capacity as of that date. Columbia Gulf further filed workpapers showing the calculation of the negative surcharge, which is reflected in the tariff sheets to be effective November 1, 1994.

Columbia Gulf states that this filing is being made in compliance with the Commission's Order in these proceedings dated September 28, 1994.

Columbia Gulf states that a copy of the filing is being served on all parties to these proceedings, and Columbia Gulf's customers, as required by the Commission's Order of September 28, 1994.

Any person desiring to protest said filing should file a protest with the Federal Energy Regulatory Commission, 825 North Capitol Street, N.E., Washington, D.C. 20426, in accordance with Rule 211 of the Commission's Rules of Practice and Procedures. All such protests should be filed on or before October 24, 1994. Protests will be considered by the Commission in determining the appropriate action to be taken, but will not serve to make protestants parties to the proceedings. Copies of this filing are on file with the Commission and are available for public inspection.

Lois D. Cashell,

Secretary.

[FR Doc. 94–26124 Filed 10–20–94; 8:45 am]

BILLING CODE 6717–01–M

[Docket No. PL95–1–000]

Ratemaking Treatment of Emission Allowances; Notice of Filing

October 14, 1994

Take notice that on October 14, 1994, Edison Electric Institute ("EEI"), on behalf of its member electric utilities and pursuant to Section 207 of the Commission's Rules of Practice and Procedure, petitioned the Commission to issue a Statement of Policy on the ratemaking treatment of the costs associated with sulfur dioxide (SO_2) emission allowances required by the Clean Air Act Amendments of 1990. EEI's request is limited to coordination transactions. EEI also requests, among other things, that the Commission find that neither the sale nor purchase of emission allowances require authorization under section 203 of the Federal Power Act, and find that the sale of emission allowances does not constitute a wholesale power sale and therefore is not jurisdictional under section 205 of the Federal Power Act.

Any person desiring to be heard or to protest said filing should file a motion to intervene or protest with the Federal Energy Regulatory Commission, 825 North Capitol Street, N.E., Washington, DC 20426, in accordance with Rules 211 and 214 of the Commission's Rules of Practice and Procedure (18 CFR 385.211 and 18 CFR 385.214). All such motions or protests should be filed on or before November 14, 1994. Protests will be considered by the Commission in determining the appropriate action to be taken, but will not serve to make the protestants parties to the proceeding. Any person wishing to become a party must file a motion to intervene. Copies of this filing are on file with the Commission and are available for public inspection.

Lois D. Cashell,

Secretary.

[FR Doc. 94–26135 Filed 10–20–94; 8:45 am]

BILLING CODE 6717–01–M

[Docket Nos. RP95–10–000 and RP94–332–003]

Florida Gas Transmission Co.; Notice of Proposed Changes in FERC Gas Tariff

October 17, 1994.

Take notice that on October 13, 1994, Florida Gas Transmission Company (FGT), tendered for filing to become part of its FERC Gas Tariff, Third Revised Volume No. 1, effective December 1, 1994, the tariff sheets listed on the attached Appendix A.

FGT states the instant filing proposes changes to FGT's FERC Gas Tariff which primarily correct minor errors and clarify certain provisions. Specifically, FGT submits the revised tariff sheets as follows:

Third Revised Sheet No. 1 reflects FGT's correction of two page references and adds Sheet No. 8D to the Table of Contents. Sheet No. 8D was filed September 22, 1994, in compliance with FERC's Order issued August 31, 1994, in Docket No. RP94–332.

Fourth Revised Sheet No. 43 and Third Revised Sheet No. 49 eliminate the designation of contacts authorized to perform day-to-day dispatching from the listing of information required when requesting ITS–1 and IPS transportation service. Due to the changing nature of this information, it is more expedient for FGT to obtain this data at the time nominations are furnished.

Second Revised Sheet No. 180 clarifies that FGT will retain variable costs, usage surcharges, and fuel charges prior to revenue sharing and crediting consistent with the sharing and crediting mechanism approved in Docket No. RS92–16.

Second Revised Sheet No. 183 corrects an error in the determination of Participating Firm Shippers' total share of Interruptible Shared Proceeds. Original Sheet No. 183 made effective November 1, 1993, contained the correct determination of the shared proceeds. When FGT filed First Revised Sheet No. 183 to change certain other provisions of this section, language from an earlier draft of this sheet, which never became effective, was inadvertently included. In addition, the term "Relinquishing Shipper" has been changed to "Participating Shipper" to conform with the terms used in this section.

First Revised Sheet Nos. 197A and 197C reflect an accounting change required by the FERC in Order No. 552. Two typographical errors also are corrected on Sheet No. 197C.

Second Revised Sheet Nos. 452, 459 and 462 and First Revised Sheet No. 463 delete references to and eliminate

Exhibit C from FGT's FTS–1 form of service agreement while designating and modifying Exhibit B to set forth the Maximum Daily Transportation Quantities formerly reflected on Exhibit C.

First Revised Sheet Nos. 454, 470, 485, 494A, 500 and 514 have been modified to clarify that the commencement of the primary term of a transportation service agreement between FGT and a Shipper may be different than the effective date of the service agreement.

Second Revised Sheet Nos. 499, 502, 504 and 507 and First Revised Sheet Nos. 500, 505 and 506 reflect certain modifications to FGT's ITS–1 form of service agreement solely for purposes of clarification. Second Revised Sheet Nos. 501 and 508 delete references to and eliminate Exhibit A from the ITS–1 form of service agreement. Third Revised Sheet No. 509 eliminates extraneous text from this page previously designated as "Reserved for Future Use".

Finally, First Revised Sheet No. 659 corrects two typographical errors reflected on FGT's Index of Requirements by End-Use Priority.

FGT states that copies of the filing were mailed to all customers serviced under the rate schedules affected by the filing and the interested state commissions.

Any person desiring to be heard or to protest said filing should file a motion to intervene or protest with the Federal Energy Regulatory Commission, 825 North Capitol Street, NE, Washington, DC 20426, in accordance with Sections 385.214 and 385.211 of the Commission's Rules and Regulations. All such motions or protests should be filed on or before October 24, 1994. Protests will be considered by the Commission in determining the appropriate action to be taken, but will not serve to make protestants parties to the proceeding.

Any person wishing to become a party must file a Motion to Intervene. Copies of this filing are on file with the Commission and are available for public inspection in the Public Reference Room.

Lois D. Cashell,

Secretary.

Appendix A—Florida Gas Transmission Company Docket No. RP95–10–000 FERC Gas Tariff Third Revised Volume 1

Third Revised Sheet No. 1
Fourth Revised Sheet No. 43
Third Revised Sheet No. 49
Second Revised Sheet No. 180
Second Revised Sheet No. 183
First Revised Sheet No. 197A
First Revised Sheet No. 197C
Second Revised Sheet No. 452
First Revised Sheet No. 454
Second Revised Sheet No. 459
Second Revised Sheet No. 462
First Revised Sheet No. 463
First Revised Sheet No. 470
First Revised Sheet No. 485
First Revised Sheet No. 494A
Second Revised Sheet No. 499
First Revised Sheet No. 500
Second Revised Sheet No. 501
Second Revised Sheet No. 502
Second Revised Sheet No. 504
First Revised Sheet No. 505
First Revised Sheet No. 506
Second Revised Sheet No. 507
Second Revised Sheet No. 508
Third Revised Sheet No. 509
First Revised Sheet No. 514
First Revised Sheet No. 659

[FR Doc. 94–26125 Filed 10–20–94; 8:45 am]

BILLING CODE 6717–01–M

[Docket No. CI93–13–000]

GPM Gas Corp.; Notice of Application to Abandon Exchange Service

October 17, 1994.

Take notice that on August 23, 1993, GPM Gas Corporation, Bartlesville, Oklahoma 74004, successor to Phillips 66 Natural Gas Company and Phillips Petroleum Company (Phillips), filed an application pursaunt to Section 7(b) of the Natural Gas Act for authorization permitting and approving the abandonment of an exchange of natural gas with Northern Natural Gas Company (Northern), all as more fully described in the application which is on file with the Commission and open to public inspection.

Phillips and Northern exchange natural gas under a June 17, 1968, exchange agreement. Phillips was authorized to perform the exchange in Docket No. CI68–816 under its FERC Gas Rate Schedule No. 450. GPM states that the parties have mutually agreed to terminate the exchange agreement and that the Commission authorized Northern to abandon the exchange on July 16, 1993.

Any person desiring to be heard or to make any protest with reference to said application should on or before October 31, 1994, file with the Federal Energy Regulatory Commission, Washington, DC 20426, a petition to intervene or a protest in accordance with the requirements of the Commission's Rules of Practice and Procedure (18 CFR 385.211 and 385.214). All protests filed with the Commission will be considered by it in determining the appropriate action to be taken but will not serve to make the protestants parties to the proceeding. Any person wishing to become a party in any proceeding herein must file a petition to intervene in accordance with the Commission's rules.

Under the procedure herein provided for, unless otherwise advised, it will be unnecessary for GPM to appear or to be represented at the hearing.

Lois D. Cashell,

Secretary.

[FR Doc. 94–26132 Filed 10–20–94; 8:45 am]

BILLING CODE 6717–01–M

[Docket No. RP95–8–000]

NorAm Gas Transmission Co.; Notice of Petition for Waiver

October 17, 1994.

Take notice that on October 7, 1994, NorAm Gas Transmission Company (NGT) filed a petition seeking the Commission's permission to waive the following provisions of Rate Schedules FSS and ISS of its FERC Gas Tariff for the current Storage Contract Year and subject to the condition specified in Paragraph 6 thereof:

(a) Section 2.7 of Rate Schedule FSS and section 2.5 of Rate Schedule ISS to the extent that either directs that Service Agreements commence at the beginning of a Storage Contract Year (April 1st);

(b) Section 6.1 of Rate Schedule FSS, which establishes certain minimum and maximum injection quantities, and Section 6.2 of Rate Schedule FSS, which establishes certain minimum and maximum withdrawal quantities; and

(c) The requirement in Rate Schedules FSS and ISS that gas be injected only during the Injection Period.

NGT requests that the Commission waive § 154.22 of the Commission's regulations to permit the requested waiver to become effective on October 1 1994.

Any person desiring to be heard or to protest said filing should file a motion to intervene or protest with the Federal Energy Regulatory Commission, 825 North Capitol Street, NE, Washington, DC 20426, in accordance with §§ 385.214 and 385.211 of the Commission's Rules and Regulations. All such motions or protests should be filed on or before October 24, 1994. Protests will be considered by the Commission in determining the appropriate action to be taken, but will not serve to make protestants parties to the proceeding. Any person wishing to become a party must file a Motion to Intervene. Copies of this filing are on file with the Commission and are

available for public inspection in the Public Reference Room.

Lois D. Cashell,

Secretary.

[FR Doc. 94–26129 Filed 10–20–94; 8:45 am]

BILLING CODE 6717–01–M

[Docket Nos. CP94–608–001, CP94–608–002, CP94–608–003, CP94–608–004]

Northern Natural Gas Co.; Notice of Amendment to Application

October 17, 1994.

Take notice that on October 7, 1994, Northern Natural Gas Company (Northern), 1111 South 103rd Street, Omaha, Nebraska 68124, filed an amendment (Amendment) to its original application in Docket No. CP94–608–000 which was filed pursuant to Section 7(b) of the Natural Gas Act for an order permitting and approving the abandonment by sale to Enron Gathering Company (EGC), a wholly owned subsidiary of Enron Operations Corp., certain compression, dehydrating, delivery point and pipeline facilities, with appurtenances, located in various counties in Texas, Oklahoma, Kansas, Wyoming and Colorado and services rendered thereby. Also, in its original application, Northern requests approval concurrent with the conveyance of the facilities to EGC to abandon certain agreements and services. Northern states that the Amendment: (1) Reflects changes in the Amended and Restated Contract for the Purchase and Sale of Assets, dated September 23, 1994, (Amended Contract); (2) clarifies certain elements of the original application; and (3) updated certain exhibits with additional information, all as more fully set forth in the amendment which is on file with the Commission and open to public inspection.

Northern states that it is amending the application to divide it into four parts, identifying the facilities on the basis of geographic production areas and requests that each partial assignment made by EGC to its four affiliates be given a separate subdocket to facilitate review along the geographic lines associated with each affiliate taking assignment from EGC. Northern indicates that, by assignments dated September 23, 1994, EGC has assigned the gathering facilities generally located in: (1) The Anadarko production area to Enron Anadarko Gathering Corp. (EAGC); (2) the Hugoton production area to Enron Gathering Limited Partnership (EGLP); (3) the Permian production area to Enron Permian Gathering Inc. (EPGI), and; (4) the Rocky Mountain region to Enron Mountain Gathering Inc. (EMGI). Northern states that, pursuant to the Amended Contract, EGC has made partial assignments of the gathering facilities to the four separate and distinct regional entities due to expressions of interest by third parties to purchase certain of these assets from EGC.

In the Amendment, Northern states that it is also refiling three large scale maps to make changes and clarifications to symbols, locations and functions of facilities identified on the maps. Further, Northern states that it is adding two delivery points on the Brewer system in the Hugoton production area located in Texas County, Oklahoma and the Jackson B#1 delivery point in the Anadarko production area located in Hansford County, Texas. Also, Northern is deleting the Clinton Oil Company delivery point from its list of delivery points since it is located on a transmission pipeline that is not included in the facilities to be abandoned, it is indicated.

Northern states that it is supplementing Exhibit W to replace a notice of termination of Rate Schedule T–5 with a consent letter to terminate Rate Schedule T–5 between Northern and Mobil Oil Corporation. Also, Northern states it is amending Exhibit U to delete its request to abandon Northern's Rate Schedule X–38 since the abandonment authorization has been requested in a separate proceeding.

Any person desiring to be heard or to make any protest with reference to said amendment should on or before November 7, 1994, file with the Federal Energy Regulatory Commission, Washington, D.C. 20426, a motion to intervene or a protest in accordance with the requirements of the Commission's Rules of Practice and Procedure (18 CFR 385.214 or 385.211) and the Regulations under the Natural Gas Act (18 CFR 157.10). All protests filed with the Commission will be considered by it in determining the appropriate action to be taken but will not serve to make the protestants parties to the proceeding. Any person wishing to become a party to a proceeding or to participate as a party in any hearing therein must file a motion to intervene in accordance with the Commission's Rules. All persons who have heretofore filed need not file again.

Lois D. Cashell,

Secretary.

[FR Doc. 94–26134 Filed 10–20–94; 8:45 am]

BILLING CODE 6717–01–M

Office of Fossil Energy

[FE Docket No. 94–59–NG]

Amoco Canada Marketing Corp.; Order Granting Blanket Authorization To Import Natural Gas From Canada

AGENCY: Office of Fossil Energy, DOE.

ACTION: Notice of order.

SUMMARY: The Office of Fossil Energy of the Department of Energy gives notice that it has issued an order granting Amoco Canada Marketing Corp. blanket authorization to import up to 200 Bcf of natural gas from Canada over a period of two years beginning on the date of first delivery after September 23, 1994. This order is available for inspection and copying in the Office of Fuels Programs Docket Room, Room 3F–056, Forrestal Building, 1000 Independence Avenue, S.W., Washington, D.C. 20585, (202) 586–9478. The docket room is open between the hours of 8:00 a.m. and 4:30 p.m., Monday through Friday, except Federal holidays.

Issued in Washington, D.C. on September 27, 1994.

Clifford P. Tomaszewski,

Director, Office of Natural Gas, Office of Fuels Programs, Office of Fossil Energy.

[FR Doc. 94–26182 Filed 10–20–94; 8:45 am]

BILLING CODE 6450–01–P

[FE Docket No. 94–63–NG]

Oryx Gas Marketing Limited Partnership; Order Granting Blanket Authorization To Import and Export Natural Gas, Including Liquefied Natural Gas, From and To Canada and Mexico

AGENCY: Office of Fossil Energy, DOE.

ACTION: Notice of order.

SUMMARY: The Office of Fossil Energy of the Department of Energy gives notice that it has issued an order granting Oryx Gas Marketing Limited Partnership authorization to import up to a combined total of 200 Bcf of natural gas, including liquefied natural gas (LNG), from Canada and Mexico. In addition, Oryx is authorized to export up to a combined total of 200 Bcf of natural gas, including LNG, to Canada and Mexico. The term of this authorization is for a period of two years beginning on the date of first import or export after September 30, 1994.

This order is available for inspection and copying in the Office of Fuels Programs docket room, 3F–056, Forrestal Building, 1000 Independence Avenue, SW., Washington, DC 20585, (202) 586–9478. The docket room is

open between the hours of 8:00 a.m. and 4:30 p.m., Monday through Friday, except Federal holidays.

Issued in Washington, DC, September 30, 1994.

Clifford P. Tomaszewski,

Director, Office of Natural Gas, Office of Fuels Programs, Office of Fossil Energy.

[FR Doc. 94–26184 Filed 10–20–94; 8:45 am]

BILLING CODE 6450–01–P

[FE Docket No. 94–71–NG]

Vector Energy (U.S.A.) Inc.; Order Granting Blanket Authorization To Import Natural Gas From Canada

AGENCY: Office of Fossil Energy, DOE.

ACTION: Notice of order.

SUMMARY: The Office of Fossil Energy of the Department of Energy gives notice that it has issued an order granting Vector Energy (U.S.A.) Inc. authorization to import up to 44 Bcf of natural gas from Canada over a two-year term, beginning on the date of first delivery after October 31, 1994.

Vector's order is available for inspection and copying in the Office of Fuels Programs Docket Room, 3F–056, Forrestal Building, 1000 Independence Avenue, S.W., Washington, D.C. 20585, (202) 586–9478. The docket room is open between the hours of 8:00 a.m. and 4:30 p.m., Monday through Friday, except Federal holidays.

Issued in Washington, D.C., October 12, 1994.

Clifford P. Tomaszewski,

Director, Office of Natural Gas, Office of Fuels Programs, Office of Fossil Energy.

[FR Doc. 94–26181 Filed 10–20–94; 8:45 am]

BILLING CODE 6450–01–P

[FE Docket No. 94–68–NG]

Wascana Energy Marketing (U.S.) Inc.; Order Granting Blanket Authorization To Import and Export Natural Gas, From and To Canada and Mexico

AGENCY: Office of Fossil Energy, DOE.

ACTION: Notice of order.

SUMMARY: The Office of Fossil Energy of the Department of Energy gives notice that it has issued an order granting Wascana Energy Marketing (U.S.) Inc. (WEM) blanket authorization to import and to export a combined total of up to 200 Bcf of natural gas from and to Canada and Mexico, over a two-year term, beginning on the date of first import or export delivery after December 31, 1994.

WEM's order is available for inspection and copying in the Office of Fuels Programs Docket Room, 3F–056, Forrestal Building, 1000 Independence Avenue, S.W., Washington, D.C. 20585, (202) 586–9478. The docket room is open between the hours of 8:00 a.m. and 4:30 p.m., Monday through Friday, except Federal holidays.

Issued in Washington, D.C., September 30, 1994.

Clifford P. Tomaszewski,

Director, Office of Natural Gas, Office of Fuels Programs, Office of Fossil Energy.

[FR Doc. 94–26186 Filed 10–20–94; 8:45 am]

BILLING CODE 6450–01–P

[FE Docket No. 94–67–NG]

Westcoast Gas Services Inc.; Order Granting Blanket Authorization To Import and Export Natural Gas, Including Liquefied Natural Gas, From and To Canada and Mexico

AGENCY: Office of Fossil Energy, DOE.

ACTION: Notice of order.

SUMMARY: The Office of Fossil Energy of the Department of Energy gives notice that it has issued an order granting Westcoast Gas Services Inc. (WGSI) authorization to import up to 1,000 Bcf and to export up to 1,000 Bcf of natural gas, including liquefied natural gas, from and to Canada and Mexico, over a two-year term, beginning on the date of first import or export delivery after December 18, 1994.

WGSI's order is available for inspection and copying in the Office of Fuels Programs Docket Room, 3F–056, Forrestal Building, 1000 Independence Avenue, S.W., Washington, D.C. 20585, (202) 586–9478. The docket room is open between the hours of 8:00 a.m. and 4:30 p.m., Monday through Friday, except Federal holidays.

Issued in Washington, D.C., October 11, 1994.

Clifford P. Tomaszewski,

Director, Office of Natural Gas, Office of Fuels Programs, Office of Fossil Energy.

[FR Doc. 94–26185 Filed 10–20–94; 8:45 am]

BILLING CODE 6450–01–P

[FE Docket No. 94–69–NG]

Western Gas Marketing Inc.; Order Granting Blanket Authorization To Import and Export Natural Gas

AGENCY: Office of Fossil Energy, DOE.

ACTION: Notice of order.

SUMMARY: The Office of Fossil Energy of the Department of Energy gives notice that it has issued an order granting Western Gas Marketing Inc., blanket authorization to import up to 600 Bcf of natural gas from Canada. In addition, the company is authorized to export a combined total of up to 150 Bcf of natural gas to Canada and Mexico. This authorization to import and export natural gas is for a period of two years beginning on the date of the initial import or export, whichever occurs first, after October 31, 1994.

This order is available for inspection and copying in the Office of Fuels Programs Docket Room, 3F–056, Forrestal Building, 1000 Independence Avenue, S.W., Washington, D.C. 20585, (202) 586–9478. The docket room is open between the hours of 8:00 a.m. and 4:30 p.m., Monday through Friday, except Federal holidays.

Issued in Washington, D.C. on October 4, 1994.

Clifford Tomaszewski,

Director, Office of Natural Gas, Office of Fuels Programs, Office of Fossil Energy.

[FR Doc. 94–26183 Filed 10–20–94; 8:45 am]

BILLING CODE 6450–01–P

Office of Hearings and Appeals

Notice of Issuance of Decisions and Orders During the Week of August 1 Through August 5, 1994

During the week of August 1 through August 5, 1994, the decisions and orders summarized below were issued with respect to applications for relief filed with the Office of Hearings and Appeals of the Department of Energy. The following summary also contains a list of submissions that were dismissed by the Office of Hearings and Appeals.

Request for Exception

Noltgas Propane Fuel & Supply, 8/2/94, LEE–0098

Noltgas Propane Fuel & Supply filed an Application for Exception from the reporting requirement of Form EIA–782B. In considering the request, the DOE found that the firm was not experiencing a serious hardship or gross inequity, as those terms have been defined by the DOE. Accordingly, exception relief was denied.

Whistleblower Proceeding

Dr. Naresh Mehta, 8/4/94, LWN–0003

The DOE issued an Order granting Dr. Naresh Mehta interim reinstatement to his former position at the Superconducting Super Collider Laboratory. On March 17, 1994, the DOE had found that Dr. Mehta's dismissal by Universities Research Association, a DOE contractor, violated the provisions of the Contractor Employee Protection Regulations, 10 CFR part 708. Although the DOE had ordered that Dr. Mehta be

reinstated in March 1994, the reinstatement was stayed by a request for review filed by Universities Research Association.

Refund Applications

The Office of Hearings and Appeals issued the following Decisions and Orders concerning refund applications, which are not summarized. Copies of the full texts of the Decisions and Orders are available in the Public Reference Room of the Office of Hearings and Appeals.

Atlantic Richfield Company/Transpo, Inc. *et al*	RF304–13485	08/04/94
Church of St. John the Baptist	RC272–239	08/01/94
Container Corp. of America	RF272–93313	08/02/94
Cosmo & Lillian Laserra *et al*	RF272–78570	08/04/94
Farmers Union Oil Company *et al*	RF272–93817	08/01/94
Fred H. Slate Co. *et al*	RF272–90536	08/01/94
Fulton County Illinois *et al*	RF272–86677	08/04/94
Gulf Oil Corporation/Downtown Gulf	RF300–18747	08/01/94
Olvey Gulf	RF300–18748	
Gulf Oil Corporation/F & L Planters, Inc. *et al*	RF300–21339	08/04/94
Gulf Oil Corporation/Jerry Dybul	RF300–16854	08/04/94
Gulf Oil Corporation/Little's Gulf	RF300–13191	08/01/94
Gulf Oil Corporation/Ormond Beach Gulf Servicecenter	RF300–20698	08/02/94
Gulf Oil Corporation/Tom Oil Company	RF300–20303	08/04/94
Northern Ohio Asphalt Paving, Co. *et al*	RF272–93834	08/04/94
Texaco Inc./Annel Tow Car, Inc.	RF321–21002	08/01/94
Texaco Inc./Bob Dossey's Texaco	RF321–21009	08/02/94
Texaco Inc./Lockard Grocery & Station	RF321–21019	08/05/94
Texaco Inc./Ray & Dave's Texaco #1 *et al*	RF321–19120	08/04/94
Texaco Inc./Sellers Texaco *et al*	RF321–8392	08/01/94
Town of Grafton Public Schools *et al*	RF272–88170	08/04/94

Dismissals

The following submissions were dismissed:

Name	Case No.
A.A.A. Awnings International, Inc	RF351–20
Bancroft Oil Company	RF321–19616
City of Highland Park	RF300–15813
City of Osseo	RF272–8348
Hibdon's Texaco	RF321–18981
Howard Texaco Service	RF321–7943
Larkin Texaco	RF321–18480
Mosside Texaco Service	RF321–7942
Osceola Township School District	RF272–79813
South of Sunny/Gainesville, Inc	RF300–21401
Tyre's Texaco & Car Cleaning	RF321–9704

Copies of the full text of these decisions and orders are available in the Public Reference Room of the Office of Hearings and Appeals, Room 1E–234, Forrestal Building, 1000 Independence Avenue, SW., Washington, DC 20585, Monday through Friday, between the hours of 1:00 p.m. and 5:00 p.m., except federal holidays. They are also available in Energy Management: Federal Energy Guidelines, a commercially published loose leaf reporter system.

Dated: October 17, 1994.

George B. Breznay,

Director, Office of Hearings and Appeals.

[FR Doc. 94–26180 Filed 10–20–94; 8:45 am]

BILLING CODE 6450–01–P–M

Implementation of Special Refund Procedures

AGENCY: Office of Hearings and Appeals, Department of Energy

ACTION: Notice of Implementation of Special Refund Procedures

SUMMARY: The Office of Hearings and Appeals (OHA) of the Department of Energy (DOE) announces the procedures for disbursement of the total amount of $2,226,782.70 in crude oil overcharges obtained by the DOE under the terms of a Consent Order that Mt. Airy Refining Company (Mt. Airy) and its former shareholders, William P. Boswell, W. Luke Boswell, Lindsay B. McLean, David P. Boswell, P. Wilson Boswell II and Ellen W. Boswell, entered into with DOE on November 14, 1990. Case No. LEF–0121. OHA has determined that the funds will be distributed in accordance with DOE's Modified Statement of Restitutionary Policy in Crude Oil Cases.

FOR FURTHER INFORMATION CONTACT: Thomas L. Wieker, Deputy Director, Office of Hearings and Appeals, 1000 Independence Avenue, S.W., Washington, D.C. 20585, (202) 586–2400.

SUPPLEMENTARY INFORMATION: In accordance with 10 CFR 205.282(c), notice is hereby given of the issuance of the Decision and Order set out below. The Decision sets forth the procedures that DOE has formulated to distribute the total amount of $2,226,782.70 obtained under the terms of a Consent Order that DOE entered into with Mt. Airy Refining Company and its former shareholders on November 14, 1990. The Consent Order settles claims by DOE that Mt. Airy had violated reporting provisions of the Mandatory Petroleum Allocation Regulations and the Administrative Procedures and Sanctions Regulations with regard to its sale of crude oil.

OHA will distribute the Mt. Airy Consent Order funds in accordance with DOE's Modified Statement of Restitutionary Policy in Crude Oil Cases (the MSRP). 51 FR 27899 (August 4,

1986). Under the MSRP, crude oil overcharge monies are divided between the Federal government, the states, and injured purchasers of refined petroleum products. Refunds to the states are distributed in proportion to each state's consumption of petroleum products during the price control period. Refunds to eligible purchasers are based on the total volume of petroleum products purchased and the degree to which they can demonstrate injury.

Because the June 30, 1994, deadline for crude oil refund applications has passed, no new applications from purchasers of refined petroleum products will be accepted for these funds. Instead, the share allocated to these purchasers will be added to the general crude oil overcharge pool used for direct restitution.

Dated: October 14, 1994.

George B. Breznay,

Director, Office of Hearings and Appeals.

Decision and Order of the Department of Energy

Implementation of Special Refund Procedures

October 14, 1994.

Name of Firm: Mt. Airy Refining Company.
Date of Filing: February 3, 1994.
Case Number: LEF-0121.

On February 3, 1994, the Economic Regulatory Administration (ERA) of the Department of Energy filed a Petition requesting that the Office of Hearings and Appeals (OHA) formulate and implement Subpart V special refund proceedings for crude oil overcharge funds. Under DOE procedural regulations, special refund proceedings may be implemented to refund monies to persons injured by violations of DOE petroleum price and allocation regulations, provided DOE is unable to readily identify such persons or ascertain the refund amount each person should receive. 10 CFR 205.280. We have considered ERA's request to formulate refund procedures for the disbursement of $2,226,782.70 remitted by Mt. Airy Refining Company (Mt. Airy) and its former shareholders, William P. Boswell, W. Luke Boswell, Lindsay B. McLean, David P. Boswell, P. Wilson Boswell II and Ellen W. Boswell, in connection with a Consent Order Mt. Airy and its former shareholders entered into with DOE and have determined that such procedures are appropriate.[1]

The Mt. Airy Consent Order funds were remitted to DOE to remedy the firm's alleged violation of the Mandatory Petroleum Allocation Regulations published at 10 CFR Part 211 and the provisions of the Administrative Procedures and Sanctions Regulations set forth at 10 CFR Part 205. These funds are being held in an escrow account established with the United States Treasury pending a determination of their proper distribution. This Decision sets forth OHA's plan to distribute those funds.

I. Jurisdiction and Authority

The general guidelines that govern OHA's ability to formulate and implement a plan to distribute refunds are set forth at 10 CFR Part 205, Subpart V. These procedures apply in situations where DOE cannot readily identify persons injured as a result of actual or alleged violations of its regulations or ascertain the refund amount each person should receive. For a more detailed discussion of Subpart V and OHA's authority to fashion procedures to distribute refunds see, *Office of Enforcement*, 9 DOE ¶ 82,508 (1981) and *Office of Enforcement*, 8 DOE ¶ 82,597 (1981).

II. Background

Mt. Airy operated a refinery in Mt. Airy, Louisiana from the date of its incorporation under the laws of the state of Ohio in 1977 until its dissolution on August 11, 1983. It was therefore a "refiner" as that term has been defined in the federal petroleum price and allocation regulations at 10 CFR § 211.62. As such, Mt. Airy was subject to the jurisdiction of DOE.

In accordance with the reporting requirements found at 10 CFR § 211.66(b)(h), Mt. Airy was required to submit a "Refiners Monthly Report" detailing its crude oil receipts, runs to stills and volume of crude oil processed. DOE reviewed Mt. Airy's compliance with these regulatory provisions during the course of an audit of Mt. Airy's principal business operations. The audit was conducted during the period beginning on January 1, 1977 and ending on January 27, 1981. On July 25, 1986, ERA issued a Proposed Remedial Order which found that Mt. Airy had improperly reported its crude oil receipts for the period beginning July 1977 and ending November 1977. ERA amended that Order on May 27, 1987 (the May 1987 Order) to include additional entitlement reporting violations by Mt. Airy.

The May 1987 Order states that Mt. Airy's violations resulted in its receipt of $2,059,649.94 in entitlements which it was not authorized to receive and directs Mt. Airy to refund the amount of its violation, plus interest. The Order further states that Mt. Airy shareholders were individually liable, to the extent that Mt. Airy's assets were distributed to them upon its dissolution in 1983, for refunding the violation amount. ERA found that shareholder liability in this case was predicated upon the "trust fund doctrine", which provides that stockholders who receive assets upon corporate dissolution hold those assets in trust for the payment of bona fide corporate debts incurred before dissolution. *See Bayport*, 18 DOE ¶ 83,007 at 86,058 (1989). Mt. Airy and its former shareholders vigorously contested the May 1987 Order in proceedings before OHA. Nonetheless, without admitting any violations whatsoever, they agreed to enter into a Consent Order with DOE on November 14, 1990, (the November 1990 Order) to settle the violations.

In accordance with the November 1990 Order, Mt. Airy and its former shareholders (1) paid the principal sum of two million dollars ($2,000,000.00), plus interest, in full and final settlement of all matters covered by the Order; and (2) agreed to retain (i) Mt. Airy's records evidencing sales volume data for each product subject to controls, during the period covered by the audit; and (ii) Mt. Airy's customers' names and addresses. The November 1990 Order requires Mt. Airy to retain the records described above for a period of thirty (30) days following DOE's final distribution of the Mt. Airy Consent Order funds or January 1, 2000, whichever occurs earlier. Mt. Airy shall make such information available to DOE, if so requested.

III. The Crude Oil Refund Procedures

A. Crude Oil Refund Policy

The monies remitted by Mt. Airy and its former shareholders will be distributed in accordance with DOE's Modified Statement of Restitutionary Policy in Crude Oil Cases (MSRP). *See* 51 Fed. Reg. 27899 (August 4, 1986). This policy has been utilized in all Subpart V proceedings involving alleged crude oil violations. *See* Order Implementing the MSRP, 51 Fed. Reg. 29689 (August 20, 1986) (the August 1986 Order).

Under the MSRP, 40 percent of the crude oil overcharge funds will be refunded to the federal government, another 40 percent to the states, and up to 20 percent may initially be reserved for the payment of claims by injured parties. The MSRP also specified that any monies remaining after all valid claims by injured purchasers are paid will be disbursed to the federal government and the states in equal amounts. See, *In re:* The Department of Energy Stripper Well Exemption Litigation, 653 F. Supp. 108 (D. Kan.), 6 Fed. Energy Guidelines ¶ 90,509 (1986) (the Stripper Well Settlement Agreement) for a more detailed discussion of the MSRP.

On April 10, 1987, the OHA issued a Notice analyzing the numerous comments received in response to the August 1986 Order. 52 Fed. Reg. 11737 (April 10, 1987) (the April 10 Notice). This Notice provided guidance to claimants that anticipated filing refund applications for crude oil monies under the Subpart V regulations. In general, we stated that all claimants would be required to (1) document their purchase volumes of petroleum products during the August 19, 1973 through January 27, 1981, crude oil price control period; and (2) prove they were injured by the alleged crude oil overcharges. End-users of petroleum products whose businesses are unrelated to the petroleum industry would be presumed to have been injured by the alleged crude oil overcharges and would not be required to submit proof of injury. *See City of Columbus, Georgia*, 16 DOE ¶ 85,550 (1987).

B. The Proposed Decision and Order

On June 3, 1994, OHA issued a Proposed Decision and Order (PDO) establishing tentative procedures to distribute the crude oil violation amount that had been obtained from Mt. Airy and its former shareholders.

[1] The alleged violations referred to in this Decision involve the sales of both crude oil and refined petroleum products. Because most of Mt. Airy's overcharges relate to crude oil, OHA has determined that the interests of administrative efficiency would best be served by considering all monies received to be the result of crude oil violations.

The amount of money covered by the PDO is $2,226,782.70, plus accrued interest. OHA tentatively concluded that the funds should be distributed in accordance with the MSRP and the April Notice. Pursuant to the MSRP, OHA proposed to reserve 20 percent of these funds ($445,357.00) for direct refunds to applicants who claim that they were injured by the crude oil violations. We stated that the remaining 80 percent of the funds would be distributed to the states and the federal government for indirect restitution. After all valid claims have been paid, any remaining funds in the claim reserve would also be divided between the states and the federal government. The federal government's share ultimately would be deposited into the general fund of the Treasury.

We provided a period of 30 days from the date of the PDO's publication in the **Federal Register** in which the public could submit comments regarding the tentative refund procedures. More than 30 days have elapsed, and the OHA has received no comments concerning the proposed procedures.

Under the terms of the MSRP, 80 percent of the crude oil violation amounts subject to this Decision or $1,781,426.00 in principal, plus accrued interest, should be disbursed in equal shares to the states and federal government for indirect restitution. Accordingly, we will direct the DOE's Office of the Controller to transfer one-half of that amount, or $890,713.00, plus interest, into an interest bearing subaccount for the states, and one-half, or $890,713.00, plus interest, into an interest bearing subaccount for the federal government. In accordance with previous practice, when the amount available for distribution to the states reaches $10 million, we will direct the DOE's Office of the Controller to make the appropriate disbursement to the individual states. Refunds to the states will be in proportion to the consumption of petroleum products in each state during the period of price controls. The share or ratio of the funds allocated to each state is contained in Exhibit H of the Stripper Well Agreement. When disbursed, these funds will be subject to the same limitations and reporting requirements that apply to any other crude oil funds received by the states in accordance with the Stripper Well Agreement.

We must also determine the appropriate method for disbursing the 20 percent of the fund available for direct restitution ($445,357). The application period for crude oil overcharge refunds ended on June 30, 1994. As we discussed in *King Petroleum, Inc.*, Case No. LEF-0125, August 8, 1994 (Proposed Decision and Order), we will not hold a separate refund proceeding for monies that become available for direct restitution after the June 30, 1994 closing date. 59 Fed. Reg. 41755 (August 15, 1994). Therefore, the funds in this case ($445,357) will be added to the general crude oil overcharge pool for direct restitution to those applicants who applied by the June 30, 1994 deadline.

It Is Therefore Ordered That:

(1) The Director of Special Accounts and Payroll, Office of Departmental Accounting and Financial Systems Development, Office of the Controller, Department of Energy, shall take all steps necessary to transfer $2,226,782.70, plus accrued interest, from the Mt. Airy Refining Company escrow account Number 650X00286Z, as specified in Paragraphs (2), (3) and (4) of this Decision.

(2) The Director of Special Accounts and Payroll shall transfer $890,713.00, plus accrued interest, of the funds referenced in Paragraph (1) above, into the subaccount denominated "Crude Tracking-States," Number 999DOE003W.

(3) The Director of Special Accounts and Payroll shall transfer $890,713.00, plus accrued interest, of the funds referenced in Paragraph (1) above, into the subaccount denominated "Crude Tracking-Federal," Number 999DOE002W.

(4) The Director of Special Accounts and Payroll shall transfer $445,357.00, plus accrued interest, of the funds referenced in Paragraph (1) above, into the subaccount denominated "Crude Tracking-Claimants 4," Number 999DOE0010Z.

(5) This is a final Order of the Department of Energy.

Dated: October 14, 1994.

George B. Breznay,

Director, Office of Hearings and Appeals.

[FR Doc. 94-26190 Filed 10-20-94; 8:45 am]

BILLING CODE 6450-01-P

ENVIRONMENTAL PROTECTION AGENCY

[FRL-5094-5]

Transfer of Data to Contractors

AGENCY: Environmental Protection Agency.

ACTION: Notice of Transfer of Data and Request for Comments.

SUMMARY: EPA will transfer to its contractor Hydrogeologic, Inc., and its subcontractors, SAIC, DPRA, Inc., Ambiotech, Inc., and S.S. Papadopulos, Inc., information which has been or will be submitted to EPA under Section 3007 of the Resource Conservation and Recovery Act (RCRA). Under RCRA, EPA is responsible for identification of hazardous wastes and the regulation of solid and hazardous waste management activities. The agency uses fate and transport models for these activities. Some of the information may have a claim of confidentiality.

DATES: Transfer of confidential data submitted to EPA will occur no sooner than October 31, 1994.

ADDRESSES: Comments should be sent to Margaret Lee, Document Control Officer, Office of Solid Waste (5305), U.S. Environmental Protection Agency, 401 M Street, SW., Washington, DC 20460. Comments should be identified as "Transfer of Confidential Data."

FOR FURTHER INFORMATION CONTACT: Margaret Lee, Document Control Officer, Office of Solid Waste (5305), U.S. Environmental Protection Agency, 401 M Street, SW., Washington, DC 20460, 202-260-3410.

SUPPLEMENTARY INFORMATION:

1. Transfer of Data

Under EPA Contract 68-W4-0017, Hydrogeologic, Inc., and its subcontractors will assist the Characterization and Assessment Division of the Office of Solid Waste in enhancing and implementing the fate and transport models to support the development of regulations for the identification of hazardous wastes and will perform categories of tasks such as validation and adaptation of models; modelling support; data collection and management; technical, statistical and regulatory support; and training and graphics support. Confidential Business Information submitted to the Office of Solid Waste program offices under Section 3007 of RCRA will be required to complete the above noted analyses. The contractor needs to access several agency sources including the Petroleum Refinery Database, the Toxic Release Inventory, the EPA National Survey of Hazardous Waste Generators, and Industries Studies Database. The data will be used to develop inputs to the models for predicting the fate and transport of contaminants from oily wastes. These results will be used for estimating risks to human health and the environment from the management of oily wastes so as to develop better policies for the protection of human health and the environment.

In accordance with 40 CFR 2.305(h), EPA has determined that Hydrogeologic, Inc., and its subcontractors, require access to CBI submitted to EPA under the authority of RCRA to perform work satisfactorily under the above-noted contract. EPA is submitting this notice to inform all submitters of CBI that EPA may transfer to these firms, on a need-to-know basis, CBI collected under the authority of RCRA. Upon completing their review of materials submitted, Hydrogeologic, Inc., will return all such materials to EPA.

Hydrogeologic, Inc., and its subcontractors have been authorized to have access to RCRA CBI under the EPA "Contractor Requirements for the Control and Security of RCRA Confidential Business Information Security Manual." EPA will review the security plan of the contractor and approve it prior to RCRA CBI being transmitted to the contractor. Hydrogeologic, Inc., and its subcontractors will be required to sign non-disclosure agreements and be briefed on appropriate security

procedures before they are permitted access to confidential information.

Dated: October 13, 1994.

Elliott P. Laws,

Assistant Administrator.

[FR Doc. 94–26021 Filed 10–20–94; 8:45 am]

BILLING CODE 6560–50–M

[ER–FRL–4716–5]

Environmental Impact Statements and Regulations; Availability of EPA Comments

Availability of EPA comments prepared October 03, 1994 Through October 07, 1994 pursuant to the Environmental Review Process (ERP), under Section 309 of the Clean Air Act and Section 102(2)(C) of the National Environmental Policy Act as amended. Requests for copies of EPA comments can be directed to the Office of Federal Activities at (202) 260–5076.

An explanation of the ratings assigned to draft environmental impact statements (EISs) was published in FR dated April 08, 1994 (59 FR 16807).

Draft EISs

ERP No. D–AFS–J65200–CO Rating EO2, Telluride Ski Area Expansion Project, Implementation, Special-Use-Permit and COE Section 404 Permit, Grand Mesa, Uncompahgre and Gunnion National Forests, Norwood Ranger District, San Miguel County, CO.

Summary

EPA expressed environmental objections due to potential impacts to air quality (carbon monoxide and PM–10) in the project area. EPA also requested additional discussion concerning the potential for degradation of air quality in an existing Class I airshed.

ERP No. D–AFS–J65219–WY Rating LO1, Shoshone National Forest Allowable Timber Sale Quantity, Implementation, Fremont, Hot Springs, Park, Sublette and Teton Counties, WY.

Summary

EPA had no objection to the proposed alternative.

ERP No. D–BLM–J60015–WY Rating LO1, Creston/Blue Gap Natural Gas and Oil Development Project, Construction and Operation, Special-Use-Permit, Right-of-Way and COE Section 404 Permit, Carbon and Sweetwater Counties, WY.

Summary

EPA had no objection to the project as proposed.

ERP No. DS–DOE–A22088–SC Rating EC2, Savannah River Site, Construction and Operation of Defense Waste Processing Facility, Updated Information, Aiken and Barnwell Counties, SC.

Summary

EPA had environmental concerns about the project due to the lack of detail on cumulative impacts as it relates to other pending EISs. EPA recommended that information from these EISs' be included in the final EIS.

Final EISs

ERP No. F–AFS–J02028–00. North Slope Oil and Gas Leasing, Application for Permit to Drill, High Uinta Mountain, Evanston and Mountain View Ranger District, Wasatch-Cache National Forest and Flaming Gorge District, Ashley National Forest, Intermountain Region, Summit and Daggett Counties, UT and Uinta County, WY.

Summary

EPA expressed environmental concerns regarding the lack of full discussion of air and water quality studies and monitoring requirement that should be provided in the leasing analysis documents.

ERP No. F–AFS–J65195–WY. Grand Targhee Ski Area Expansion Master Development Plan, Implementation, Targhee National Forest, Teton County, WY.

Summary

EPA had no objection to the project as proposed. Initial concerns regarding air quality have been adequately addressed in the final EIS.

ERP No. F–AFS–J65209–MT. Middle Fork Ecosystem Management Project, Implementation, Flathead National Forest, Hungry Horse Ranger District, Flathead River, Flathead County, MT.

Summary

EPA expressed environmental concerns regarding potential effects of proposed prescribed burning and protection of air quality in nearby Class I areas and nearby PM–10 nonattainment areas. EPA also indicated that some level of water quality monitoring would be appropriate to document effectiveness of BMPs and to assess actual sediment increases and aquatic biological effects.

ERP No. F–AFS–L65210–ID.West Fork Papoose Timber Sale, Implementation, Clearwater National Forest, Powell Ranger District, Idaho County, ID.

Summary

EPA continued to have environmental concerns regarding the sediment levels that currently exist in the Papoose Creek and Parachute Creek Watershed.

ERP No. F–BLM–J02029–WY.Enron Burly Field Oil and Gas Leasing, Permit to Drill, Temporary Use Permits, COE Section 404 Permit and Right-of-Way Grants, Pinedale Resource Area, Sublette County, WY.

Summary

EPA had no objection to the project as proposed. The Final EIS has adequately addressed groundwater quality issues and other concerns.

ERP No. F–COE–D39025–00.Anacostia River and Tributaries Feasibility Study relating to Restoration of Fish and Wild Habitat, Implementation, Prince George's and Montgomery Cos., MD, and DC.

Summary

EPA had no objection to the project as proposed.

ERP No. F–FHW–E40132–FL.North Suncoast Corridor, Transportation Improvement and Construction, Northwest Expressway Zone 1 in Hillsborough Co. to US 98 in Hernando Co. to Zone 2 FL–52 in Pasco Co., Funding, COE Section 404 Permit, Hillsborough, Hernando and Pasco Counties, FL.

Summary

EPA expressed environmental objections to the project due to significant wetland and upland resources impacts. EPA expressed concern that the proposed wetland mitigation relies too heavily on creation of new wetlands that have a low probability for success. EPA recommended that the alignment be reexamined during the final design stage to further reduce wetland upland losses.

ERP No. F–FHW–L40182–WA.Twin Bridges Replacement Project, Grosscup Road over the Yakima River, Funding and COE Section 10/404 Permit, Benton County, WA.

Summary

EPA provided no formal written comments. EPA had no objection to the preferred alternative as described in the EIS.

ERP No. F–SFW–G64011–LA.Bayou Sauvage National Wildlife Refuge Master Plan, Implementation, Orleans Parish, LA.

Summary

EPA had no objection to the action as proposed.

ERP No. F–SFW–J61090–SD.Conata Basin/Badlands Area Black-Footed Ferret Reintroduction, Implementation, Badlands National Park and Buffalo Gap

National Grassland, Conata Basin, several counties, SD.

Summary

EPA had no objection to the action as proposed.

ERP No. FS–AFS–J82005–MT.Lewis and Clark National Forest Noxious Weed Control Program, Updated Information, Implementation, several counties, MT.

Summary

Review of the Final Supplemental EIS has been completed and the project found to be satisfactory. No formal comment letter was sent to the preparing agency.

Dated: October 18, 1994.

William D. Dickerson,

Director, Federal Agency Liaison Division.

[FR Doc. 94–26145 Filed 10–20–94; 8:45 am]

BILLING CODE 6560–50–U

[ER–FRL–4716–4]

Environmental Impact Statements; Notice of Availability

Responsible Agency: Office of Federal Activities, General Information (202) 260–5076 OR (202) 260–5075. Weekly receipt of Environmental Impact Statements Filed October 10, 1994 Through October 14, 1994 Pursuant to 40 CFR 1506.9.

EIS No. 940422, Final Supplement, COE, WI, Wisconsin River Flood Protection, Updated Information concerning the Portage Canal Lock, General Design Memorandum and Flood Control Study, St. Paul District, Columbia County, WI, Due: November 21, 1994, Contact: Robert Whiting (612) 290–5264.

EIS No. 940423, Final EIS, AFS, CA, North Fork Kern/South Fork Kern Wild and Scenic Rivers Management Plan, Implementation, Sequoia and Inyo National Forests, Tulare and Kern Counties, CA, Due: November 21, 1994, Contact: Beverly Bauges (619) 376–3781.

EIS No. 940424, Final EIS, COE, ND, Lake Oahe Bridge Construction, midway between Bismarck and Mobridge, SD, Funding, Emmons and Sioux Counties, ND, Due: November 21, 1994, Contact: Richard E. Gorton (402) 221–4598.

EIS No. 940425, Final EIS, BLM, NV, Tonopah Resource Area, Resource Management Plan, Implementation, Battle Mountain District, Nye and Esmeralda Counties, NV, Due: November 21, 1994, Contact: Neil Talbot (702) 785–6485.

EIS No. 940426, Final Supplement, NPS, AZ, NV, Lake Mead National Recreation Area, General Management Plan, Updated Information on Willow Beach Development Concept Plan Amendment, AZ and NV, Due: November 21, 1994, Contact: Jim Holland (702) 293–8986.

EIS No. 940427, Draft EIS, COE, IL, Sugar Creek Municipal Water Supply Reservoir, COE Section 404 Permit Issuance, City of Marion, Williamson and Johnson Counties, IL, Due: December 31, 1994, Contact: Terry S. Siemsen (502) 582–5550.

EIS No. 940428, Draft EIS, COE, PR, Rio Fajardo Flood Control Feasibility Study, Flood Protection, Implementation, PR, Due: December 5, 1994, Contact: Barbara Cintron (904) 232–1692.

EIS No. 940429, Final EIS, COE, LA, Port Fourchon Navigation Channel Project, Channel Deepening, Implementation, Lafourche Parish, LA, Due: November 21, 1994, Contact: Richard E. Boe (504) 862–1505.

EIS No. 940430, Draft EIS, NAS, Cassini Spacecraft Exploration Mission, Explore the Planet Saturn, Implementation, Due: December 5, 1994, Contact: Peter B. Ulrich (202) 358–0290.

EIS No. 940431, Final EIS, USN, FL, Pensacola Naval Air Station Realignment, Relocation of Memphis Naval Air Station and Closure of San Diego Naval Training Center, Implementation, Pensacola Bay, FL, Due: November 21, 1994, Contact: Ronnie Lattimore (803) 743–0888.

EIS No. 940432, Draft EIS, NPS, WA, Elwha River Ecosystem Restoration, Implementation, Olympic National Park, Clallam County, WA, Due: December 20, 1994, Contact: Brian Winter (206) 452–0321.

EIS No. 940433, Draft EIS, BLM, CA, Rand Open Pit Heap Leach Gold Mine Project, Construction, Expansion and Operation, Conditional-Use-Permit Issuance and Plan of Operations and Reclamation Plan Approval, Randburg, Kern County, CA, Due: December 20,1994, Contact: Ahmend Mohsen (619) 375–7125.

Dated: October 18, 1994.

William D. Dickerson,

Director, Federal Agency Liaison Division.

[FR Doc. 94–26144 Filed 10–20–94; 8:45 am]

BILLING CODE 6560–50–U

[FRL–5095–1; ECAO–RTP–0671]

Workshop on Particulate Matter Mortality Epidemiological Research

AGENCY: Environmental Protection Agency.

ACTION: Notice of public meeting.

SUMMARY: The U.S. Environmental Protection Agency (EPA) is sponsoring a workshop to review selected epidemiology studies of relationships between particulate matter (PM) and mortality among human populations. The Environmental Criteria and Assessment Office (ECAO), within EPA's Office of Research and Development, is conducting the workshop to critically examine the subject studies to determine the extent to which these studies and supporting materials provide an adequate quantitative basis for determining PM exposure characteristics (particle sizes, concentrations, etc.) associated with any increased risk of human mortality/morbidity effects. This workshop is being held as part of the process for reviewing and, as appropriate, revising the EPA document Air Quality Criteria for Particulate Matter, to meet statutory requirements of the Clean Air Act.

DATES: The workshop will be held November 9 through 11, 1994, from 8:00 a.m. to 5:00 p.m., at the North Raleigh Hilton, Raleigh, NC. The workshop is open to the public, although seating will be limited and advanced registration is required. Interested parties should contact Ms. Emily Lee, U.S. Environmental Protection Agency, ECAO, MD–52, Research Triangle Park, NC 27711; telephone: 919–541–4169; fax 919–541–5078.

FOR FURTHER INFORMATION CONTACT: Dr. Allan Marcus, manager for the section of the chapter on epidemiological mortality studies, U.S. Environmental Protection Agency, ECAO, MD–52, Research Triangle Park, NC 27711; telephone 919–541–0636.

SUPPLEMENTAL INFORMATION: As discussed in a previous call for information (59 FR 17375, April 12, 1994), EPA is undertaking to review and where appropriate, update and revise the document, Air Quality Criteria for Particulate Matter. As part of this process, the scientific literature is reviewed for information that will help form the scientific bases on which decisions can be made with regard to possible revision of the National Ambient Air Quality Standards (NAAQS) for Particulate Matter (PM) under section 109(d) of the Clean Air Act. This workshop will include presentation and review of

methodological aspects and analytical results from newly emerging epidemiology studies that evaluate the potential health effects from PM exposure and are likely to be of much importance in addressing health effects issues in the revised PM criteria document. The 1994 workshop discussions and associated peer-review comments will provide inputs for consideration in the drafting of epidemiology chapter materials to be included in an initial draft of the revised PM criteria document. The epidemiology chapter (and other chapters) of that initial document draft will later undergo review at another experts' workshop to be held in early 1995 (as will be announced in a later **Federal Register** notice) before release of an external review draft of the document for public review and comment, and review by the Clean Air Scientific Advisory Committee (CASAC).

Copies of the research studies to be covered at the November 1994 workshop will be made available to the public at the time of the workshop. Members of the public will have an opportunity at the workshop to make brief, oral statements pertinent to the technical evaluation of the epidemiologic studies under review at the workshop. The workshop will not address the issue of possible revision of the current PM NAAQS per se. Interested parties also are invited to assist the EPA in developing and refining the scientific information base for PM by submitting new information on the topics covered at the workshop. To be considered for inclusion in the review process, submitted information should have been published or accepted for publication in a peer-reviewed, scientific journal. Such information should be submitted to Allan Marcus at the address provided.

Dated: October 17, 1994.

Carl R. Gerber,

Acting Assistant Administrator for Research and Development.

[FR Doc. 94–26189 Filed 10–20–94; 8:45 am]

BILLING CODE 6560–50–M

FEDERAL COMMUNICATIONS COMMISSION

Public Information Collection Request Submitted to Office of Management and Budget for Review

October 18, 1994.

The Federal Communications Commission has submitted the following information collection request to OMB for review and clearance under the Paperwork Reduction Act of 1980, 44 U.S.C. 3507. Persons wishing to comment on this information collection should contact Timothy Fain, Office of Management and Budget, Room 10102, NEOB, Washington, DC 20503, (202) 395–3561. For further information, contact Judy Boley, Federal Communications Commission, (202) 418–0210.

Please note: Pursuant to 5 CFR 1320.18, the Commission has requested expedited review of this collection by October 28, 1994.

Title: Universal Service Fund Data Request

Action: New Collection

Respondents: Business or other for-profit

Frequency of response: One time collection

Estimated Annual Burden: 1,439 respondents; average 60 hours per respondent; 86,340 hours total annual burden.

Needs and Uses: This information is being collected in conjunction with the Commission's Notice of Inquiry, CC Docket 80–286, FCC 94–199 (released August 30, 1994), that initiated review of the Commission's Part 36 Universal Service Fund rules, 47 CFR 36.125. This information will be used to evaluate the current rules and to study alternatives to those rules.

The foregoing estimates include the time for reviewing instructions, searching existing data sources, gathering and maintaining the data needed, and completing and reviewing the collection of information. Send comments regarding the burden estimates or any other aspect of the collection of information, including suggestions for reducing the burden, to the Federal Communications Commission, Records Management Branch, paperwork Reduction Project, Washington, DC 20554 and to the Office of Management and Budget Paperwork Reduction Project, Washington, DC 20503.

Federal Communications Commission.

William F. Caton,

Acting Secretary.

Universal Service Fund Data Request

Purpose of Request. This data request is begin issued in conjunction with the Federal Communications Commission's proceedings in CC Docket No. 80–286. The information will be used to study revisions or alternatives to the Commission's Part 36 rules governing high cost assistance and dial equipment minute weighting. See 47 CFR 36.601 through 36.641 and 36.125.

Technical Information. This data request consists of four Lotus 1–2–3 files. All four files are provided in .WK1, .WK3, and .WK4 Lotus versions. Versions prior to .WK4 will not show the shaded areas of the worksheets. Included with the .WK1 and .WK3 versions are the associated formatting files, .FMT and .FMT3. .WK4 does not require a formatting file.

All information should be submitted in hard copy form and on 3.5" computer diskettes in a Lotus format. Please use the Lotus file that corresponds to the most recent version of Lotus 1–2–3 in use by your company.

Because responses will be electronically compiled into a consolidated database, do not insert, delete, or move any rows, columns, or text, nor enter data into any cells other than those provided for data entry in the files as transmitted to you.

Organization of the Data Request. The four Lotus files request the following information:

File Number One: DATAREQ. Requests included in the first Lotus file seek information regarding subscribers and rates, financial and other information about specific plant categories, usage information, information regarding revenues, return, and investment for specified services, data pertaining to study area density and other characteristics of the service area, information about regulatory programs and about various service options, and information about competitive services provided by the respondent. *A separate response should be prepared for each study area.*

File Number Two: USF4301. The second file requests financial information pertinent to jurisdictional separations and access charges. It is structured consistently with FCC Form 43.01. *A separate response should be prepared for each study area.*

File Number Three: ZIPCODES. The third file requests a listing of all wire centers used to provide local telephone service in each study area, as well as the corresponding United States Postal Service zipcodes. *A separate response should be prepared for each study area.*

File Number Four: OPCODATA. The fourth file requests financial information at the telephone operating company level. *A separate response should be prepared for each operating company.*

Completion Mandatory for Specified Companies. Completion and return of this data request is mandatory for all telephone companies that provide "Telephone Exchange Service," as that phrase is defined in Section 3(r) of the

Communications Act of 1934, 47 U.S.C. 153(r).

Cost Companies. Companies that receive interstate settlements on the basis of their actual reported costs must complete all portions of the data request.

Average Schedule Companies. Companies that receive interstate settlements on an average schedule basis (See 47 CFR 69.606) must complete designated portions of file number one (DATAREQ) and all of file number three (ZIPCODES). In the DATAREQ file, average schedule companies must complete information requests found on line numbers that are underlined. In addition, average schedule companies are encouraged to supply information requested in other portions of the DATAREQ file and in file numbers two and four (USF4301 and OPCODATA).

Questions. Any questions regarding the data request or problems in completing it should be communicated to Deborah A. Dupont (202–418–0873) or to Gary Seigel (202–418–0879).

Public Reporting Burden. Public reporting burden for this collection of information is estimated to average 60 hours per response, including the time for reviewing, searching existing data sources, gathering and maintaining the data needed, and completing and reviewing the collection of information. Send comments regarding this burden estimate or any other aspect of this collection of information, including suggestions for reducing the burden, to the Federal Communications Commission, Records Management Division, Room 234, Paperwork Reduction Project (3060–), Washington, D.C. 20554, and to the Office of Management and Budget, Paperwork Reduction Project (3060–), Washington, D.C. 20503.

Due Date: Responses must be returned in time to be received by all of the designated recipients (*see* "Returning Responses," below) on or before January 2, 1995.

Returning Responses. An original and four paper copies of each response and one copy of each 3.5" computer diskette should be filed in CC Docket No. 80–286, with the Office of the Secretary, Federal Communications Commission, 1919 M Street, N.W., Washington, D.C. 20554. One paper copy and one copy of each 3.5" computer diskette also should be transmitted to the Commission's copy contractor, International Transcription Services, Room 640, 1990 M Street , N.W., Washington, D.C. 20036. Finally, two paper copies and two copies of each 3.5" computer diskette should be transmitted to the Accounting and Audits Division, Common Carrier Bureau, Federal Communications Commission, 2000 L Street, N.W., Room 812, Washington, D.C. 20036, Attention: Deborah Dupont and Gary Seigel.

BILLING CODE 6712–01–M

UNIVERSAL SERVICE FUND DATA COLLECTION (File 1 of 4, filename is "DATAREQ".)

Approved by OMB
3060-

Public reporting burden for this collection of information is estimated to average 60 hours per response, including the time for reviewing instructions, searching existing data sources, gathering and maintaining the data needed, and completing and reviewing the collection of information. Send comments regarding this burden estimate or any other aspect of this collection of information, including suggestions for reducing the burden, to the Federal Communications Commission, Records Management Division, Room 234, Paperwork Reduction Project (3060-), Washington, D.C. 20554 and to the Office of Management and Budget, Paperwork Reduction Project (3060-), Washington, D.C. 20503.

PLEASE READ INSTRUCTIONS!

1. This Lotus 1-2-3 filename is "DATAREQ". Re-save this file under a new file name that consists of your study area's NECA code followed by "CP". For example, the study area assigned NECA code 230000, shall re-save this file as "230000CP" followed by the appropriate file extension (.WK1, .WK3 or .WK4). When completed, all files with their new names shall be returned to the FCC on a 3 1/2 inch diskette labeled with your operating company's name and the NECA study area code(s). Also provide a hard copy of each completed file.
2. A separate "DATAREQ" form (File 1 of 4) must be completed for each study area.
3. Study areas that settle interstate access on an average schedule basis are only required to complete those line numbers on "DATAREQ" that are boldfaced and underlined. Interstate average schedule study areas may complete the other sections of this dta collection voluntarily.
4. Enter data or information only in those cells that are unshaded or outlined.
5. Use year end 1993 data unless otherwise instructed.
6. Do not insert, delete, or move any; rows, columns, or text unless approved by FCC.
7. Enter remarks, if any, on lines 565 to 587 (cell range B591..H613).
8. This data collection must be signed and dated at the bottom. (See line 605.)
9. Round all financial data to the nearest whole dollar unless otherwise indicated

Line#

1 **I. CARRIER IDENTIFICATION, METHOD OF REGULATION, SUBSCRIBER INFORMATION & OTHER SERVICES**
2 **A. EXCHANGE CARRIER IDENTIFICATION.**
3 Study Area Name
4 NECA Study Area Code (six digits)
5 State or Territory of operations (do not abbreviate)
6 COSA Code (applicable to carriers that file ARMIS
7 reports with FCC, see 47 CFR §43.21)
8 NECA Subset (See 47 CFR §69.602)
9 Telephone Operating Company Name
10 Holding Co. Name (Use highest level holding company)
11 Contact Person
12 Contact Person's Telephone Number
13
14 **B. METHOD OF REGULATION.**
15
16 Place an "X" in those cells that best describe the method(s) of regulation most applicable to
17 your study area. Your answer may require more than one "X" for each type of service. (LATA
18 is Local Access and Transport Area)

19	Basic Local Service	IntraLATA State Toll	InterLATA State Toll	Interstate
21 Rate of Return Regulation				
22 Incentive or "Price Cap" Regulation				
23 Rate Regulation				
24 Rate increases require prior approval				
25 Other (see below)				
26 No rate regulation, rate of return 27 regulation or incentive regulation				

28 If you selected "Other", briefly describe below the method of regulation employed:
29
30
31

32 Date of last application for change in local 33 service or state toll rates:	Local Service	IntraLATA State Toll	InterLATA State Toll
34 Month:			
35 Year:			

36
37 Place an "X" in the appropriate cell to indicate whether this study area is currently average schedule or cost
38 for: local service, intraLATA state toll, interLATA state toll, and interstate:

39 40	Local Service	IntraLATA State Toll	InterLATA State Toll	Interstate
41 Cost:				
42 Average Schedule:				

43
44 Current Authorized State rate of return:

45 (Enter as a percentage, e.g.,10.25%)
46 C. SUBSCRIBER INFORMATION
47
48 **Residential-Basic Local Service, Federal and State Subcriber Line Charges and Optional Services.**
49 For customer bills delivered in August 1993 and August 1994, how many residential subscribers within this study area had actual total bills per
50 telephone line for local service including local usage charges, local mileage charges, taxes, Federal and State subscriber line charges, other
51 mandatory surcharges and optional services such as touch tone, call waiting, call forwarding, etc., but excluding carry over from prior month,
52 connection, special construction, and deposits that were:
53

	August 1993	August 1994
54 Less than $4.00		
55 Greater than or equal to $4.00, but less than $6.00		
56 Greater than or equal to $6.00, but less than $8.00		
57 Greater than or equal to $8.00, but less than $10.00		
58 Greater than or equal to $10.00, but less than $12.00		
59 Greater than or equal to $12.00, but less than $14.00		
60 Greater than or equal to $14.00, but less than $16.00		
61 Greater than or equal to $16.00, but less than $18.00		
62 Greater than or equal to $18.00, but less than $20.00		
63 Greater than or equal to $20.00, but less than $22.00		
64 Greater than or equal to $22.00, but less than $24.00		
65 Greater than or equal to $24.00, but less than $26.00		
66 Greater than or equal to $26.00, but less than $28.00		
67 Greater than or equal to $28.00, but less than $30.00		
68 Greater than or equal to $30.00, but less than $33.00		
69 Greater than or equal to $33.00, but less than $36.00		
70 Greater than or equal to $36.00, but less than $39.00		
71 Greater than or equal to $39.00, but less than $42.00		
72 Greater than or equal to $42.00, but less than $45.00		
73 Greater than or equal to $45.00, but less than $48.00		
74 Greater than or equal to $48		

75
76 Do more than 25% of your residential customers for this study area have
77 monthly bills for local service, Federal and State subscriber line charges,
78 taxes, optional services, etc., that are less than $16.00? (Yes or No) [ ]
79
80 If you answered "Yes" to the above question, attach to this data collection your company's current local tariff or rate sheets showing
81 local rates and calling scopes for this study area. Calling scope is the number of access lines within a toll-free local calling zone
82
83 **Residential-Toll**
84 Does study area provide billing and collecting services for one or more
85 interexchange carriers? (Yes or No) [ ]
86
87 If you answered "yes" to the above question provide the number of residential subscriber lines that you bill for toll services
88 on behalf of the interexchange carriers: [ ]
89
90 For customer bills delivered in August 1993 and August 1994, how many residential subscribers within
91 this study area had bills per telephone line for toll service (including taxes on toll charges, but excluding carry
92 over from prior month) that were:
93

	August 1993	August 1994
94 Less than $5.00		
95 Greater than or equal to $5.00, but less than $10.00		
96 Greater than or equal to $10.00, but less than $15.00		
97 Greater than or equal to $15.00, but less than $20.00		
98 Greater than or equal to $20.00, but less than $25.00		
99 Greater than or equal to $25.00, but less than $30.00		
100 Greater than or equal to $30.00, but less than $35.00		
101 Greater than or equal to $35.00, but less than $40.00		
102 Greater than or equal to $40.00, but less than $45.00		
103 Greater than or equal to $45.00, but less than $50.00		
104 Greater than or equal to $50.00, but less than $75.00		
105 Greater than or equal to $75.00, but less than $100.00		
106 Greater than or equal to $100.00, but less than $200.00		
107 Greater than or equal to $200.00, but less than $500.00		
108 Greater than or equal to $500.00.		

109
110
111

	1989	1990	1991	1992	1993
112 Number of residential housing units served at year end:					

113 (Housing units include single family houses, townhouses, apartment units, condominiums, etc.)
114

	August 1993	August 1994
115 Total number of residential subscriber lines, including 116 additional subscriber lines for same housing unit:		

117 Total number of business (including government and

	August 1993	August 1994
118 public telephones) subscriber lines including additional 119 subscriber lines for the same business:		

120

	1992	1993
Number of new residential subscriber line connections during year: (Include those residential subscribers that disconnected and then reconnected during the year)		
Number of new business subscriber line connections during year: (Include those business subscribers that disconnected and then reconnected during the year)		
Number of residential subscriber line disconnections during year: (Include those residential subscribers that disconnected and then reconnected during the year)		
Number of residential subscriber line disconnections for non-payment of telephone bill:		
Number of business subscriber line disconnections during year: (Include those business subscribers that disconnected and then reconnected during the year)		
Number of business subscriber line disconnections for non-payment of telephone bill:		

If residential subscribers pay their basic local service bill, but fail to pay for toll calls, enhanced services or for calls to "900" or" 976" numbers do you offer continued basic local service with the other services blocked? (Yes or No) [ ]

If you answered "yes" to the above question, has this policy been instituted during the last five years? (Yes or No) [ ]

If you answered "yes" to the above question, enter the year this policy was instituted: [ ]

If residential subscribers fail to pay for local or toll service, do you offer all services blocked except for emergency "911" calls? (Yes or No) [ ]

If you answered "yes" to the above question, has this policy been instituted during the last five years? (Yes or No) [ ]

If you answered "yes" to the above question, enter the year this policy was instituted: [ ]

What was the average installation and connection charge for new residential subscriber lines for the months of August 1993 and August 1994? Calculate by dividing residential installation and connection charges for the month by total residential lines installed. Include the charges for service order processing, central office work to connect the line and any separate charge for installing a drop line a connection block. Exclude inside wiring and special construction charges.

	August 1993	August 1994

Residential Billings (including billings for Interexchange Carrier Services)

	August 1993	August 1994
Local service billed revenues:		
Federal Subscriber Line Charge billed revenues:		
State Subscriber Line Charge billed revenues:		
Intrastate billed toll revenues:.		
Interstate billed toll revenues:		
Other billed revenues:		
Total billed revenues:		

Telephone Cooperatives

If this response is being completed for a cooperative telephone company, did that company pay dividends either to its subscribers or members during either of these years? (Answer Yes or No).

	1992	1993

If the answer to the preceding question was "yes," complete the following:

	1992	1993
Average annual dividend paid to each subscriber:		
Average equity per subscriber at year end (Assets minus liabilities divided by number of subscribers):		
Average annual dividend paid to each member:		
Average equity per member at year end (Assets minus liabilities divided by number of members):		
Total number of members at year end:		

197 **Lifeline**
198 Number of subscribers paying reduced
199 Federal Subscriber Line Charge or
200 "Lifeline" Rate:

1989	1990	1991	1992	1993

201 (See CFR 47 §36.701-741) If your study area has a low priced local service plan called "lifeline" and it has no relationship to the
202 Federal program do not include those subscribers in these counts.
203 Number of subscribers initiating service through FCC
204 approved Lifeline Connection
205 Assistance (Link up America):

1989	1990	1991	1992	1993

206
207 **State or Local Assistance Programs (Do not include the state program that implements the Federal Lifeline program.)**
208 (All responses should include those subscribers that receive assistance from state or local
209 assistance programs either by direct payment to the subscriber or by payment to the exchange carrier.)
210
211 Number of subscribers receiving assistance for monthly local service from
212 state mandated assistance programs:

1989	1990	1991	1992	1993

213
214 Total dollar amount of state mandated assistance programs provided to
215 subscribers for monthly local service:

1989	1990	1991	1992	1993

216
217 Source of funds for state mandated assistance programs for monthly local service
218 (i.e. tax revenues, state toll, etc.):

1989	1990	1991	1992	1993

219
220 Number of subscribers initiating telephone service through state mandated
221 connection assistance programs:

1989	1990	1991	1992	1993

222
223 Total dollar amount from state mandated assistance programs provided to subscribers
224 to initiate telephone service:

1989	1990	1991	1992	1993

225
226 Source of funds for state mandated assistance programs to initiate telephone service
227 (i.e. tax revenues, state toll, etc.):

1989	1990	1991	1992	1993

228
229 **D. OTHER SERVICES**
230
231 Does your telephone company, its holding company or any of its affiliates provide
232 any of the following services to the telephone subscribers of this study area? (Yes or No)
233 **Cable Television:**
234 Cellular Telephone:
235 Interexchange Service:
236 If your company provides other services
237 please indicate type of services here:
238
239
240
241 Are there competitive access service providers operating
242 in your study area? (Yes or No)
243 Are there other intraexchange telephone service providers operating
244 in your study area? (Yes or No)
245
246 If you answered "yes" regarding Cable Television provide the Community Unit Identification Number(s) issued to your company
247 by the FCC's Cable Services Bureau:
248
249 If telephone company or affiliate provides any of the above services to the subscribers in this study area provide the total
250 revenues, expense, gross investment and number of subscribers for 1993.

251	Revenues	Expenses	Gross Invst.	No. of Subscribers
252 Cable Television:				
253 Cellular Telephone:				
254 Interexchange Service:				
255 Other				
256				
257				
258				

259
260 If your telephone company or its affiliates provides cable, cellular, interexchange or other services to the
261 subscribers of this study area, does this study area's telephone operations share facilities, equipment or
262 personnel with these services? (Yes or No)
263 Cable Television:
264 Cellular Telephone:
265 Interexchange Services:
266 Other:
267
268
269
270
271 If this study area's telephone operations share facilities, equipment, or personnel with the above services, answer "yes" or "no" for those items
272 listed below that are shared and list other items that are shared and provide the amount of plant investment and plant specific (i.e., maintenance)

273 expense that is allocated among the telephone operations and other services pursuant to Part 64 of the Commission's rules (47 CFR §64.901) for
274 the year 1993.

	Answer Yes or No for items shared	Telephone Service		Cellular Telephone Service		Cable Television Service	
		Plt. Investment	Plt. Spec. Exp.	Plt. Investment	Plt. Spec. Exp.	Plt. Investment	Plt. Spec. Exp.
Central Ofc. Switching							
Central Ofc.Transmission							
Cable & Wire Facilities							
Other (Briefly describe below):							

II. WORKING LOOPS, PARTY LINES AND ACCESS LINES.

"Loop" is a pair of wires, or its equivalent, between a customer's station and the central office from which the station is served.

A. Number of Total Loops at year end (Exchange Line Cable & Wire Facilities Subcategories 1.1 through 1.3):

1989	1990	1991	1992	1993

(Must agree with counts reported to NECA in the annual USF filing. If necessary, refer to NECA's Universal Service Fund Loop Count Guide for loop count definitions.)

B. Number of Subcategory 1.3 Loops at year end (exclude Subcat. 1.3 Teletypewriter Exchange Loops):

1989	1990	1991	1992	1993

"Subcategory 1.3 Loop" is a subscriber or common loop that is jointly used for local exchange service and exchange access for state and interstate interexchange services. (Must agree with counts reported to NECA in the annual USF filing. If necessary, refer to NECA's Universal Service Fund Loop Count Guide for loop count definitions.)

Enter number of access lines at each year end

	1989	1990	1991	1992	1993
C. Total No. of Access Lines:					

"Access Line" is a communications line extending from a customer's premises to a serving central office comprising a subscriber line and, if necessary, a trunk facility, e.g., a WATS access line, TWX access line.

Enter number of single party lines at each year end

	1989	1990	1991	1992	1993
D. Number of Single Party Lines					

Enter number of party-lines at each year end

E. Number of Party Lines Bridged inside the Central Office (C.O.):	1989	1990	1991	1992	1993
8 or more-Party Lines:					
4-Party Lines:					
2-Party Lines:					
Total Party Lines bridged inside C.O.:					

Enter number of party-lines at each year end

F. Number of Party Lines Bridged outside the Central Office:	1989	1990	1991	1992	1993
8 or more-Party Lines:					
4-Party Lines:					
2-Party Lines:					
Total Party Lines bridged outside C.O.:					

III. SWITCHES

A. Provide a count of all local switching entities categorized by the following size distribution for working loops (Use most recent available data):

Working loops served directly by the local switch:	Number of Local Switches		
	Hosts serving as local switches	Remotes serving as local switches	Total Host/Remote local switches
0 to 100 Loops:			
101 to 500 Loops:			
501 to 1,000 Loops:			
1,001 to 2,000 Loops:			
2,001 to 5,000 Loops:			
5,001 to 10,000 Loops:			
10,001 to 20,000 Loops:			
20,001 to 50,000 Loops:			
Greater than 50,000 Loops:			
Total:			

B. Provide a count of all switches not serving soley as local switches:

Number of Switches

	Hosts	Remotes	Total
Total Number of Tandem Switches:			
Total No. of Local/Tandem Switches:			

C. Remote Central Office Equipment Functionality:

	Remote Central Office Equipment					
	Number of Remote Units	Plant Investment	Plant Investment Assigned to COE Cat 3 Switching	Plant Investment Assigned to COE Cat 4.11 CirEq.	Plant Invstmnt Assgnd to COE Cat 4.13 CirEq.	Plant Invstmnt Assigned to COE Cat 4.3 CirEq.
Remote COE units that provide "intra-nodal switching":*						
Remote COE units that do not provide "Intra-nodal"* switching:						
Totals:						

*"Intranodal switching" occurs when the remote unit provides a switched path for communication between subscribers served by the same remote unit without a voice path (or link) to the central office host unit. A path (or link) to the host unit may be required for initial call set-up, but once established, this path is dropped and the voice path does not extend to the host unit for subscribers served by the same remote unit.

	Remote Central Office Equipment					
	Number of Remote Units	Plant Investment	Plant Investment Assigned to COE Cat 3 Switching	Plant Investme Assgnd to COE Cat 4.11 CirEq.	Plant Invstmnt Assgnd to COE Cat 4.13 CirEq.	Plant Invstmnt Assgnd to COE Cat 4.3 CirEq.
Remote COE units that interface at the central office host through a central office interface:						
Remote COE units that interface at the central office host through a direct digital interface:						
Totals:						

Note: The totals entered for this item and for the "intranodal" question above do not have to be equal.

D. Switch Types

	Electromechanical		Analog Electronic		Digital Electronic	
Year	Number of Switches	No. of Access Lines Served	Number of Switches	No. of Access Lines Served	Number of Switches	No. of Access Lines Served
1989						
1990						
1991						
1992						
1993						

IV. DIAL EQUIPMENT MINUTES (DEM) WEIGHTING AND SEPARATIONS INFORMATION

"DEM" are minutes of holding time of originating and terminating local switching equipment.

Provide the DEM weighting factor [See 47 CFR §36.125(f)] for each of these years:

	1989	1990	1991	1992	1993
Enter 3, 2.5, 2 or 1					

Dial Equipment Minutes (DEM)	1989	1990	1991	1992	1993
Local DEM (including EAS*)(mil[illegible]):					
State DEM (millions):					
Interstate DEM (millions):					
Total DEM (millions):					
Local Extended Area Service DEM (millions)					

*Extended Area Service (EAS) is a local telephone service tariff put into effect as a replacement for short-haul toll tariffs. EAS enlarges the toll-free local calling zone to include exchanges that under pre-EAS tariffs were considered to be long distance calls. If your study area cannot separately count Local Extended Area Service DEM, leave this item blank.

Total COE Cat 3-Switching Equipment	1989	1990	1991	1992	1993
Net Investment					
Gross Investment					

1993 Selected Separations Data (Report in millions)

	Total	State	Interstate
IntraLATA Toll Minutes of Use (MOU)*: (millions)			

*If intraLATA access MOU or intraLATA toll MOU are not mutually exclusive the overlap shall be stated here (millions): [ ]

	Total	State IntraLATA	State InterLATA	Interstate IntraLATA	Interstate InterLATA
Originating Access Toll MOU (millions)					
Terminating Access Toll MOU (millions)					

(47 CFR §69.2(a))

Note: For the below MOU information do not double count the "Local", "State Toll" & "Extended Area Service" minutes in the Total minutes. The Total MOU should include "Total Interstate MOU" plus "Total State MOU".

		Total State MOU			Local Extended

	Total MOU	Total Interstate MOU	(Include Local, StateToll & EAS)	Local MOU	State Toll MOU	Area Service MOU
Tandem Switching Cat. 2 MOU (millions) (47 CFR §36.124(b))						

	Total MOU	Total Interstate MOU	Total State MOU (Include Local, StateToll & EAS)	Local MOU	State Toll MOU	Local Extended Area Service MOU
Wideband and Exchange Trunk C&W Cat. 2 MOU (millions)(47 CFR §36.155)						

	Total MOU	Total Interstate MOU	Total State MOU (Include Local, StateToll & EAS)	Local MOU	State Toll MOU	Local Extended Area Service MOU
Interexchange C&WF Cat. 3 Conversation Minute Kilometers (millions)(47 CFR §36.156)						

	Total MOU	Total Interstate MOU	Total State MOU (Include Local, StateToll & EAS)	Local MOU	State Toll MOU	Local Extended Area Service MOU
Host/Remote message C&WF Cat. 4 (excl. WATS) MOU Kilometers(millions) (47 CFR §36.157)						

V. CABLE AND WIRE FACILITIES & CENTRAL OFFICE TRANSMISSION EQUIPMENT

A. Provide the 1993 Total, Interstate, State, Local, State Toll and Extended Area Service (EAS) plant amounts for each of the following categories (do not double count Local, State Toll and EAS Plant amounts in the total plant amount. Total plant should include Total Interstate Plant plus Total State Plant.

Cable & Wire Facilities	Total Plant	Total Interstate Plant	Total State Plant	Local Plant	State Toll Plant	Local Extended Area Svc. Plant
Cat. 1.1 State Private Lines & WATS						
Cat. 1.2 Interstate Private Lines&WATS						
Cat. 1.3 Jointly Used Subscriber Lines						
Cat. 2 Exchange Trunk						
Cat. 3 Interexchange						
Cat. 4 Host/Remote Msg.						

Central Office Equipment-Switching	Total Plant	Total Interstate Plant	Total State Plant	Local Plant	State Toll Plant	Local Extended Area Svc. Plant
Cat 2. Tandem Switching Equipment						
Cat 3. Local Switching Equipment						

Central Office Equipment-Trans.	Total Plant	Total Interstate Plant	Total State Plant	Local Plant	State Toll Plant	Local Extended Area Svc. Plant
Cat.4.1 Exchange Circuit Equipment						
Cat.4.11 Wideband Exch. Circuit Eq.						
Cat.4.12 Exchange Trunk Circuit Eq.						
Cat.4.13 Exchange Line Circuit Eq.						
Cat.4.3 Host/Rem. Msg. Circuit Eq.						

B. Cable & Wire Facilities-Sheath Kilometers

Provide, as measured by sheath kilometers, the year end amounts of fiber, copper and other cable & wire facilities utilized in loop plant. A sheath kilometer may include multiple lines and circuits. (To change miles to kilometers multiply miles by 1.61 and then round to the nearest whole kilometer.)

	1989	1990	1991	1992	1993
Fiber Loop Plant					
Copper Loop Plant					
Other Loop Plant					

C. Buried Cable & Wire Facilities

If a portion of your cable & wire facilities is not buried due to topography, terrain or other geographical characteristics of the study area such as rock, ledge, or excessive moisture place an X here: [ ]

If you placed an X above, briefly describe the nature of the condition below:

Estimate the percentage not buried due to these conditions: [ ]

If a portion of your cable & wire facilities is buried, but would be aerial if not for government standards requiring burial, place an X here: [ ]

If you placed an X above, briefly describe the nature of the gov. standards below:

Estimate the percentage buried due to these gov. standards: [ ]

VI. DENSITY OF STUDY AREA

Note: To change square miles to square kilometers multiply square miles by 2.592 and then round to the nearest whole number.

Year Ending 1993

501 Square kilometers served by this study area: [ ]
502
503 Note: To change miles to kilometers multiply miles by — Year Ending
504 1.61 and then round to the nearest whole number. — 1993
505 Route kilometers of cable and wire facilities: [ ]
506 Route kilometers are the length of the actual physical distance of the cable or wire
507 upon which messages are routed. Do not provide sheath kilometers or pair kilometers.
508
509 VII. REVENUES, RETURN AND INVESTMENT (REGULATED TELEPHONE SERVICES ONLY)

	Revenues	1989 Total	1989 State	1989 Interstate	1990 Total	1990 State	1990 Interstate
510							
512	Basic local service [Acct 32.5000]:						
513	Network access [Acct 32.5080]:						
514	Long distance msg. [Acct 32.5100]:						
515	Miscellaneous [Acct 32.5200]:						
516	Total Revenues:						
517							
518	Net Return:						

519 "Net Return" is net revenues (revenues minus uncollectible revenues) less allowable operating expenses. See 47 C.F.R. §65.450.

520	Average Net Investment:					

521 "Average Net Investment" is the sum of the monthly net investment during the reporting year divided by 12.

522	Total Rate of Return %:					

523 "Total Rate of Return %" is net return after taxes divided by average net investment. Please enter as % to 1 decimal
524 place, e.g., 8.1%. Please enter as % to 1 decimal place, e.g., 8.1%.

	Revenues	1991 Total	1991 State	1991 Interstate	1992 Total	1992 State	1992 Interstate
525							
527	Basic local service [Acct 32.5000]:						
528	Network access [Acct 32.5080]:						
529	Long distance msg. [Acct 32.5100]:						
530	Miscellaneous [Acct 32.5200]:						
531	Total Revenues:						
532							
533	Net Return:						
534							
535	Average Net Investment:						
536							
537	Total Rate of Return %:						

538 (Please enter as % to 1 decimal place, e.g., 8.1%)
539

	Revenues	1993 Total	1993 State	1993 Interstate
540				
542	Basic local service [Acct 32.5000]:			
543	Network access [Acct 32.5080]:			
544	Long distance msg. [Acct 32.5100]:			
545	Miscellaneous [Acct 32.5200]:			
546	Total Revenues:			
547				
548	Net Return:			
549				
550	Average Net Investment:			
551				
552	Total Rate of Return %:			

553 (Please enter as % to 1 decimal place, e.g., 8.1%)
554

		1989	1990	1991	1992	1993
555	USF Expense Adjustment (actual amt.					
556	received) (See 47 CFR §§36.601-641.):					
557						

558 Lifeline Support Expense Adjustment (See 47 C.F.R. §§ 36.711-741.)

		1989	1990	1991	1992	1993
559	Lifeline Assistance received (End Use					
560	Subscriber Line Charge Waiver):					
561	Lifeline Connection Assistance received					
562	(Link-up America):					
563						

564 Remarks:
565
566
567
568
569
570
571
572
573
574
575
576

577
578
579
580
581
582
583
584
585
586
587
588
589
590 **CERTIFICATION**
591
592 I certify that I have been designated by the Company that owns this study area to attest to the accuracy of the information contained herein and that I have
593 examined the foregoing report and that to the best of my knowledge, information, and belief, all statements of fact contained in this report are true, correct and
594 complete and that said report is an accurate statement of the affairs of the above named respondent in respect to the data and information set forth herein.
595
596 Printed Name
597 Position
598 Signature (Sign on the hard copy you provide.)
599 Date
600 Telephone Number
601
602 (Persons making willful false statements in this report can be punished by fine or imprisonment under the Communications Act, 47 U.S.C. 220(e).).

Universal Service Fund Data Collection (File 2 of 4, filename is "USF4301".)
See File 1 of 4 for Office of Management and Budget's Public Reporting Burden Statement.

Approved by OMB
3060-
Expires / /

PLEASE READ INSTRUCTIONS!

1. Study areas that settle interstate access on an average schedule basis are not required to, but may voluntarily, complete this part (File 2 of 4) of the data collection.
2. This Lotus 1-2-3 filename is "USF4301". Re-save this file under a new file name that consists of your study area's NECA code followed by "AR". For example, the study area assigned NECA code 230000, shall re-save this file as "230000AR" followed by the appropriate file extension (.WK1, .WK3 or .WK4). When completed, all files with their new names shall be returned to the FCC on a 3 1/2 inch diskette labeled with the operating company's name and the NECA study area code(s). Also provide a hard copy of each completed file.
3. A separate "USF4301" form (File 2 of 4) must be completed for each study area.
4. To complete the data requested below please follow the instructions for FCC Report No. 43.01. See Order in the Matter of Automated Reporting Requirements for Certain Class A and Tier 1 Telephone Companies, 5 FCC Rcd 4718 (1990). Please note that the data requested in this worksheet is not at the same level of detail as the FCC Report 43.01, i.e., columns i through l and n through q have been omitted.
5. Do not insert, delete, or move any; rows, columns, or text unless approved by the FCC.
6. Enter data in unshaded or outlined areas only.
7. Enter any remarks in the space provided (cell range B145..P150).
8. This data collection must be signed and dated at the bottom.
9. Use calendar year 1993 data to complete this form.
10. ROUND ALL DATA TO THE NEAREST WHOLE DOLLAR.

Study Area Name	
NECA Study Area Code (six digits)	
State or Territory of operations (do not abbreviate)	
COSA Code (applicable to carriers that file ARMIS reports with FCC, see 47 CFR §43.21)	
NECA Subset (See 47 CFR §69.602)	
Telephone Operating Company Name	
Holding Co. Name (Use highest level holding company)	
Contact Person	
Contact Telephone Number	

Use calendar year 1993 data.

43.01 Row	Part 32 Class B Account(s)	Classification (a)	Total (b)	Non-reg (c)	SNAFA and Intra-co Adjust. (d)	All Other Adjust. (e)	Subject to Separations (f)	State (g)	Interstate (h)	Total Common Line (m)	Total Traffic Sensitive (r)	Special Access (s)	Total Access (m+r+s) (t)	Billing and Collections (u)	IX (v)
		Revenues													
1010	5000	Basic Local Service		N/A						N/A	N/A		0	N/A	N/A
1020	5080	Network Access Services		N/A									0	N/A	
1030	5100	Toll Network Services		N/A									0	N/A	
1040	5200	Miscellaneous											0		
1050	Note 1	Settlements		N/A									0		
1060	5300	Uncollectibles											0		
1090		Net Revenues	0	0	0	0	0	0	0	0	0	0	0	0	0
		Expenses													
1110	Note 2	Equal Access	N/A							N/A		N/A	0	N/A	N/A
1120	6110-6410	Plant Specific											0		
1130	6510-6530	Plant Non-Specific											0		
1140	6610	Customer Operations Marketing											0		
1150	6620	Customer Operations Services											0		
1160	6710-6790	Corporate Operations											0		
1170	6540	Access		N/A									0	N/A	
1180	6560	Depreciation/Amortization											0		
1185	Note 1	FCC Expense Adjustment	N/A	N/A	N/A	N/A	N/A	N/A					0		
1190	Note 2	Total Operating Expenses	0	0	0	0	0	0	0	0	0	0	0	0	0
		Other Operating Items													
1290	7100,7990	Other Operating Income/Losses											0		
		Non-operating Items													
1320	7910	Inc Effect/Jurisdiction Diff.		N/A	N/A				N/A	N/A	N/A	N/A	N/A	N/A	N/A

Universal Service Fund Data Collection (File 2 of 4, filename is "USF4301".)
See File 1 of 4 for Office of Management and Budget's Public Reporting Burden Statement.

Approved by OMB
3060-
Expires / /

PLEASE READ INSTRUCTIONS!

1. Study areas that settle interstate access on an average schedule basis are not required to, but may voluntarily, complete this part (File 2 of 4) of the data collection.
2. This Lotus 1-2-3 filename is "USF4301". Re-save this file under a new file name that consists of your study area's NECA code followed by "AR". For example, the study area assigned NECA code 230000, shall re-save this file as "230000AR" followed by the appropriate file extension (.WK1, .WK3 or .WK4). When completed, all files with their new names shall be returned to the FCC on a 3 1/2 inch diskette labeled with the operating company's name and the NECA study area code(s). Also provide a hard copy of each completed file.
3. A separate "USF4301" form (File 2 of 4) must be completed for each study area.
4. To complete the data requested below please follow the instructions for FCC Report No. 43.01. See Order in the Matter of Automated Reporting Requirements for Certain Class A and Tier 1 Telephone Companies, 5 FCC Rcd 4718 (1990). Please note that the data requested in this worksheet is not at the same level of detail as the FCC Report 43.01, i.e., columns i through l and n through q have been omitted.
5. Do not insert, delete, or move any; rows, columns, or text unless approved by the FCC.
6. Enter data in unshaded or outlined areas only.
7. Enter any remarks in the space provided (cell range B145..P150).
8. This data collection must be signed and dated at the bottom.
9. Use calendar year 1993 data to complete this form.
10. ROUND ALL DATA TO THE NEAREST WHOLE DOLLAR.

Study Area Name	
NECA Study Area Code (six digits)	
State or Territory of operations (do not abbreviate)	
COSA Code (applicable to carriers that file ARMIS reports with FCC, see 47 CFR §43.21)	
NECA Subset (See 47 CFR §69.602)	
Telephone Operating Company Name	
Holding Co. Name (Use highest level holding company)	
Contact Person	
Contact Telephone Number	

Use calendar year 1993 data.

43.01 Row	Part 32 Class B Account(s)	Classification (a)	Total (b)	Non-reg (c)	SNAFA and Intra-co Adjust. (d)	All Other Adjust. (e)	Subject to Separations (f)	State (g)	Interstate (h)	Total Common Line (m)	Total Traffic Sensitive (r)	Special Access (s)	Total Access (m+r+s) (t)	Billing and Collections (u)	IX (v)
1330	7600	Extraordinary Items											0		
1340	Note 1	AFUDC											0		
1350	Note 1	Special Charges											0		
1360	Note 1	All Other Non-operating Items											0		
1370	Note 1	FCC Non-operating Adjustment	N/A	N/A	N/A	N/A	N/A	N/A					0		
1390		Total Non-operating Items	0	0	0	0	0	0	0	0	0	0	0	0	0
		Other Taxes													
1410	Note 1	State and Local Income											0		
1420	Note 1	Other State and Local											0		
1490	Note 1	Total Other Taxes	0	0	0	0	0	0	0	0	0	0	0	0	0
		Federal Income Taxes													
1510	7500(Nt.1)	Fixed Charges											0		
1520	Note 1	IRS Income Adjustment		N/A									0		
1530	Note 1	FCC Taxable Income Adj.	N/A	N/A		N/A	N/A	N/A					0		
1540	Note 2	ITC Amortization											0		
1550	Note 1	FCC ITC Adjustment	N/A	N/A	N/A	N/A	N/A	N/A					0		
1590	Note 2	Net Federal Income Tax											0		
		Plant-in-Service													
1610	Note 2	Equal Access Investment	N/A							N/A		N/A	0	N/A	N/A
1620	2110	Support Plant											0		
1630	2220	Operator Systems Equipment								N/A		N/A	0	N/A	
1640	2210	COE-Switching								N/A			0	N/A	
1650	2230	COE-Transmission											0	N/A	
1660	2410	Cable and Wire Facilities											0	N/A	

Universal Service Fund Data Collection (File 2 of 4, filename is "USF4301".)
See File 1 of 4 for Office of Management and Budget's Public Reporting Burden Statement.

Approved by OMB
3060-
Expires / /

PLEASE READ INSTRUCTIONS!

1. Study areas that settle interstate access on an average schedule basis are not required to, but may voluntarily, complete this part (File 2 of 4) of the data collection.
2. This Lotus 1-2-3 filename is "USF4301". Re-save this file under a new file name that consists of your study area's NECA code followed by "AR". For example, the study area assigned NECA code 230000, shall re-save this file as "230000AR" followed by the appropriate file extension (.WK1, .WK3 or .WK4). When completed, all files with their new names shall be returned to the FCC on a 3 1/2 inch diskette labeled with the operating company's name and the NECA study area code(s). Also provide a hard copy of each completed file.
3. A separate "USF4301" form (File 2 of 4) must be completed for each study area.
4. To complete the data requested below please follow the instructions for FCC Report No. 43.01. See Order in the Matter of Automated Reporting Requirements for Certain Class A and Tier 1 Telephone Companies, 5 FCC Rcd 4718 (1990). Please note that the data requested in this worksheet is not at the same level of detail as the FCC Report 43.01, i.e., columns i through l and n through q have been omitted.
5. Do not insert, delete, or move any; rows, columns, or text unless approved by the FCC.
6. Enter data in unshaded or outlined areas only.
7. Enter any remarks in the space provided (cell range B145..P150).
8. This data collection must be signed and dated at the bottom.
9. Use calendar year 1993 data to complete this form.

10. ROUND ALL DATA TO THE NEAREST WHOLE DOLLAR.

Study Area Name	
NECA Study Area Code (six digits)	
State or Territory of operations (do not abbreviate)	
COSA Code (applicable to carriers that file ARMIS reports with FCC, see 47 CFR §43.21)	
NECA Subset (See 47 CFR §69.602)	
Telephone Operating Company Name	
Holding Co. Name (Use highest level holding company)	
Contact Person	
Contact Telephone Number	

Use calendar year 1993 data.

43.01 Row	Part 32 Class B Account(s)	Classification (a)	Total (b)	Non-reg (c)	SNAFA and Intra-co Adjust. (d)	All Other Adjust. (e)	Subject to Separations (f)	State (g)	Interstate (h)	Total Common Line (m)	Total Traffic Sensitive (r)	Special Access (s)	Total Access (m+r+s) (t)	Billing and Collections (u)	IX (v)
1670	2310	IOT Equipment									N/A		0	N/A	N/A
1680	2680-2690	Amortizable Assets											0		
1690	Note 2	Total Plant	0	0	0	0	0	0	0	0	0	0	0	0	0
		Other Investments													
1705	1500(Nt. 2)	Other Jurisdictional Assets-Net		N/A	N/A					N/A	N/A	N/A	N/A	N/A	N/A
1710	2002	Property Held for Future Use											0		
1720	2003-2004	Plant Under Construction											0		
1730	2005	Plant Acquisition Adjustment			N/A								0		
1740	1402	Investment in Nonaffiliated Cos.											0		
1750	1438-1439	Other Deferred Charges											0		
1760	1220	Inventories											0		
1770	Note 1	Cash Working Capital	N/A	N/A	N/A	N/A	N/A	N/A					0		
1780	Note 1	FCC Investment Adjustment	N/A	N/A	N/A	N/A	N/A	N/A					0		
1790		Total Other Investments	0	0	0	0	0	0	0	0	0	0	0	0	0
		Reserves													
1820	3100-3200	Accumulated Depreciation											0		
1830	3400-3600	Accumulated Amortization											0		
1840	4100,4340	Deferred FIT											0		
1850	4040	Customer Deposits											0		
1870	4360	Other Deferred Credits											0		
1880	4310,4370	All Other Reserve Items		N/A	N/A								0		
1885	Note 1	FCC Reserve Adjustment	N/A	N/A	N/A	N/A	N/A	N/A					0		
1890		Total Reserves	0	0	0	0	0	0	0	0	0	0	0	0	0
		Return Data													

Universal Service Fund Data Collection (File 2 of 4, filename is "USF4301".)
See File 1 of 4 for Office of Management and Budget's Public Reporting Burden Statement.

Approved by OMB
3060-
Expires / /

PLEASE READ INSTRUCTIONS!

1. Study areas that settle interstate access on an average schedule basis are not required to, but may voluntarily, complete this part (File 2 of 4) of the data collection.
2. This Lotus 1-2-3 filename is "USF4301". Re-save this file under a new file name that consists of your study area's NECA code followed by "AR". For example, the study area assigned NECA code 230000, shall re-save this file as "230000AR" followed by the appropriate file extension (.WK1, .WK3 or .WK4). When completed, all files with their new names shall be returned to the FCC on a 3 1/2 inch diskette labeled with the operating company's name and the NECA study area code(s). Also provide a hard copy of each completed file.
3. A separate "USF4301" form (File 2 of 4) must be completed for each study area.
4. To complete the data requested below please follow the instructions for FCC Report No. 43.01. See Order in the Matter of Automated Reporting Requirements for Certain Class A and Tier 1 Telephone Companies, 5 FCC Rcd 4718 (1990). Please note that the data requested in this worksheet is not at the same level of detail as the FCC Report 43.01, i.e., columns i through l and n through q have been omitted.
5. Do not insert, delete, or move any; rows, columns, or text unless approved by the FCC.
6. Enter data in unshaded or outlined areas only.
7. Enter any remarks in the space provided (cell range B145..P150).
8. This data collection must be signed and dated at the bottom.
9. Use calendar year 1993 data to complete this form.
10. ROUND ALL DATA TO THE NEAREST WHOLE DOLLAR.

Study Area Name	
NECA Study Area Code (six digits)	
State or Territory of operations (do not abbreviate)	
COSA Code (applicable to carriers that file ARMIS reports with FCC, see 47 CFR §43.21)	
NECA Subset (See 47 CFR §69.602)	
Telephone Operating Company Name	
Holding Co. Name (Use highest level holding company)	
Contact Person	
Contact Telephone Number	

Use calendar year 1993 data.

43.01 Row	Part 32 Class B Account(s)	Classification (a)	Total (b)	Non-reg (c)	SNAFA and Intra-co Adjust. (d)	All Other Adjust. (e)	Subject to Separations (f)	State (g)	Interstate (h)	Total Common Line (m)	Total Traffic Sensitive (r)	Special Access (s)	Total Access (m+r+s) (t)	Billing and Collections (u)	IX (v)
1910		Average Net Investment	N/A	N/A	N/A	N/A	0	0	0	0	0	0	0	N/A	0
1915		Net Return	N/A	N/A	N/A	N/A	N/A	N/A	0	0	0	0	0	N/A	N/A
1920		Rate of Return	N/A	N/A	N/A	N/A	N/A	N/A	0.00	0.00	0.00	0.00	0.00	N/A	N/A
1925	Note 1	FCC Ordered Refund	N/A	N/A	N/A	N/A	N/A	N/A					0	N/A	N/A
1926	Note 1	Refund Adjusted for Taxes	N/A	N/A	N/A	N/A	N/A	N/A					0	N/A	N/A
1930		Net Return Including FCC Ref.	N/A	N/A	N/A	N/A	N/A	N/A	0	0	0	0	0	N/A	N/A
1935		Rate of Return (including refund)	N/A	N/A	N/A	N/A	N/A	N/A	0.00	0.00	0.00	0.00	0.00	N/A	N/A
		Miscellaneous Data													
1950	Note 1	Lifeline Adjustment	N/A	N/A	N/A	N/A				N/A	N/A	N/A	N/A	N/A	N/A
1960	Note 1	Universal Service Fund	N/A	N/A	N/A	N/A				N/A	N/A	N/A	N/A	N/A	N/A
1970	Note 1	Common Line Supt-Long Term	N/A	N/A	N/A	N/A	N/A	N/A			N/A	N/A	0	N/A	N/A
1980	Note 1	Common Line Supt-Transitional	N/A	N/A	N/A	N/A	N/A	N/A			N/A	N/A	0	N/A	N/A

Note 1: See instructions for FCC Report 43.01.
Note 2: See Sept. 12, 1990 letter from Kenneth P. Moran, Chief, Accounting and Audits Division to Wayne Chiles, Data Reporting Task Force, United States Telephone Association.
Remarks:

Universal Service Fund Data Collection (File 2 of 4, filename is "USF4301".)
See File 1 of 4 for Office of Management and Budget's Public Reporting Burden Statement.

Approved by OMB
3060-
Expires / /

PLEASE READ INSTRUCTIONS!

1. Study areas that settle interstate access on an average schedule basis are not required to, but may voluntarily, complete this part (File 2 of 4) of the data collection.
2. This Lotus 1-2-3 filename is "USF4301". Re-save this file under a new file name that consists of your study area's NECA code followed by "AR". For example, the study area assigned NECA code 230000, shall re-save this file as "230000AR" followed by the appropriate file extension (.WK1, .WK3 or .WK4). When completed, all files with their new names shall be returned to the FCC on a 3 1/2 inch diskette labeled with the operating company's name and the NECA study area code(s). Also provide a hard copy of each completed file.
3. A separate "USF4301" form (File 2 of 4) must be completed for each study area.
4. To complete the data requested below please follow the instructions for FCC Report No. 43.01. See Order in the Matter of Automated Reporting Requirements for Certain Class A and Tier 1 Telephone Companies, 5 FCC Rcd 4718 (1990). Please note that the data requested in this worksheet is not at the same level of detail as the FCC Report 43.01, i.e., columns i through l and n through q have been omitted.
5. Do not insert, delete, or move any; rows, columns, or text unless approved by the FCC.
6. Enter data in unshaded or outlined areas only.
7. Enter any remarks in the space provided (cell range B145..P150).
8. This data collection must be signed and dated at the bottom.
9. Use calendar year 1993 data to complete this form.
10. ROUND ALL DATA TO THE NEAREST WHOLE DOLLAR.

Study Area Name	
NECA Study Area Code (six digits)	
State or Territory of operations (do not abbreviate)	
COSA Code (applicable to carriers that file ARMIS reports with FCC, see 47 CFR §43.21)	
NECA Subset (See 47 CFR §69.602)	
Telephone Operating Company Name	
Holding Co. Name (Use highest level holding company)	
Contact Person	
Contact Telephone Number	

Use calendar year 1993 data.

43.01 Row	Part 32 Class B Account(s)	Classification (a)	Total (b)	Non-reg (c)	SNAFA and Intra-co Adjust. (d)	All Other Adjust. (e)	Subject to Separations (f)	State (g)	Interstate (h)	Total Common Line (m)	Total Traffic Sensitive (r)	Special Access (s)	Total Access (m+r+s) (t)	Billing and Collections (u)	IX (v)

CERTIFICATION

I certify that I have been designated by the Company that owns this study area to attest to the accuracy of the information contained herein and that I have examined the foregoing report and that to the best of my knowledge, information, and belief, all statements of fact contained in this report are true, correct and complete and that said report is an accurate statement of the affairs of the above named respondent in respect to the data and information set forth herein.

Printed Name	
Position	
Signature	
Date	
Telephone Number	

(Persons making willful false statements in this report can be punished by fine or imprisonment under the Communications Act, 47 U.S.C. 220(e).).

ZIPCODES.WK4 10/14/94

UNIVERSAL SERVICE FUND DATA COLLECTION (File 3 of 4, filename is "ZIPCODES".)
See File 1 of 4 for Office of Management and Budget's Public Reporting Burden Statement.

Approved by OMB
3060-
Expires / /

INSTRUCTIONS:

1. All study areas must complete this part (File 3 of 4) of the data collection.
2. This Lotus 1-2-3 filename is "ZIPCODES." Re-save this file under a new file name that consists of your study area's NECA code followed by "WC". For example, the study area assigned NECA code 230000, shall re-save this file as "230000WC" followed by the appropriate file extension (.WK1, .WK3 or .WK4). When completed, all files with their new names shall be returned to the FCC on a 3 1/2 inch diskette labeled with the operating company's name and NECA study area code(s). Also provide a hard copy of each completed file.
3. A separate "ZIPCODES" form (File 3 of 4) must be completed for each study area.
4. Do not insert, delete, or move any; rows, columns, or text unless approved by FCC.
5. Before printing this report, please change the print range to include the last row and column in which you entered information.
6. This data collection must be signed and dated below.

CERTIFICATION

I certify that I have been designated by the Company that owns this study area to attest to the accuracy of the information contained herein and that I hav examined the foregoing report and that to the best of my knowledge, information, and belief, all statements of fact contained in this report are true, correct and complete and that said report is an accurate statement of the affairs of the above named respondent in respect to the data and information set forth herein.

Printed Name	
Position	
Signature	(Sign on the hard copy that you provide)
Date	
Tel. Number	

(Persons making willful false statements in this report can be punished by fine or imprisonment under the Communications Act, 47 U.S.C. 220(e).).

I. EXCHANGE CARRIER IDENTIFICATION.

Study Area Name	
NECA Study Area Code (six digits)	
State or Territory of operations (do not abbreviate)	
COSA Code (applicable to carriers that file ARMIS reports with FCC, see 47 CFR §43.21)	
NECA Subset (See 47 CFR §69.602)	
Telephone Operating Company Name	
Holding Company Name (Use highest level holding company)	
Contact Person	
Contact Telephone Number	

II. WIRE CENTERS AND AREAS OF SERVICE.

1. Beginning in cell A60 and continuing down in column A, enter all Wire Center Common Language Location Identifiers (CLLI) in this study area.
2. Beginning in cell B60 and continuing down in column B, enter the number of access lines served by the wire center indicated on the same row in Column A.
3. Beginning in cell C60 and continuing down in column C, enter the U.S. Post Office Zip Code (five digit Zip Code only) that the Wire Center identified in on the same row in Column A is located.
4. Beginning in cell D60 and continuing to the right enter all U.S. Post Office Zip Codes in which the Wire Center identified on the same row provides telephone service. Enter one Zip Code per cell then move to the right on the same row until all Zip Codes are entered for that Wire Center. Include all partially served zipcodes, if any. Follow this same procedure for each Wire Center listed in Column A.

Column A	Column B	Column C	Column D →
Wire Center Common Language Location Identifier (CLLI)	Number of Access Lines Served by Wire Center	Post Office Zip Code at Location of Wire Center	All Post Office Zip Codes served by the Wire Center (Enter to the right each Zip Code served by wire center)

UNIVERSAL SERVICE FUND DATA COLLECTION (File 4 of 4, filename is "OPCODATA".)
See File 1 of 4 for Office of Management and Budget's Public Reporting Burden Statement.

Approved by OMB
3060-
Expires / /

PLEASE READ INSTRUCTIONS!

1. This form (File 4 of 4) shall be completed at the telephone operating company level. If a holding company owns more than one telephone operating company, a separate form shall be completed for each telephone operating company.
2. Telephone operating companies that own only study areas that settle interstate access on an average schedule basis are not required to, but may voluntarily, complete this form (File 4 of 4).
3. This Lotus 1-2-3 filename is "OPCODATA". Re-save this file under a new file name that consists of your telephone operating company's lowest numbered NECA code followed by "OD". For example, if your operating company's lowest assigned study area NECA code is 230000, you shall re-save this file as "230000OD" followed by the appropriate file extension (.WK1, .WK3 or .WK4). When completed, all files with their new names shall be returned to the FCC on a 3 1/2 inch diskette labeled with the operating company's name and NECA study area code(s). Also provide a hard copy of each completed file.
4. Do not insert, delete, or move any; rows, columns, or text unless approved by the FCC.
5. Enter data in unshaded or outlined areas only.
6. Enter any remarks in the space provided.
7. This data collection must be signed and dated at the bottom.
8. ROUND ALL DATA TO THE NEAREST WHOLE DOLLAR EXCEPT FOR PERCENTAGES.

Line#

1 I. IDENTIFICATION
2 Telephone Operating Company Name
3 COSA Code (applicable to carriers that file
4 ARMIS reports with FCC, see 47 CFR §43.21)
5 Holding Company Name (Use highest level holding co.)
6 Contact Person
7 Contact Telephone Number
8
9 II. STUDY AREAS
10 List all study areas operated by this company by name, the six digit study area NECA code, COSA Code (applicable to carriers that file ARMIS
11 reports), and the state of operation (if you need more space create a second Lotus 1-2-3 file (with a different filename), enter the additional study
12 areas and duplicate the information in sections I., III., and IV.)

	Study Area Name	NECA Code (six digits)	COSA Code (if applicable)	State of Operation (do not abbreviate)
13				
14				
15				
16				
17				
18				
19				
20				
21				
22				
23				
24				
25				
26				
27				
28				
29				
30				
31				
32				
33				
34				
35				
36				
37				
38				
39				
40				
41				
42				
43				
44				

45
46 III. FINANCIAL DATA
47 Cash and Retained Earnings

		1989	1990	1991	1992	1993
48	Cash and Cash Equivilents (year end)					
49	Acct. 32.1120 (See 47 CFR §32.1120)					
50						
51	Retained Earnings (year end)	1989	1990	1991	1992	1993
52	Acct. 32.4550 (See 47 CFR §32.4550)					

53
54 **Capital Structure (Percent Equity Capital plus Percent Debt Capital must total 100%).**
55

	1989	1990	1991	1992	1993
56 Percent Equity Capital:					

57 "Equity Capital" are funds provided by the firm's owners that do not mature at some future date. Sources of "Equity Capital" include preferred
58 stock, common stock, and retained earnings. Total Assets minus Total Liabilities equals Equity Capital. Percent equity capital is equity capital
59 divided by total capital.
60

	1989	1990	1991	1992	1993
61 Percent Debt Capital:					

62 "Debt Capital" are short or long term borrowings that are expected to be paid back at some future date. Excluded from debt capital are those
63 sources of financing that are not investor supplied or otherwise subtracted from a carrier's ratebase. Specifically excluded are: accounts
64 payable, accrued taxes, accrued interest, dividends payable, deferred credits and operating reserves, deferred taxes and deferred tax
65 credits. See 47 C.F.R. §65.300(a). Percent debt capital is debt capital divided by total capital.
66
67

	1989	1990	1991	1992	1993
68 Embedded Cost of Debt %:					

69 (Please enter as % to 1 decimal place, e.g., 8.1%)
70 "Embedded Cost of Debt" is annual interest paid or payable plus amoritizations of discounts given or premiums received divided by the
71 average amount of outstanding debt. Please enter as % to 1 decimal place, e.g.,8.1%.
72

	1989	1990	1991	1992	1993
73 Earned Return on Equity %:					

74 "Earned Return on Equity %" is net return after taxes divided by the average stockholders' equity. Please enter as % to 1
75 decimal place, e.g., 8.1%.
76

	1989	1990	1991	1992	1993
77 Total Rate of Return %:					

78 "Total Rate of Return %" is net return after taxes divided by average net investment. Please enter as % to 1 decimal place, e.g., 8.1%.

	1989	1990	1991	1992	1993
79 Regulated Operations Rate of 80 Return %					

81 "Regulated Operations Rate of Return %" is regulated operations net return after taxes divided by the regulated operations average net
82 investment. Please enter as % to 1 decimal place, e.g., 8.1%.
83
84 **IV. AFFILIATED TELEPHONE OPERATING COMPANIES**
85 List all affiliated telephone operating companies by
86 name. Affiliated companies are those companies that
87 directly or indirectly through one or more intemediaries,
88 control or are controlled by, or are under common control
89 with the telephone operating company referred in section
90 section I. IDENTIFICATION, Line #2.
91 (If you need more space, create a second Lotus 1-2-3 file
92 (with a different filename), enter the additional telephone
93 operating companies and dupicate the information in
94 sections I., II. and III.)
95
96
97
98
99
100
101
102
103
104
105 Remarks:
106
107
108
109
110
111
112
113
114
115
116
117
118
119
120

121
122 CERTIFICATION
123
124 I certify that I have been designated by the Company that owns this study area to attest to the accuracy of the information contained herein and
125 that I have examined the foregoing report and that to the best of my knowledge, information, and belief, all statements of fact contained in this
126 report are true, correct and complete and that said report is an accurate statement of the affairs of the above named respondent in respect to the
127 data and information set forth herein.

128	Printed Name	
129	Position	
130	Signature	(Sign on the hard copy you provide.)
131	Date	
132	Telephone Number	

133
134 (Persons making willful false statements in this report can be punished by fine or imprisonment under the Communications Act, 47 U.S.C. 220(e)

[FR Doc. 94–26226 Filed 10–20–94; 8:45 am]
BILLING CODE 6712–01–M

FEDERAL MARITIME COMMISSION

Agreement(s) Filed; The American West African Freight Conference, et al.

The Federal Maritime Commission hereby gives notice of the filing of the following agreement(s) pursuant to section 5 of the Shipping Act of 1984.

Interested parties may inspect and obtain a copy of each agreement at the Washington, D.C. Office of the Federal Maritime Commission, 800 North Capitol Street, N.W., 9th Floor. Interested parties may submit comments on each agreement to the Secretary, Federal Maritime Commission, Washington, D.C. 20573, within 10 days after the date of the Federal Register in which this notice appears. The requirements for comments are found in §572.603 of Title 46 of the Code of Federal Regulations. Interested persons should consult this section before communicating with the Commission regarding a pending agreement.

Agreement No.: 202–007680–086.

Title: The American West African Freight Conference.

Parties:

Joint Service of Societe Navale ET Commerciale Delmas-Vieljeix and America-Africa-Europe Line GMBH D/B/A Delmas AAEL, Inc.
Farrell Lines, Inc.
Maersk Line
Societe Ivoirienne De Transport Maritime, SITRAM
Torm West Africa Line
Westwind Africa Line
Wilhelmsen Lines A/S

Synopsis: The proposed amendment modifies Article 7.2 to delete reference to admission fee requirement.

Agreement No.: 202–011456–002.

Title: The South Europe American Conference Agreement.

Parties:

Evergreen Marine Corporation (Taiwan) Ltd.
"Italia" di Navigazione, S.P.A.
Lykes Lines (Lykes Bros. Steamship Co., Ltd.)
A.P. Moller Maersk Line
Nedlloyd Lines (Nedlloyd Lijnen B.V.)
P&O Containers Limited
Sea-Land Service, Inc.
Zim Israel Navigation Company, Ltd.

Synopsis: The proposed amendment modifies Article 13.1 to permit the Agreement members to take independent action on rate or service items that are exempted from the tariff filing requirements of section 8 of the Shipping Act of 1984. The amendment also amends Article 17.1 to reduce the amount of the financial guarantee that is payable upon admission to the Conference.

Dated: October 17, 1994.

By Order of the Federal Maritime Commission.

Joseph C. Polking,

Secretary.

[FR Doc. 94–26103 Filed 10–20–94; 8:45 am]

BILLING CODE 6730–01–M

DEPARTMENT OF HEALTH AND HUMAN SERVICES

Administration for Children and Families

Notice of Solicitation of Nominations for Membership on the U.S. Advisory Board on Child Abuse and Neglect

In notice document 94–23143, beginning on page 47877 in the issue of Monday, September 19, 1994, make the following correction:

1. In the first column on page 47878, in the sixth paragraph, on the fifth and sixth lines, the postmarked date "October 31, 1994" should read "November 30, 1994."

Dated: October 17, 1994.

Preston Bruce,

Executive Director, U.S. Advisory Board on Child Abuse and Neglect.

[FR Doc. 94–26118 Filed 10–20–94; 8:45 am]

BILLING CODE 4184–01–M

Agency for Health Care Policy and Research

Public Meeting on the Development of Smoking Prevention and Cessation; Clinical Practice Guideline

The Agency for Health Care Policy and Research (AHCPR) and the Centers for Disease Control and Prevention (CDC) announce that a public meeting will be held to receive comments and information pertaining to the development of the clinical practice guideline on Smoking Prevention and Cessation. The guideline will focus on the intervention therapies used for nicotine dependence treatment and the evidence of their effectiveness. The guideline is being developed by a private-sector panel of health care experts and consumers. The panel is supported by AHCPR.

A notice announcing that AHCPR was arranging for the development of this clinical practice guideline was published in the Federal Register on December 15, 1992 (Vol. 57, No. 241). That notice invited nominations for experts and consumers to serve on the panel that is developing the guideline.

A public meeting to provide an opportunity for interested parties to contribute relevant information and comments, including research in areas relevant to the guideline, will be held as follows:

Meeting: Smoking Prevention and Cessation.

Date: November 9, 1994.

From: 9:00 a.m.–12:00 p.m.

Location: Bethesda Marriott Hotel, Grand Ballroom, 5151 Pooks Hill Road; Bethesda, MD 20814.

Phone: (301) 897–9400.

Background

The AHCPR is charged, under Title IX of the Public Health Service Act, with enhancing the quality, appropriateness, and effectiveness of health care services, and access to such services. The AHCPR accomplishes its goals through the establishment of a broad base of scientific research, and through the promotion of improvements in clinical practice and in the organization, financing, and delivery of health care services. (See 42 U.S.C. 299–299c–6 and 1320–12.)

In keeping with its legislative mandates, AHCPR arranges for the development, periodic review, and update of clinically relevant guidelines that may be used by physicians, nurses, other health care providers, educators, and consumers to assist in determining how diseases, disorders, and other health care conditions can most effectively and appropriately be prevented, diagnosed, treated, and clinically managed. Medical review criteria, standards of quality, and performance measures are then developed based on the guidelines produced.

Section 912 of the Act (42 U.S.C. 299b–1(b)), as amended, requires that the guidelines:

1. Be based on the best available research and professional judgment;

2. Be presented in formats appropriate for use by physicians, nurses, other health care providers, medical educators, medical review organizations, and consumers;

3. Be presented in treatment-specific or condition-specific forms appropriate for use in clinical practice, education programs, and reviewing quality and appropriateness of medical care;

4. Include information on the risks and benefits of alternative strategies for prevention, diagnosis, treatment, and management of the particular health condition(s); and

5. Include information on the costs of alternative stratégies for prevention, diagnosis, treatment, and management of the particular health condition(s).

where cost information is available and reliable.

Section 914 of the Act (42 U.S.C. 299b–3(a)), as amended, identifies factors to be considered in establishing priorities for guidelines, including the extent to which the guidelines would:

1. Improve methods for disease prevention;
2. Improve methods of diagnosis, treatment, and clinical management, and thereby benefit a significant number of individuals;
3. Reduce clinically significant variations among clinicians in the particular services and procedures utilized in making diagnoses and providing treatment; and
4. Reduce clinically significant variations in the outcomes of health care services and procedures.

Also, in accordance with Title IX of the PHS Act and section 1142 of the Social Security Act, the AHCPR Administrator is to assure that the needs and priorities of the Medicare program are reflected appropriately in the agenda and priorities for development of guidelines and guideline updates.

Arrangements for the November 9, 1994 Public Meeting on Smoking Prevention and Cessation

Representatives of organizations and other individuals are invited to provide relevant written comments and information, and make a brief (5 minutes or less) oral statement to the panel. Individuals and representatives who would like to attend must register with Cheryl Campbell, Panel Manager, Technical Resources, Inc., (TRI), at the address set out below by October 26, 1994, and indicate whether they plan to make an oral statement. A written copy of the oral statement, comments, and information should be submitted to TRI by October 26, 1994. If more requests to make oral statements are received than can be accommodated between 9:00 a.m. and 12:00 p.m. on November 9, 1994, the chairperson will allocate speaking time in a manner which ensures, to the extent possible, that a range of views of health care professionals, consumers, product manufacturers, and pharmaceutical manufacturers are presented. Those who cannot be granted their requested speaking time because of time constraints are assured that their written comments will be considered when making a decision regarding the development of the guideline.

If sign language interpretation or other reasonable accommodation for a disability is needed, please contact Technical Resources, Inc. by October 26, 1994, at the address below.

Registration should be made with, and written materials submitted to: Ms. Cheryl Campbell, Panel Manager, Technical Resources, Inc., 3202 Tower Oaks Boulevard, Rockville, Maryland 20852, Phone: (301) 231–5250, Fax: (301) 231–6377.

For Additional Information

Additional information on the guideline development process is contained in the AHCPR Program Note, "Clinical Practice Guideline Development," dated August 1993. This document describes AHCPR's activities with respect to clinical practice guidelines including the process and criteria for selecting panels. This document may be obtained from the AHCPR Publications Clearinghouse, P.O. Box 8547, Silver Spring, MD 20907; or call Toll-Free: 1–800–358–9295.

Also, information can be obtained by contacting Douglas B. Kamerow, M.D., M.P.H. Director, Office of the Forum for Quality and Effectiveness in Health Care, Agency for Health Care Policy and Research, Willco Building, 6000 Executive Boulevard, Suite 310, Rockville, MD 20852, Phone 301–594–4015, Fax: 301–594–4027.

Dated: October 17, 1994.

Clifton R. Gaus,

Administrator.

[FR Doc. 94–26120 Filed 10–20–94; 8:45 am]

BILLING CODE 4160–90–P

Agency for Toxic Substances and Disease Registry

[ATSDR–88]

Availability of Draft Toxicological Profiles

AGENCY: Agency for Toxic Substances and Disease Registry (ATSDR), Public Health Service (PHS), Department of Health and Human Services (HHS).

ACTION: Notice of availability.

SUMMARY: The Comprehensive Environmental Response, Compensation, and Liability Act of 1980 (CERCLA), as amended by the Superfund Amendments and Reauthorization Act of 1986 (SARA) [42 U.S.C. 9604(i)(3)] directs the Administrator of ATSDR to prepare toxicological profiles of priority hazardous substances and to revise and republish each toxicological profile as necessary. This notice announces the availability of 8 updated drafts and 2 new draft toxicological profiles prepared by ATSDR for review and comment.

DATES: To ensure consideration, comments on these draft toxicological profiles must be received on or before February 21, 1995. Comments received after the close of the public comment period will be considered at the discretion of ATSDR based upon what is deemed to be in the best interest of the general public.

ADDRESSES: Requests for copies of the draft toxicological profiles or comments regarding the draft toxicological profiles should be sent to the attention of Ms. Kim Fears, Division of Toxicology, Agency for Toxic Substances and Disease Registry, Mailstop E–29, 1600 Clifton Road, NE., Atlanta, Georgia 30333.

Requests for the draft toxicological profiles must be in writing. Please specify the profiled hazardous substance(s) you wish to receive. ATSDR reserves the right to provide only one copy of each profile requested, free of charge. In case of extended distribution delays, requestors will be notified.

Written comments and other data submitted in response to this notice and the draft toxicological profiles should bear the docket control number ATSDR–88. Send one copy of all comments and three copies of all supporting documents to the Division of Toxicology at the above address by the end of the comment period. All written comments and draft profiles will be available for public inspection at the ATSDR, Building 4, Executive Park Drive, Atlanta, Georgia (not a mailing address), from 8:00 a.m. until 4:30 p.m., Monday through Friday, except for legal holidays.

Because all public comments regarding ATSDR toxicological profiles are available for public inspection, no confidential business information should be submitted in response to this notice.

FOR FURTHER INFORMATION CONTACT: Ms. Kim Fears, Division of Toxicology, Agency for Toxic Substances and Disease Registry, Mailstop E–29, 1600 Clifton Road, NE., Atlanta, Georgia 30333, telephone (404) 639–6304.

SUPPLEMENTARY INFORMATION: The Superfund Amendments and Reauthorization Act (SARA) (Pub. L. 99–499) amends the Comprehensive Environmental Response, Compensation, and Liability Act (CERCLA or Superfund) (42 U.S.C. 9601 et seq.) by establishing certain responsibilities for the ATSDR and the Environmental Protection Agency (EPA) with regard to hazardous substances which are most commonly found at facilities on the CERCLA National

Priorities List (NPL). Among these statutory provisions is that the Administrator of ATSDR prepare toxicological profiles for substances included on the priority lists of hazardous substances. These lists identified the 275 hazardous substances which both Agencies determined pose the most significant potential threat to human health. The availability of the revised priority list of 275 hazardous substances was announced in the Federal Register on February 28, 1994 (59 FR 9486). For prior versions of the list of substances see Federal Register notices dated April 17, 1987 (52 FR 12866); October 20, 1988 (53 FR 41280); October 26, 1989 (54 FR 43619); October 17, 1990 (55 FR 42067); October 17, 1991 (56 FR 52166); and October 28, 1992 (57 FR 48801). CERCLA also requires ATSDR to assure the initiation of a research program to fill data needs associated with the substances.

Section 104(i)(3) of CERCLA (42 U.S.C. 9604(i)(3)) outlines the content of these profiles. Each profile is required to include an examination, summary and interpretation of available toxicological information and epidemiologic evaluations. This information and data are to be used to ascertain the levels of significant human exposure for the substance and the associated health effects. The profiles must also include a determination of whether adequate information on the health effects of each substance is available or in the process of development. When adequate information is not available, ATSDR, in cooperation with the National Toxicology Program (NTP), is required to assure the initiation of a program of research designed to determine these health effects.

Although key studies for each of the substances were considered during the profile development process, this Federal Register notice seeks to solicit any additional studies, particularly unpublished data and ongoing studies, which will be evaluated for possible addition to the profiles now or in the future.

The following draft toxicological profiles are expected to be available to the public on or about October 17, 1994.

Document and hazardous substance	CAS No.
1. Carbon Disulfide (UPDATE)	75–15–0
2. Creosote (UPDATE)	8001–58–9
3. Diazinon	333–41–5
4. 1,2-Dichloroethene (trans/cis) (UPDATE)	156–60–5 156–59–2
5. Endrin and Endrin Aldehyde (UPDATE)	72–20–8 53494–70–5
6. Hexachlorobenzene (UPDATE)	118–74–1
7. Methyl T-Butyl Ether	1634–04–4
8. Selenium (UPDATE)	7782–49–2
9. 1,1,2,2-Tetrachloroethane (UPDATE)	79–34–5
10. Toxaphene (UPDATE)	8001–35–2

All profiles issued as "Drafts for Public Comment" represent the agency's best efforts to provide important toxicological information on priority hazardous substances in compliance with the substantive and procedural requirements of Section 104(i)(3) of CERCLA, as amended. As in the past, we are seeking public comments and additional information which may be used to supplement these profiles. ATSDR remains committed to providing a public comment period for these documents as a means to best serve public health and our clients.

Dated: October 17, 1994.

Claire V. Broome,

Deputy Administrator, Agency for Toxic Substances and Disease Registry.

[FR Doc. 94–26136 Filed 10–20–94; 8:45 am]

BILLING CODE 4163–70–P

Health Care Financing Administration

[BPO–124–PN]

Medicare Program; Data, Standards, and Methodology Used to Establish Fiscal Year 1995 Budgets for Fiscal Intermediaries and Carriers

AGENCY: Health Care Financing Administration (HCFA), HHS.

ACTION: Proposed notice.

SUMMARY: This notice describes the data, standards, and methodology that will be used to establish fiscal intermediary and carrier budgets for fiscal year 1995, which begins October 1, 1994. Fiscal intermediaries and carriers are public or private entities that participate in the administration of the Medicare program by performing claims processing and benefit payment functions. This notice is published in accordance with sections 1816(c)(1) and 1842(c)(1) of the Social Security Act, which require us to publish for public comment the data, standards, and methodology we intend to use to establish budgets for Medicare fiscal intermediaries and carriers.

DATES: Comments will be considered if we receive them at the appropriate address, as provided below, no later than 5 p.m. on December 20, 1994.

ADDRESSES: Mail written comments (1 original and 3 copies) to the following address:

Health Care Financing Administration, Department of Health and Human Services, Attention: BPO–124–PN, P.O. Box 26676, Baltimore, Maryland 21207.

If you prefer, you may deliver your comments (1 original and 3 copies) to one of the following addresses:

Room 309–G, Hubert H. Humphrey Building, 200 Independence Avenue, SW., Washington, DC 20201, or

Room 132, East High Rise Building, 6325 Security Boulevard, Baltimore, Maryland 21207.

Because of staffing and resource limitations, we cannot accept comments by facsimile (FAX) transmission. In commenting, please refer to file code BPO–124–PN. Comments received timely will be available for public inspection as they are received, generally beginning approximately 3 weeks after publication of a document, in Room 309–G of the Department's offices at 200 Independence Avenue, SW., Washington, DC, on Monday through Friday of each week from 8:30 a.m. to 5 p.m. (phone: (202)-690–7890).

FOR FURTHER INFORMATION CONTACT: Phyllis Mosmiller, (410) 966–7528

SUPPLEMENTARY INFORMATION:

I. Background

Under sections 1816(a) and 1842(a) of the Social Security Act (the Act), public or private organizations and agencies may participate in the administration of the Medicare program under agreements or contracts entered into with the Secretary. These Medicare contractors are known as fiscal intermediaries (section 1816(a) of the Act) and carriers (section 1842(a) of the Act). Fiscal intermediaries perform bill processing and benefit payment functions for Part A of the program (Hospital Insurance) and carriers perform claim processing and benefit payment functions for Part B of the program (Supplementary Medical Insurance). When bills are submitted by providers, and claims by beneficiaries, physicians, and suppliers of services, fiscal intermediaries and carriers are responsible for:

- Determining the eligibility status of a beneficiary;
- Determining whether the services on the submitted claims or bills are covered under Medicare and, if so, what are the correct payment amounts; and
- Making appropriate payments to the provider, beneficiary, physician, and/or supplier of services.

Fiscal intermediary and carrier performance is monitored by HCFA at

the central office and regional office (RO) levels. In general, issues that affect policies on a national level are addressed by the central office, and issues dealing with regional and local policies, as well as those of an operational nature, are addressed by the ROs. Continuous communication between HCFA and the fiscal intermediaries and carriers is established through consultation workgroups that meet on a regular basis and are comprised of representatives from the central office, ROs, and Medicare contractors.

II. Fiscal Intermediary and Carrier Budget Process

HCFA's central office is responsible for developing a national contractor budget for Parts A and B of the Medicare program. The budget is formulated over an 18-month period, beginning in March of the calendar year preceding the fiscal year (FY) to which it applies. Input from the contractor community, HCFA, the Department of Health and Human Services, and the Office of Management and Budget (OMB) is received and included before submission to the President for approval and forwarding to the Congress. Once the national contractor budget has been approved, HCFA issues Budget and Performance Requirements (BPRs). BPRs specify the level of effort required for contractor functions and serve as the statement of work for contractor use in preparing their individual budgets for submission to HCFA.

The budgets submitted by contractors are reviewed by the ROs during a budget level determination process that is based on current claims processing trends, legislative mandates, administrative initiatives, current year performance standards and criteria, and the availability of funds appropriated by the Congress. We subsequently allocate funding within these constraints.

This notice contains the proposed data, standards, and methodology that we intend to use to establish a national contractor budget for fiscal intermediaries and carriers for FY 1995. As in prior years, we have had, and will continue to seek, extensive input from the involved parties, particularly contractors, when establishing the national contractor budget. The national contractor budget (the FY 1995 President's budget) has already been presented to the Congress. Nevertheless, to the extent that we receive comments during this comment period, which warrant revisions to the data, standards, and methodology we used, we will make the necessary changes before publishing the final notice.

In accordance with Executive Order 12866, this final notice was not reviewed by the Office of Management and Budget.

III. Overview of FY 1995 National Medicare Contractor Budget

A. Data, Standards, and Methodology

The FY 1995 national Medicare contractor budget request was submitted to the Congress in February 1994. The workload for the FY 1995 request is expressed in terms of work processed. For Part A, the FY 1995 estimated workload (129.2 million bills) is 9.2 percent more than the FY 1994 estimate. For Part B, the estimated workload (655.6 million claims) results in a 4.2 percent increase over the FY 1994 estimate.

Our estimates involved the use of a regression model that uses the last 36 months of actual contractor workload data. For the FY 1995 projections, we used November 1993 data, which were the latest available to us at the time. The resulting projections will be updated monthly to assure that the most timely data are available for budgeting purposes.

The FY 1995 unit costs for processing bills and claims were calculated based on the FY 1994 level adjusted for savings achieved due to productivity, Electronic Media Claims, and reduced funding for incremental workload. This calculation resulted in a new unit cost, which, when multiplied by the Part A or Part B workloads, determines the total amount required for bill and claim processing in FY 1995.

Feedback received from contractors and ROs during the past several years has led us to believe that contractors can make major improvements in performance if given the authority to manage their budgets. The FY 1994 BPRs gave the ROs the authority to set a budget and the contractors the authority to manage their budgets on a bottom-line basis. Once funding was issued, each contractor had the flexibility to optimally manage the budget consistent with the statement of work contained in the BPRs. Prior to FY 1993, contractors were not allowed to "shift" more than 5 percent of funds from one line item to another in their budget, as determined by the lesser of the two line items. This restriction was intended to give contractors some latitude with regard to reporting their costs, yet still allow HCFA to maintain control over the national budget. With the exception of the "Payment Safeguards," "Productivity Investments," and "Other" line items, contractors now have total flexibility in the use of funds. There is a 5 percent limitation on the amount of funds that may be shifted out of individual "Payment Safeguards," with unlimited shifting into "Payment Safeguards." Shifting into or out of "Productivity Investments" and "Other" line item funding, not governed by contract modifications, may not exceed 5 percent. Each "Other" line item is treated separately. The "Productivity Investment" line item is treated as a whole and not by a separate project. Funding that is governed by contract modifications may not be shifted to other functions or line items.

B. Medicare Contractor Functional Areas

The Medicare contractor budget consists of functional areas of responsibility that are performed by the fiscal intermediaries for Part A and the carriers for Part B. The eight functional areas of responsibility for fiscal intermediaries under Part A are:

- Bill Payment;
- Reconsideration and Hearing;
- Medicare Secondary Payer;
- Medical Review and Utilization Review;
- Provider Audit (Desk Review, Field Audit, and Provider Settlement);
- Provider Reimbursement;
- Productivity Investments; and
- Benefits Integrity.

The nine functional areas of responsibility for carriers under Part B are:

- Claim Payment;
- Review and Hearing;
- Beneficiary or Physician Inquiry;
- Provider (physician/supplier) Education and Training;
- Medical Review and Utilization Review;
- Medicare Secondary Payer;
- Participating Physicians;
- Productivity Investments; and
- Benefits Integrity.

These functions are funded from the Hospital Insurance and Supplementary Medical Insurance trust funds. The data, standards, and methodology used in these functional areas are discussed in section IV. of this notice. In the following national budget summary, we have combined the discussion of functional areas that are common to fiscal intermediaries and carriers. However, data specific to Part A or Part B are provided under each heading. Workload estimates are provided for all functional areas where the development of the budget is predominantly workload driven. Workload estimates are not provided for functional areas that are not predominantly workload driven, or for which a workload is

uncertain until final negotiations with the Medicare contractors are complete.

1. Bill and Claim Payment (Part A and Part B)

We currently estimate the Part A processed workload to be 129.2 million bills in FY 1995. The Part B processed workload is currently projected at 655.6 million claims and is based on the current funding available.

2. Reconsideration (Review Under Part B) and Hearing (Part A and Part B)

This function includes all activities related to guaranteeing due process of law as a result of contractor action, for example, disallowances on bills and claims. The estimated workload volume is expected to total approximately 10.9 million for FY 1995.

In FY 1995, we expect to maintain efficiencies achieved in prior years through the use of shorter decision letters and the experimental use of the telephone to conduct reviews and reconsiderations.

3. Medicare Secondary Payer (Part A and Part B)

The Medicare Secondary Payer (MSP) function is the first of four initiatives (Medicare Secondary Payer, Medical Review and Utilization Review, Benefits Integrity, and Provider Audit) we developed as "Payment Safeguards" to safeguard the Medicare program against improper payments. The focus of the MSP initiative is to ensure that the Medicare program pays for covered care only to the extent required after payment by the primary insurer.

Medicare contractors are responsible for identifying MSP situations and aggressively pursuing the recovery of improper payments from the appropriate party. The standard for determining the amount of MSP funding a contractor will receive in FY 1995 is based on workload volumes, required systems changes, and any special projects that may be assigned to contractors.

Based on actuarial analysis, we develop specific savings goals for each contractor. The goals are developed on estimates of savings to be achieved by contractors for the MSP categories of working aged, disabled, workers' compensation, end-stage renal disease, and liability or no-fault insurance. After assigning goals to contractors, funds are allocated based on the various MSP activities a contractor must perform such as processing prepayment claims, postpayment claims, inquiries, outreach, and hospital reviews.

In FY 1995, the Initial Enrollment Questionnaire (IEQ) will be operational. The IEQ eliminates the need for first claim development on approximately 85 percent of the new enrollees. This initiative will improve service to beneficiaries on a national basis by providing detailed information on the MSP program at the time a beneficiary enrolls in Medicare.

We have also included funding to process the workloads based on the Internal Revenue Service (IRS)/Social Security Administration (SSA)/HCFA data match project created by section 6202 of the Omnibus Budget Reconciliation Act of 1989 (OBRA '89), Public Law 101–239. The funds are allocated on the basis of the number of report identification numbers a contractor will process.

In addition to the IRS/SSA/HCFA data match, we will continue to pursue other data matches with State Motor Vehicle Administrations, Workers' Compensation, and Medicaid Agencies, and the Departments of Defense, Labor, and Veterans Affairs.

4. Medical Review and Utilization Review (Parts A and B)

In addition to processing and paying claims from providers of services and Medicare beneficiaries, contractors perform medical and utilization reviews of claims to determine whether services are covered under the program and are medically necessary. The distribution of Medicare contractor funding is based on each contractor's proportion of the workload and individual contractor medical review/utilization review projects.

Fiscal intermediaries are responsible for medical and utilization review of home health agencies, skilled nursing facilities, outpatient hospital services (excluding surgery), and other outpatient services such as those provided by rehabilitation facilities, rural health clinics, and similar entities. This review assures that medical care received is necessary and appropriate, and that quality medical services are delivered to Medicare beneficiaries.

Carriers are responsible for medical and utilization review of Part B providers and suppliers. All carriers will utilize data analysis capabilities to target on focused medical review in FY 1995. Through focused medical review, carriers will identify aberrancies from national or local carrier data and further investigate aberrancies to determine which require appropriate corrective actions to eliminate overutilization. These actions will include provider education (individual or group), development and revision of local medical review policies or screens, identification/recoupment of overpayments, and referral of cases to HCFA's Benefit Integrity staff.

Additionally in FY 1995, HCFA will support the Medical Review activities of the four Durable Medical Equipment Regional Carriers (Regional Carriers). The Regional Carriers will conduct prepayment and postpayment review of durable medical equipment, prosthetic, orthotic, and supply claims to identify areas of potential abuse and overutilization and prevent payment for non-covered items and services. Through focused medical review and analysis of data, the Regional Carriers will initiate corrective action for the recoupment of overpayments and the targeting of suppliers with aberrant billing patterns. They will also continue to revise regional medical review policies and screens and make referrals where appropriate to the HHS Office of Inspector General.

5. Provider Audit (Part A Only)

For FY 1995, we have planned a modest increase in the number of onsite reviews/audits for all types of providers to help in the identification and prevention of improper payments. This increase is made possible by reducing the amount of resources needed to perform desk reviews, and by applying these resources to onsite reviews, focused reviews, and field audits. In addition, we will encourage all contractors to retain a knowledgeable audit staff and provide training in accordance with Government Auditing Standards. All contractors are expected to respond to provider appeals and file position papers with the Provider Reimbursement Review Board.

A large percentage of the hospitals paid under the Prospective Payment System (PPS) are expected to appeal their capital cost reimbursement because of adjustments made for the purpose of setting their capital PPS rate. Also, there is an expected increase in the number of appeals to be filed for payments made for graduate medical education based upon per-resident amounts.

6. Provider Payment (Part A Only)

In FY 1995, Medicare contractors are expected to provide payment services to approximately 34,300 health care providers. This represents an increase of approximately 7.5 percent over the number of providers requiring payment services in FY 1994. These payment services include establishing and adjusting interim rates, recouping provider overpayments, and providing consultative services to providers for maintaining and adjusting their accounting systems to ensure accurate

data for preparing claims and cost reports.

We will distribute funds in proportion to workload by provider type.

7. Productivity Investments (Part A and Part B)

The costs of implementing new initiatives that are designed to improve the effectiveness of Medicare program administration are referred to as productivity investments (PIs). PIs generally provide start-up funds for new or revised contractor activities. Once these projects are operational, their funding becomes part of the contractor's ongoing costs. The criteria for selecting PIs to be implemented are varied. For example, some PIs are required by statute or regulation. We also fund projects that will improve administrative cost efficiency, such as Contractor Resource Sharing.

There is no single distribution methodology for the allocation of PI funds. After we determine the national cost of a PI, funds are distributed among the contractors. These funds are based on the contractors' cost estimates or through formulas that we derive, which are based on project specifications. Other PI initiatives require equal effort by all contractors regardless of size and, therefore, funds are distributed equally among contractors. Finally, some PIs, such as the Common Working File and Contractor Resource Sharing, are given only to contractors that are involved in the specific projects.

8. Beneficiary or Physician Inquiry (Part B Only)

The Medicare contractors are the direct link between beneficiaries, providers, physicians, other suppliers, and the Medicare program. It is the responsibility of HCFA and the contractors to provide the most effective and efficient service to beneficiaries, providers, physicians, and other suppliers, and to continue to expand their awareness and understanding of the Medicare program. Funding will continue to be provided to contractors so they may continue to provide toll-free telephone lines for beneficiaries and expand the use of Audio Response Units.

In FY 1995, carriers will receive an estimated 40.4 million inquiries by telephone, in writing, or through direct contact. This is an increase of 3.2 percent over FY 1994.

9. Participating Physicians/Suppliers (Part B Only)

Participating physicians and suppliers are those who agree to accept assignment on all Medicare claims in return for certain incentives or benefits. All physicians must be given an opportunity to enroll or disenroll in the participation program annually.

For FY 1995, the FY 1994 funding was used as the base and was adjusted in proportion to the workload within the limits of the funding available to HCFA.

10. Provider (Physician/Supplier) Education and Training (Part B Only)

The success of the Medicare program depends upon the continuing cooperation of individuals and institutions providing health care services. The funding provided in FY 1995 will allow carriers to perform the activities outlined in the BPRs.

11. Benefit Integrity (Part A and B)

In FY 1995, HCFA will provide funding to continue its efforts in deterring and detecting emerging Medicare fraud and abuse. The carriers will improve the quality of referrals to the Office of Inspector General by expanding data analysis capability. The Medicare fraud focus will include a full range of Medicare fraud detection activities through our fiscal intermediaries and carriers. The fiscal intermediaries will concentrate on home health agencies and skilled nursing facilities and Medicare carriers will focus their detection activities on medical laboratory, radiology, anesthesia, and ambulance claims. Also, in FY 1995, Medicare carriers will standardize the method of how fraud units treat billing and assignment violations.

12. Printing Claim Forms (Part A and Part B)

Although this activity is not among the seven Part A and nine Part B contractor functional areas, it is a part of the national Medicare contractor budget. In the interest of maintaining standard formats and quality of Medicare entitlement and report forms, fiscal intermediaries and carriers supply beneficiary enrollment and provider cost reporting forms. The use of these forms is essential to beneficiary notification, effective and efficient contractor operations, and other program objectives.

C. Contractor Unit Cost Calculations

A key step in the contractor budget process is the development of contractor unit costs for processing Part A bills and Part B claims. These bottom-line unit costs encompass all of the budget's line items except "Provider Audit," "Productivity Investments," "Other," and, in FY 1995, "Provider Reimbursement."

As first implemented in FY 1992, the complexity index (CI) was designed to improve efficiency and reduce contractor-by-contractor cost inequities, and was based on the application of the Industrial Engineering (IE) study commissioned by HCFA. The IE study provided HCFA with an actual weighted unit cost for each claim type; that is, inpatient or outpatient, and method of submission (electronically submitted or hardcopy) of a bill or a claim. After adjustment for changes in program emphasis, these unit costs were applied to each contractor's individual workload mix to develop a weighted unit cost that reflects the complexity of its workload mix. We published an explanation of the CI in our FY 1992 **Federal Register** notice on January 2, 1992 (57 FR 57). Each contractor had a percentage goal in FY 1992 for increasing the submission of claims electronically.

We adjusted the unit costs to reflect achievement of the goals. After adjusting for various savings and increases associated with initiatives, such as the Unique Physician Identifier Number and sections 6111(b), Clinical Diagnostic Laboratory Tests (Annual Monitoring and Certification) and 6204, Physician Ownership of, and Referral to, Health Care Entities (Annual Monitoring Cost) of OBRA '89, we then arrayed the contractors' unit costs and identified the contractor at the 60th percentile. Each contractor with a unit cost higher than the 60th percentile was held to the 60th percentile unit cost, multiplied by the contractor's CI. Each contractor at or below the 60th percentile retained its own unit cost, multiplied by its CI.

We believe that the use of the CI over the last three FYs has enabled us to successfully achieve the goals of improving efficiency in contractor operations and reducing contractor-by-contractor cost inequities. Since we have achieved these goals, and believe that costs can be controlled, we will base each contractor's FY 1995 unit cost on the FY 1994 level, adjusted for savings achieved due to increased productivity, Electronic Media Claims, and reduced funding for incremental workload.

D. Overall Budget Considerations

It should be noted that limitations on the FY 1995 budget could require across-the-board cost cutting measures. In that case, each RO will determine the amount of budget reduction for its contractors.

IV. FY 1995 National Medicare Contractor Budget: Data, Standards, and Methodology

Since the submission of the President's FY 1995 Medicare contractor budget request to the Congress in February 1994, we have been developing BPRs to be issued to the contractors. These requirements outline the statement of work and level of effort that fiscal intermediaries and carriers are expected to perform during the upcoming FY in each of the functional areas for which they are responsible.

The draft BPRs were released to the ROs in May, and the final BPRs scheduled for release in June 1994. Each fiscal intermediary and carrier will have been given its individual requirements to be used in preparing its FY 1995 budget request in June 1994. The ROs will send any additional information that is pertinent to the fiscal intermediaries and carriers within their region. Fiscal intermediaries and carriers are to submit their budget requests to HCFA no later than 6 weeks after the issuance of the BPRs.

After the fiscal intermediaries and carriers review the BPRs, they prepare their budget requests. The central office and RO staff review the fiscal intermediary and carrier budget requests as they are submitted. The RO staff negotiates a final and mutually acceptable budget, within the limits of the funding available to HCFA, with each fiscal intermediary and carrier. The central office prepares a financial operating plan for each RO that provides total regional funding authority for each functional area. The ROs, in turn, prepare a Notice of Budget Approval (NOBA) for each fiscal intermediary and carrier that provides a full year budget plan subject to quarterly cash draw limitations.

A. Standards

The basic statement of work, along with new and special activities that fiscal intermediaries and carriers are expected to perform, is described in the BPR package. Fiscal intermediaries and carriers are expected to perform the work as described in the BPR package and in accordance with the standards included in the Contractor Performance Evaluation Program (CPEP) for FY 1995. For consideration in developing their initial budget requests, a copy of the draft CPEP standards will be sent to contractors. Final FY 1995 CPEP standards are published in the **Federal Register**.

B. Data

The following sources of data that contain various workload volumes, functional costs, and manpower information are used in developing the individual fiscal intermediary and carrier budgets for FY 1995:

- Forms HCFA–1523/1524 (a multipurpose form that serves as the Budget Request, Notice of Budget Approval, and Interim Expenditure Report);
- Forms HCFA–1523A/1524A (Schedule of Productivity Investments and Other);
- Forms HCFA–1523B/1524B (Schedule of Credits, EDP, and Overhead);
- Forms HCFA–1523C/1524C (Schedule of Appeals);
- Forms HCFA–1523D/1524D (Schedule of MSP Costs);
- Forms HCFA–1523E/1524E (Schedule of MR Costs);
- Forms HCFA–1523G/1524G (Schedule of Fraud and Abuse);
- Form HCFA–1525A (Contractor Auditing and Settlement Report (CASR));
- Schedules A, B, & C;
- Provider Reimbursement Profile;
- Schedule of Providers Serviced;
- MSP Savings Report;
- Medical Review/Utilization Review Savings Report;
- Form HCFA–2580 (Cost Classification Report);
- Form HCFA–3529 (Facilities and Occupancy Schedule);
- Forms HCFA–1565/1566 (Carrier Performance Report/Intermediary Monthly Workload Report);
- HCFA Actuary's Workload Estimates;
- OMB's Economic Assumptions of 2.6 Percent;
- Savings from Prior Productivity Investments;
- New Legislation Costs;
- Regional Office Recommendations; and
- Contract Provisions.

C. Methodology

The Medicare contractor budget is organized around the previously listed functional areas that are performed by the fiscal intermediaries for Part A and the carriers for Part B. FY 1992 was the first year in which we developed a bottom-line unit cost for each individual contractor. The following narrative describes the methodology used to calculate individual line-item costs. This methodology will be considered as general reference for contractors as they develop their FY 1995 budgets, and also to provide additional explanation in determining how certain costs and savings were determined.

1. Bill and Claim Payment

The individual fiscal intermediary and carrier workload levels for FY 1995 are determined by using a statistical forecasting model. Using the same data, we are also projecting the number of bills or claims a fiscal intermediary and carrier may expect to have pending at the end of the FY 1994. We then combine the FY 1995 receipt estimate with the anticipated end of FY 1994 pending level, and subtract the estimated FY 1995 pending for each fiscal intermediary and carrier to establish a processed workload; that is, Estimated FY 1995 receipts + Estimated end of FY 1994 pending − Estimated end of FY 1995 pending = Estimated FY 1995 Processed Workload.

In order to price individual contractor bill and claim workload, we develop a unit cost that is the cost of processing a single bill or claim. The individual fiscal intermediary and carrier unit costs for FY 1995 are calculated from the unit costs in the FY 1994 Notices of Budget Approval. The calculations include increases to recognize the cost of new legislation. Savings achieved from operating efficiencies also are part of the formula employed in computing FY 1995 target unit costs. The ROs will negotiate with the fiscal intermediaries and carriers to resolve any differences within the limits of the funding available to HCFA.

2. Reconsideration (Reviews Under Part B) and Hearing

We will allocate funding based on the amount of dollars spent (line 2 of Forms HCFA–1523/1524) in the prior years, adjusted for inflation and changes in volume. Specifically, we will adjust the previous year's costs for reconsiderations and hearings by the estimated percentage change in workload.

The individual fiscal intermediary and carrier budget allocations for reconsiderations, reviews, and hearings are estimated by multiplying forecast workloads by the adjusted unit costs.

The ROs will negotiate with the fiscal intermediaries and carriers to resolve any differences between HCFA's allocations and the contractors' requests within the limits of the funding available to HCFA.

3. Beneficiary and Provider Inquiries (Part B Only)

To establish a budgeted amount for beneficiary and provider inquiries, the prior year's cost is increased by the projected workload change. We also consider special conditions unique to specific carriers in negotiating the

budget. We will use the data to develop a budgeted cost for beneficiary and provider inquiries by multiplying forecasted processed volume times unit cost. The ROs will negotiate with the carriers to resolve any differences between HCFA's allocations and the carriers' requests within the limits of the funding available to HCFA.

4. Provider Reimbursement (Part A Only)

In determining individual fiscal intermediary budgets for reimbursement activities, we first calculated a FY 1993 unit cost by using the funding included on the latest FY 1993 NOBA (Form HCFA 1523) and dividing that amount by the workload reported on the Schedule of Providers Serviced (SPS) for the same period. The SPS is a listing of all the facilities serviced by the fiscal intermediary. The SPS is submitted with each initial budget request so that a part of the analysis is the comparison of the composition of the provider community serviced by the fiscal intermediary and any change reported between fiscal years.

The ROs will negotiate with the fiscal intermediaries to resolve any differences between HCFA's allocations and the fiscal intermediaries' requests within the limits of the funding available to HCFA.

5. Provider Audit (Part A Only)

For FY 1995, the provider audit function is divided into three major activities: field audits, desk reviews, and settlements. The Contractor Auditing and Settlement Report (CASR) (Form HCFA–1525A) provides a breakout of audit activities and costs by type of provider, and documents the savings incurred as a result of audit activity. Using this as a base, the desk review costs are developed by projecting the number of providers serviced by the unit cost per desk review (developed for the latest CASR for FY 1993) to determine the cost of handling the FY 1995 workload at the FY 1993 unit cost.

Settlement costs are based on the workload projected in the fiscal intermediary's budget request, multiplied by the unit cost for settlements found in the most recent CASR for FY 1993.

The first priority of all audit efforts is the completion of any special activities required by legislation. The second priority is that all cost reports be reviewed and, to the extent possible, settled.

The ROs will negotiate with the fiscal intermediaries to resolve any differences between HCFA's allocations and the fiscal intermediaries' requests within the limits of the funding available to HCFA.

6. Medicare Secondary Payer

We will review the estimated workload data, reported backlog data, and any other items, for example, proposed MSP systems enhancements, to determine MSP funding allocations. Each contractor's case mix is analyzed to adjust for specialized workloads such as home health claims or durable medical equipment (DME).

In FY 1995, the budget will be allocated based on the above considerations, adjustments created by shifts in the DME workload from all carriers to the four specialty carriers, and other shifts in workload that may require adjustments.

The ROs will negotiate with the fiscal intermediaries and carriers to resolve any differences between HCFA's allocations and their requests within the limits of the funding available to HCFA.

7. Medical Review/Utilization Review (MR/UR)

The individual fiscal intermediary and carrier MR/UR budgets for FY 1995 will be calculated in three segments: (1) Prepayment medical review, (2) postpayment medical review activities, and (3) data analysis and screen development. The BPR describes the activities and workload requirements that the fiscal intermediaries and carriers are expected to meet. As part of the BPRs, we will ask the fiscal intermediaries and carriers to estimate the required funding to meet their requirements. We will allocate prepayment and postpayment medical review funding to contractors based upon the workload that a fiscal intermediary or carrier projects for FY 1995.

The ROs will negotiate with the fiscal intermediaries and carriers to resolve any differences between HCFA's allocations and the contractors' requests within the limits of the funding available to HCFA.

8. Participating Physicians/Suppliers (Part B Only)

In determining the individual carrier funding levels for the participating physician/supplier program for FY 1995, we considered the following factors:

- The number of physicians/suppliers in the carrier's service area;
- The carrier's current participation rate;
- The carrier's recent performance in increasing its participation rate;
- The statement of work to be performed as outlined in the BPRs; and
- Last year's cost experience.

Since participating physicians/suppliers are eligible for toll-free telephone lines for electronic billing, allowance has been made for these expenses. Carriers with lower participation rates will receive greater funding for the limiting charge violation monitoring. We have discontinued carrier monitoring of the elective surgery disclosure requirement. We now require carriers to investigate beneficiary complaints on a case-by-case basis.

Carrier monitoring funds are allocated based on the national percentage of nonparticipating physicians/suppliers. All carriers will receive the same funding amount for reporting participation statistics.

In FY 1995 the participating physician incentive payment will be discontinued due to the implementation of the Resource-Based Relative Value Scale fee schedules that have contributed largely to the increase in the number of physicians participating in the Medicare program. Non-participation is discouraged by the "limiting charges" imposed under Physician Payment Reform.

The ROs will negotiate with the carriers to resolve any differences between HCFA's allocations and the carriers' requests within the limits of the funding available to HCFA.

9. Productivity Investments (PIs)

The costs of implementing legislation and new initiatives that are designed to improve the effectiveness and efficiency of Medicare program administration are referred to as PIs. Several allocation methodologies will be employed in calculating the PI budgets for individual fiscal intermediaries and carriers. For those projects involving only single contractors or small groups of contractors, we will allocate funds based upon the specifications of the particular project. For those projects involving all fiscal intermediaries or carriers, where the costs are driven by bill or claim volume, we will distribute the funding based upon our workload projections for each contractor. Finally, for those projects involving all fiscal intermediaries or carriers that require equal effort, regardless of the contractor's size, we derived a standard allocation to be given to all contractors.

The ROs will negotiate with the fiscal intermediaries and carriers to resolve any differences between HCFA's allocations and the contractors' requests within the limits of the funding available to HCFA.

10. Provider (Physician/Supplier) Education and Training (Part B Only)

Distribution of funds made available to HCFA for provider (physician/supplier) education and training is based upon the ratio of physicians and suppliers in each carrier's service area to the national total of physicians and suppliers.

11. Benefit Integrity (BI)

In allocating the FY 1995 BI budget to individual fiscal intermediaries and carriers, HCFA will consider:

- The prior year's effectiveness in initiating fraud referrals to the Office of Inspector General;
- Initiating overpayment recoveries when appropriate;
- Prioritizing workload to concentrate on high dollar and multi-state fraud;
- The extracted workload and cost data from the Schedule of Fraud and Abuse (forms HCFA 1523G/1524G);
- The Medicare Fraud Unit Workload Report;
- The fraud unit's level of sophistication to determine BI funding allocations;
- The completion of any special activity required by legislation will be an overriding priority; and
- The networking costs, which will be determined by the personnel cost to support the Medicare Fraud and Abuse Information Coordinator, travel costs, and the other expenses needed to conduct networking for the area assigned.

The ROs will negotiate with the contractors to resolve any differences between HCFA's allocation and the contractors' requests within the limits of the funding available to HCFA.

V. Response to Comments

Because of the large number of items of correspondence we normally receive on documents published for comment, we are not able to acknowledge or respond to them individually. We will consider all comments we receive by the date specified in the "DATES" section of this notice, and, we will respond to the comments in our final notice.

In accordance with Executive Order 12866, this notice was not reviewed by the Office of Management and Budget.

Authority: Sections 1816(c)(1) and 1842(c)(1) of the Social Security Act (42 U.S.C. 1395h(c)(1) and 1395u(c)(1)).

(Catalog of Federal Domestic Assistance Program No. 93.773, Medicare—Hospital Insurance; and Program No. 93.774, Medicare—Supplementary Medical Insurance Program)

Dated: August 16, 1994.

Bruce C. Vladeck,

Administrator, Health Care Financing Administration.

[FR Doc. 94–26161 Filed 10–20–94; 8:45 am]

BILLING CODE 4120–03–P

Food and Drug Administration

[Docket No. 94F–0334]

Morton International, Inc.; Filing of Food Additive Petition

AGENCY: Food and Drug Administration, HHS.

ACTION: Notice.

SUMMARY: The Food and Drug Administration (FDA) is announcing that Morton International, Inc., has filed a petition proposing that the food additive regulations be amended to provide for the safe use of methyltin-2-mercaptoethyloleate sulfide mixtures as heat stabilizers for use in polyvinyl chloride (PVC) pipes intended for transporting water for food contact.

DATES: Written comments on petitioner's environmental assessment by November 21, 1994.

ADDRESSES: Submit written comments to the Dockets Management Branch (HFA–305), Food and Drug Administration, rm. 1–23, 12420 Parklawn Dr., Rockville, MD 20857.

FOR FURTHER INFORMATION CONTACT: Daniel N. Harrison, Center for Food Safety and Applied Nutrition (HFS–216), Food and Drug Administration, 200 C St. SW., Washington, DC 20204–0002, 202–418–3084.

SUPPLEMENTARY INFORMATION: Under the Federal Food, Drug, and Cosmetic Act (sec. 409(b)(5) (21 U.S.C. 348(b)(5))), notice is given that a food additive petition (FAP 4B4430) has been filed by Morton International, Inc., 2000 West St., Cincinnati, OH 45215. The petition proposes that the food additive regulations in § 178.2010 *Antioxidants and/or stabilizers for polymers* (21 CFR 178.2010) be amended to provide for the safe use of methyltin-2-mercaptoethyloleate sulfide mixtures as heat stabilizers for use in PVC pipes intended for transporting water for food contact.

The potential environmental impact of this action is being reviewed. To encourage public participation consistent with regulations promulgated under the National Environmental Policy Act (40 CFR 1501.4(b)), the agency is placing the environmental assessment submitted with the petition that is the subject of this notice on public display at the Dockets Management Branch (address above) for public review and comment. Interested persons may, on or before November 21, 1994, submit to the Dockets Management Branch (address above) written comments. Two copies of any comments are to be submitted, except that individuals may submit one copy. Comments are to be identified with the docket number found in brackets in the heading of this document. Received comments may be seen in the office above between 9 a.m. and 4 p.m., Monday through Friday. FDA will also place on public display any amendments to, or comments on, the petitioner's environmental assessment without further announcement in the **Federal Register**. If, based on its review, the agency finds that an environmental impact statement is not required and this petition results in a regulation, the notice of availability of the agency's finding of no significant impact and the evidence supporting that finding will be published with the regulation in the **Federal Register** in accordance with 21 CFR 25.40(c).

Dated: October 6, 1994.

Alan M. Rulis,

Acting Director, Office of Premarket Approval, Center for Food Safety and Applied Nutrition.

[FR Doc. 94–26076 Filed 10–20–94; 8:45 am]

BILLING CODE 4160–01–F

[Docket No. 94N–0375]

Drug Export; Cerezyme™ (Imiglucerase for Injection) 200 Units/20 mL Vial

AGENCY: Food and Drug Administration, HHS.

ACTION: Notice.

SUMMARY: The Food and Drug Administration (FDA) is announcing that Genzyme Corp. has filed an application requesting approval for the export of the human drug Cerezyme™ (imiglucerase for injection) to Sweden.

ADDRESSES: Relevant information on this application may be directed to the Dockets Management Branch (HFA–305), Food and Drug Administration, rm. 1–23, 12420 Parklawn Dr., Rockville, MD 20857, and to the contact person identified below. Any future inquiries concerning the export of human drugs under the Drug Export Amendments Act of 1986 should also be directed to the contact person.

FOR FURTHER INFORMATION CONTACT: James E. Hamilton, Center for Drug Evaluation and Research (HFD–313), Food and Drug Administration, 5600

Fishers Lane, Rockville, MD 20857, 301–594–2073.

SUPPLEMENTARY INFORMATION: The drug export provisions in section 802 of the Federal Food, Drug, and Cosmetic Act (the act) (21 U.S.C. 382) provide that FDA may approve applications for the export of drugs that are not currently approved in the United States. Section 802(b)(3)(B) of the act sets forth the requirements that must be met in an application for approval. Section 802(b)(3)(C) of the act requires that the agency review the application within 30 days of its filing to determine whether the requirements of section 802(b)(3)(B) have been satisfied. Section 802(b)(3)(A) of the act requires that the agency publish a notice in the **Federal Register** within 10 days of the filing of an application for export to facilitate public participation in its review of the application. To meet this requirement, the agency is providing notice that Genzyme Corp., One Kendall Square, Cambridge, MA 02139–1562, has filed an application requesting approval for the export of the human drug Cerezyme™ (imiglucerase for injection) 200 Units/20 mL Vial to Sweden. Cerezyme™ (imiglucerase for injection) is indicated for long-term enzyme replacement therapy for patients with a confirmed diagnosis of Type 1 Gaucher disease that results in one or more of the following conditions: Anemia, thrombocytopenia, bone disease, hepatomegaly or splenomegaly. The firm has an approved new drug application for Cerezyme™, but the article which is the subject of this announcement is produced by a different manufacturing process.

The application was received and filed in the Center for Drug Evaluation and Research on September 6, 1994, which shall be considered the filing date for purposes of the act.

Interested persons may submit relevant information on the application to the Dockets Management Branch (address above) in two copies (except that individuals may submit single copies) and identified with the docket number found in brackets in the heading of this document. These submissions may be seen in the Dockets Management Branch between 9 a.m. and 4 p.m., Monday through Friday.

The agency encourages any person who submits relevant information on the application to do so by October 31, 1994, and to provide an additional copy of the submission directly to the contact person identified above, to facilitate consideration of the information during the 30-day review period.

This notice is issued under the Federal Food, Drug, and Cosmetic Act (sec. 802 (21 U.S.C. 382)) and under authority delegated to the Commissioner of Food and Drugs (21 CFR 5.10) and redelegated to the Center for Drug Evaluation and Research (21 CFR 5.44).

Dated: September 29, 1994.

David B. Barr,

Deputy Director, Office of Compliance, Center for Drug Evaluation and Research.

[FR Doc. 94–26078 Filed 10–20–94; 8:45 am]

BILLING CODE 4160–01–F

[Docket No. 94N–0373]

Drug Export; Climara® Estradiol Transdermal System 3.9 Milligram (mg) and 7.8 mg Patches

AGENCY: Food and Drug Administration, HHS.

ACTION: Notice.

SUMMARY: The Food and Drug Administration (FDA) is announcing that 3M Pharmaceuticals has filed an application requesting approval for the export of the human drug Climara® estradiol transdermal system 3.9 mg and 7.8 mg patches to New Zealand.

ADDRESSES: Relevant information on this application may be directed to the Dockets Management Branch (HFA–305), Food and Drug Administration, rm. 1–23, 12420 Parklawn Dr., Rockville, MD 20857, and to the contact person identified below. Any future inquiries concerning the export of human drugs under the Drug Export Amendments Act of 1986 should also be directed to the contact person.

FOR FURTHER INFORMATION CONTACT: James E. Hamilton, Center for Drug Evaluation and Research (HFD–313), Food and Drug Administration, 5600 Fishers Lane, Rockville, MD 20857, 301–594–2073.

SUPPLEMENTARY INFORMATION: The drug export provisions in section 802 of the Federal Food, Drug, and Cosmetic Act (the act) (21 U.S.C. 382) provide that FDA may approve applications for the export of drugs that are not currently approved in the United States. Section 802(b)(3)(B) of the act sets forth the requirements that must be met in an application for approval. Section 802(b)(3)(C) of the act requires that the agency review the application within 30 days of its filing to determine whether the requirements of section 802(b)(3)(B) have been satisfied. Section 802(b)(3)(A) of the act requires that the agency publish a notice in the **Federal Register** within 10 days of the filing of an application for export to facilitate public participation in its review of the application. To meet this requirement, the agency is providing notice that 3M Pharmaceuticals, 3M Center, Bldg. 270–3A–01, St. Paul, MN 55144–1000, has filed an application requesting approval for the export of the human drug Climara® estradiol transdermal system 3.9 mg and 7.8 mg patches to New Zealand. Climara® estradiol transdermal system 3.9 mg and 7.8 mg patches is indicated in the treatment of moderate to severe vasomotor symptoms associated with the menopause, treatment of vulval and vaginal atrophy, treatment of hypoestrogenism due to hypogonadism, castration or primary ovarian failure, and treatment of abnormal uterine bleeding due to hormonal imbalance in the absence of organic pathology and only when associated with a hypoplastic endometrium. The application was received and filed in the Center for Drug Evaluation and Research on August 15, 1994, which shall be considered the filing date for purposes of the act.

Interested persons may submit relevant information on the application to the Dockets Management Branch (address above) in two copies (except that individuals may submit single copies) and identified with the docket number found in brackets in the heading of this document. These submissions may be seen in the Dockets Management Branch between 9 a.m. and 4 p.m., Monday through Friday.

The agency encourages any person who submits relevant information on the application to do so by October 31, 1994, and to provide an additional copy of the submission directly to the contact person identified above, to facilitate consideration of the information during the 30-day review period.

This notice is issued under the Federal Food, Drug, and Cosmetic Act (sec. 802 (21 U.S.C. 382)) and under authority delegated to the Commissioner of Food and Drugs (21 CFR 5.10) and redelegated to the Center for Drug Evaluation and Research (21 CFR 5.44).

Dated: September 29, 1994.

David B. Barr,

Deputy Director, Office of Compliance, Center For Drug Evaluation and Research.

[FR Doc. 94–26141 Filed 10–20–94; 8:45 am]

BILLING CODE 4160–01–F

[Docket No. 94N–0374]

Drug Export; Gemzar® (Gemcitabine Hydrochloride) Bulk Drug or Glass Vials: 200 MG or 1 G (Free Base) Per Vial

AGENCY: Food and Drug Administration, HHS.

ACTION: Notice.

SUMMARY: The Food and Drug Administration (FDA) is announcing that Lilly Research Laboratories, A Division of Eli Lilly and Co., has filed an application requesting conditional approval for the export of the human drug Gemzar® (gemcitabine hydrochloride) bulk drug or glass vials: 200 mg or 1 g (free base) per vial to France.

ADDRESSES: Relevant information on this application may be directed to the Dockets Management Branch (HFA-305), Food and Drug Administration, rm. 1-23, 12420 Parklawn Dr., Rockville, MD 20857, and to the contact person identified below. Any future inquiries concerning the export of human drugs under the Drug Export Amendments Act of 1986 should also be directed to the contact person.

FOR FURTHER INFORMATION CONTACT: James E. Hamilton, Center for Drug Evaluation and Research (HFD-313), Food and Drug Administration, 5600 Fishers Lane, Rockville, MD 20857, 301-594-2073.

SUPPLEMENTARY INFORMATION: The drug export provisions in section 802 of the Federal Food, Drug, and Cosmetic Act (the act) (21 U.S.C. 382) provide that FDA may approve applications for the export of drugs that are not currently approved in the United States. Section 802(b)(3)(B) of the act sets forth the requirements that must be met in an application for approval. Section 802(b)(3)(C) of the act requires that the agency review the application within 30 days of its filing to determine whether the requirements of section 802(b)(3)(B) have been satisfied. Section 802(b)(3)(A) of the act requires that the agency publish a notice in the **Federal Register** within 10 days of the filing of an application for export to facilitate public participation in its review of the application. To meet this requirement, the agency is providing notice that Lilly Research Laboratories, A Division of Eli Lilly and Co., Lilly Corporate Center, Indianapolis, IN 46285, has filed an application requesting conditional approval for the export of the human drug Gemzar® (gemcitabine hydrochloride) bulk drug or glass vials: 200 mg or 1 g (free base) per vial to France. Gemzar® is indicated for the treatment of patients with locally advanced or metastatic nonsmall cell lung cancer.

The application was received and filed in the Center for Drug Evaluation and Research on August 18, 1994, which shall be considered the filing date for purposes of the act. Interested persons may submit relevant information on the application to the Dockets Management Branch (address above) in two copies (except that individuals may submit single copies) and identified with the docket number found in brackets in the heading of this document. These submissions may be seen in the Dockets Management Branch between 9 a.m. and 4 p.m., Monday through Friday.

The agency encourages any person who submits relevant information on the application to do so by October 31, 1994, and to provide an additional copy of the submission directly to the contact person identified above, to facilitate consideration of the information during the 30-day review period.

This notice is issued under the Federal Food, Drug, and Cosmetic Act (sec. 802 (21 U.S.C. 382)) and under authority delegated to the Commissioner of Food and Drugs (21 CFR 5.10) and redelegated to the Center for Drug Evaluation and Research (21 CFR 5.44).

Dated: September 29, 1994.

David B. Barr,

Deputy Director, Office of Compliance, Center for Drug Evaluation and Research

[FR Doc. 94-26077 Filed 10-20-94; 8:45 am]

BILLING CODE 4160-01-F

National Institutes of Health

National Heart, Lung, and Blood Institute; Notice of a Closed Meeting

Pursuant to Section 10(d) of the Federal Advisory Committee Act, as amended (5 U.S.C. Appendix 2), notice is hereby given of the following Heart, Lung, and Blood Special Emphasis Panel (SEP) meeting:

Name of SEP: Clinical Investigator Development Awards and the Institutional National Research Service Awards

Date: November 7-8, 1994

Time: 7:30 p.m.

Place: Holiday Inn, Chevy Chase, Maryland

Contact Person: Dr. S. Charles Selden, 5333 Westbard Avenue, Room 552, Bethesda, Maryland 20892, (301) 594-7476

Purpose/Agenda: To review and evaluate grant applications.

The meeting will be closed in accordance with the provisions set forth in sec. 552b(c)(4) and 552b(c)(6), Title 5, U.S.C. Applications and/or proposals and the discussions could reveal confidential trade secrets or commercial property such as patentable material and personal information concerning individuals associated with the applications and/or proposals, the disclosure of which would constitute a clearly unwarranted invasion of personal privacy.

(Catalog of Federal Domestic Assistance Programs Nos. 93.837, Heart and Vascular Diseases Research; 93.838, Lung Diseases Research; and 93.839, Blood Diseases and Resources Research, National Institutes of Health)

Dated: October 17, 1994.

Susan K. Feldman,

Committee Management Officer, NIH.

[FR Doc. 94-26095 Filed 10-20-94; 8:45 am]

BILLING CODE 4140-01-M

National Institute of General Medical Sciences; Amended Notice of Meeting

Notice is hereby given of a change in the November 9-10, 1994 meeting of the Cellular and Molecular Basis of Disease Review Committee and November 17-18, 1994 meeting of the Pharmacological Sciences Review Committee of the National Institute of General Medical Sciences, which was published in the **Federal Register** on September 26 (48 FR 39299).

The closed session of the Cellular and Molecular Basis of Disease Review Committee was to have convened at the Hyatt Regency Hotel, but will now meet in Building 31C, Conference Room 7, National Institutes of Health, 9000 Rockville Pike, Bethesda, Maryland 20892. The closed session of the Pharmacological Sciences Review Committee was to have convened at the Embassy Suites, Chevy Chase Pavillion, but will now meet in Building 31C, Conference Room 8, National Institutes of Health, 9000 Rockville Pike, Bethesda, Maryland 20892.

Dated: October 17, 1994.

Susan K. Feldman,

Committee Management Office, NIH.

[FR Doc. 94-26097 Filed 10-20-94; 8:45 am]

BILLING CODE 4140-01-M

Division of Research Grants; Notice of Meeting of the Division of Research Grants Advisory Committee

Pursuant to Pub. L. 92-463, notice is hereby given of the meeting of the Division of Research Grants Advisory Committee, November 21-22, 1994, Building 31C, Conference Room 10, National Institutes of Health, 9000 Rockville Pike, Bethesda, Maryland 20892.

The entire meeting will be open to the public from 8:30 a.m. on November 21 to adjournment on November 22. The topics for the meeting will include, among others, the Report of the Clinical Research Study Group, triage of grant applications, and the reinvention roundtable on peer review. Attendance by the public will be limited to space available.

The Office of Committee Management, Division of Research Grants, Westwood Building, Room 433, National Institutes of Health, Bethesda, Maryland 20892, telephone (301) 594-

7265, will furnish a summary of the meeting and a roster of the committee members.

Dr. Samuel Joseloff, Executive Secretary of the Committee, Westwood Building, Room 449, National Institutes of Health, Bethesda, Maryland 20892, phone (301) 594–7248, will provide substantive program information upon request.

Individuals who plan to attend and need special assistance, such as sign language interpretation or other reasonable accommodations, should contact the Executive Secretary at least two weeks in advance of the meeting.

Dated: October 17, 1994.

Susan K. Feldman,

Committee Management Officer, NIH.

[FR Doc. 94–26096 Filed 10–20–94; 8:45 am]

BILLING CODE 4140–01–M

Division of Research Grants; Notice of Closed Meetings

Pursuant to Section 10(d) of the Federal Advisory Committee Act, as amended (5 U.S.C. Appendix 2), notice is hereby given of the following Division of Research Grants Special Emphasis Panels (SEPs) meetings:

Purpose/Agenda: To review individual grant applications.

Name of SEP: Microbiological and Immunological Sciences.

Date: November 1, 1994.

Time: 1:00 p.m.

Place: NIH, Westwood Building, Room A10, Telephone Conference.

Contact Person: Dr. Mohindar Poonian, Scientific Review Administrator, 5333 Westbard Ave., Room A10, Bethesda, MD 20892, (301) 594–7112.

Name of SEP: Behavioral and Neurosciences.

Date: November 4, 1994.

Time: 2:00 p.m.

Place: NIH, Westwood Building, Room 319C, Telephone Conference.

Contact Person: Dr. Anita Sostek, Scientific Review Administrator, 5333 Westbard Ave., Room 319C, Bethesda, MD 20892, (301) 594–7358.

Name of SEP: Behavioral and Neurosciences.

Date: November 10, 1994.

Time: 12:00 Noon.

Place: NIH, Westwood Building, Room 325B, Telephone Conference.

Contact Person: Dr. Luigi Giacometti, Scientific Review Admin., 5333 Westbard Ave., Room 325B, Bethesda, MD 20892, (301) 594–7132.

Name of SEP: Clinical Sciences.

Date: November 29, 1994.

Time: 2:00 p.m.

Place: NIH, Westwood Building, Room 349, Telephone Conference.

Contact Person: Ms. Jo Pelham, Scientific Review Administrator, 5333 Westbard Ave., Room 349, Bethesda, MD 20892, (301) 594–7254.

Name of SEP: Multidisciplinary Sciences.

Date: November 20–22, 1994.

Time: 7:00 p.m.

Place: New Haven Medical Hotel, New Haven, CT.

Contact Person: Dr. Donald Schneider, Scientific Review Admin., 5333 Westbard Ave., Room 2A05, Bethesda, MD 20892, (301) 594–7053.

The meetings will be closed in accordance with the provisions set forth in sec. 552b(c)(4) and 552b(c)(6), Title 5, U.S.C. Applications and/or proposals and the discussions could reveal confidential trade secrets or commercial property such as patentable material and personal information concerning individuals associated with the applications and/or proposals, the disclosure of which would constitute a clearly unwarranted invasion of personal privacy.

This Notice is being published less than 15 days prior to the meetings due to the difficulty of coordinating the attendance of members because of conflicting schedules.

(Catalog of Federal Domestic Assistance Program Nos. 93.306, 93.333, 93.337, 93.393–93.396, 93.837–93.844, 93.846–93.878, 93.892, 93.893, National Institutes of Health, HHS).

Dated: October 17, 1994.

Susan K. Feldman,

Committee Management Officer, NIH.

[FR Doc. 94–26098 Filed 10–20–94; 8:45 am]

BILLING CODE 4140–01–M

Public Health Service

Agency Forms Submitted to the Office of Management and Budget for Clearance

Each Friday the Public Health Service (PHS) publishes a list of information collection requests it has submitted to the Office of Management and Budget (OMB) for clearance in compliance with the Paperwork Reduction Act (44 U.S.C. Chapter 35). The following requests have been submitted to OMB since the list was last published on Friday, October 14, 1994.

(Call PHS Reports Clearance Officer on 202–690–7100 for copies of request).

1. National AIDS Hotline Survey of Callers—0920–0295 (Revision)—The hotline is intended to serve populations at increased risk of infection as well as geographical areas in which other sources of information are not readily available, e.g., rural communities. The Centers for Disease Control (CDC) is requesting clearance to gather information in order to manage the hotline more effectively and assess the impact of selected CDC public information programs. *Respondents:* Individuals or households; *Number of Respondents:* 24,440; *Number of Responses per Respondent:* 1; *Average Burden per Response:* .022 hour; *Estimated Annual Burden:* 542 hours.

2. Integrated Evaluation of Public and Private Sector Disease Reporting and Service Delivery—New—A survey methodology has been developed to collect information on cases of sexually transmitted disease seen by physicians and nursing professionals working both independently or in public and private institutions. This methodology will be used to estimate the actual number of syphilis and gonorrhea cases occurring over a one-year period. These numbers will be compared to the actual number of cases reported to the Centers for Disease Control surveillance system by State Departments of Health. *Respondents:* Individuals or households; *Number of Respondents:* 1,000; *Number of Responses per Respondent:* 1; *Average Burden per Response:* .882 hours; *Estimated Annual Burden:* 882 hours.

3. Reporting and Recordkeeping for Electronic Products-Specific Product Requirements—0910–0213—The Food and Drug Administration (FDA) has responsibility to protect the public from unnecessary exposure to radiation from electronic products. Information from manufacturers and assemblers about their products is provided to FDA and users to make adequate safety decisions.

Note: See 0910–0025 for changes affecting number of records with five-year retention.

Respondents: Businesses or other for-profit, Small businesses or organizations.

Title	Number of respondents	Number of responses per respondent	Average burden per response (hours)
Reporting: 21 CFR 1020, 30, 40, & 50 Performance Standards for Specific Electronic Products	3,602	6.38	10.89

Title	Number of respondents	Number of responses per respondent	Average burden per response (hours)
Recordkeeping: CFR 1020, 30, 40, & 50 Performance Standards for Specific Electronic Products	105	1	0.90
Estimated Total Annual Burden: 39,313 hours			

4. Evaluation of Business—Related AIDS Information and Education Program (BRTA)—New—The purpose of collecting this data is to track the spread and success of the Business Responds to AIDS (BRTA) program and to identify factors influencing the decision of businesses to adopt the various components of the program. This information will ultimately allow the Centers for Disease Control (CDC) to adjust BRTA services and materials to make them more accessible and useful to businesses. *Respondents:* Businesses or other for-profit, Small businesses or organizations; *Number of Respondents:* 2,250; *Number of Responses per Respondent:* 1.097; *Average Burden per Response:* 0.135 hour; *Estimated Annual Burden:* 335 hours.

5. Surveys of K ey Informants in Intervention and Comparison Communities for the Community Intervention Trial for Smoking Cessation (COMMIT)—New—The National Cancer Institute (NCI) conducted the Community Intervention Trial for Smoking Cessation (COMMIT). This large-scale trial tested community-based strategies to produce long-term cessation among smokers, particularly heavy smokers. Clearance is now being requested for the surveys of key informants in the intervention and comparison communities as follow-up to the trial. *Respondents:* Individuals or households, State or local governments, Businesses or other for-profit, Non-profit institutions, Small businesses or organizations: *Number of Respondents:* 413; *Number of Responses per Respondent:* 1; *Average Burden per Response:* 0.506 hours; *Estimated Annual burden:* 209 hours.

Written comments and recommendations concerning the proposed information collections should be sent within 30 days of this notice directly to the OMB Desk Officer designated below at the following address:

Shannah Koss,

Human Resources and Housing Branch, New Executive Office Building, Room 3002, Washington, D.C. 20503.

Dated: October 17, 1994.

James Scanlon,

Director, Division of Data Policy, Office of Health Planning and Evaluation.

[FR Doc. 94–26162 Filed 10–20–94; 8:45 am]

BILLING CODE 4160–17–M

[GN# 2281]

National Center for Health Statistics; The ICD–9–CM Coordination and Maintenance Committee; Meeting

AGENCY: National Center for Health Statistics, DHHS.

ACTION: Notice of meeting.

SUMMARY: The ICD–9–CM Coordination and Maintenance Committee (C&M) will be holding its final meeting of the year on Thursday and Friday, December 1 and 2, 1994. The C&M is a public forum for the presentation of proposed modifications to the International Classification of Diseases, ninth-revision, clinical modification.

DATES: The meeting will be held on December 1 and 2, 1994 from 9:00 a.m.–5:00 p.m.

ADDRESSES: The Hubert H. Humphrey building, room 703A, 200 Independence Ave., Washington, DC.

FOR FURTHER INFORMATION CONTACT: Amy Blum 301–436–4216.

SUPPLEMENTARY INFORMATION: Tentative agenda, Morbid Obesity, "History of" thrombosis, External Causes of injury and poisoning, Continuous anticoagulation therapy status, "code also notes," Anesthesia, Coronary Stents, Cryoanalgesia, Blood collection procedures, Heart Assist device, Addenda.

Sue Meads,

R.R.A., Co-chair, ICD–9–CM Coordination and Maintenance Committee.

[FR Doc. 94–26167 Filed 10–20–94; 8:45 am]

BILLING CODE 4160–18–M

Prime Vendor Program Information Meeting

AGENCY: Public Health Service, HHS.

ACTION: Notice of Prime Vendor Program Information Meeting.

SUPPLEMENTARY INFORMATION: Section 602 of Public Law 102–585, the "Veterans Health Care Act of 1992," enacted section 340B of the Public Health Service Act, "Limitation on Prices of Drugs Purchased by Covered Entities." Section 340B provides that a manufacturer who sells covered outpatient drugs to eligible entities must sign an agreement with the Secretary of HHS in which the manufacturer agrees to charge a price for covered outpatient drugs that will not exceed an amount determined under a statutory formula.

Currently, the Public Health Service (PHS) Drug Pricing Program has approximately 11,000 entities eligible to access section 340B discount pricing. These include certain Federally-qualified health centers, family planning projects, programs for AIDS patients, Black Lung clinics, Comprehensive hemophilia diagnostic and treatment centers, Native Hawaiian health centers, clinics treating tuberculosis and sexually transmitted diseases, and disaproportionate share hospitals. The names of these eligible entities are listed on the PHS Drug Pricing Computer Bulletin Board. To access this list of entities plus other program information (e.g., **Federal Register** notices and model discount calculations) call (301) 594–4992.

Section 340B(a)(8) directs the Secretary to establish a prime vendor program under which eligible entities may enter into contracts with a prime vendor(s). The PHS is currently developing a prime vendor program which will include both drug price as well as drug distribution fee negotiating capability and anticipates entering into an agreement with an organization(s) to operate the program.

The PHS will hold a meeting for all parties interested in submitting proposals to operate the prime vendor program. The purpose of the meeting is the disseminate necessary program information and to collect information concerning the number, various types,

and relative capabilities of the interested parties.

FOR FURTHER INFORMATION CONTACT: Anyone interested in attending the meeting should contact CAPT William Matthews, Office of Drug Pricing, Bureau of Primary Health Care, 4350 East West Highway, West Tower, 10th Floor, Bethesda, MD, 20814, tel: (301) 594-0299.

DATE AND TIME: November 10, 1994, 10 a.m. to 12 p.m.

PLACE: Hyatt Regency Washington, 400 New Jersey Avenue NW., Washington, DC 20001, (202) 737-1234.

Dated: October 18, 1994.

Ciro V. Sumaya,

Administrator, Health and Human Services.

[FR Doc. 94-26140 Filed 10-20-94; 8:45 am]

BILLING CODE 4160-15-M

Title III of the Public Health Service Act; Delegation of Authority

Notice is hereby given that I have delegated to the Administrator, Agency for Health Care Policy and Research, with authority to redelegate, insofar as they pertain to the functions assigned to the Agency, the following authorities vested in the Assistant Secretary for Health by the Secretary on January 14, 1981, under Title III of the Public Health Service Act, General Powers and Duties of the Public Health Service, (42 U.S.C. 241 *et seq.*), as amended.

(1) Section 301 of the Public Health Service Act (42 U.S.C. 241), as amended, authority relative to research, investigation, and testing functions; (2) Section 304 of the Public Health Service Act (42 U.S.C. 242b), as amended, general authority respecting research, evaluations, and demonstrations in health statistics, health services, and health care technology; (3) Section 307 of the Public Health Service Act (42 U.S.C. 2421), as amended, international cooperation authority; (4) Section 308 of the Public Health Service Act (42 U.S.C. 242m), as amended, insofar as general provisions apply to sections 304, 306, and 307; (5) Section 310 of the Public Health Service Act (42 U.S.C. 242n), as amended, authority relative to health conferences and health education information.

The authorities herein delegated do not include: (1) The authority to prescribe regulations; or (2) the authority under Section 304(b)(4) relative to the acquisition, construction, improvement, repair, operation, and maintenance of real property.

This delegation supersedes the March 22, 1985, delegation by the Acting Assistant Secretary for Health to the Director, National Center for Health Services Research and Health Care Technology Assessment; insofar as it pertains to authorities under Title III of the Public Health Service Act.

Previous delegations and redelegations to other officials currently within the Agency for Health Care Policy and Research of authorities under Title III of the Public Health Service Act may continue in effect for no longer than 90 days from the effective date of this delegation, provided they are consistent with this delegation.

This delegation became effective on October 5, 1994.

Dated: October 5, 1994.

Philip R. Lee,

Assistant Secretary for Health.

[FR Doc. 94-26075 Filed 10-20-94; 8:45 am]

BILLING CODE 4160-90-M

Social Security Administration

Agency Forms Submitted to the Office of Management and Budget for Clearance

Normally on Fridays, the Social Security Administration publishes a list of information collection packages that have been submitted to the Office of Management and Budget (OMB) for clearance in compliance with P.L. 96-511, The Paperwork Reduction Act. The following clearance packages have been submitted to OMB since the last list was published in the **Federal Register** on Friday, October 7, 1994.

(Call Reports Clearance Officer on (410) 965-4142 for copies of package)

1. Supplemental Security Income Reply Form—0960-NEW. The information on form SSA-417 will be used to contact an applicant, whose claim for Supplemental Security Income (SSI) payments was denied, if he or she checks "yes" on this form. The respondents will be applicants for SSI whose claim was denied.

Number of Respondents: 60,000
Frequency of Response: 1
Average Burden Per Response: 2 minutes
Estimated Annual Burden: 2,000 hours

2. Claimant's Statement When Request for Hearing is Filed and the Issue is Disability—0960-0316. The information on form HA-4486 is used by the Social Security Administration to update the work background and medical history of an individual whose claim for benefits based on disability has been denied and who requested a hearing. The respondents are such claimants.

Number of Respondents: 283,460
Frequency of Response: 1
Average Burden Per Response: 15 minutes
Estimated Annual Burden: 70,865 hours

3. Report of Function-Child (5 forms-various ages)—0960-NEW. The information on forms SSA-3375, 6, 7, 8, and 9 will be used by the Social Security Administration to help determine if a child claiming title XVI disability benefits is disabled. The respondents will be parents or guardians who file for such benefits on behalf of a child.

Number of Respondents: 500,000
Frequency of Response: 1
Average Burden Per Response: 20 minutes
Estimated Annual Burden: 166,667 hours

4. Plan for Achieving Self-Support (PASS) study form. The information on the questionnaire will be used by the Social Security Administration to determine the effectiveness of the Agency's implementation, monitoring, and control of the PASS activities. The study form will be used to obtain various PASS information from Supplemental Security Income recipients.

Number of Respondents: 1,900
Frequency of Response: 1
Average Burden Per Response: 20 minutes
Estimated Annual Burden: 633 hours
OMB Desk Officer: Laura Oliven

Written comments and recommendations regarding these information collections should be sent directly to the appropriate OMB Desk Officer designated above at the following address: Office of Management and Budget, OIRA, New Executive Office Building, Room 10230, Washington, D.C. 20503.

Dated: October 18, 1994.

Charlotte Whitenight,

Reports Clearance Officer, Social Security Administration.

[FR Doc. 94-26163 Filed 10-20-94; 8:45 am]

BILLING CODE 4190-29-P

DEPARTMENT OF HOUSING AND URBAN DEVELOPMENT

Office of the Assistant Secretary for Community Planning and Development

[Docket No. N-94-1917; FR-3778-N-07]

Federal Property Suitable as Facilities To Assist the Homeless

AGENCY: Office of the Assistant Secretary for Community Planning and Development, HUD.

ACTION: Notice.

SUMMARY: This Notice identifies unutilized, underutilized, excess, and surplus Federal property reviewed by HUD for suitability for possible use to assist the homeless.

ADDRESSES: For further information, contact William Molster, room 7262, Department of Housing and Urban Development, 451 Seventh Street SW, Washington, DC 20410; telephone (202) 708–4300; TDD number for the hearing- and speech-impaired (202) 708–2565 (these telephone numbers are not toll-free), or call the toll-free Title V information line at 1–800–927–7588.

SUPPLEMENTARY INFORMATION: In accordance with 56 FR 23789 (May 24, 1991) and section 501 of the Stewart B. McKinney Homeless Assistance Act (42 U.S.C. 11411), as amended, HUD is publishing this Notice to identify Federal buildings and other real property that HUD has reviewed for suitability for use to assist the homeless. The properties were reviewed using information provided to HUD by Federal landholding agencies regarding unutilized and underutilized buildings and real property controlled by such agencies or by GSA regarding its inventory of excess or surplus Federal property. This Notice is also published in order to comply with the December 12, 1988 Court Order in *National Coalition for the Homeless v. Veterans Administration*, No. 88–2503–OG (D.D.C.).

Properties reviewed are listed in this Notice according to the following categories: Suitable/available, suitable/unavailable, suitable/to be excess, and unsuitable. The properties listed in the three suitable categories have been reviewed by the landholding agencies, and each agency has transmitted to HUD: (1) Its intention to make the property available for use to assist the homeless, (2) its intention to declare the property excess to the agency's needs, or (3) a statement of the reasons that the property cannot be declared excess or made available for use as facilities to assist the homeless.

Properties listed as suitable/available will be available exclusively for homeless use for a period of 60 days from the date of this Notice. Homeless assistance providers interested in any such property should send a written expression of interest to HHS, addressed to Judy Breitman, Division of Health Facilities Planning, U.S. Public Health Service, HHS, room 17A–10, 5600 Fishers Lane, Rockville, MD 20857; (301) 443–2265. (This is not a toll-free number.) HHS will mail to the interested provider an application packet, which will include instructions for completing the application. In order to maximize the opportunity to utilize a suitable property, providers should submit their written expressions of interest as soon as possible. For complete details concerning the processing of applications, the reader is encouraged to refer to the interim rule governing this program, 56 FR 23789 (May 24, 1991).

For properties listed as suitable/to be excess, that property may, if subsequently accepted as excess by GSA, be made available for use by the homeless in accordance with applicable law, subject to screening for other Federal use. At the appropriate time, HUD will publish the property in a Notice showing it as either suitable/available or suitable/unavailable.

For properties listed as suitable/unavailable, the landholding agency has decided that the property cannot be declared excess or made available for use to assist the homeless, and the property will not be available.

Properties listed as unsuitable will not be made available for any other purpose for 20 days from the date of this Notice. Homeless assistance providers interested in a review by HUD of the determination of unsuitability should call the toll free information line at 1–800–927–7588 for detailed instructions or write a letter to William Molster at the address listed at the beginning of this Notice. Included in the request for review should be the property address (including zip code), the date of publication in the **Federal Register**, the landholding agency, and the property number.

For more information regarding particular properties identified in this Notice (*i.e.*, acreage, floor plan, existing sanitary facilities, exact street address), providers should contact the appropriate landholding agencies at the following addresses: U.S. Navy: John J. Kane, Deputy Division Director, Dept. of Navy, Real Estate Operations, Naval Facilities Engineering Command, 200 Stovall Street, Alexandria, VA 22332–2300; (703) 325–0474; GSA: Leslie Carrington, Federal Property Resources Services, GSA, 18th and F Streets NW, Washington, DC 20405; (202) 208–0619; Dept. of Interior: Lola D. Knight, Property Management Specialist, Dept. of Interior, 1849 C St. NW, Mailstop 5512–MIB, Washington, DC 20240; (202) 208–4080; Dept. of Energy: Tom Knox, Acting Team Leader, Facilities Planning and Acquisition Branch, FM–20, Forrestal Bldg., Room 6H–058, Washington, DC 20585; (202) 586–1191; (These are not toll-free numbers).

Dated: October 14, 1994.

Jacquie M. Lawing,

Deputy Assistant Secretary for Economic Development.

Title V, Federal Surplus Property Program—Federal Register Report for 10/21/94

Suitable/Available Properties

BUILDINGS (by State)

Kentucky

Federal Building
4th & Main Streets
Danville Co: Boyle KY 40422–
Landholding Agency: GSA
Property Number: 549430015
Status: Excess
Comment: 4890 sq. ft., 3-story, stone-concrete foundation, presence of asbestos, first floor occupied by US Court of Appeals Judge & staff until expiration of his tenure
GSA Number: 4–G–KY–604

Massachusetts

NPS Tract 245–36
Goose Pond Road
Tyringham Co: Berkshire MA 01264–
Landholding Agency: Interior
Property Number: 619440001
Status: Excess
Comment: above ground pool and deck, residents stay at house on property, Appalachian Natl. Scenic Trail, off-site use only

Virginia

NPS Tract 422–25
Former White property
County Rd. 602 on Moore run near 4–H Camp
Front Royal Co: Warren VA 22630–
Landholding Agency: Interior
Property Number: 619440002
Status: Excess
Comment: 864 sq. ft., 2-story frame residence, w/Natl. Appalachian Trails System Act, off-site use only

West Virginia

Point Pleasant Depot
State Route 35
Point Pleasant Co: Mason WV
Landholding Agency: GSA
Property Number: 549430013
Status: Excess
Comment: 2400 sq. ft. masonry storage bldg., 936 sq. ft. garage, on 275 acres of land
GSA Number: WV0015PP

Suitable/Unavailable Properties

LAND (by State)

Florida

Miami IFSR Land Site
Tract 5, N.W. 87th Ave.
Miami Co: Dade FL 33147–
Landholding Agency: GSA
Property Number: 549430014
Status: Excess
Comment: 80 acres being developed into a regional park, periodic flooding, encumbered by a 50-year lease, restricted airspace
GSA Number: 4–U–FL–1082

Unsuitable Properties

BUILDINGS (by State)

Hawaii

Bldg. 54
Naval Magazine Lualualei
Lualualei Co: Oahu HI 96792–
Landholding Agency: Navy
Property Number: 779440002
Status: Unutilized
Reason: Extensive deterioration

Bldg. 55
Naval Magazine Lualualei
Lualualei Co: Oahu HI 96792–
Landholding Agency: Navy
Property Number: 779440003
Status: Unutilized
Reason: Extensive deterioration

Bldg. 56
Naval Magazine Lualualei
Lualualei Co: Oahu HI 96792–
Landholding Agency: Navy
Property Number: 779440004
Status: Unutilized
Reason: Extensive deterioration

Bldg. 58
Naval Magazine Lualualei
Lualualei Co: Oahu HI 96792–
Landholding Agency: Navy
Property Number: 779440005
Status: Unutilized
Reason: Extensive deterioration

Bldg. 59
Naval Magazine Lualualei
Lualualei Co: Oahu HI 96792–
Landholding Agency: Navy
Property Number: 779440006
Status: Unutilized
Reason: Extensive deterioration

Bldg. 510
Naval Magazine Lualualei
Lualualei Co: Oahu HI 96792–
Landholding Agency: Navy
Property Number: 779440007
Status: Unutilized
Reason: Extensive deterioration

Bldg. 511
Naval Magazine Lualualei
Lualualei Co: Oahu HI 96792–
Landholding Agency: Navy
Property Number: 779440008
Status: Unutilized
Reason: Extensive deterioration

Illinois

Bldg. 605
Argonne National Laboratory
Argonne Co: DuPage IL 60439–
Landholding Agency: Energy
Property Number: 419440001
Status: Excess
Reason: Extensive deterioration

Washington

Bldg. 14
Naval Undersea Warfare Center Div., Keyport
Co: Kitsap WA 98345–7610
Landholding Agency: Navy
Property Number: 779440001
Status: Unutilized
Reason: Secured Area

LAND (by State)

North Carolina

Land—16.02 acres
Portion VA Hospital
Fayetteville Co: Cumberland NC 28302–
Landholding Agency: GSA
Property Number: 549440001
Status: Excess
Reason: Other
Comment: Landlocked
GSA Number: 4–GI–NC–437A

[FR Doc. 94–25976 Filed 10–20–94; 8:45 am]

BILLING CODE 4210–29–M

DEPARTMENT OF THE INTERIOR

Bureau of Land Management

[CO–056–1620–00]

Notice of Emergency Closure

AGENCY: Bureau of Land Management, Interior.

ACTION: Notice of emergency closure of Bronson Peak area in Rio Grande County, Colorado to off-road vehicle use from October 15, 1994 and shall remain in effect unless revised, revoked or amended.

SUMMARY: Notice is hereby given that effective October 15, 1994, public lands described below are closed to all Off-Road Vehicle use. Under the authority and requirement of 43 CFR 8364.1 and 43 CFR 8341.1 and the Federal Land Policy and Management Act of 1976. This closure affects 3760 acres of public lands in Rio Grande County located in the area south of Monte Vista, Colorado and west of the Monte Vista National Wildlife Refuge and east of BLM Road 5100 in T.38N., R.7E., Sections 34 & 35 and T.37N., R7E., Sections 2, 3, 10, 11, 14 and 15. This area closure will eliminate an extremely dangerous situation where a considerable number of hunters shoot elk as they leave the Wildlife Refuge in the early morning. The closure will also protect the fragile vegetation and highly erodible soils from the adverse effects of vehicle travel during the wet months of the year. This action does not effect hunting use in the area, but is intended to make the area safer for hunters and the general public, and protect the natural resource from damage especially during the fall/winter months when soils are often wet. These restrictions do not apply to emergency, law enforcement and Federal, State or other government personnel who are in the area for official or emergency purposes and who are expressly authorized or otherwise officially approved by BLM. Any person who fails to comply with this closure order may be subject to the penalties provided by 43 CFR 8340.0–7 and/or 43 CFR 8360.0–7 which includes fines not to exceed $1000 and/or imprisonment not to exceed 12 months. Notice of this closure will be posted near or within the area, San Luis Resource Area Office and at the Canon City District Office.

DATES: This emergency closure is in effect from October 15, 1994 and shall remain in effect unless revised, revoked or amended.

ADDRESSES: Comments can be directed to the Area Manager, San Luis Resource Area, 1921 State St., Alamosa, CO 81101 or District Manager, Bureau of Land Management, Canon City District Office, 3170 East Main Street, Canon City, CO 81212.

FOR FURTHER INFORMATION CONTACT: Julie Howard, Area Manager at (719) 589–4975.

Stuart Parker,

Acting District Manager.

[FR Doc. 94–26114 Filed 10–20–94; 8:45 am]

BILLING CODE 4310–JB–M

[NM–930–1320–01; OKNM 91190, et al.]

Notice of Coal Lease Offering; Oklahoma

AGENCY: Bureau of Land Management, Interior.

ACTION: Notice of competitive coal lease sale by sealed bid.

SUMMARY: Notice is hereby given that certain coal resources in the tracts described below in LeFlore and Latimer Counties, Oklahoma, will be offered for competitive lease by sealed bid in accordance with the provisions of the Mineral Leasing Act of 1920, as amended (30 U.S.C. 181 *et seq.*), and the Surface Mining and Reclamation Act of 1977.

DATES: The lease sale will be held at 10:00 a.m., November 14, 1994. Sealed bids must be submitted on or before 10:00 a.m., November 14, 1994. Each bid should be clearly identified by tract and/or serial number on the outside of the envelope containing the bid(s).

ADDRESSES: The lease sale will be held in the Bureau of Land Management (BLM) Conference Room, Tulsa District Office, 9522–H East 47th Place, Tulsa, Oklahoma 74145. Sealed bids must be submitted to the Cashier, Tulsa District Office, Attention: Laura Stich, 9522–H East 47th Place, Tulsa, Oklahoma 74145.

FOR FURTHER INFORMATION CONTACT: Gary Stephens, BLM, New Mexico State Office, (505) 438–7451.

SUPPLEMENTARY INFORMATION: The tracts will be leased to the qualified bidder(s) submitting the highest cash offer provided that the high bid meets the fair market value determination of the coal resource. The minimum bid for these

tracts is $100.00 per acre, or fraction thereof. No bid that is less than $100.00 per acre, or fraction thereof, will be considered. This $100.00 per acre is a regulatory minimum, and is not intended to reflect fair market value for the tracts. Bids should be sent by certified mail, return receipt, or be hand-delivered. The cashier will issue a receipt for each hand-delivered bid. Bids received after the time specified above will not be considered. The fair market value of each tract will be determined by the authorized officer after the sale.

If identical high sealed bids are received, the tying high bidders will be requested to submit follow-up sealed bids until a high bid is received. All tie-breaking sealed bids must be submitted within 15 minutes following the Sale Official's announcement at the sale that identical high bids have been received.

All the tracts in this lease offering contain split estate lands. Except where specified, the proposed mining method is surface mining techniques. The regulations in 43 CFR part 3427 set out the protection that shall be afforded qualified surface owners of split estate lands (as defined in 43 CFR 3400.0–5(gg)).

Tract No. 1—Spiro Tract—OKNM 91190
Coal Offered:

The coal resource to be offered is limited to recoverable reserves by underground mining methods in the following described lands in LeFlore County, Oklahoma:

T. 8 N., R. 26 E., I.M.
Sec. 4, lots 3 and 4, NW¼SW¼NW¼;
Sec. 5, lots 1 to 4, inclusive, SW¼NE¼, N½SW¼NE¼, SW¼SE¼NE¼, and S½NW¼;
Sec. 6, lots 1 and 2, S½NE¼.
T. 9 N., R. 26 E., I.M.
Sec. 20, SE¼SE¼
Sec. 21, SE½SE½
Sec. 28, N½, N½SW¼, SW¼SW¼, N½SE¼SW¼, N½N½SE¼, SW¼NE¼SE¼, S½NW¼SE¼, and NW¼SW¼SE¼
Sec. 29, E½, NE¼NW¼, S½NW¼, and SW¼;
Sec. 30, lots 3 and 4, SE¼NE¼, E½SW¼, and SE¼;
Sec. 31, lots 1 to 4, inclusive, E½ and E½W½;
Sec. 32, NE¼, W½, N½SE¼, SW¼SE¼, N½SE¼SE¼, and SW¼SE¼SE¼
Sec.
Sec. 33, NW¼NW¼NW¼.
Containing 3,429.04 acres, more or less.

Total recoverable reserves are estimated to be 15,320,000 tons. This tract has a single coal seam, the Hartshorne Coal, which crops out near the southeastern boundary of the tract and dips northwest at 6 to 8 degrees. The arithmetic average thickness of the coal based on 25 points, is 5.21 feet. The maximum depth is in excess of 800 feet.

The Hartshorne Coal seam analysis for this tract is: Moisture—1.86 percent; Ash—13.32 percent; Volatile Matter—16.37 percent; Fixed Carbon—68.79 percent; Sulfur—1.80 percent; and BUT/lb—12,834.

Tract No. 2—West Red Oak Tract (OKNM 91568)

T. 6 N., R. 21 E., I.M.
Sec. 31, lots 2, 3, and 4, S½S½NE¼, S½SE¼NW¼, E½SW¼, and SE¼;
Sec. 32, S½S½N½, N½S½, and N½S½S½;
Sec. 33, SW¼SE¼NE¼, S½SW¼NE¼, S½S½NW¼, N½SW¼, N½S½SW¼, W½NE¼SE¼, NW¼SE¼, N½SW¼SE¼, and NW¼SE¼SE¼;
Sec. 35, E½SW¼ and SE¼.
T. 6 N., R. 22 E., I.M.
Sec. 31, lots 3 and 4, E½SW¼ and SE¼;
Sec. 32, N½S½ and N½S½S½;
Sec. 33, N½SW¼ and N½S½SW¼.
Containing 1,933.46 acres, more or less.

The lands described below may only be mined by underground mining techniques, NO surface mining is allowed.

T. 6 N., R. 21 E., I.M.
Sec. 31, lots 2, 3, and 4, S½S½NE¼, S½SE¼NW¼, and E½SW¼;
Sec. 32. SE¼;
Sec. 33, SW¼SE¼NE¼, S½SW¼NE¼, and S½S½NW¼;
Sec. 35, S½SE¼.
T. 6 N., R. 22 E., I.M.
Sec. 32, N½S½ and N½S½S½;
Sec. 33, N½SW¼ and N½S½SW¼.
Total recoverable reserves are estimated to be 11,136,600 tons.

The coal beds present in this revised application area are the Upper and Lower McAlester Coals of Pennsylvanian Age. About 7.5 miles of cropline are present in this area, which now contains 1,933.46 acres. The Upper McAlester Coal averages 2.1 feet thick, and the Lower McAlester Coal averages 2.0 feet thick. In general, the Upper McAlester is more consistent in thickness than the Lower McAlester which has a tendency, in places, to change to a boney coal and develop shale splits in the lower part of this bed.

These two coals are separated by about 61 to 57 feet of gray shale in the Western two-thirds of this application, and about 51 feet of gray shale in the Eastern third of this application. The Upper McAlester Coal overburden was described consistently on the drill hole logs as gray shale. The drill hole information indicates that these two beds have an average dip to the North of 6.9 degrees along the Western 3.5 miles (just west of the town of Red Oak), and an average dip of 13 degrees (just East of the Town of Red Oak), on to the Eastern edge of the application area where the dip increases to a little more than 17 degrees.

The In-Place coal present in this area was calculated to be 5.1 million tons for the Upper McAlester Coal, and 6.0 million tons for the Lower McAlester Coal. This is based on 1,800 tons per acre-foot using the above stated average thickness.

Minable reserve base and recoverable coal reserves for the area were based on (1) geology and coal quality data; (2) assumptions used in determining maximum economic recovery for the original lease application report; and (3) data adequacy standards for Federal coal leasing in Southeastern Oklahoma.

There are no quality analysis in the CRO-CDP maps which can be specifically identified with this tract. However, from Trumball, et al., 1957, we have the following quality data for the McAlester Coal in this part of Oklahoma: Moisture—2.5 percent; Volatile Matter—31.6 percent; Fixed Carbon—66.3 percent; Ash—11.7 percent; Sulfur—3.2 percent; and BTU/lb–unknown.

Surface Owner Consent Information

It has been determined that this tract has six qualified surface owners. Copies of consents granted by the qualified surface owners are attached to the detailed statement of sale. The lands and the purchase price of these consents are shown below:

T. 6 N., R. 21 E., I.M.—$250,000
Sec. 32, SW¼.
T. 6 N., R. 21 E., I.M.—$250,000
Sec. 33, SW¼, W½SE¼, and W½E½SE¼.
T. 6 N., R. 21 E., I.M.—$1,800
Sec. 35, SW¼ and S½NW¼ (lying and being South of U.S. Highway 270)
T. 6 N., R. 21 E., I.M.—$50,000
Sec. 35, N½SE¼, less and except:
Beginning at the NW¼ corner of the NW¼SE¼;
Thence, East 725.00 feet;
Thence, South 600.83 feet;
Thence, West 725.00 feet;
Thence, North 600.83 feet to the point of beginning.
T. 6 N., R. 21 E., I.M.—$3,500
Sec. 35, NW¼SE¼,
Beginning at the Northwest corner of the said NW¼SE¼;
Thence, East a distance of 725.00 feet;
Thence, South a distance of 600.83 feet;
Thence, West a distance of 725.00 feet;
Thence, North a distance of 600.83 feet; to the point of beginning.
T. 6 N., R. 22 E., I.M.—$3,260
Sec. 31, lots 3 and 4, E½SW¼ and SE¼.

Tract No. 3—Heavener Tract—OKNM 91569
Coal Offered:

The coal resource to be offered in Tract No. 3 (OKNM 91569), will be mined by both surface and underground mining methods in

the following described lands located in LeFlore County, Oklahoma:

T. 5 N., R. 26 E., I.M.,
Sec. 23, SE¼SE¼;
Sec. 24, S½SW¼ and SE¼;
Sec. 25, N½NW¼;
Sec. 26, N½;
Sec. 27, S½N½, N½S½, and SW¼SW¼;
Sec. 28, S½;
Sec. 29, N½SE¼, N½SW¼SE¼, and SE¼SE¼.
T. 5 N., R. 27 E., I.M.,
Sec. 15, lots 2 and 3;
Sec. 16, SE¼NE¼ and S½;
Sec. 17, SE¼SW¼ and S½SE¼;
Sec. 19, NE¼NE¼, S½N½, N½S½, and SW¼SW¼;
Sec. 20, N½NE¼ and NW¼;
Sec. 21, NW¼NW¼.

Containing 2,724.78 acres, more or less.

The lands described below may only be mined by underground mining techniques, NO surface mining is allowed.

T. 5 N., R. 26 E., I.M.,
Sec. 23, SE¼SE¼;
Sec. 24, N½SW¼SW¼;
Sec. 25, N½NW¼;
Sec. 26, NW¼NW¼;
Sec. 27, S½N½, NW¼NE¼SE¼, NW¼SE¼, and S½NE¼SE¼;
Sec. 28, N½S½ and S½SE¼;
Sec. 29, N½SE¼ and N½SW¼SE¼.
T. 5 N., R. 27 E., I.M.,
Sec. 16, N½SE¼NE¼, SW¼, S½NE¼SE¼, N½NW¼SE¼; and SW¼NW¼SE¼;
Sec. 19, NE¼NE¼, SW¼,NW¼, and W½SE¼NW¼;
Sec. 20, N½NE¼;
Sec. 21, NW¼NW¼.

The coal seams present in the application area are the Lower Hartshorne Coal (in places, the Upper Hartshorne Coal may be recoverable). The application area contains about 9 miles of cropline. USGS CRO–CDP reports cover the Western 5.5 miles of the application area. These reports show that there are four slope mines along the Lower Hartshorne cropline. No information on coal quantity and quality, or the areal extent of mining is available.

The Eastern seven miles of the application area has been strip mined. Thirty two drill holes have been identified in or near the application area. These holes provide adequate coal quantity data for about one-third of the application area. Coal thickness of the Lower Hartshorne is 5.6 feet. Total disturbance would be about 1,910.00 acres.

Total recoverable coal reserves are estimated to be 18,290,200 tons.

There are 16 quality analysis points in or near the application area. The following analysis for the Lower Hartshorne Coal provide adequate coal quality data for about one-third of the application area: Moisture—unknown; Volatile Matter—20.4 percent; Fixed Carbon—68.3 percent; Ash—10.5 percent; Sulfur—1.2 percent; and BTU/lb—13,850.

Surface Owner Information

There are ten qualified surface owners. Consents granted by the qualified surface owners have been filed with and verified by the BLM. Copies of these consents are attached to the detailed statement of sale. The lands and the purchase price of the consents are shown below:

T. 5 N., R. 26 E., I.M.—$2,500
Sec. 26, W½E½NE¼ and W½NE¼.
T. 5 N., R. 26 E., I.M.—$1,700
Sec. 26, E½NW¼.
T. 5 N., R. 26 E., I.M.—$1,100
Sec. 26, SW¼NW¼;
Sec. 27, NE¼NE¼SE¼.
T. 5 N., R. 26 E., I.M.—$400
Sec. 27, NE¼SW¼ and SE¼SW¼, lying and being North of the Arkansas Western Railroad.
T. 5 N., R. 26 E., I.M.—$745
Sec. 27, NW¼SW¼, and all that portion lying and being North of the Arkansas Western Railroad, within the SW¼SW¼.
T. 5 N., R. 26 E., I.M.—$900
Sec. 28, S½SW¼.
T. 5 N., R. 27 E., I.M.—$1,395
Sec. 15, lots 2 and 3.
T. 5 N., R. 27 E., I.M.—$2,400
Sec. 16, SE¼SE¼ and SE¼NW¼SE¼.
T. 5 N., R. 27 E., I.M.—$2,400
Sec. 17, SE¼SW¼ and S½SE¼.
T. 5 N., R. 27 E., I.M.—$3,240
Sec. 20, NW¼, less exception.

Tract No. 4—Cavanal Tract—OKNM 91590 Coal Offered

The coal resource to be offered in Tract No. 4 (OKNM 91590), will be offered for both surface and underground mining methods in the following described lands located in LeFlore County, Oklahoma:

T. 7 N., R. 24 E., I.M.
Sec. 9, SE¼SE¼;
Sec. 10, S½NE¼, SW¼, and N½SE¼;
Sec. 16, NE¼NE¼.

Containing 400.00 acres, more or less.

Total recoverable reserves are estimated to be 369,400 tons. The coal seam present in the application area is the Secor Coal. About 1.5 miles of cropline is contained within the coal lease application area. The applicant submitted lithologic logs for three drill holes without locations identified. The only analysis provided for this tract was supplied by the applicant as follows: Secor Coal: Moisture—1.2 percent; Volatile Matter—unknown; Fixed Carbon—unknown; Ash—15.2 percent; Sulfur—4.5 percent, and BTU/lb—12,991.

The lands described below may only be mined by underground mining techniques, no surface mining is allowed.

T. 7 N., R. 24 E., I.M.
Sec. 10, SE¼NE¼ and N½N½SW¼;
Sec. 16, NE¼NE¼.

Surface Owner Information

It has been determined that there is one qualified surface owner. A copy of the consent granted by the surface owner is attached to the Detailed Statement of Sale. The legal land description and the purchase price of this consent are shown below:

T. 7 N., R. 24 E., I.M.—$1,600
Sec. 10, SW¼NE¼, N½SE¼, and S½N½SW¼.

Rental and Royalty

The leases issued as a result of this lease offering will require payment of an annual rental of $3.00 per acre, or fraction thereof, and a royalty payable to the United States of 12½ percent of the value for the coal removed from a surface mine and 8 percent of the value of the coal removed from an underground mine. The value of the coal will be determined in accordance with 30 CFR § 206.250.

Notice of Availability

Bidding instructions for the offered tracts are included in the detailed Statement of Coal Lease Sale. Copies of the Statement and proposed coal lease sale are available upon request in person or by mail from the New Mexico State Office, P.O. Box 27115, 1474 Rodeo Road, Santa Fe, New Mexico 87502–0115 or the Tulsa District Office at the address shown above. The case files are available for inspection during normal business hours only at the Santa Fe, New Mexico, office at the address indicated.

Dated: October 7, 1994.

William C. Calkins,

State Director.

[FR Doc. 94–26113 Filed 10–20–94; 8:45 am]

BILLING CODE 4310–FB–M

[WY–010–5700–10; WYW–127879]

Realty Action; Direct Sale of Public Lands; Wyoming

AGENCY: Bureau of Land Management, Interior.

ACTION: Notice of realty action; sale of public land in Hot Springs County, Wyoming.

SUMMARY: The following public lands have been examined and identified as suitable for disposal under sections 203 and 209 of the Federal Land Policy and Management Act of 1976 (90 Stat. 2750; 43 U.S.C. 1713, 1719).

Sixth Principal Meridian

T. 43 N., R. 95 W.

Section 13, S½SE¼SW¼NW¼, NE¼NW¼SW¼, N½SE¼NW¼SW¼, SW¼SW¼SE¼NW¼, NE¼SW¼.

The above land aggregates 62.5 acres more or less.

FOR FURTHER INFORMATION CONTACT: Joseph Vessels, Area Manager, Bureau of Land Management, Grass Creek Resource Area, P.O. Box 119, Worland, Wyoming 82401–0119, (307) 347–9871.

SUPPLEMENTARY INFORMATION: The Bureau of Land Management proposes to sell the surface estate and unreserved mineral estate, excluding oil and gas and geothermal resources, to the town of Thermopolis pursuant to sections 203 and 209 of the Federal Land Policy and Management Act of 1976, 43 U.S.C. 1713 and 1719. The town of Thermopolis wishes to acquire the land for a community landfill.

The proposed direct sale to the town of Thermopolis would be made at fair market value. Additionally, the town of Thermopolis will be required to submit a nonrefundable application fee of $50 in accordance with 43 CFR subpart 2720, for conveyance of part of the unreserved mineral interests in the land.

The proposed sale is consistent with the Grass Creek Management Framework Plan and will serve an important public objective. The land contains no know public values. The land is within livestock grazing allotment number 00506. The environmental assessment covering the proposed sale is available for review at the Bureau of Land Management, Worland District Office, 101 South 23rd Street, Worland, Wyoming.

Conveyance of the public land will be subject to:

1. Reservation of rights-of-way for ditches and canals constructed by the authority of the United States, Act of August 30, 1890 (43 U.S.C. 945).

2. Reservation, to the United States, of oil, gas, and geothermal resources, together with the right to prospect for, mine, and remove the minerals.

3. Partial relinquishment of the Hat No. 2 mining claim, held by Wyo-Ben, Inc.

4. The purchaser shall warrant that it will indemnify and hold harmless the United States against liability that may arise out of any violation of Federal or State law in connection with use of these lands.

5. The purchaser shall comply with all Federal and State laws applicable to the disposal, placement, or release of hazardous substances.

The public land described above shall be segregated from all forms of appropriation under the public land laws, including the mining laws, upon publication of this notice in the **Federal Register**. The segregative effect will end upon issuance of the patent or 270 days from the date of the publication, whichever comes first.

For a period of forty-five (45) days from the date of issuance of this notice, interested parties may submit comments to the Bureau of Land Management, Darrell Barnes, Worland District Manager, P.O. Box 119, Worland, Wyoming 82401–0119. Any adverse comments will be evaluated by the State Director who may sustain, vacate, or modify this realty action. In the absence of any objections this proposed realty action will become final.

Dated: October 13, 1994.

Joseph T. Vessels,

Grass Creek Resource Area Manager.

[FR Doc. 94–26115 Filed 10–20–94; 8:45 am]

BILLING CODE 4310–22–P

Fish and Wildlife Service

[PRT–795602]

Receipt of Application(s) for Permit

The following applicant has applied for a permit to conduct certain activities with endangered species. This notice is provided pursuant to Section 10(c) of the Endangered Species Act of 1973, as amended (16 U.S.C. 1531, *et seq.*)

Applicant: Mr. Larry K. Kamees and Doug W. Burkett, Las Cruces, New Mexico.

The applicants request a permit to include take activities for the Aplomado falcon (*Falco femoralis septentrionalis*) for the purpose of scientific research and enhancement of propagation and survival of the species as prescribed by Service recovery documents.

Addresses: Written data or comments should be submitted to the Assistant Regional Director, Ecological Services, U.S. Fish and Wildlife Service, P.O. Box 1306, Albuquerque, New Mexico 87103, and must be received by the Assistant Regional Director within 30 days of the date of this publication.

Documents and other information submitted with this application are available for review, subject to the requirements of the Privacy Act and Freedom of Information Act, by any party who submits a written request for a copy of such documents to the above office within 30 days of the date of publication of this notice. (See *Addresses* above.)

James A. Young,

Acting Regional Director, Region 2, Albuquerque, New Mexico.

[FR Doc. 94–26137 Filed 10–20–94; 8:45 am]

BILLING CODE 4310–55–M

[PRT–676811]

Receipt of Application(s) for Permit

The following applicant has applied for a permit to conduct certain activities with endangered species. This notice is provided pursuant to Section 10(c) of the Endangered Species Act of 1973, as amended (16 U.S.C. 1531, *et seq.*)

Applicant: Regional Director, Southwest Region (2), U.S. Fish and Wildlife Service, Albuquerque, New Mexico.

The applicant requests a permit to include take activities for the plant harperella (*Ptilimnium nodosum*) for the purpose of scientific research, and enhancement of propagation and survival of the species as prescribed by Service recovery documents.

Addresses: Written data or comments should be submitted to the Assistant Regional Director, Ecological Services, U.S. Fish and Wildlife Service, P.O. Box 1306, Albuquerque, New Mexico 87103, and must be received by the Assistant Regional Director within 30 days of the date of this publication.

Documents and other information submitted with this application are available for review, subject to the requirements of the Privacy Act and Freedom of Information Act, by any party who submits a written request for a copy of such documents to the above office within 30 days of the date of publication of this notice. (See *Addresses* above.)

James A. Young,

Acting Regional Director, Region 2, Albuquerque, New Mexico.

[FR Doc. 94–26138 Filed 10–20–94; 8:45 am]

BILLING CODE 4310–55–M

INTERSTATE COMMERCE COMMISSION

Agricultural Cooperative Notice to the Commission of Intent To Perform Interstate Transportation for Certain Nonmembers

The following Notices were filed in accordance with section 10526(a)(5) of the Interstate Commerce Act. The rules provide that agricultural cooperatives intending to perform nonmember, nonexempt, interstate transportation must file the Notice, Form BOP–102, with the Commission within 30 days of its annual meeting each year. Any subsequent change concerning officers, directors, and location of transportation records shall require the filing of a supplemental Notice within 30 days of such change.

The name and address of the agricultural cooperative (1) and (2), the

location of the records (3), and the name and address of the person to whom inquiries and correspondence should be addressed (4), are published here for interested persons. Submission of information which could have bearing upon the propriety of a filing should be directed to the Commission's Office of Compliance and Consumer Assistance, Washington, DC 20423. The Notices are in a central file, and can be examined at the Office of the Secretary, Interstate Commerce Commission, Washington, DC.

(1) Knouse Foods, Inc.

(2) 800 Peach Glen Rd., Peach Glen, PA 17375.

(3) Peach Glen, PA 17375.

(4) Arlene Jennings, Peach Glen, PA 17375.

Vernon A. Williams,

Acting Secretary.

[FR Doc. 94–26155 Filed 10–20–94; 8:45 am]

BILLING CODE 7035–01–M

Notice of Intent To Engage in Compensated Intercorporate Hauling Operations

This is to provide notice as required by 49 U.S.C. 10524(b)(1) that the named corporations intend to provide or use compensated intercorporate hauling operations as authorized in 49 U.S.C. 10524(b).

A. Parent corporation and address of principal office: Osram Sylvania Inc., 100 Endicott Street, Danvers, MA 01923.

B. Wholly owned subsidiaries which will participate in the operations, address and state of incorporation: Sylvania Lighting Services Corp., Incorporated in State of Delaware.

Vernon A. Williams,

Acting Secretary.

[FR Doc. 94–26157 Filed 10–20–94; 8:45 am]

BILLING CODE 7035–01–M

[Finance Docket No. 32581]

Camp Chase Industrial Railroad Corporation—Acquisition and Operation Exemption—Line of Consolidated Rail Corporation

Camp Chase Industrial Railroad Corporation, a noncarrier, has filed a notice of exemption to acquire and operate approximately 14 miles of rail line known as the Camp Chase Industrial Track owned by Consolidated Rail Corporation, between Columbus and Lilly Chapel, OH (milepost 141.4 and milepost 155.4). The parties intended to consummate on or after October 10, 1994.[1]

Any comments must be filed with the Commission and served on: John D. Heffner, Rea, Cross, & Auchincloss, Suite 420, 1920 N Street NW., Washington, DC 20036.

This notice is filed under 49 CFR 1150.31. If the notice contains false or misleading information, the exemption is void *ab initio*. Petitions to revoke the exemption under 49 U.S.C. 10505(d) may be filed at any time. The filing of a petition to revoke will not automatically stay the transaction.

Decided: October 14, 1994.

By the Commission, David M. Konschnik, Director, Office of Proceedings.

Vernon A. Williams,

Acting Secretary.

[FR Doc. 94–26156 Filed 10–20–94; 8:45 am]

BILLING CODE 7035–01–P

[Docket No. AB–55 (Sub-No. 420X); Docket No. AB–227 (Sub-No. 5X)]

CSX Transportation, Inc.—Abandonment Exemption—Fayette and Westmoreland Counties, PA; The Wheeling & Lake Erie Railway Company—Discontinuance of Trackage Rights Exemption—Fayette and Westmoreland Counties, PA

CSX Transportation, Inc., (CSXT) and The Wheeling & Lake Erie Railway Company (W&LE) have filed a verified notice under 49 CFR 1152 Subpart F—*Exempt Abandonments and Discontinuances* for CSXT to abandon and W&LE to discontinue trackage rights over 9.56 miles of rail line between milepost 0.00 at Broad Ford and milepost 9.56 at Mt. Pleasant, in Fayette and Westmoreland Counties, PA.

CSX and W&LE certify that: (1) No local traffic has moved over the line for at least 2 years; (2) any overhead traffic on the line can be rerouted; (3) no formal complaint filed by a user of rail service on the line (or by a State or local government entity acting on behalf of such user) regarding cessation of service over the line either is pending with the Commission or with any U.S. District Court or has been decided in complainant's favor within the last 2 years; and (4) the requirements at 49 CFR 1105.7 (environmental report), 49 CFR 1105.8 (historic report), 49 CFR 1105.11 and 1152.50(d)(1) (notice to government agencies), and 49 CFR 1105.12 (newspaper publication) have been met.

As a condition to this exemption, any employee adversely affected by the abandonment shall be protected under *Oregon Short Line R. Co.—Abandonment—Goshen*, 360 I.C.C. 91 (1979). To address whether employees are adequately protected, a petition for partial revocation under 49 U.S.C. 10505(d) must be filed.

This exemption will be effective November 20, 1994, unless stayed or a statement of intent to file an offer of financial assistance (OFA) is filed. Petitions to stay that do not involve environmental issues,[1] statements of intent to file an OFA under 49 CFR 1152.27(c)(2),[2] and trail use/rail banking requests under 49 CFR 1152.29[3] must be filed by October 31, 1994. Petitions to reopen or requests for public use conditions under 49 CFR 1152.28 must be filed by November 10, 1994. An original and 10 copies of any such filing must be sent to the Office of the Secretary, Case Control Branch, Interstate Commerce Commission, Washington, DC 20423. In addition, one copy must be served on Charles M. Rosenberger, CSX Transportation, Inc., 500 Water St., J150, Jacksonville, FL 32202, and William A. Callison, The Wheeling & Lake Erie Railway Company, 100 East First St., Brewster, OH 44613.

If the verified notice contains false or misleading information, the exemption is void *ab initio*.

CSXT and W&LE has filed an environmental report which addresses the abandonment's and discontinuance's effects, if any, on the environment and historic resources. The Commission's Section of Environmental Analysis (SEA) will issue an environmental assessment (EA) by October 26, 1994. A copy of the EA may be obtained by writing to SEA (Room 3219, Interstate Commerce Commission, Washington, DC 20423) or by calling Elaine Kaiser at (202) 9276248. Comments on environmental and

---

[1] Under 49 CFR 1150.32(b), an exemption does not become effective until 7 days after the notice is filed. Here, the notice of exemption was not filed until October 4, 1994, and thus the exemption was not effective until October 11, 1994. Petitioner's representative has confirmed that the correct consummation date is on or after October 11, 1994.

[1] The Commission will grant a stay if an informed decision on environmental issues (whether raised by a party or by the Commission in its independent investigation) cannot be made before the exemption's effective date. See Exemption of Out-of-Service Rail Lines, 5 I.C.C.2d 377 (1989). Any request for a stay should be filed as soon as possible so that the Commission may take appropriate action before the exemption's effective date.

[2] See Exempt. of Rail Abandonment—Offers of Finan. Assist., 4 I.C.C.2d 164 (1987).

[3] The Commission will accept late-filed trail use requests so long as the abandonment has not been consummated and the abandoning railroad is willing to negotiate an agreement.

historic preservation matters must be filed within 15 days after the EA becomes available to the public.

Environmental, historic preservation, public use, or trail use/rail banking conditions will be imposed, where appropriate, in a subsequent decision.

Decided: October 14, 1994.

By the Commission, David M. Konschnik, Director, Office of Proceedings.

Vernon A. Williams,

Acting Secretary.

[FR Doc. 94–26154 Filed 10–20–94; 8:45 am]

BILLING CODE 7035–01–P

DEPARTMENT OF JUSTICE

Information Collections Under Review

The Office of Management and Budget (OMB) has been sent the following collection(s) of information proposals for review under the provisions of the Paperwork Reduction Act (44 USC chapter 35) and the Paperwork Reduction Reauthorization Act since the last list was published. Entries are grouped into submission categories, with each entry containing the following information:

(1) The title of the form/collection;

(2) The agency form number, if any, and the applicable component of the Department sponsoring the collection;

(3) How often the form must be filled out or the information is collected;

(4) Who will be asked or required to respond, as well as a brief abstract;

(5) An estimate of the total number of respondents and the amount of time estimated for an average respondent to respond;

(6) An estimate of the total public burden (in hours) associated with the collection; and,

(7) An indication as to whether Section 3504(h) of Public Law 96–511 applies.

Comments and/or suggestions regarding the item(s) contained in this notice, especially regarding the estimated public burden and associated response time, should be directed to the OMB reviewer, Mr. Jeff Hill on (202) 395–7340 and to the Department of Justice's Clearance Officer, Mr. Robert B. Briggs, on (202) 514–4319. If you anticipate commenting on a form/collection, but find that time to prepare such comments will prevent you from prompt submission, you should notify the OMB reviewer and the Department of Justice Clearance Officer of your intent as soon as possible. Written comments regarding the burden estimate or any other aspect of the collection may be submitted to Office of Information and Regulatory Affairs, Office of Management and Budget, Washington, DC 20503, and to Mr. Robert B. Briggs, Department of Justice Clearance Officer, Systems Policy Staff/Information Resources Management/Justice Management Division, Suite 850, WCTR, Washington, DC 20530.

Extension of the Expiration Date of a Currently Approved Collection Without Any Change in the Substance or in the Method of Collection

(1) Dissemination Report (Transmittal of Political Propaganda)

(2) Form CRM–159. Criminal Division.

(3) On occasion.

(4) Individuals or households, businesses or other for profit, non-profit institutions, small businesses or organizations. Form CRM–159 is used by registrant to record dissemination of political propaganda within 48 hours of initial dissemination under the provisions of 22 U.S.C. 611 *et seq.*

(5) 3,600 annual respondents at .5 hours per response.

(6) 1,800 annual burden hours.

(7) Not applicable under Section 3504(h) of Public Law 96–511.

Public comment on this item is encouraged.

Dated: October 17, 1994.

Robert B. Briggs,

Department Clearance Officer, Department of Justice.

[FR Doc. 94–26110 Filed 10–20–94; 8:45 am]

BILLING CODE 4410–14–M

Information Collections Under Review

The Office of Management and Budget (OMB) has been sent the following collection(s) of information proposals for review under the provisions of the Paperwork Reduction Act (44 USC chapter 35) and the Paperwork Reduction Reauthorization Act since the last list was published. Entries are grouped into submission categories, with each entry containing the following information:

(1) The title of the form/collection;

(2) The agency form number, if any, and the applicable component of the Department sponsoring the collection;

(3) How often the form must be filled out or the information is collected;

(4) Who will be asked or required to respond, as well as a brief abstract;

(5) An estimate of the total number of respondents and the amount of time estimated for an average respondent to respond;

(6) An estimate of the total public burden (in hours) associated with the collection; and,

(7) An indication as to whether Section 3504(h) of Public Law 96–511 applies.

Comments and/or suggestions regarding the item(s) contained in this notice, especially regarding the estimated public burden and associated response time, should be directed to the OMB reviewer, Mr. Jeff Hill on (202) 395–7340 and to the Department of Justice's Clearance Officer, Mr. Robert B. Briggs, on (202) 514–4319. If you anticipate commenting on a form/collection, but find that time to prepare such comments will prevent you from prompt submission, you should notify the OMB reviewer and the Department of Justice Clearance Officer of your intent as soon as possible. Written comments regarding the burden estimate or any other aspect of the collection may be submitted to Office of Information and Regulatory Affairs, Office of Management and Budget, Washington, DC 20503, and to Mr. Robert B. Briggs, Department of Justice Clearance Officer, Systems Policy Staff/Information Resources Management/Justice Management Division, Suite 850, WCTR, Washington, DC 20530.

Extension of the Expiration Date of a Currently Approved Collection Without Any Change in the Substance or in the Method of Collection

(1) Amendment to Registration or Supplemental Registration Reports (Foreign Agents).

(2) Form CRM–158. Criminal Division.

(3) On occasion.

(4) Individuals or households, businesses or other for profit, non-profit institutions, small businesses or organizations. Form CRM–158 is used in registration of foreign agents when changes are required under provisions of 22 U.S.C. 611 *et seq.*

(5) 200 annual respondents at 1.5 hours per response.

(6) 300 annual burden hours.

(7) Not applicable under Section 3504(h) of Public Law 96–511.

Public comment on this item is encouraged.

Dated: October 17, 1994.

Robert B. Briggs,

Department Clearance Officer, Department of Justice.

[FR Doc. 94–26109 Filed 10–20–94; 8:45 am]

BILLING CODE 4410–14–M

Information Collections Under Review

The Office of Management and Budget (OMB) has been sent the following collection(s) of information proposals for review under the provisions of the

Paperwork Reduction Act (44 USC chapter 35) and the Paperwork Reduction Reauthorization Act since the last list was published. Entries are grouped into submission categories, with each entry containing the following information:

(1) The title of the form/collection;

(2) The agency form number, if any, and the applicable component of the Department sponsoring the collection;

(3) How often the form must be filled out or the information is collected;

(4) Who will be asked or required to respond, as well as a brief abstract;

(5) An estimate of the total number of respondents and the amount of time estimated for an average respondent to respond;

(6) An estimate of the total public burden (in hours) associated with the collection; and,

(7) An indication as to whether Section 3504(h) of Public Law 96–511 applies.

Comments and/or suggestions regarding the item(s) contained in this notice, espcially regarding the estimated public burden and associated response time, should be directed to the OMB reviewer, Mr. Jeff Hill on (202) 395–7340 and to the Department of Justice's Clearance Officer, Mr. Robert B. Briggs, on (202) 514–4319. If you anticipate commenting on a form/collection, but find that time to prepare such comments will prevent you from prompt submission, you should notify the OMB reviewer and the Department of Justice Clearance Officer of your intent as soon as possible. Written comments regarding the burden estimate or any other aspect of the collection may be submitted to Office of Information and Regulatory Affairs, Office of Management and Budget, Washington, DC 20503, and to Mr. Robert B. Briggs, Department of Justice Clearance Officer, Systems Policy Staff/Information Resources Management/Justice Management Division, Suite 850, WCTR, Washington, DC 20530.

Extension of the Expiration Date of a Currently Approved Collection Without Any Change in the Substance or in the Method of Collection

(1) Exhibit A to Registration Statement of Individuals (Foreign Agents).

(2) Form CRM–157. Criminal Division.

(3) On occasion.

(4) Individuals or households, businesses or other for profit, non-profit institutions, small businesses or organizations. Form CRM–157 is used to register foreign agents as required by 22 U.S.C. 611 *et seq.*, and must be utilized within ten days of date contract is made or when initial activity occurs, whichever is first.

(5) 75 annual respondents at .49 hours per response.

(6) 38 annual burden hours.

(7) Not applicable under Section 3504(h) of Public Law 96–511.

Public comment on this item is encouraged.

Dated: October 17, 1994.

Robert B. Briggs,

Department Clearance Officer, Department of Justice.

[FR Doc. 94–26108 Filed 10–20–94; 8:45 am]

BILLING CODE 4410–14–M

Information Collections Under Review

The Office of Management and Budget (OMB) has been sent the following collection(s) of information proposals for review under the provisions of the Paperwork Reduction Act (44 USC chapter 35) and the Paperwork Reduction Reauthorization Act since the last list was published. Entries are grouped into submission categories, with each entry containing the following information:

(1) The title of the form/collection;

(2) The agency form number, if any, and the applicable component of the Department sponsoring the collection;

(3) How often the form must be filled out or the information is collected;

(4) Who will be asked or required to respond, as well as a brief abstract;

(5) An estimate of the total number of respondents and the amount of time estimated for an average respondent to respond;

(6) An estimate of the total public burden (in hours) associated with the collection; and,

(7) An indication as to whether Section 3504(h) of Public Law 96–511 applies.

Comments and/or suggestions regarding the item(s) contained in this notice, especially regarding the estimated public burden and associated response time, should be directed to the OMB reviewer, Mr. Jeff Hill on (202) 395–7340 and to the Department of Justice's Clearance Officer, Mr. Robert B. Briggs, on (202) 514–4319. If you anticipate commenting on a form/collection, but find that time to prepare such comments will prevent you from prompt submission, you should notify the OMB reviewer and the Department of Justice Clearance Officer of your intent as soon as possible. Written comments regarding the burden estimate or any other aspect of the collection may be submitted to Office of Information and Regulatory Affairs, Office of Management and Budget, Washington, DC 20503, and to Mr. Robert B. Briggs, Department of Justice Clearance Officer, Systems Policy Staff/Information Resources Management/Justice Management Division, Suite 850, WCTR, Washington, DC 20530.

Extension of the Expiration Date of a Currently Approved Collection Without Any Change in the Substance or in the Method of Collection

(1) Registration Statement of Individuals (Foreign Agents).

(2) Form CRM–153. Criminal Division.

(3) On Occasion.

(4) Individuals or households, businesses or other for profit, non-profit institutions, small businesses or organizations. Form CRM–153 contains registration statement and information used for registering foreign agents under 22 U.S.C. 611 *et seq.*

(5) 100 annual respondents at 1.5 hours per response.

(6) 150 annual burden hours.

(7) Not applicable under Section 3504(h) of Public Law 96–511.

Public comment on this item is encouraged.

Dated: October 17, 1994.

Robert B. Briggs,

Department Clearance Officer, Department of Justice.

[FR Doc. 94–26104 Filed 10–20–94; 8:45 am]

BILLING CODE 4410–14–M

Information Collections Under Review

The Office of Management and Budget (OMB) has been sent the following collection(s) of information proposals for review under the provisions of the Paperwork Reduction Act (44 USC chapter 35) and the Paperwork Reduction Reauthorization Act since the last list was published. Entries are grouped into submission categories, with each entry containing the following information:

(1) The title of the form/collection;

(2) The agency form number, if any, and the applicable component of the Department sponsoring the collection;

(3) How often the form must be filled out or the information is collected;

(4) Who will be asked or required to respond, as well as a brief abstract;

I11(5) An estimate of the total number of respondents and the amount of time estimated for an average respondent to respond;

(6) An estimate of the total public burden (in hours) associated with the collection; and,

(7) An indication as to whether Section 3504(h) of Public Law 96–511 applies.

Comments and/or suggestions regarding the item(s) contained in this notice, especially regarding the estimated public burden and associated response time, should be directed to the OMB reviewer, Mr. Jeff Hill on (202) 395–7340 and to the Department of Justice's Clearance Officer, Mr. Robert B. Briggs, on (202) 514–4319. If you anticipate commenting on a form/collection, but find that time to prepare such comments will prevent you from prompt submission, you should notify the OMB reviewer and the Department of Justice Clearance Officer of your intent as soon as possible. Written comments regarding the burden estimate or any other aspect of the collection may be submitted to Office of Information and Regulatory Affairs, Office of Management and Budget, Washington, DC 20503, and to Mr. Robert B. Briggs, Department of Justice Clearance Officer, Systems Policy Staff/Information Resources Management/Justice Management Division Suite 850, WCTR, Washington, DC 20530.

Extension of the Expiration Date of a Currently Approved Collection Without Any Change in the Substance or in the Method of Collection

(1) Supplemental Registration Statement of Individuals (Foreign Agents).

(2) Form CRM–154. Criminal Division.

(3) Semi-annually.

(4) Individuals or households, Businesses or other for profit, Non-profit institutions, Small businesses or organizations. Form CRM–154 contains registration statement and information used for registering foreign agents under 22 U.S.C. 611 *et seq.*

(5) 2,400 annual respondents at 1.375 hours per response.

(6) 3,300 annual burden hours.

(7) Not applicable under Section 3504(h) of Public Law 96–511.

Public comment on this item is encouraged.

Dated: October 17, 1994.

Robert B. Briggs,

Department Clearance Officer, Department of Justice.

[FR Doc. 94–26105 Filed 10–20–94; 8:45 am]

BILLING CODE 4410–14–M

Information Collections Under Review

The Office of Management and Budget (OMB) has been sent the following collection(s) of information proposals for review under the provisions of the Paperwork Reduction Act (44 USC chapter 35) and the Paperwork Reduction Reauthorization Act since the last list was published. Entries are grouped into submission categories, with each entry containing the following information:

(1) The title of the form/collection;

(2) The agency form number, if any, and the applicable component of the Department sponsoring the collection;

(3) How often the form must be filled out or the information is collected;

(4) Who will be asked or required to respond, as well as a brief abstract;

(5) An estimate of the total number of respondents and the amount of time estimated for an average respondent to respond;

(6) An estimate of the total public burden (in hours) associated with the collection; and,

(7) An indication as to whether Section 3504(h) of Public Law 96–511 applies.

Comments and/or suggestions regarding the item(s) contained in this notice, especially regarding the estimated public burden and associated response time, should be directed to the OMB reviewer, Mr. Jeff Hill on (202) 395–7340 and to the Department of Justice's Clearance Officer, Mr. Robert B. Briggs, on (202) 514–4319. If you anticipate commenting on a form/collection, but find that time to prepare such comments will prevent you from prompt submission, you should notify the OMB reviewer and the Department of Justice Clearance Officer of your intent as soon as possible. Written comments regarding the burden estimate or any other aspect of the collection may be submitted to Office of Information and Regulatory Affairs, Office of Management and Budget, Washington, DC 20503, and to Mr. Robert B. Briggs, Department of Justice Clearance Officer, Systems Policy Staff/Information Resources Management/Justice Management Division, Suite 850, WCTR, Washington, DC 20530.

Extension of the Expiration Date of a Currently Approved Collection Without Any Change in the Substance or in the Method of Collection

(1) Exhibit B to Registration Statement (Foreign Agents).

(2) Form CRM–155. Criminal Division.

(3) On occasion.

(4) Individuals or households, businesses or other for profit, non-profit institutions, small businesses or organizations. Form CRM–155 is used to augment the registration statement of foreign agents as required by the provisions of 22 U.S.C. 611 *et seq.*, within ten days of the date a contract is made or when initial activity occurs, whichever is first.

(5) 75 annual respondents at .33 hours per response.

(6) 25 annual burden hours.

(7) Not applicable under Section 3504(h) of Public Law 96–511.

Public comment on this item is encouraged.

Dated: October 17, 1994.

Robert B. Briggs,

Department Clearance Officer, Department of Justice.

[FR Doc. 94–26106 Filed 10–20–94; 8:45 am]

BILLING CODE 4410–14–M

Information Collections Under Review

The Office of Management and Budget (OMB) has been sent the following collection(s) of information proposals for review under the provisions of the Paperwork Reduction Act (44 USC chapter 35) and the Paperwork Reduction Reauthorization Act since the last list was published. Entries are grouped into submission categories, with each entry containing the following information:

(1) The title of the form/collection;

(2) The agency form number, if any, and the applicable component of the Department sponsoring the collection;

(3) How often the form must be filled out or the information is collected;

(4) Who will be asked or required to respond, as well as a brief abstract;

(5) An estimate of the total number of respondents and the amount of time estimated for an average respondent to respond;

(6) An estimate of the total public burden (in hours) associated with the collection; and,

(7) An indication as to whether Section 3504(h) of Public Law 96–511 applies.

Comments and/or suggestions regarding the item(s) contained in this notice, especially regarding the estimated public burden and associated response time, should be directed to the OMB reviewer, Mr. Jeff Hill on (202) 395–7340 and to the Department of Justice's Clearance Officer, Mr. Robert B. Briggs, on (202) 514–4319. If you anticipate commenting on a form/collection, but find that time to prepare such comments will prevent you from prompt submission, you should notify the OMB reviewer and the Department of Justice Clearance Officer of your intent as soon as possible. Written comments regarding the burden estimate or any other aspect of the collection may be submitted to Office of Information and Regulatory Affairs, Office of Management and Budget, Washington, DC 20503, and to Mr. Robert B. Briggs, Department of Justice

Clearance Officer, Systems Policy Staff/ Information Resources Management/ Justice Management Division Suite 850, WCTR, Washington, DC 20530.

Extension of the Expiration Date of a Currently Approved Collection Without Any Change in the Substance or in the Method of Collection

(1) Short-Form Registration Statement of Individuals (Foreign Agents).

(2) Form CRM–156. Criminal Division.

(3) On occasion.

(4) Individuals or households, businesses or other for profit, non-profit institutions, small businesses or organizations. Form CRM–156 is used to register foreign agents as required by 22 U.S.C. 611 *et seq.*

(5) 350 annual respondents at .429 hours per response.

(6) 150 annual burden hours.

(7) Not applicable under Section 3504(h) of Public Law 96–511.

Dated: October 17, 1994.

Robert B. Briggs,

Department Clearance Officer, Department of Justice.

[FR Doc. 94–26107 Filed 10–20–94; 8:45 am]

BILLING CODE 4410–14–M

Drug Enforcement Administration

Alvin A. Chester, M.D.; Revocation of Registration

On March 11, 1994, the Deputy Assistant Administrator, Office of Diversion Control, Drug Enforcement Administration (DEA), issued an Order to Show Cause to Alvin A. Chester, M.D., of Albuquerque, New Mexico, proposing to revoke his DEA Certificate of Registration, AC3247738, and to deny any pending applications for registration as a practitioner. 21 U.S.C. 823(f) (1992). The basis for the Order to Show Cause was that Dr. Chester lacked authority to handle controlled substances in the State of New Mexico, 21 U.S.C. 824(a)(3), and that his continued registration would be inconsistent with the public interest, as the term is used in 21 U.S.C. 823(f) and 824(a)(4).

The Order to Show Cause was sent to Dr. Chester's registered location in Albuquerque, New Mexico by registered mail on March 11, 1994, and a signed receipt was returned to DEA indicating a delivery date of March 19, 1994. More than thirty days have passed since the Order to Show Cause was delivered to Dr. Chester's registered address. The DEA has received no response from Dr. Chester or anyone purporting to represent him. Therefore, pursuant to 21 CFR 1301.54(d), the Deputy Administrator finds that Dr. Chester has waived his opportunity for a hearing on the issues raised by the Order to Show Cause. The Deputy Administrator has carefully considered the investigative file in this matter and enters his final order based on the provisions of 21 CFR 1301.54(e) and 1301.57.

The Deputy Administrator finds that on December 2, 1992, the New Mexico Board of Medical Examiners (Medical Board) revoked Dr. Chester's medical license. The Medical Board found that Dr. Chester had committed fraud or misrepresentation in applying for and procuring a license to practice medicine in the State of New Mexico in that he failed to disclose a prior conviction by military court-martial. The Medical Board also found that he had engaged in grossly negligent practice of medicine and unwise and injudicious prescribing practices, both of which included inappropriate use of Schedule II and IV controlled substances. The Medical Board concluded that the cumulative pattern of Dr. Chester's medical practice demonstrated his incapacity or incompetence to practice medicine. On June 8, 1993, the New Mexico Board of Pharmacy (Pharmacy Board) revoked Dr. Chester's controlled substance registration because the Medical Board had revoked his practitioner's license and because he had failed to notify the Pharmacy Board of that action.

The Deputy Administrator has consistently held that DEA cannot maintain the registration of a practitioner who is without State authority to handle controlled substances. *Nathaniel S. Lehrman, M.D.*, 59 FR 44780 (1994) and *Franz A. Arakaky, M.D.*, 59 FR 42074 (1994); *see also Elliot Monroe, M.D.*, 57 FR 23246 (1992) and *Bobby Watts, M.D.*, 53 FR 11920 (1987). Dr. Chester is not authorized to administer, dispense, prescribe, or otherwise handle controlled substances in the State of New Mexico wherein he is registered with the DEA. In light of this, the Deputy Administrator concludes that it is not necessary to address whether Dr. Chester's continued registration is otherwise consistent with the public interest.

Based on the foregoing, the Deputy Administrator of the Drug Enforcement Administration concludes that Dr. Chester's DEA registration must be revoked. 21 U.S.C. 824(a)(3). Accordingly, the Deputy Administrator of the Drug Enforcement Administration, pursuant to the authority vested in him by 21 U.S.C. 823 and 824 and 28 CFR 0.100(b) and 0.104 (59 FR 23637), hereby orders that DEA Certificate of Registration AC3247738, previously issued to Alvin A. Chester, M.D., be, and it hereby is, revoked, and that any pending applications for the renewal of such registration, be, and they hereby are, denied. This order is effective on October 21, 1994.

Dated: October 14, 1994.

Stephen H. Greene,

Deputy Administrator.

[FR Doc. 94–26088 Filed 10–20–94; 8:45 am]

BILLING CODE 4410–09–M

DEPARTMENT OF LABOR

Employment and Training Administration

Investigations Regarding Certifications of Eligibility to Apply for Worker Adjustment Assistance

Petitions have been filed with the Secretary of Labor under Section 221(a) of the Trade Act of 1974 ("the Act") and are identified in the Appendix to this notice. Upon receipt of these petitions, the Director of the Office of Trade Adjustment Assistance, Employment and Training Administration, has instituted investigations pursuant to Section 221(a) of the Act.

The purpose of each of the investigations is to determine whether the workers are eligible to apply for adjustment assistance under Title II, Chapter 2, of the Act. The investigations will further relate, as appropriate, to the determination of the date on which total or partial separations began or threatened to begin and the subdivision of the firm involved.

The petitioners or any other persons showing a substantial interest in the subject matter of the investigations may request a public hearing, provided such request is filed in writing with the Director, Office of Trade Adjustment Assistance, at the address show below, not later than October 31, 1994.

Interested persons are invited to submit written comments regarding the subject matter of the investigations to the Director, Office of Trade Adjustment Assistance, at the address shown below, not later than October 31, 1994.

The petitions filed in this case are available for inspection at the Office of the Director, Office of Trade Adjustment Assistance, Employment and Training Administration, U.S. Department of Labor, 200 Constitution Avenue NW., Washington, D.C. 20210.

Signed at Washington, D.C. this 3rd day of October, 1994.

Victor J. Trunzo,

Program Manager, Policy & Reemployment Services, Office of Trade Adjustment Assistance.

APPENDIX

Petitioner: Union/worker/firm—	Location	Date received	Date of petition	Petition No.	Articles produced
BASF Corp (Wkrs)	Lowland, TN	10/03/94	09/19/94	30,360	Hosiery Yarn.
Wailuku Agribusiness Co (ILWU)	Wailuku, HI	10/03/94	09/14/94	30,361	Pineapple.
Van Heusen Warehouse (Wrks)	West Hazleton, PA	10/03/94	09/21/94	30,362	Warehouse.
Teledyne Pines Division (Wkrs)	Aurora, IL	10/03/94	09/12/94	30,363	Machine Tools
Coordinated Apparel Group (Wkrs)	Orwigsburg, PA	10/03/94	09/20/94	30,364	Knitted Shirts.
MagneTek. Inc (Wkrs)	Kokomo, IN	10/03/94	09/19/94	30,365	Electric Motors.
H&R Blocks (Co)	Forks, WA	10/03/94	09/20/94	30,366	Red Shakes and Shingles.
National Medical Care (Wkrs)	McAllen, TX	10/03/94	09/19/94	30,367	Midical Dialysis Products.
Lyon Fashion, Inc (Wkrs)	Mifflintown, PA	10/03/94	09/19/94	30,368	Ladies' Dresses.
Lyon Fashion, Inc (Wkrs)	McAlisterville, PA	10/03/94	09/19/94	30,369	Ladies' Dresses.
Leader Dye and Finishing (ACTWU)	Paterson, NJ	10/03/94	08/01/94	30,370	Dye & Finishing Services.
Finch Mfg (Wkrs)	West Pittston, PA	10/03/94	09/16/94	30,371	Rotary Processing Equipment.
Excelled Sheepskin & Leather Coat (Wkrs).	Edison, NJ	10/03/94	09/20/94	30,372	Sheepskin & Leather Coats.
Sung Sportswear, Inc (Wkrs)	Stroudsburg, PA	10/03/94	09/01/94	30,373	Ladies' Blouses.
Square D Corp—Group Schneider (IBEW).	Milwaukee, WI	10/03/94	09/21/94	30,374	Low Voltage Transformers.
London Fog Industries (Wkrs)	Eldersburg, MD	10/03/94	09/23/94	30,375	Ladies' & Men's Rainwear & Outerwear.
H. L. Miller & Son, Inc (Co)	Iola, KS	10/03/94	09/21/94	30,376	Ladies' Dresses.
Europa Fashions, Inc (ILGWU)	Garfield, NJ	10/03/94	09/15/94	30,377	Ladies' Jackets.
Texaco Exploration & Production (Wkrs).	Tulsa, OK	10/03/94	09/22/94	30,378	Oil and Gas.
London Fog Industries (Wkrs)	Williamsport, MD	10/03/94	09/23/94	30,379	Ladies' & Men's Rainwear & Outerwear.

[FR Doc. 94–26176 Filed 10–20–94; 8:45 am]

BILLING CODE 4510–30–M

[TA–W–29,965]

Benicia Industries, Inc., Benicia, CA; Notice of Negative Determination Regarding Application for Reconsideration

By an application dated August 23, 1994, Lodge #1173 of the Automotive Machinists Union (IAM) requested administrative reconsideration of the subject petition for trade adjustment assistance. The denial notice was signed on July 28, 1994 and published in the **Federal Register** on August 15, 1994 (59 FR 41792).

Pursuant to 29 CFR 90.18(c) reconsideration may be granted under the following circumstances:

(1) If it appears on the basis of facts not previously considered that the determination complained of was erroneous;

(2) If it appears that the determination complained of was based on a mistake in the determination of facts not previously considered; or

(3) If in the opinion of the Certifying Officer, a misinterpretation of facts or of the law justified reconsideration of the decision.

The findings show that the workers are engaged in predelivery services for imported Mazda automobiles prior to transfering these vehicles to automotive dealershps. Installing components—radios, bumpers, emblems and performing repairs on imported automobiles would not provide a basis for a worker group certification.

The dominant cause for the layoffs at Benicia was a corporate decision to eliminate the Benicia facility and perform the predelivery services at two other west coast ports. Worker separations resulting from a domestic transfer of activity would not provide a basis for a worker group certification.

Conclusion

After review of the application and investigative findings, I conclude that there has been no error or misinterpretation of the law or of the facts which would justify reconsideration of the Department of Labor's prior decision. Accordingly, the application is denied.

Signed at Washington, D.C., this 11th day of October 1994.

Victor J. Trunzo,

Program Manager, Policy and Reemployment Services, Office of Trade Adjustment Assistance.

[FR Doc. 94–26174 Filed 10–20–94; 8:45 am]

BILLING CODE 4510–30–M

[TA–W–29,763]

General Electric Company Aircraft Engine Division, Lynn, MA; Notice of Negative Determination Regarding Application for Reconsideration

By an application dated August 30, 1994, Local #201 of the International Union of Electrical Workers (IUE) requested administrative reconsideration of the subject petition for trade adjustment assistance, TAA. The denial notice was published in the **Federal Register** on August 15, 1994 (59 FR 41792).

Pursuant to 29 CFR 90.18(c) reconsideration may be granted under the following circumstances:

(1) If it appears on the basis of facts not previously considered that the determination complained of was erroneous;

(2) If it appears that the determination complained of was based on a mistake in the determination of facts not previously considered; or

(3) If in the opinion of the Certifying Officer, a misinterpretation of facts or of the law justified reconsideration of the decision.

Investigation findings show that the workers produced jet aircraft engines.

The union states that although imports of jet engines did not decrease absolutely they did increase relative to domestic shipments of jet engines. The union also stated that the production of parts for its jet engines are being manufactured offshore resulting in

fewer jobs at Lynn's General Electric plant.

The dominant cause for the downsizing at Lynn was the decrease in the Federal Government's defense budget for jet engines and fewer opportunities to break into the commercial airline business. Lynn's jet engine production was 90 percent military, 10 percent commercial.

Further, less than 5 percent of the jet engine parts are outsourced overseas and this is a growing phenomenon with new orders for customers in other counties in order to sell them jet engines. The Lynn workers never produced the component parts for these new orders. Most of the outsourced component parts are not imported to the U.S.

With respect to the Department's certifications for Babco Textron (TA–W–28,716) and Walbar (TA–W–28,633) both worker groups met all the statutory criteria for a worker group certification. Both worker groups produce component parts for Lynn's GE engines. A substantial portion of their component work which was produced domestically was outsourced to firms in other countries.

Conclusion

After review of the application and investigative findings, I conclude that there has been no error or misinterpretation of the law or of the facts which would justify reconsideration of the Department of Labor's prior decision. Accordingly, the application is denied.

Signed at Washington, D.C., this 11th day of October 1994.

Victor J. Trunzo,

Program Manager, Policy and Reemployment Services, Office of Trade Adjustment Assistance.

[FR Doc. 94–26173 Filed 10–20–94; 8:45 am]

BILLING CODE 4510–30–M

Notice of Determinations Regarding Eligibility To Apply for Worker Adjustment Assistance and NAFTA Transitional Adjustment Assistance

In accordance with Section 223 of the Trade Act of 1974, as amended, the Department of Labor herein presents summaries of determinations regarding eligibility to apply for trade adjustment assistance for workers (TA-W) issued during the period of October, 1994.

In order for an affirmative determination to be made and a certification of eligibility to apply for worker adjustment assistance to be issued, each of the group eligibility requirements of Section 222 of the Act must be met.

(1) That a significant number or proportion of the workers in the workers' firm, or an appropriate subdivision thereof, have become totally or partially separated,

(2) That sales or production, or both, of the firm or subdivision have decreased absolutely, and

(3) That increases of imports of articles like or directly competitive with articles produced by the firm or appropriate subdivision have contributed importantly to the separations, or threat thereof, and to the absolute decline in sales or production.

Negative Determinations for Worker Adjustment Assistance

In each of the following cases the investigation revealed that criterion (3) has not been met. A survey of customers indicated that increased imports did not contribute importantly to worker separations at the firm.

TA–W–30,116; Miller Redwood Plywood, Grants Pass, OR

TA–W–30,006; Imperial Metal & Chemical Co., Holyoke, MA

TA–W–30,040; Panhandle Equipment Co., Pampa, TX

TA–W–30,140; A.F. Industries, Great Falls, SC

TA–W–30,183; The Benstock Co., Buffalo, NY

TA–W–30,154; Sanofi Bio Industries, Wapato, WA

TA–W–30,081; Pyle National, Inc., An Amphenol Co., Chicago, IL

TA–W–29,984; Hoffend & Sons, Inc., Honeoye, NY

TA–W–29,968; Tampella Power, Williamsport, PA

TA–W–30,215; Babcock & Wilcox Special Metals Plant, Koppel, PA

TA–W–30,212; Knight Engineering & Plastics, Inc., Warwood, WV

In the following cases, the investigation revealed that the criteria for eligibility have not been met for the reasons specified.

TA–W–30,254; Pegasus Gold Corp., Butte Exploration, Butte, MT

The workers' firm does not produce an article as required for certification under Section 222 of the Trade Act of 1974.

TA–W–30,060; Northrop Corp., Rico Rivera, CA

Increased imports did not contribute importantly to worker separations at the firm.

TA–W–29,658; Tektronix Test & Measurement Div., Beaverton, OR

Increased imports did not contribute importantly to worker separations at the firm.

TA–W–30,309; Centrilift, Claremore, OK

Increased imports did not contribute importantly to worker separations at the firm.

TA–W–30,301; Scab Rock Feeders, Inc., Othello, WA

The workers' firm does not produce an article as required for certification under Section 222 of the Trade Act of 1974.

TA–W–29,847 & TA–W–29,847A; Mosley Machinery Co., Inc., Waco, TX & Mosley Service Co., Waco, TX

Increased imports did not contribute importantly to worker separations at the firm.

TA–W–30,002; Grumman Corp., Grumman Space Station Engineering & Integration Contractor Div., Houston, TX

Increased imports did not contribute importantly to worker separations at the firm.

TA–W–30,243; Occidental Chemical Corp., Agricultural Products Group, White Springs, FL

The investigation revealed that criterion (1) has not been met. A significant number or proportion of the workers did not become totally or partially separated as required for certification.

Affirmative Determinations for Worker Adjustment Assistance

TA–W–30,229; Maui Pineapple Co., Inc., Kahului, HI

A certification was issued covering all workers separated on or after August 8, 1993.

TA–W–30,237; Cohen Brothers Dress Corp., New York, NY

A certification was issued covering all workers separated on or after August 4, 1993.

TA–W–30,275; Brown Shoe Co., Steelville, MO

A certification was issued covering all workers separated on or after August 18, 1993.

TA–W–30,078; Vygen Corp., Ashtabula, OH

A certification was issued covering all workers separated on or after June 17, 1993.

TA–W–30,115; Parker Hannifin Corp., Berea, KY

A certification was issued covering all workers separated on or after June 24, 1993.

TA–W–29,979; Xerox Corp., Office Document Products Div., Henrietta, NY

A certification was issued covering all workers separated on or after June 8, 1993.

TA-W-30,182; Exxon Co. USA, Southwestern Production Div., Midland, TX

A certification was issued covering all workers separated on or after August 8, 1993.

TA-W-30,155; Ohio Beef Corp. (Formerly Sandusky Dressed Beef), Sandusky, OH

A certification was issued covering all workers separated on or after July 21, 1993.

TA-W-30,210; Magtrol, Inc., West Seneca, NY

A certification was issued covering all workers separated on or after August 4, 1993.

TA-W-29,744; Xerox Corp., Webster, NY

A certification was issued covering all workers separated on or after March 29, 1993.

TA-W-30,205; Smith Corona Corp., Cortland, NY

A certification was issued covering all workers separated on or after September 21, 1994.

TA-W-30,174; H.H. Rosinsky & Co., Inc., Philadelphia, PA

A certification was issued covering all workers separated on or after September 29, 1993.

TA-W-30,158; Hampton Manufacturing, Inc., Meadows of Van, VA

A certification was issued covering all workers separated on or after July 14, 1993.

TA-W-30,241; Allied Signal, Inc., Danville, IL

A certification was issued covering all workers separated on or after August 10, 1993.

TA-W-30,119; Apparel Belt Resource, New York, NY

A certification was issued covering all workers separated on or after July 9, 1993.**

TA-W-30,120; Mobil Exploration & Production U.S., Inc (MEPUS)

Headquartered in Dallas, TX and:

TA-W-30,120A MEPUS, Dallas Affiliate, Headquartered in Dallas, TX & Operating at Other Sites in the Following States: B; AL, C; CA, D; CO, E; KS, F; LA, G; OK, H; TX

A certification was issued covering all workers separated on or after April 30, 1994.

TA-W-30,120I; MEPUS, Bakerfield Div., Headquartered in Bakersfield, CA & Operating at Other Sites in The Following States: J; CA, K; CO, L; TX, M; WY

A certification was issued covering all workers separated on or after April 30, 1994.

TA-W-30,120N; MEPUS, Houston Div., Headquartered in Houston, TX & Operating at Other Sites in the Following States: O; CA, P; LA, Q; NM, R; OK, S; TX

A certification was issued covering all workers separated on or after April 30, 1994.

TA-W-30,120T; MEPUS, Liberal Div., Headquartered in Liberal, KS & Operating at Other Sites in The Following States: U; CO, V; KS, W; OK

A certification was issued covering all workers separated on or after April 30, 1994.

TA-W-30,120; MEPUS, Midland Div., Headquartered in Midland TX & Operating at Sites in the Following States: Y; CO, Z; NM, AA; TX, BB; UT

A certification was issued covering all workers separated on or after April 30, 1994.

TA-W-30,120CC; MEPUS, New Orleans Div., Headquartered in New Orleans, LA & Operating at Other Sites in The Following States: DD; AL, EE; AR, FF; FL, GG; GA, HH; LA, II, MS, JJ; NM, KK, OK, LL; TX

A certification was issued covering all workers separated on or after April 30, 1994.

TA-W-30,121; Mobil Exploration and Producting Services, Inc (MEPSI), Headquartered in Dallas, TX & Operating at Other Sites in The Following States: A; CA, B; CO, C; FL, D; IA, E; KS, F; KY, G; LA, H; MO, I; MS, J; MT, K; NM, L; OK, M; TN, N; TX, O; UT, P; WA, Q; WY

A certification was issued covering all workers separated on or after April 30, 1994.

TA-W-30,122; Mobil Exploration and Producing Technical Center (MEPTEC), Headquartered in Dallas, TX & Operating at Other Sites in The Following States: A; CA, B; CO, C; KS, D; LA, E; TX.

A certification was issued covering all workers separated on or after April 30, 1994.

Also, pursuant to Title V of the North American Free Trade Agreement Implementation Act (Pub. L. 103-182) concerning transitional adjustment assistance hereinafter called (NAFTA-TAA) and in accordance with Section 250(a) Subchapter D, Chapter 2, Title II, of the Trade Act as amended, the Department of Labor presents summaries of determinations regarding eligibility to apply for NAFTA-TAA issued during the month of October 1994.

In order for an affirmative determination to be made and a certification of eligibility to apply for NAFTA-TAA the following group eligibility requirements of Section 250 of the Trade Act must be met:

(1) That a significant number or proportion of the workers in the workers' firm, or an appropriate subdivision thereof, (including workers in any agricultural firm or appropriate subdivision thereof) have become totally or partially separated from employment and either—

(A) That sales or production, or both, of such firm or subdivision have decreased absolutely;

(B) That imports from Mexico or Canada of articles like or directly competitive with articles produced by such firm or subdivision have increased;

(C) That the increase in imports contributed importantly to such workers' separations or threat of separation and to the decline in sales or production of such firm or subdivision; or

(2) That there has been a shift in production by such workers' firm or subdivision to Mexico or Canada of articles like or directly competitive with articles which are produced by the firm or subdivision.

Negative Determinations NAFTA-TAA

NAFTA-TAA-00216; ACE Radio Control, Inc., Higginsville, MO

The investigation revealed that criteria (3) and criteria (4) were not met. A survey of major customers that decreased their purchases from ACE Radio Control, Inc. revealed that most of the respondents did not purchase any imported airplane kits or battery cyclers from Mexico or Canada during the periods under investigation.

NAFTA-TAA-00219; Ward Paper Co., A Division of International Paper, Merrill, WI

The investigation revealed that criteria (3) and criteria (4) were not met. A survey of major customers that decreased their purchases from Ward Paper Co revealed that most of the respondents did not purchase any imported firm writing papers from Mexico or Canada. Respondents which did purchased fine writing papers from Mexico or Canada relied on imports for a minor proportion of their needs during the periods under investigation.

NAFTA-TAA-00212; Cohen Brothers Dress Corp., New York, NY

The investigation revealed that criteria (3) and criteria (4) were not met.

A survey of major customers that decreased their purchases from Cohen Brothers Dress Corporation revealed that most of the respondents did not purchase women's dresses from Mexico or Canada. Respondents which did purchased women's dresses from Mexico or Canada relied on imports for a minor proportion of their needs during the periods under investigation.

NAFTA–TAA–00214; Calvin Clothing Co., A Division of Palm Beach Co., Inc., New Bedford, MA

The investigation revealed that criteria (3) and criteria (4) were not met. A survey of major customers that decreased their purchases from Calvin Clothing Company revealed that most of the respondents did not increase imports of men's and boys' suitcoats & sports coats from Mexico or Canada. Respondents which did purchase men's & boys' suitcoats & sports coats from Mexico or Canada relied on imports for a minor proportion of their needs during the periods under investigation.

NAFTA–TAA–00215; Beth Energy Mines, Inc., Cambria Slope Mine No. 33, Ebensburg, PA

The investigation revealed that criteria (3) and criteria (4) were not met. A survey of major customers that decreased their purchases from the Cambria Slope Mine No. 33 of Beth Energy Mines, Inc. revealed that most of the respondents did not purchase any imported bituminous coal from Mexico or Canada during the periods under investigation.

NAFTA–TAA–00221; Mascotech, Inc., Industrial Components Div., Mesick, MI

The investigation revealed that criteria (3) and criteria (4) were not met. The investigation revealed that the parent company has made a business decision to discontinue the production of fuel filler covers by the subject plant. Also, the sole customer which the subject firm supplied this product line to is a part of the export market. Lost export sales is not a basis for certification under the Trade Act of 1974.

NAFTA–TAA–00224; Scab Rock Feeders, Inc., Othello, WA

The investigation revealed that the workers of the subject firm did not produce an article within the meaning of the Act. The Department of Labor has consistently determined that the performance of services did not constitute production of an article as required by the Trade Act of 1974.

Affirmative Determinations NAFTA–TAA

NAFTA–TAA–00222; Magnetek, Owosso, MI

A certification was issued covering all workers of the Magnetek, Owosso, Michigan separated on or after December 8, 1993.

NAFTA–TAA–00220; Howell Industries, Inc., Lapeer Plant, Southfield, MI

A certification was issued covering all workers engaged in the production bracket assembly-engine mounting parts (CT–20) at Howell Industries, Inc., Lapeer Plant in Southfield, Michigan separated on or after December 8, 1993.

NAFTA–TAA–00223; McGill Electric Switch, Therm-O-Disc, Inc.,

El Paso, TX

A certification was issued covering all workers of the McGill Electric Switch of Therm-O-Disc, Inc., El Paso, TX separated on or after December 8, 1993.

NAFTA–TAA–00218; Matsushita Electric Corporation of America, Matsushita Television Company, Franklin Park, IL

A certification was issued covering all workers of Matsushita Electric Corp. of America, Franklin Park, Illinois separated on or after December 8, 1993.

I hereby certify that the aforementioned determinations were issued during the month of October, 1994. Copies of these determinations are available for inspection in Room C–4318, U.S. Department of Labor, 200 Constitution Avenue, N.W., Washington, D.C. 20210 during normal business hours or will be mailed to persons who write to the above address.

Dated: October 12, 1994.

Victor J. Trunzo,

Program Manager, Policy & Reemployment Services, Office of Trade Adjustment Assistance.

[FR Doc. 94–26172 Filed 10–20–94; 8:45 am]

BILLING CODE 4510–30–M

Investigations Regarding Certifications of Eligibility To Apply for NAFTA Transitional Adjustment Assistance

Petitions for transitional adjustment assistance under the North American Free Trade Agreement-Transitional Adjustment Assistance Implementation Act (Pub. L. 103–182), hereinafter called (NAFTA–TAA), have been filed with State Governors under section 250(a) of subchapter D, chapter 2, title II, of the Trade Act of 1974, as amended, are identified in the Appendix to this Notice. Upon notice from a Governor that a NAFTA–TAA petition has been received, the Director of the Office of Trade Adjustment Assistance (OTAA), Employment and Training Administration (ETA), Department of Labor (DOL), announces the filing of the petition and takes actions pursuant to paragraphs (c) and (e) of section 250 of the Trade Act.

The purpose of the Governor's actions and the Labor Department's investigations are to determine whether the workers separated from employment after December 8, 1993 (date of enactment of Pub. L. 103–182) are eligible to apply for NAFTA–TAA under subchapter D of the Trade Act because of increased imports from or the shift in production to Mexico or Canada.

The petitioners or any other persons showing a substantial interest in the subject matter of the investigations may request a public hearing with the Director of OTAA at the U.S. Department of Labor (DOL) in Washington, DC, provided such request is filed in writing with the Director of OTAA not later than October 31, 1994.

Also, interested persons are invited to submit written comments regarding the subject matter of the petitions to the Director of OTAA at the address shown below not later than October 31, 1994.

Petitions filed with the Governors are available for inspection at the Office of the Director, OTAA, ETA, DOL, Room C–4318, 200 Constitution Avenue, NW, Washington, DC 20210.

Signed at Washington, DC, this 11th day of October, 1994.

Victor J. Trunzo,

Program Manager, Policy & Reemployment Services, Office of Trade Adjustment Assistance.

Appendix

Petitioner: Union/workers/firm	Location	Date received at governors' office	Petition No.	Articles produced
Bluestone Farming, Inc. (UFW)	San Diego, CA	09/06/94	NAFTA—00230	Table grapes.

Petitioner: Union/workers/firm	Location	Date received at governors' office	Petition No.	Articles produced
American Metal Products; A Masco Corp. (SMW).	City of Commerce, CA.	09/12/94	NAFTA—00231	Sheet metal products: heating, air conditioning, ventilation.
National Medical Care; Medical Products Division (Wkrs).	McAllen, TX	09/12/94	NAFTA—00232	Bloodlines for dialysis machines.
GATX Logistics, Inc.; Boston Operations (Co.).	Mansfield, MA	09/14/94	NAFTA—00233	Distribution services.
Safeway, Inc.; Northern California (Wkrs)	Fremont, CA	09/14/94	NAFTA—00234	Management of computer processing and application rollout.
Stapleton Garment; Thompson Plant (Wkrs).	Stapleton, GA	09/14/94	NAFTA—00235	Ladies clothing; shorts, slacks, coveralls.
Oxford Industries, Inc.; Oxford of Lincolnton (Co.).	Lincolnton, GA	09/19/94	NAFTA—00236	Ladies apparel; dresses, capes, blazers, jacket dresses.
Allied Signal; Engine Mats Sector (ICWU)	Danville, IL	09/16/94	NAFTA—00237	Refrigerant (CFC) #11 and #12.
Aileen, Inc.; Victoria & Flint Hill Plants (Wkrs).	Edinburg, VA	09/15/94	NAFTA—00238	Women's apparel; sportswear, knit tops, jackets, skirts, pants, shorts.
Ball Glass Container (GMP)	Okmulgee, OK	09/21/94	NAFTA—00239	Glass containers.
Lyon Fashion, Inc. (Wkrs)	Mifflintown, PA	09/23/94	NAFTA—00240	Ladies dresses.
BASF Corporation Lowland Plant; Nylon Hosiery Division (Wkrs).	Lowland, TN	09/23/94	NAFTA—00241	SD high torque monosheer hosiery yarn.
Square D Corporation—Group Schneider; Transformer Business (IBEW).	Milwaukee, WI	09/26/94	NAFTA—00242	Low voltage transformers.
Keyes Fibre Company; Hammond Plant (UPW).	Hammond, IN	09/26/94	NAFTA—00243	Rough molded paper products; carrytrays & fast food cupholders.
Midland Brake Cuba; ABSCO (Wkrs)	Cuba, MO	09/26/94	NAFTA—00244	Brake shoes for automotives & Tractor trailers.
Coombs Vermont Natural Products (Wkrs)	Wilmington, VT	09/27/94	NAFTA—00245	Maple syrup.
Hamilton Kent Manufacturing Co., Inc.; Division of British Tire & Rubber (URW).	Kent, OH	09/28/94	NAFTA—00246	Extruded & custom molded rubber products; plastc pipe manufacturers.
Oxford Industries, Inc.; Lanier Clothes Division (Co.).	Atlanta, GA	09/29/94	NAFTA—00247	Mens suitcoats & sportscoats.
Magne Tek Inc.; Kokomo (Wkrs)	Kokomo, IN	09/29/94	NAFTA—00248	Converters for RV's.
Stueben Foods; Elma (Wkrs)	Elma, NY	09/28/94	NAFTA—00249	Pudding.
North American Lighting; Philips Lighting—Richmond (IBEW).	Richmond, KY	09/29/94	NAFTA—00250	Miniature & halogen lightbulbs.
Leviton Manufacturing; Electrical (IBEW)	Brooklyn, NY	09/30/94	NAFTA—00251	Electronic wiring devices.
Footwear Management; Tony Lama Company (Wkrs).	El Paso, TX	10/03/94	NAFTA—00252	Western boots.
Goetze Gasket Co.; McCord Payen, Inc. (Co.).	LaGrange, GA	10/03/94	NAFTA—00253	Automotive cylinder head gaskets, intake & exhaust manifold gaskets, heat shields.

[FR Doc. 94–26177 Filed 10–20–94; 8:45 am]

BILLING CODE 4510–30–M

[NAFTA—00120]

Walker Manufacturing Company Hebron, OH; Notice of Negative Determination on Reconsideration

On August 12, 1994, the Department issued an Affirmative Determination Regarding Application for Reconsideration for workers and former workers of the subject firm. This notice was published in the **Federal Register** on August 23, 1994 (59 FR 43362).

In the United Auto Workers' application for reconsideration they submitted a list of assets from the Hebron plant that have been shipped to Mexico.

The findings show that the Hebron facility will be closed by the end of 1994 and its business distributed to other corporate domestic plants. Only the production of resonator bodies was transferred to Canada; however, this accounted for only a very small portion of Hebron's total production and the workers were not separately identifiable by product.

New findings on reconsideration show that there is no production being transferred to Mexico as a result of the closure of the Hebron plant. The closing is the result of capacity issues within Walker Manufacturing in North America.

Other findings on reconsideration show that Hebron is making its machinery available to other corporate North American plants, including the one in Mexico.

Additional findings on reconsideration show that the Mexican plant produces exhaust systems only for the Mexican market. The Hebron plant produces exhaust systems only for a major original equipment manufacturer (OEM) in the United States.

The Department's survey of Hebron's customers shows that they did not decrease their purchases from Hebron and increase their imports in the relevant period.

Conclusion

After reconsideration, I affirm the original notice of negative determination of eligibility to apply for transitional adjustment assistance to workers and former workers of the Walker Manufacturing Company in Hebron, Ohio.

Signed at Washington, D.C., this 7th day of October.

Victor J. Trunzo,

Program Manager, Policy and Reemployment Services, Office of Trade Adjustment Assistance.

[FR Doc. 94–26175 Filed 10–20–94; 8:45 am]

BILLING CODE 4510–30–M

Employment Standards Administration

Wage and Hour Division

Minimum Wages for Federal and Federally Assisted Construction; General Wage Determination Decisions

General wage determination decisions of the Secretary of Labor are issued in accordance with applicable law and are based on the information obtained by the Department of Labor from its study of local wage conditions and data made available from other sources. They specify the basic hourly wage rates and fringe benefits which are determined to be prevailing for the described classes of laborers and mechanics employed on construction projects of a similar character and in the localities specified therein.

The determinations in these decisions of prevailing rates and fringe benefits have been made in accordance with 29 CFR Part 1, by authority of the Secretary of Labor pursuant to the provisions of the Davis-Bacon Act of March 3, 1931, as amended (46 Stat. 1494, as amended, 40 U.S.C. 276a) and of other Federal statutes referred to in 29 CFR Part 1, Appendix, as well as such additional statutes as may from time to time be enacted containing provisions for the payment of wages determined to be prevailing by the Secretary of Labor in accordance with the Davis-Bacon Act. The prevailing rates and fringe benefits determined in these decisions shall, in accordance with the provisions of the foregoing statutes, constitute the minimum wages payable on Federal and federally assisted construction projects to laborers and mechanics of the specified classes engaged on contract work of the character and in the localities described therein.

Good cause is hereby found for not utilizing notice and public comment procedure thereon prior to the issuance of these determinations as prescribed in 5 U.S.C. 553 and not providing for delay in the effective date as prescribed in that section, because the necessity to issue current construction industry wage determinations frequently and in large volume causes procedures to be impractical and contrary to the public interest.

General wage determination decisions, and modifications and supersedeas decisions thereto, contain no expiration dates and are effective from their date of notice in the **Federal Register**, or on the date written notice is received by the agency, whichever is earlier. These decisions are to be used in accordance with the provisions of 29 CFR Parts 1 and 5. Accordingly, the applicable decision, together with any modifications issued, must be made a part of every contract for performance of the described work within the geographic area indicated as required by an applicable Federal prevailing wage law and 29 CFR Part 5. The wage rates and fringe benefits, notice of which is published herein, and which are contained in the Government Printing Office (GPO) document entitled "General Wage Determinations Issued Under The Davis-Bacon And Related Acts," shall be the minimum paid by contractors and subcontractors to laborers and mechanics.

Any person, organization, or governmental agency having an interest in the rates determined as prevailing is encouraged to submit wage rate and fringe benefit information for consideration by the Department. Further information and self-explanatory forms for the purpose of submitting this data may be obtained by writing to the U.S. Department of Labor, Employment Standards Administration, Wage and Hour Division, Division of Wage Determinations, 200 Constitution Avenue NW., room S–3014, Washington, DC 20210.

Modification to General Wage Determinations Decisions

The number of decisions listed in the Government Printing Office document entitled "General Wage Determinations Issued Under the Davis-Bacon and Related Acts" being modified are listed by Volume and State. Dates of publication in the **Federal Register** are in parentheses following the decisions being modified.

Volume I

None

Volume II

None

Volume III

None

Volume IV

Illinois

IL940001 (Feb. 11, 1994)

Wisconsin

WI940001 (Feb. 11, 1994)
WI940002 (Feb. 11, 1994)
WI940004 (Feb. 11, 1994)
WI940005 (Feb. 11, 1994)
WI940006 (Feb. 11, 1994)
WI940007 (Feb. 11, 1994)
WI940009 (Feb. 11, 1994)
WI940011 (Feb. 11, 1994)
WI940013 (Feb. 11, 1994)
WI940014 (Feb. 11, 1994)
WI940015 (Feb. 11, 1994)
WI940016 (Feb. 11, 1994)
WI940017 (Feb. 11, 1994)
WI940018 (Feb. 11, 1994)
WI940020 (Feb. 11, 1994)
WI940021 (Feb. 11, 1994)
WI940022 (Feb. 11, 1994)
WI940024 (Feb. 11, 1994)
WI940025 (Feb. 11, 1994)
WI940026 (Feb. 11, 1994)
WI940027 (Feb. 11, 1994)
WI940028 (Feb. 11, 1994)
WI940029 (Feb. 11, 1994)
WI940030 (Feb. 11, 1994)
WI940031 (Feb. 11, 1994)
WI940032 (Feb. 11, 1994)
WI940033 (Feb. 11, 1994)
WI940034 (Feb. 11, 1994)
WI940035 (Feb. 11, 1994)

Volume V

Iowa

IA940005 (Feb. 11, 1994)
IA940009 (Feb. 11, 1994)
IA940013 (Feb. 11, 1994)
IA940016 (Feb. 11, 1994)

Kansas

KS940012 (Feb. 11, 1994)
KS940016 (Feb. 11, 1994)
KS940018 (Feb. 11, 1994)
KS940019 (Feb. 11, 1994)
KS940020 (Feb. 11, 1994)
KS940021 (Feb. 11, 1994)
KS940022 (Feb. 11, 1994)
KS940023 (Feb. 11, 1994)

New Mexico

NM940001 (Feb. 11, 1994)

Texas

TX940002 (Feb. 11, 1994)
TX940003 (Feb. 11, 1994)
TX940007 (Feb. 11, 1994)
TX940010 (Feb. 11, 1994)
TX940018 (Feb. 11, 1994)
TX940019 (Feb. 11, 1994)
TX940034 (Feb. 11, 1994)
TX940037 (Feb. 11, 1994)
TX940051 (Feb. 11, 1994)
TX940053 (Feb. 11, 1994)
TX940059 (Feb. 11, 1994)
TX940060 (Feb. 11, 1994)
TX940061 (Feb. 11, 1994)
TX940063 (Feb. 11, 1994)
TX940069 (Feb. 11, 1994)
TX940093 (Feb. 11, 1994)
TX940096 (Feb. 11, 1994)

Volume VI

Arizona

AZ940001 (Feb. 11, 1994)
AZ940002 (Feb. 11, 1994)
AZ940003 (Feb. 11, 1994)
AZ940004 (Feb. 11, 1994)
AZ940005 (Feb. 11, 1994)
AZ940006 (Feb. 11, 1994)
AZ940010 (Feb. 11, 1994)
AZ940011 (Feb. 11, 1994)
AZ940012 (Feb. 11, 1994)

AZ940013 (Feb. 11, 1994)
AZ940014 (Feb. 18, 1994)
AZ940015 (Feb. 18, 1994)
AZ940016 (Feb. 18, 1994)
AZ940017 (Feb. 11, 1994)

Colorado

CO940001 (Feb. 11, 1994)
CO940005 (Feb. 11, 1994)
CO940006 (Feb. 11, 1994)
CO940007 (Feb. 11, 1994)
CO940008 (Feb. 11, 1994)
CO940009 (Feb. 11, 1994)
CO940010 (Feb. 11, 1994)
CO940011 (Feb. 11, 1994)
CO940018 (Feb. 11, 1994)
CO940021 (Feb. 11, 1994)
CO940023 (Feb. 11, 1994)
CO940025 (Feb. 11, 1994)

Montana

MT940005 (Feb. 11, 1994)
MT940006 (Feb. 11, 1994)
MT940007 (Feb. 11, 1994)
MT940008 (Feb. 11, 1994)

Wyoming

WY940009 (Feb. 11, 1994)

General Wage Determination Publication

General wage determinations issued under the Davis-Bacon and related Acts, including those noted above, may be found in the Government Printing Office (GPO) document entitled "General Wage Determinations Issued Under the Davis-Bacon and Related Acts". This publication is available at each of the 50 Regional Government Depository Libraries and many of the 1,400 Government Depository Libraries across the county. Subscriptions may be purchased from: Superintendent of Documents, U.S. Government Printing Office, Washington, DC 20402, (202) 783–3238.

When ordering subscription(s), be sure to specify the State(s) of interest, since subscriptions may be ordered for any or all of the six separate volumes, arranged by State. Subscriptions include an annual edition (issued in January or February) which included are current general wage determinations for the States covered by each volume. Throughout the remainder of the year, regular weekly updates will be distributed to subscribers.

Signed at Washington, D.C. this 14th day of October 1994.

Alan L. Moss,

Director, Division of Wage Determination.

[FR Doc. 94–25914 Filed 10–20–94; 8:45 am]

BILLING CODE 4510–27–M

NATIONAL AERONAUTICS AND SPACE ADMINISTRATION

[Notice 94–082]

Intent To Grant a Partially Exclusive Patent License

AGENCY: National Aeronautics and Space Administration.

ACTION: Notice of Intent to Grant a Partially Exclusive Patent License.

SUMMARY: NASA hereby gives notice of intent to grant Wheel Ring, Inc. of Manchester, Connecticut, a partially exclusive, royalty-bearing, revocable license to practice the invention described and claimed in U.S. Patent No. 4,946,421 which issued August 7, 1990, and is entitled "Robot Cable-Complaint Devices." The proposed partially exclusive patent license will be for a limited number of years and will contain appropriate terms, limitations and conditions to be negotiated in accordance with the NASA Patent Licensing Regulations, 14 CFR part 1245, subpart 2. NASA will negotiate the final terms and conditions and grant the partially exclusive license, unless within 60 days of the Date of this Notice, the Director of Patent Licensing receives written objections to the grant, together with any supporting documentation. The Director of Patent Licensing will review all written objections to the grant and then recommend to the Associate General Counsel (Intellectual Property) whether to grant the partially exclusive license.

DATES: Comments to this notice must be received by December 20, 1994.

ADDRESSES: National Aeronautics and Space Administration, Code GP, Washington, DC 20546.

FOR FURTHER INFORMATION CONTACT: Mr. Harry Lupuloff, (202) 358–2041.

Dated: October 14, 1994.

Edward A. Frankle,

General Counsel.

[FR Doc. 94–26080 Filed 10–20–94; 8:45 am]

BILLING CODE 7510–01–M

[Notice 94–083]

Intent To Grant an Exclusive Patent License

AGENCY: National Aeronautics and Space Administration.

ACTION: Notice of Intent to Grant an Exclusive Patent License.

SUMMARY: NASA hereby gives notice of intent to grant Wheel Ring, Inc. of Manchester, Connecticut, an exclusive, royalty-bearing, revocable license to practice the invention described and claimed in U.S. Patent No. 5,174,590 which issued December 29, 1992, and is entitled "Compliant Walker." The proposed exclusive patent license will be for a limited number of years and will contain appropriate terms, limitations and conditions to be negotiated in accordance with the NASA Patent Licensing Regulations, 14 CFR Part 1245, Subpart 2. NASA will negotiate the final terms and conditions and grant the exclusive license, unless within 60 days of the Date of this Notice, the Director of Patent Licensing receives written objections to the grant, together with any supporting documentation. The Director of Patent Licensing will review all written objections to the grant and then recommend to the Associate General Counsel (Intellectual Property) whether to grant the exclusive license.

DATES: Comments to this notice must be received by December 20, 1994.

ADDRESSES: National Aeronautics and Space Administration, Code GP, Washington, DC 20546.

FOR FURTHER INFORMATION CONTACT: Mr. Harry Lupuloff, (202) 358–2041.

Dated: October 14, 1994.

Edward A. Frankle,

General Counsel.

[FR Doc. 94–26079 Filed 10–20–94; 8:45 am]

BILLING CODE 7510–01–M

NUCLEAR REGULATORY COMMISSION

[Docket No. 50–336]

Northeast Nuclear Energy Company (Millstone Nuclear Power Station, Unit No. 2); Exemption

I

The Northeast Nuclear Energy Company (NNECO, the licensee) is the holder of Facility Operating License No. DPR–65 which authorizes operation of Millstone Nuclear Power Station, Unit No. 2. The license provides, among other things, that Millstone Unit 2 is subject to all rules, regulations, and Orders of the Commission now or hereafter in effect.

The plant is a pressurized water reactor located at the licensee's site in New London County, Connecticut.

II

One of the conditions of all operating licenses for water-cooled power reactors, as specified in 10 CFR 50.54(o), is that primary reactor containments shall meet the containment leakage test requirements set forth in 10 CFR part

50, appendix J. More specifically the following sections require that:

10 CFR Part 50, Appendix J. Section III.D.2(a)

Type B tests, except tests for air locks, shall be performed during reactor shutdown for refueling, or other convenient intervals, but in no case at intervals greater than 2 years.

10 CFR Part 50, Appendix J. Section III.D.3

Type C tests shall be performed during each reactor shutdown for refueling but in no case at intervals greater than 2 years.

By letter dated September 26, 1994, NNECO requested schedular exemptions from the above requirements. NNECO recently conducted a review of the Type B and Type C test data and on September 23, 1994, determined that a number of components, for which Type B and Type C testing is required, have exceeded their respective 24-month interval by up to approximately four months. Previously, Millstone Unit 2 considered the Type B and Type C tests to constitute one group such that the 2-year surveillance window began after the last component test was completed during the refueling outage. A review of this rationale and discussions with industry counterparts and the NRC staff determined that this was not the appropriate interpretation. Rather, each Type B or C test of a penetration or valve should be considered unique, each with its own 2-year surveillance window. Using the appropriate interpretation, NNECO determined on September 23, 1994, that a number of Type B and Type C tests have exceeded their required 24-month test interval by up to approximately 4 months. The requirement to perform Type B and Type C local leak rate tests (LLRTs) on September 23, 1994, when NNECO discovered the misinterpretation of the requirement, would require an unscheduled plant shut down, given the current Millstone Unit 2 refueling outage schedule. The total schedular delay in testing components will accumulate to be as much as 4 months before the plant is shutdown for refueling.

III

By letter dated September 26, 1994, NNECO requested an exemption to the requirements of Section III.D.2(a) and III.D.3 which require that Type B and C testing be performed during each reactor shutdown for refueling but in no case at intervals greater than 2 years. In their submittal and in a phone conference between the staff and NNECO on September 24, 1994, NNECO stated that they recently conducted a review of the Type B and Type C test data and on September 23, 1994, determined that a number of components, for which Type B and Type C testing is required, have exceeded their respective 24-month interval by up to approximately 4 months. The previously refueling was lengthy (approximately 7 months) due to the replacement of both steam generators. The LLRTs during the outage, were conducted from June 1992 through December 1992. Previously, NNECO considered the Type B and Type C tests to constitute one group such that the 2-year surveillance window began after the last component test was completed during the refueling outage. A review of this rationale and discussions with industry counterparts and the NRC staff determined that this was not the appropriate interpretation. Rather, each Type B or C test of a penetration or valve should be considered unique, each with its own 2-year surveillance window. Using the appropriate interpretation, NNECO determined on September 23, 1994, that a number of Type B and Type C tests have exceeded their required 24-month test interval by up to approximately 4 months. The requirement to perform Type B and Type C LLRTs on September 23, 1994, when NNECO discovered the misinterpretation of the requirement, would require an unscheduled plant shutdown, given the current Millstone Unit 2 refueling outage schedule. The total schedular delay in testing components will accumulate to be as much as 4 months before the plant is shutdown for refueling.

NNECO stated in their submittal that they had completed the second Type A test for the present 10-year service period successfully on December 24, 1992. The "As-Found" and "As-Left" integrated leakage rate test ILRT results were 0.2809 weight percent per day and 0.2577 weight percent per day respectively. Each ILRT result was below the Technical Specifications limit which demonstrates the overall leak-tightness of the containment. In addition, as of December 1992, the total Type B and C "As-Found" and "As-Left" leakage results were 0.049 weight percent per day and 0.008 weight percent per day. These values represent approximately 16.3% and 2.7% of the Technical Specification limit respectively. The results of these tests demonstrate that Millstone Unit 2 has maintained control of containment integrity by maintaining a conservative margin between the acceptance criterion and the "As-Found" and "As-Left" leakage rates. Subsequent to this ILRT, during Cycle 12, maintenance on several containment isolation valves was performed. The post-maintenance retest requirements were accomplished by successful performance of Type C test. Thus, the previously Type A, B and C tests and prior post-maintenance retests of selected valves have demonstrated the leak-tightness of the containment and the reliability of the penetrations/valves.

Based on the above evaluation, the staff finds there is reasonable assurance that the containment leakage-limiting function will be maintained and that a forced outage to perform Type B and C tests is not necessary. Therefore, the staff finds the requested temporary exemption, to allow the Type B and C test intervals to be extended to the end of the 12th refueling outage which began on October 1, 1994, to be acceptable.

IV

Accordingly, the Commission has determined that, pursuant to 10 CFR 50.12(a), the requested exemption is authorized by law, will not present an undue risk to the public health and safety, and is consistent with the common defense and security. Further, the Commission finds that the special circumstances required by 10 CFR 50.12(a)(2)(ii) are present. Application of the regulation in these particular circumstances is not necessary to achieve the underlying purpose of the rule in that, as discussed in Section III, the containment leakage-limiting function will be maintained.

An exemption is hereby granted from the requirements of Sections III.D.2(a) and III.D.3 of appendix J to 10 CFR part 50, which require that Type B and C tests be performed during each reactor shutdown for refueling but in no case at intervals greater than 2 years until end of the current refueling outage.

Pursuant to 10 CFR 51.32, the Commission has determined that the granting of this Exemption will have no significant impact on the quality of the human environment (59 FR 50928).

This Exemption is effective upon issuance.

Dated at Rockville, Maryland this 12th day of October 1994.

For the Nuclear Regulatory Commission.

Walter R. Butler,

Acting Director, Division of Reactor Projects—I/II, Office of Nuclear Reactor Regulation.

[FR Doc. 94–26142 Filed 10–20–94; 8:45 am]

BILLING CODE 7590–01–M

OFFICE OF SCIENCE AND TECHNOLOGY POLICY

National Bioethics Advisory Commission Proposed Charter

AGENCY: Office of Science and Technology Policy (OSTP).

ACTION: Extension of Request for Comments.

SUMMARY: On August 12, 1994, the Office of Science and Technology Policy published a proposal to establish a National Bioethics Advisory Commission within the Executive Branch (FR Vol. 59, No. 155, pp 41584–6). The Commission would be charged to consider issues of bioethics arising from research on human biology and behavior, and the applications of that research. The deadline for receipt of comments was given as October 11. This notice serves to extend the deadline until October 31.

DATES: Comments must be received on or before October 31, 1994.

ADDRESSES: Submit written comments by mail to: Bioethics Docket, Office of Science and Technology Policy, Room 436, OEOB, Washington, D.C. 20500, by FAX to: 202–456–6027, or by internet to: levinson@ostp.eop.gov.

FOR FURTHER INFORMATION CONTACT: By mail: Rachel E. Levinson, Assistant Director for Life Sciences, Office of Science and Technology Policy, Room 436, OEOB, Washington, D.C. 20500. Office telephone number: 202–456–6137.

Barbara Ann Ferguson,

Assistant Director for Budget and Administration.

[FR Doc. 94–26191 Filed 10–18–94; 2:08 pm]

BILLING CODE 3170-01-P

SECURITIES AND EXCHANGE COMMISSION

[Release No. 34–34848; File No. SR–Amex–94–39]

Self-Regulatory Organizations; Order Granting Accelerated Approval of a Proposed Rule Change and Notice of Filing and Order Granting Accelerated Approval of Amendment No. 1 to the Proposed Rule Change by the American Stock Exchange, Inc. Relating to the Listing and Trading of Banking Industry Portfolio Indexed Term Notes

October 17, 1994.

I. Introduction

On September 22, 1994, the American Stock Exchange, Inc. ("Amex" or "Exchange"), pursuant to Section 19(b)(1) of the Securities Exchange Act of 1934 ("Act")[1] and Rule 19b–4 thereunder,[2] filed with the Securities and Exchange Commission ("SEC" or "Commission") a proposed rule change to list and trade Indexed Term Notes ("Notes"), the return on which is based upon a static portfolio of banking industry securities ("Banking Industry Portfolio"). Notice of the proposal appeared in the **Federal Register** on October 4, 1994.[3] No comment letters were received on the proposed rule change. The Exchange filed Amendment No. 1 to the proposal on October 11, 1994.[4] This order approves the proposal, as amended.

II. Description of the Proposal

Under Section 107 of the Amex Company Guide ("Guide"), the Exchange may approve for listing and trading securities which cannot be readily categorized under the listing criteria for common and preferred stocks, bonds, debentures, or warrants.[5] The Amex now proposes to list for trading, under Section 107A of the Guide, Notes whose value is based in whole or in part on a static index composed of twenty actively-traded bank stocks.[6]

The Notes are non-convertible debt securities of Lehman Brothers, Inc. ("Lehman Brothers") and will conform to the listing guidelines under Section 107A of the Guide.[7] Although the specific maturity date will not be established until immediately prior to the time of the offering, the Notes will provide for maturity within a period of not less than one nor more than seven years from the date of issue. The Notes provide for a single payment at maturity, and will bear no periodic payments of interest. Banking Industry Portfolio Notes will entitle the owner at maturity to receive an amount based upon the percentage change between the "Original Portfolio Value" and the "Ending Average Portfolio Value;" provided, however, that: (1) the amount payable at maturity will not be less than 90% of the principal amount of the Notes; and (2) the issuer may place a cap on the amount to be paid on the Notes at maturity.[8] The "Original Portfolio Value" is the value of the Banking Industry Portfolio on the date on which the issuer prices the Notes for the initial offering to the public. The "Ending Average Portfolio Value" is the average of the closing prices of the Banking Industry Portfolio securities for a specified number of days prior to maturity of the Notes.[9] The Ending Average Portfolio Value will be used in calculating the amount owners will receive upon maturity.[10]

If market value of the Banking Industry Portfolio has declined, the owners of the Banking Industry Portfolio Notes will receive at least 90% of the principal amount of the Notes. The payment at maturity is based on charges in the value of the Banking Industry Portfolio, subject to any cap on

---

[1] 15 U.S.C. 78s(b)(1) (1986).

[2] 17 CFR 240.19b–4 (1992).

[3] See Securities Exchange Act Release No. 34723 (September 27, 1994), 59 FR 50631 (October 4, 1994).

[4] In Amendment No. 1 to the proposed rule change, the Exchange proposes to remove Crestar Financial Corp from the Banking Industry Portfolio and replace it with Citizens Bancorp (Md.). See Letter from Claire McGrath, Managing Director and Special Counsel, Amex, to Michael Walinskas, Branch Chief, Office of Market Supervision ("OMS"), Division of Market Regulation ("Division"), Commission, dated October 11, 1994.

[5] See Securities Exchange Act Release No. 27753 (March 1, 1990), 55 FR 8626 (March 8, 1990).

[6] The specific components of the Banking Industry Portfolio are: Bancorp Hawaii, Inc.; Barnett Banks, Inc.; Baybanks, Inc.; Citizens Bancorp (Md.); City National Corp.; Corestates Financial; First American Corp.; First Chicago Corp.; Hibernia Corp.; Mercantile Bancorp; Michigan National; Midlantic Corp.; North Fork Bancorp; Provident Bankshares; Summit Bancorp; U.S. Bancorp; UJB Financial Corp.; Union Planters Corp.; UST Corp.; and Vermont Financial Services.

[7] Specifically, the Notes must have: (1) a minimum public distribution of one million trading units; (2) a minimum of 400 holders; (3) an aggregate market value of at least $4 million; and (4) a term of at least one year. Additionally, the issuer of the Notes (*i.e.*, Lehman Brothers) must have assets of at least $100 million, stockholders' equity of at least $10 million, and pre-tax income of at least $750,000 in the last fiscal year or in two of the three prior fiscal years. As an alternative to these financial criteria, the issuer must have either: (1) assets in excess of $200 million and stockholders' equity in excess of $10 million; or (2) assets in excess of $100 million and stockholders' equity in excess of $20 million.

[8] For example, Lehman Brothers could place a cap on the amount to be received at maturity as a stated percentage of the issuance price, *e.g.*, 150% of the issuance price. Alternatively, a cap could be in the form of a participation rate whereby a holder of the Notes would participate in a stated percentage of the total percentage change between the Ending Portfolio Value and the Original Portfolio Value, *e.g.*, 80% of the total appreciation of the Banking Industry Portfolio during the term of the Notes. The Commission notes that these examples are by way of illustration, not of limitation, as to how a cap on the amount to be paid to holders of the Notes at maturity could be constructed by Lehman Brothers.

[9] Specifically, the Ending Average Portfolio Value will equal the average of the closing prices for the Banking Industry Portfolio securities for the first 10 of the last 20 trading days prior to maturity of the Notes. Telephone conversation between Benjamin Krause, Senior Vice President, Capital Markets Group, Amex, and Brad Ritter, Senior Counsel, OMS, Division, Commission, on October 11, 1994.

[10] The Banking Industry Portfolio Notes will entitle a holder at maturity to receive not less than 90% of the original issue price for the Notes. Additionally, holders of the Notes may not receive the full amount of the change between the Ending Portfolio Value and the Original Portfolio Value.

appreciation that may be included by the issuer, but does not reflect the payment of dividends on the securities that comprise the portfolio. Banking Industry Portfolio Notes are cash-settled in that they do not give holder any right to receive a portfolio security or any other ownership right or interest in the portfolio securities, although the return on the investment is based on the aggregate value of the Banking Industry Portfolio securities.

According to the Amex, Banking Industry Portfolio Notes will allow investors to combine the protection of a portion of the principal amount of the Notes with a potential additional payment based upon the performance of a portfolio of 20 highly capitalized banking industry stocks. In particular, the proposed Banking Industry Portfolio Notes will provide at least 90% principal protection with the opportunity to participate in any upside appreciation of the underlying Banking Industry Portfolio, subject to any cap on appreciation that may be included by the issuer.

The Banking Industry Portfolio consists of securities of 20 companies that collectively, at the time of issuance,[11] will satisfy the generic listing requirements approved by the Commission for the listing and trading of options on newly established narrow-based indexes.[12] Specifically, the component securities of the Banking Industry Portfolio satisfy the following criteria: (1) a minimum market capitalization of $75 million, except that up to 10% of the component securities may have a market capitalization of not less than $50 million; (2) trading volume in each of the six months prior to the offering of the Notes of not less than one million shares, except that up to 10% of the component securities may have a trading volume in each of the six months prior to the offering of the Notes of not less than 500,000 shares; (3) at least 90% of the component securities will meet the then current criteria for standardized options trading set forth in Exchange Rule 915; (4) all components of the Banking Industry Portfolio will be listed on the Amex or the New York Stock Exchange, or will be National Market securities traded through Nasdaq; (5) all components of the Banking Industry Portfolio will be subject to last sale reporting pursuant to Rule 11Aa3–1 of the Act; and (6) no more than 20% of the weight of the Banking Industry Portfolio shall be represented by foreign securities or ADRs for which the Exchange does not have in place a comprehensive surveillance sharing agreement with the appropriate regulatory organization(s) in such country(ies).[13]

At the outset, each of the securities in the Banking Industry Portfolio will have equal representation. Specifically, each security included in the Banking Industry Portfolio will be assigned a multiplier on the date of issuance so that the security represents an equal percentage of the value of the entire portfolio on the date of issuance. The multiplier indicates the number of shares (or fraction of one share) of a security, given its market price on an exchange or through Nasdaq, to be included in the calculation of the portfolio. Accordingly, each of the 20 companies included in the Banking Industry Portfolio will represent approximately 5.0% of the total portfolio at the time of issuance.

The multiplier for each security in the Banking Industry Portfolio will generally remain unchanged except for limited adjustments that may be necessary as a result of stock splits or stock dividends.[14] There will be no adjustments to the multipliers to reflect cash dividends paid with respect to a portfolio security. In addition, no adjustments of any multiplier of a portfolio security will be made unless such adjustment would require a change of at least 1% in the multiplier then in effect.

If the issuer of a security included in the Banking Industry Portfolio no longer exists, whether for reason of a merger, acquisition or similar type of corporate control transaction, then Lehman Brothers will assign to that security a value equal to the security's final value for the purposes of calculating portfolio values. For example, if a company included in the portfolio is acquired by another company, Lehman Brothers shall thereafter assign a value to the shares of the acquired company's securities equal to the value per share at the time that the acquisition takes place.

If the issuer of a Banking Industry Portfolio security is in the process of liquidation or subject to a bankruptcy proceeding, insolvency, or other similar adjudication, such security will continue to be included in the Banking Industry Portfolio so long as a market price on an exchange or through Nasdaq for such security is available. If such a market price is no longer available for a portfolio security, including, but not limited to, liquidation, bankruptcy, insolvency, or any other similar proceeding, then the value of the portfolio security will be assigned a value of zero in connection with calculating the daily portfolio value and the closing portfolio value of the Banking Industry Portfolio, for so long as no such market price exists for that security.[15]

The value of the Banking Industry Portfolio will be calculated continuously by the Amex and will be disseminated every 15 seconds over the Consolidated Tape Association's Network B. The portfolio value will equal the sum of the products of the most recently available market prices and the applicable multipliers for the portfolio securities.

The Notes may not be redeemed prior to maturity and are not callable by the issuer. Holders of Banking Industry Portfolio Notes will be able to cash-out of their investment by selling the security on the Amex. The Exchange anticipates that the trading value of the security in this secondary trading market will depend in large part on the value of the securities comprising the Banking Industry Portfolio and also on such other factors as the level of interest rates, the volatility of the value of the Banking Industry Portfolio, the time remaining to maturity, dividend rates, and the creditworthiness of the issuer, Lehman Brothers.

[11] The Commission notes that because the Banking Industry Portfolio is a static portfolio, the Amex will not make adjustments subsequent to issuance of the Notes for purposes of maintaining compliance with these standards.

[12] See Securities Exchange Act Release No. 34157 (June 3, 1994), 59 FR 30062 (June 10, 1994).

[13] The exchange has represented that Lehman Brothers may conclude prior to issuance of the Notes, based on changes in its market research and investment strategy, that the composition of the Banking Industry Portfolio should be altered. In such an event, Lehman Brothers would be allowed, with the concurrence of the staff of the Commission, to replace component securities accounting for up to 10% of the number of components of the Banking Industry Portfolio (*i.e.*, two components) provided that with the replacement components, the Banking Industry Portfolio still satisfies the requirements for the listing and trading of options on newly established narrow-based indexes. *Id.* If Lehman Brothers determines to make any changes to the Banking Industry Portfolio that do not satisfy these conditions, the Exchange would be required to obtain approval from the Commission pursuant to Section 19(b) of the Act before listing Notes based on the altered Banking Industry Portfolio.

[14] Lehman Brothers will adjust the multiplier of any portfolio security if the security is subject to a stock split or reverse split to equal the product of the number of shares issued with respect to one share of the portfolio security and the prior multiplier. In the case of a stock dividend, the multiplier will be adjusted so that the new multiplier will equal the former multiplier plus the product of the number of shares of such portfolio security issued with respect to one share of the portfolio security and the prior multiplier.

[15] Lehman Brothers will not attempt to find a replacement stock or to compensate for the extinction of a security due to bankruptcy or a similar event.

Because Banking Industry Portfolio Notes are linked to a portfolio of equity securities, the Amex's existing equity floor trading rules will apply to the trading of Banking Industry Portfolio Notes. First, pursuant to Amex Rule 411, the exchange will impose a duty of due diligence on its members and member firms to learn the essential facts relating to every customer prior to trading Banking Industry Portfolio Notes.[16] Second, consistent with Amex Rule 411, the Exchange will further require that a member or member firm specifically approve a customer's account for trading Banking Industry Portfolio Notes prior to, or promptly after, the completion of the transaction. Third, Banking Industry Portfolio Notes will be subject to the equity margin rules of the Exchange. Fourth, the Exchange will, prior to trading Banking Industry Portfolio Notes, distribute a circular to the membership providing guidance with regard to member firm compliance responsibilities (including suitability recommendations) when handling transactions in Banking Industry Portfolio Notes and highlighting the special risks and characteristics of the Banking Industry Portfolio Notes.[17]

III. Commission Findings and Conclusions

The Commission finds that the proposed rule change is consistent with the requirements of the Act and the rules and regulations thereunder applicable to a national securities exchange, and, in particular, the requirements of Section 6(b)(5) of the Act.[18] Specifically, the Commission believes that providing for exchange-trading of Banking Industry Portfolio Notes will offer a new and innovative means of participating in the market for banking industry securities.[19] In particular, the Commission believes that Banking Industry Portfolio Notes will permit investors to gain equity exposure in such companies, while at the same time, limiting the downside risk of the original investment. For the reasons discussed in the Commission's order approving the listing of Basic Industry Portfolio Notes,[20] the Commission finds that the listing and trading of Banking Industry Portfolio Notes is consistent with the Act.

As with the Basic Industry Portfolio Notes, Banking Industry Portfolio Notes are not leveraged instruments. Their price, however, will still be derived and based upon the underlying linked securities. Accordingly, the level of risk involved in the purchase or sale of Banking Industry Portfolio Notes is similar to the risk involved in the purchase or sale of traditional common stock. Nonetheless, the Commission has several specific concerns with this type of product because the final rate or return of the Notes is derivatively priced, based on the performance of the underlying securities. The concerns include: (1) investor protection concerns, (2) dependence on the credit of the issuer of the security, (3) systemic concerns regarding position exposure of issuers with partially hedged positions or dynamically hedged positions, and (4) the impact on the market for the underlying linked securities.[21] The Commission believes the Amex has adequately addressed each of these issues such that the Commission's regulatory concerns are adequately minimized.[22] In particular, by imposing the listing standards, suitability, disclosure, and compliance requirements noted above, the Amex has adequately addressed the potential public customer concerns that could arise from the hybrid nature of the Notes.[23] Further, the Commission believes that the listing standards and issuance restrictions should help to reduce the likelihood of any adverse market impact on the securities comprising the Banking Industry Portfolio.

The Commission realizes that Banking Industry Portfolio Notes are dependent upon the individual credit of the issuer, Lehman Brothers. To some extent this credit risk is minimized by the Exchange's continued listing standards which require issuers to maintain an aggregate market value of $1 million for its publicly-held shares.[24] In addition, the Exchange's hybrid listing standards further require that Banking Industry Portfolio Notes have at least $4 million in market value.[25] In any event, financial information regarding Lehman Brothers, in addition to the information on the issuers of the underlying securities comprising the Banking Industry Portfolio, will be publicly available.[26]

The Commission finds good cause for approving the proposed rule change and Amendment No. 1 to the proposal prior to the thirtieth day after the date of publication of notice of filing thereof in the **Federal Register**. Specifically, the Commission believes that the proposal, as amended, does not raise any regulatory issues that were not addressed by the Amex in its proposal to list and trade Basic Industry Portfolio Notes.[27] Additionally, the Exchange's proposal to list and trade Basic Industry Portfolio Notes was noticed for the full comment period without any comments being received by the Commission. Accordingly, the Commission believes that it is consistent with Section 6(b)(5) of the Act to approve the proposed rule change and Amendment No. 1 thereto on an accelerated basis.

Interested persons are invited to submit written data, views and arguments concerning Amendment No. 1 to the proposed rule change. Persons making written submissions should file six copies thereof with the Secretary, Securities and Exchange Commission, 450 Fifth Street, NW., Washington, DC 20549. Copies of the submissions, all subsequent amendments, all written statements with respect to the proposed rule change that are filed with the Commission, and all written communications relating to the proposed rule change between the Commission and any person, other than those that may be withheld from the public in accordance with the provisions of 5 U.S.C. 552, will be available for inspection and copying at the Commission's Public Reference Section, 450 Fifth Street, NW., Washington, DC 20549. Copies of such filings will also be available for inspection and copying at the principal office of the Amex. All submissions should refer to File No. SR–Amex–94–39 and should be submitted by November 14, 1994.

It is Therefore Ordered, pursuant to Section 19(b)(2) of the Act,[28] that the proposed rule change (File No. SR–Amex–94–39), as amended, is approved.

---

[16] Amex Rule 411 requires that every member, member firm or member corporation use due diligence to learn the essential facts relative to every customer and to every order or account accepted.

[17] The circular shall also highlight any cap on appreciation, if any, that the issuer includes in the Notes.

[18] 15 U.S.C. 78f(b)(5) (1988).

[19] The Commission Notes that the Banking Industry Portfolio Notes are very similar in structure to Basic Industry Portfolio Notes recently approved for listing on the Amex. See Securities Exchange Act Release No. 34820 (October 11, 1994) ("Exchange Act Release No. 34820").

[20] *Id.*

[21] *Id.*

[22] *Id.*

[23] The Exchange will also distribute a circular to its membership, in a form approved by the Commission, calling attention to the specific risks associated with Banking Industry Portfolio Notes.

[24] See Amex Company Guide § 1003(b).

[25] See Amex Company Guide § 107A.

[26] The companies that comprise the Banking Industry Portfolio are reporting companies under the Act.

[27] See Exchange Act Release No. 34820, *supra* note 19.

[28] 15 U.S.C. 78s(b)(2) (1988).

For the Commission, by the Division of Market Regulation, pursuant to delegated authority.[29]

Margaret H. McFarland,

Deputy Secretary.

[FR Doc. 94–26169 Filed 10–20–94; 8:45 am]

BILLING CODE 8010–01–M

[Release No. 34–34846; File No. SR–PTC–94–05]

Self-Regulatory Organizations; Participants Trust Company; Notice of Filing of Proposed Rule Change Establishing Early Principal and Interest Distribution on Government National Mortgage Association II Securities

October 14, 1994.

Pursuant to Section 19(b)(1) of the Securities Exchange Act of 1934 ("Act"),[1] notice is hereby given that on October 11, 1994, the Participants Trust Company ("PTC") filed with the Securities and Exchange Commission ("Commission") the proposed rule change (File No. SR–PTC–94–05) as described in Items I, II, and III below, which Items have been prepared primarily by the self-regulatory organization. The Commission is publishing this notice to solicit comments on the proposed rule change from interested persons.

I. Self-Regulatory Organization's Statement of the Terms of Substance of the Proposed Rule Change

The proposed rule change will establish early principal and interest ("P&I") distribution on Government National Mortgage Association ("GNMA") II securities.

II. Self-Regulatory Organization's Statement of the Purpose of, and Statutory Basis for, the Proposed Rule Change

In its filing with the Commission, the self-regulatory organization included statements concerning the purpose of and basis for the proposed rule change and discussed any comments it received on the proposed rule change. The text of these statements may be examined at the places specified in Item IV below. The self-regulatory organization has prepared summaries, set forth in sections A, B, and C below, of the most significant aspects of such statements.

A. Self-Regulatory Organization's Statement of the Purpose of, and the Statutory Basis for, the Proposed Rule Change

The purpose of the proposed rule change is to extend the program for the early distribution of P&I to GNMA II P&I distributions. Under the proposal, all of the P&I on GNMA II securities will be distributed by PTC to its participants by Fedwire early in the day of distribution rather than by credit to the participants' cash balances payable at end of day settlement.[2]

Background

Before November 1993, PTC's rules and procedures provided that PTC disburse P&I on securities deposited at PTC by means of a credit to the participant's applicable account cash balance. This resulted in the participant's receipt of available funds in the amount of the P&I net of any account debits and/or credits at the end of the day as part of the settlement process. In November 1993, PTC's rules were amended to eliminate the requirement that P&I be disbursed by means of a credit to a participant's cash balance and to permit PTC to make payment of P&I either by intraday Fedwire transfer of immediately available funds or by means of a credit to the applicable cash balance, as PTC deems advisable from time to time.

At that time, the Commission required PTC to limit intraday disbursement of P&I to the amount of collected and available P&I payments without recourse to funds available to PTC from other sources for P&I disbursement such as PTC's own funds, the cash portion of the mandatory deposits to the participant's fund, and borrowed funds secured by the P&I receipts.[3] PTC then began a pilot program to distribute up to 50% of the P&I payable with respect to GNMA I securities subject to the requirement that the intraday distribution be made from collected and available GNMA I P&I only.

PTC now seeks to expand its intraday P&I disbursement program to permit intraday disbursement of all GNMA II P&I to participants who elect to receive the intraday distribution subject to retaining discretion to suspend the program if it is deemed necessary or advisable in the future.

GNMA II P&I Proposal

Currently, Chemical Bank as central paying and transfer agent for the GNMA II program credits PTC's account on Chemical Bank's books in the amount of the GNMA II payment. PTC transfers the funds via Fedwire transfer into PTC's account at the Federal Reserve Bank of New York on the GNMA II distribution date.[4] PTC credits the GNMA II P&I to its participants' accounts at PTC on the day of receipt and disburses the payment in same-day funds net of any intraday account debits and credits as part of the end-of-day settlement. PTC does not use its uncommitted line of credit to fund the GNMA II P&I disbursement.[5] Under the proposal, PTC anticipates passing-through all GNMA II P&I upon its receipt from Chemical Bank. This will result in the intraday disbursement of all payable GNMA II P&I by Fedwire transfer at or before approximately 12 noon to all participants who elect to receive it intraday.

PTC believes that because the proposed rule change facilitates the prompt and accurate clearance and settlement of securities transactions and provides for the safeguarding of securities and funds in PTC's custody or control or for which it is responsible, it is consistent with Section 17A of the Act and the rules and regulations thereunder applicable to PTC.

B. Self-Regulatory Organization's Statement on Burden on Competition

PTC does not believe that the proposed rule change will impose any burden on competition.

C. Self-Regulatory Organization's Statement on Comments on the Proposed Rule Change Received From Members, Participants, or Others

PTC has neither solicited nor received comments on the proposed rule change.

---

[29] 17 CFR 200.30–3(a)(12) (1993).

[1] 15 U.S.C. 78s(b)(1) (1988).

[2] PTC's present program for the early distribution of P&I permits the distribution of up to 50% of P&I payable on GNMA I securities by intraday Fedwire transfer of funds on the distribution date, the 15th day of the month, with the balance distributed by credit to the participants' cash balances payable at end of day settlement. PTC intends to continue the intraday distribution of GNMA I P&I as currently constituted subject to its discretion to suspend the program if it is deemed necessary or advisable at any time in the future.

[3] Refer to Securities Exchange Act Release Nos. 33132 (November 9, 1993), 58 FR 59501 and 33586 (April 12, 1994), 59 FR 59501.

[4] The GNMA II distribution date is generally the 20th day of the month. If the 19th day of the month is not a business day but the 20th day of the month is a business day, then the distribution date is the first business day after the 20th day of the month. If both the 19th and 20th days of the month are not business days, the first business day thereafter is the distribution date.

[5] During the period from January 1994 through August 1994, the amount of the GNMA II monthly P&I has averaged just under $1 billion. The largest monthly P&I amount was in April 1994 in the amount of $1.2 billion, and the lowest monthly P&I amount was in August 1994 in the amount of $800 million.

III. Date of Effectiveness of the Proposed Rule Change and Timing for Commission Action

Within thirty-five days of the date of publication of this notice in the **Federal Register** or within such longer period (i) as the Commission may designate up to ninety days of such date if it finds such longer period to be appropriate and publishes its reasons for so finding or (ii) as to which the self-regulatory organization consents, the Commission will:

(A) by order approve such proposed rule change or

(B) institute proceedings to determine whether the proposed rule change should be disapproved.

IV. Solicitation of Comments

Interested persons are invited to submit written data, views, and arguments concerning the foregoing. Persons making written submissions should file six copies thereof with the Secretary, Securities and Exchange Commission, 450 Fifth Street, NW., Washington, DC 20549. Copies of the submission, all subsequent amendments, all written statements with respect to the proposed rule change that are filed with the Commission, and all written communications relating to the proposed rule change between the Commission and any person, other than those that may be withheld from the public in accordance with the provisions of 5 U.S.C. 552, will be available for inspection and copying in the Commission's Public Reference Section, 450 Fifth Street, NW., Washington, DC 20549. Copies of such filing will also be available for inspection and copying at the principal office of PTC. All submissions should refer to file number SR–PTC–94–05 and should be submitted by November 14, 1994.

For the Commission, by the Division of Market Regulation, pursuant to delegated authority.

Margaret H. McFarland,

Deputy Secretary.

[FR Doc. 94–26168 Filed 10–20–94; 8:45 am]

BILLING CODE 8010–01–M

DEPARTMENT OF TRANSPORTATION

Federal Aviation Administration

Advisory Circular: Equipment, Systems, and Installations in Part 23 Airplanes

AGENCY: Federal Aviation Administration (FAA), DOT.

ACTION: Notice of availability of proposed advisory circular (AC) and request for comments.

SUMMARY: This notice announces the availability and request for comments on proposed AC 23.1309–1B, which cancels AC 23.1309–1A, dated June 3, 1992, and Change 1 to AC 23.1309–1A, dated August 5, 1992. The proposed AC provides information and guidance addressing the National Transportation Safety Board Recommendation (NTSB) A–92–89, and to update the policy for environmental and atmospheric conditions, and software assessment.

DATES: Comments must be received on or before December 20, 1994.

ADDRESSES: Send all comments on the proposed AC to: Federal Aviation Administration, Small Airplane Directorate, Aircraft Certification Service, Standards Office (ACE–110), 601 East 12th Street, Kansas City, Missouri 64106.

FOR FURTHER INFORMATION CONTACT: Terre Flynn, Standards Staff (ACE–110), Small Airplane Directorate, Aircraft Certification Service, Federal Aviation Administration; telephone number (816) 426–6941.

SUPPLEMENTARY INFORMATION: Any person may obtain a copy of this proposed AC by contacting the person named above under **FOR FURTHER INFORMATION CONTACT.**

Comments Invited

We invite interested parties to submit comments on the proposed AC. Commenters must identify AC 23.1309–1B and submit comments to the address specified above. The FAA will consider all communications received on or before the closing date for comments before issuing the final AC. The FAA is requesting that comments be made only on the text with vertical bars, as these are the only changes to the AC. The proposed AC and comments received may be inspected at the Standards Office (ACE–110), Suite 900, 1201 Walnut, Kansas City, Missouri, between the hours of 7:30 a.m. and 4:00 p.m. weekdays, except Federal holidays.

Background

NTSB Recommendation A–92–89 recommended manufacturers of integrated flight guidance and control systems be provided additional information in the Airplane Flight Manual (AFM) and training information regarding systems failures. The FAA's response to the recommendation includes the revision to AC 23.1309–1A that would include additional guidance to needed warning and procedural information for complex integrated systems for inclusion in the AFM. In the process of revising this AC, the policy and guidance for environmental and atmospheric conditions, and software assessment, are also updated.

Issued in Kansas City, Missouri, October 3, 1994.

John R. Colomy,

Acting Manager, Small Airplane Directorate, Aircraft Certification Service.

[FR Doc. 94–25896 Filed 10–20–94; 8:45 am]

BILLING CODE 4910–13–M

Federal Highway Administration

Environmental Impact Statement: San Francisco, CA

AGENCY: Federal Highway Administration (FHWA), DOT.

ACTION: Notice of intent.

SUMMARY: The FHWA is issuing this notice to advise the public that an Environmental Impact Statement will be prepared for a proposed project in San Francisco, California.

FOR FURTHER INFORMATION CONTACT: John R. Schultz, Chief, District Operations "A", Federal Highway Administration, California Division, U.S. Bank Plaza, 980 Ninth Street—Suite 400, Sacramento, California 95814–1714, Telephone: (916) 551–1314.

SUPPLEMENTARY INFORMATION: The FHWA, in cooperation with the California Department of Transportation and the City and County of San Francisco, will prepare an Environmental Impact Statement (EIS) on alternatives to replacement of the Embarcadero Freeway and access ramps to/from the Bay Bridge, I–80 and U.S. 101 known as the Terminal Separator Structure.

The proposed project would involve an area bounded by the eastern edge of the Embarcadero Roadway on the east side, Broadway on the north and Bryant Street on the south side, while portions of Fifth, and Sansome Streets, form the boundary to the west. The proposed project is located in an existing urban area and will affect public, commercial, and residential properties, some of which have an historic interest. The project is funded in part by Federal Emergency Relief funds. Alternatives under consideration include:

1. Taking no action: Maintain the local surface roadway which links The Embarcadero north and south and provide no new access ramps to/from the Bay Bridge, I–80 and U.S. 101.

2. Reconstructing The Embarcadero roadway between Folsom and Broadway as a four to six lane roadway but providing no

new access ramps to/from the Bay Bridge, I–80 and U.S. 101.

3. Reconstructing The Embarcadero roadway, as in 2. above and constructing a new on-ramp starting from Harrison Street and Essex Street, crossing over Second Street, connecting to I–80 westbound U.S. 101, and a new off-ramp accessing Second Street between Bryant and Harrison Streets from U.S. 101 northbound.

4. Reconstructing The Embarcadero roadway, as in 2. above, with various minor modifications to the existing system.

5. Reconstructing The Embarcadero roadway, as a four to six-lane roadway with a split at the foot of Market Street and constructing a new on-ramp starting from Harrison Street and Essex Street, crossing over Second Street, connecting to I–80 westbound U.S. 101, and a new off-ramp accessing Second Street between Bryant and Harrison Streets from U.S. 101 northbound.

In addition to these alternatives, the City may also consider alternatives which would involve reconstructing The Embarcadero roadway, as in 2. above and rebuilding the Terminal Separator Structure (TSS) to its original configuration. An EIS for the Embarcadero Replacement Project was already underway when the San Francisco Board of Supervisors asked that the scope be expanded to include the Terminal Separator Structure. Public scoping session for the expanded EIS was held in March 1994. The Draft EIS will be available for public and agency review prior to the required public hearing. Public notice will be given of the time and place of meetings and hearing. To ensure that the full range of issues relating to this proposed action are addressed and all significant issues identified, comments and suggestions are invited from all interested parties. Comments or questions concerning this proposed action and the EIS should be directed to the FHWA at the address provided above.

(Catalog of Federal Domestic Assistance Program Number 20.205, Highway Planning and Construction. The regulations implementing Executive Order 12372 regarding intergovernmental consultation on Federal programs and activities apply to this program).

Issued on: October 12, 1994.

John R. Schultz,

Chief, District Operations "A", California Division, Federal Highway Administration.

[FR Doc. 94–26086 Filed 10–20–94; 8:45 am]

BILLING CODE 4910–22–M

Maritime Administration

Notice of Change of Name of Approved Trustee

Notice is hereby given that effective September 1, 1994, Continental Bank, National Association, with offices at 231 South LaSalle Street, Chicago, Illinois 60697, has changed its name to Bank of America Illinois.

Dated: October 17, 1994.

By Order of the Maritime Administrator.

Joel C. Richard,

Acting Secretary.

[FR Doc. 94–26148 Filed 10–20–94; 8:45 am]

BILLING CODE 4910–81–M

Notice of Approval of Applicant as Trustee

Notice is hereby given that First Trust of New York, National Association, with offices at 100 Wall Street, New York, New York 10005, has been approved as Trustee pursuant to Public Law 100–710 and 46 CFR part 221.

Dated: October 17, 1994.

By Order of the Maritime Administrator.

Joel C. Richard,

Acting Secretary.

[FR Doc. 94–26147 Filed 10–20–94; 8:45 am]

BILLING CODE 4910–81–M

DEPARTMENT OF THE TREASURY

Internal Revenue Service

[Delegation Order No. 222 (Rev. 3)]

Delegation of Authority

AGENCY: Internal Revenue Service (IRS), Treasury.

ACTION: Delegation of authority.

SUMMARY: Authority to approve the use of pen registers and to authorize the application for issuance of a court order to monitor communications.

EFFECTIVE DATE: September 23, 1994.

FOR FURTHER INFORMATION CONTACT: Pat Allen, CP:CI:R, Room 7030, 1111 Constitution Ave., NW., Washington, DC 20224, telephone 202–622–5688 (not a toll-free call)

Effective Date: September 23, 1994.

Authority to Approve the Use of Pen Registers and to Monitor Communications

Pursuant to the Authority vested in the Commissioner of Internal Revenue By Treasury Order 150–10 and 18 U.S.C. 2516, the authority to approve the use of pen registers; to authorize the application for issuance of a court order to monitor communications via display pagers, facsimile transceivers and tone and voice pagers (non-aural portion of the communications); and to approve the monitoring of communications via tone-only pagers is delegated as follows:

1. The Assistant Commissioner (Criminal Investigation) and anyone acting for him/her is authorized to approve the use of pen registers in the investigations involving felony violations within the jurisdiction of Criminal Investigation, wagering violations and for locating fugitives from justice charged with a violation who were the subject of an investigation by Criminal Investigation. Authorization by the Assistant Commissioner (Criminal Investigation) for the use of a pen register is contingent upon the obtaining of a court order prior to installation of the pen register. This authority may not be redelegated.

2. The Assistant Commissioner (Criminal Investigation) and anyone acting for him/her is authorized to approve the application for issuance of a court order to monitor communications via display pagers, facsimile transceivers and tone and voice pagers (non-aural portion of the communications). This authority may not be redelegated.

3. The Chief, Criminal Investigation Division, the Director or Deputy Director, National Operations Division (Criminal Investigation), and anyone acting for these persons may authorize the monitoring of communications via tone-only pagers. This authority may not be redelegated.

4. Delegation Order No. 222, (Rev. 2), effective March 20, 1990, is superseded.

Dated: October 13, 1994.

James McGovern,

(Acting) Chief Compliance Officer.

[FR Doc. 94–26205 Filed 10–20–94; 8:45 am]

BILLING CODE 4830–01–U

Sunshine Act Meetings

Federal Register
Vol. 59, No. 203
Friday, October 21, 1994

This section of the FEDERAL REGISTER contains notices of meetings published under the "Government in the Sunshine Act" (Pub. L. 94-409) 5 U.S.C. 552b(e)(3).

FEDERAL DEPOSIT INSURANCE CORPORATION

Notice of Agency Meeting

Pursuant to the provisions of the "Government in the Sunshine Act" (5 U.S.C. 552b), notice is hereby given that at 10:01 a.m. on Tuesday, October 18, 1994, the Board of Directors of the Federal Deposit Insurance Corporation met in closed session to consider the following:

Reports of the Office of Inspector General.
Personnel matter.
Matters relating to the probable failure of a certain insured depository institution.
Matters relating to the Corporation's supervisory and resolution activities.
Application for Community Savings, F. A., North Palm Beach, Florida, a proposed new federally chartered stock savings association, for Federal deposit insurance.
Application for First Savings Bank of New Jersey, S.L.A, Bayonne, New Jersey, a proposed new state chartered stock savings association, for Federal deposit insurance.

In calling the meeting, the Board determined, on motion of Vice Chairman Andrew C. Hove, Jr., seconded by Director Eugene A. Ludwig (Comptroller of the Currency), concurred in by Mr. John F. Downey, acting in the place and stead of Director Jonathan L. Fiechter (Acting Director, Office of Thrift Supervision), and Chairman Ricki R. Tigert, that Corporation business required its consideration of the matters on less than seven days' notice to the public; that no earlier notice of the meeting was practicable; that the public interest did not require consideration of the matters in a meeting open to public observation; and that the matters could be considered in a closed meeting by authority of subsections (c)(2), (c)(4), (c)(6), (c)(8), (c)(9)(A)(ii), and (c)(9)(B) of the "Government in the Sunshine Act" (5 U.S.C. 552b (c)(2), (c)(4), (c)(6), (c)(8), (c)(9)(A)(ii), and (c)(9)(B)).

The meeting was held in the Board Room of the FDIC Building located at 550 17th Street, NW., Washington, DC.

Dated: October 18, 1994.

Federal Deposit Insurance Corporation.

Leneta G. Gregorie,

Acting Assistant Executive Secretary.

[FR Doc. 94-26274 Filed 10-19-94; 11:50 am]

BILLING CODE 6714-01-M

BOARD OF GOVERNORS OF THE FEDERAL RESERVE SYSTEM

TIME AND DATE: 10 a.m., Wednesday, October 26, 1994.

PLACE: Marriner S. Eccles Federal Reserve Board Building, C Street entrance between 20th and 21st Streets, NW., Washington, DC 20551.

STATUS: Closed.

MATTERS TO BE CONSIDERED:

1. Personnel actions (appointments, promotions, assignments, reassignments, and salary actions) involving individual Federal Reserve System employees.
2. Any items carried forward from a previously announced meeting.

CONTACT PERSON FOR MORE INFORMATION: Mr. Joseph R. Coyne, Assistant to the Board; (202) 452-3204. You may call (202) 452-3207, beginning at approximately 5 p.m. two business days before this meeting, for a recorded announcement of bank and bank holding company applications scheduled for the meeting.

Dated: October 19, 1994.

Jennifer J. Johnson,

Deputy Secretary of the Board.

[FR Doc. 94-26254 Filed 10-19-94; 11:08 am]

BILLING CODE 6210-01-P

BOARD OF GOVERNORS OF THE FEDERAL RESERVE SYSTEM

"FEDERAL REGISTER" CITATION OF PREVIOUS ANNOUNCEMENT: 59 FR 52214, October 14, 1994.

PREVIOUSLY ANNOUNCED TIME AND DATE OF THE MEETING: 10:00 a.m., Wednesday, October 19, 1994.

CHANGES IN THE MEETING: THE OPEN MEETING HAS BEEN CANCELED, AND THE SCHEDULED ITEMS WERE HANDLED VIA NOTATION VOTING.

CONTACT PERSON FOR MORE INFORMATION: Mr. Joseph R. Coyne, Assistant to the Board; (202) 452-3204.

Dated: October 19, 1994.

Jennifer J. Johnson,

Deputy Secretary of the Board.

[FR Doc. 94-26317 Filed 10-19-94; 2:21 pm]

BILLING CODE 6210-01-P

NATIONAL CREDIT UNION ADMINISTRATION

TIME AND DATE: 9:30 a.m., Thursday, October 27, 1994.

PLACE: Board Room, 7th Floor, Room 7047, 1775 Duke Street, Alexandria, Virginia 22314-3428.

STATUS: Closed.

MATTERS TO BE CONSIDERED:

1. Approval of Minutes of Previous Closed Meetings.
2. Administrative Actions under Part 704, NCUA's Rules and Regulations. Closed pursuant to exemption (8).
3. Administrative Action under Part 708, NCUA's Rules and Regulations. Closed pursuant to exemption (8).
4. NCUA's Budget FY 95 and FY 96. Closed pursuant to exemptions (2), (6), and (9)(B).

FOR MORE INFORMATION CONTACT: Becky Baker, Secretary of the Board, Telephone (703) 518-6034.

Becky Baker,

Secretary of the Board.

[FR Doc. 94-26341 Filed 10-19-94; 3:20 pm]

BILLING CODE 7535-01-M

federal register

Friday
October 21, 1994

Part II

Department of Transportation

Federal Aviation Administration

14 CFR Parts 61 and 67
Revision of Medical Standards and Certification Procedures and Duration of Medical Certificates; Proposed Rule

DEPARTMENT OF TRANSPORTATION

Federal Aviation Administration

14 CFR Parts 61 and 67

[Docket No. 27940; Notice No. 94–31]

RIN 2120–AA70

Revision of Medical Standards and Certification Procedures and Duration of Medical Certificates

AGENCY: Federal Aviation Administration (FAA), DOT.

ACTION: Notice of proposed rulemaking (NPRM).

SUMMARY: This notice proposes an extensive amendment of part 67 of the Federal Aviation Regulations (FAR) to revise airman medical standards and medical certification procedures. This announcement, in part, proposes to implement a number of recommendations resulting from a comprehensive review of the medical standards announced in previous notices. As proposed, this revision of the standards for airman medical certification and associated administrative procedures of part 67 will better provide for safety in the aviation system and reflect current medical knowledge, practice, and terminology.

This notice also proposes to amend § 61.23 of part 61 to revise the duration of third-class airman medical certificates, based on the age of the airman, for operations requiring a private, recreational, or student pilot certificate.

DATES: Comments must be submitted on or before February 21, 1995.

ADDRESSES: Comments on this notice should be mailed or delivered, in triplicate, to: Federal Aviation Administration, Office of the Chief Counsel, Attention: Rules Docket (AGC–10), Docket No. 27940, 800 Independence Avenue, SW., Washington, DC 20591. Comments mailed or delivered must be marked Docket No. 27940. Comments may be examined in Room 915G weekdays between 8:30 a.m. and 5 p.m., except on Federal holidays.

FOR FURTHER INFORMATION CONTACT: Carol A. Thomas or Dennis McEachen, Aeromedical Standards Branch, 800 Independence Avenue, SW., Washington, DC 20591; telephone (202) 493–4075.

SUPPLEMENTARY INFORMATION:

Comments Invited

Interested persons are invited to participate in the making of the proposed rule by submitting such written data, views, or arguments as they may desire. Comments relating to the environmental, energy, federalism, or economic impact that might result from adopting the proposals in this notice are also invited. Substantive comments should be accompanied by cost estimates. Comments should identify regulatory docket or notice number and should be submitted in triplicate to the Rules Docket address specified above. All comments received on or before the closing date for comments specified will be considered by the Administrator before taking action on this proposed rulemaking. The proposals contained in this notice may be changed in light of comments received. All comments received will be available, both before and after the closing date for comments, in the Rules Docket for examination by interested persons. A report summarizing each substantive public contact with FAA personnel concerned with this rulemaking will be filed in the docket. Commenters wishing the FAA to acknowledge receipt of their comments submitted in response to this notice must include a preaddressed, stamped postcard on which the following statement is made: "Comments to Docket No. 27940." The postcard will be date stamped and mailed to the commenter.

Public Meeting

Public meetings will be held in Washington, DC, Seattle, WA, and Orlando, FL. A notice of the meeting times and locations will be published later in the **Federal Register**.

Availability of NPRM

Any person may obtain a copy of this NPRM by submitting a request to the Federal Aviation Administration, Office of Public Affairs, Attention: Public Inquiry Center, APA–200, 800 Independence Avenue, S.W., Washington, D.C. 20591, or by calling (202) 267–3484. Communications must identify the notice number of this NPRM.

Persons interested in being placed on the mailing list for future NPRM's should request from the above office a copy of Advisory Circular No. 11–2A, Notice of Proposed Rulemaking Distribution System, which describes the application procedure.

Background

On April 15, 1982, the FAA announced the adoption of Amendment 67–11 (47 FR 16298; April 15, 1982) to the FAR (14 CFR part 67). The amendment revised, among other things, the special discretionary procedures for issuing airman medical certificates to persons who do not qualify for certification under §§ 67.13, 67.15, or 67.17 of the FAR. In the preamble to that amendment, the FAA announced that, in compliance with Executive Order 12291, Federal Regulation (February 17, 1981), it intended to conduct an overall review of the medical standards in part 67 of the FAR. A complete review of the regulations was needed to bring the standards and procedures for airman medical certification up to date with advances in medical knowledge, practice, and technology. Therefore, Amendment 67–11 was considered interim clarification until a comprehensive review of the medical standards contained in part 67 could be concluded.

The FAA began the review of the medical standards for airmen and of its certification practices and procedures (47 FR 30795; July 15, 1982) by requesting public comment. In addition, the FAA initiated a contract with the American Medical Association (AMA) to provide professional and technical information. The AMA presented its report, "Review of Part 67 of the Federal Air Regulations and the Medical Certification of Civilian Airmen" (AMA Report), on March 26, 1986. The public was again invited to comment on part 67 in "Announcement of the Availability of a Report" (51 FR 19040; May 23, 1986). The AMA Report detailed the results of a comprehensive review of the standards for airman medical certification and of their application. The AMA Report considered pertinent advances in the field of medicine since 1959, recommended changes in FAA medical standards and explained the rationale for such changes.

In a separate but related issue, on May 11, 1979, the Aircraft Owners and Pilots Association (AOPA) petitioned to amend § 61.23 to require medical examinations for private pilots at 36-month intervals rather than at 24-month intervals. In response to the petition, the FAA reviewed the literature, surveyed the medical practices of the Department of Defense, and considered a preliminary analysis of its own aeromedical certification data. The FAA then contracted with Johns Hopkins University to prepare a detailed statistical analysis of information collected by the FAA from annual examinations on approximately 31,000 air traffic controllers over a 15-year period. The study sample was demographically similar and broadly comparable to the private pilot

population, and the examinations were similar to airman medical examinations.

The Johns Hopkins University analysis confirmed an increasing incidence of recorded pathology with increasing age, agreeing with the data from the AMA report, but a relatively low incidence in young individuals. Reducing the frequency of medical examinations could be expected to result in an increased prevalence of undetected pathology within the system. For the younger age groups, however, this effect would be small. The Johns Hopkins analysis did not identify exact ages at which the frequency of examinations should be changed.

In response to the AOPA petition to amend § 61.23, the FAA issued on October 29, 1982, NPRM No. 82–15 (47 FR 54414, December 2, 1982) proposing to amend part 61 to revise the duration of validity of third-class privileges of airman medical certificates for operations requiring a private or student pilot certificate. As proposed by Notice No. 82–15, the requirement for a third-class medical examination would have been changed to every 5 years for the youngest pilots then increasing in frequency to the existing 2-year interval for older pilots.

On September 27, 1985, prior to the issuance of the AMA Report on its review of the airman medical standards and certification procedures in part 67, the notice proposing to amend part 61 to revise the duration of third-class airman medical certificates was withdrawn (50 FR 39619). The proposal was withdrawn, in part, because of issues raised by the medical community. In addition, a regulatory evaluation of Notice No. 82–15 suggested a slight increase in aircraft accident fatalities if the then proposed third-class medical certificate was set to 5 years for young airmen. Given the then pending issuance of the AMA Report and the possibility that the report would provide better data on which to base an evaluation of the safety concerns raised by the medical community, the FAA decided that any future consideration of examination frequency would be within the context of the outcome of the comprehensive review of part 67.

On February 26, 1986, AOPA again petitioned the FAA to revise the duration of a third-class airman medical certificate to 36 calendar months for noncommercial operations requiring a private, recreational, or student pilot certificate. The petition (Docket No. 24932) was entered in the public docket and remains open.

On September 24, 1993, AOPA once again petitioned the FAA to revise the duration of a third-class airman medical certificate to 48 calendar months for a specific trial period for noncommercial operations requiring a private or student pilot certificate. The petition (Docket No. 27473) was entered in the public docket and remains open.

Based on the FAA's review of part 67, the FAA's judgment regarding recommendations contained in the AMA Report, and on consideration of all public comments in response to previous notices, the FAA proposes to revise part 67, "Medical Standards and Certification." The proposed revision of part 67 will involve the incorporation of additions and changes to specific medical standards, the scope of examination, and the administrative procedures pertaining to airman medical certification. In consideration of pertinent advances in the field of medicine since the last significant revision of part 67, the medical standards and certification procedures that are being proposed reflect current medical knowledge, technology, and practice.

As stated in the notice withdrawing Notice 82–15, the duration of airman medical certificates was to be reconsidered after the AMA's report; however, the report provided no duration recommendation. The proposal to revise airmen standards and certifications procedures and the duration of airmen medical certificates was also addressed in a January 1992 agency rulemaking review. The results of these events supported the revision of part 67 and duration of third-class airman medical certificates. A reevaluation of all studies and data collected since 1982 supports a revision of the duration of third-class medical certificates outlined in this proposal. Accordingly, the FAA is proposing revisions to part 67 and to § 61.23 of part 61 of the FAR.

Summary of Proposed Amendments to Part 67

The following is a summary of the substantive changes proposed in this rulemaking. Because the FAA is proposing a complete recodification of part 67, this summary states both the current and proposed section/paragraph numbers.

1. Distant visual acuity requirements for first- and second-class certification are changed to delete the uncorrected acuity standards. However, each eye must be corrected to 20/20 as in the current standard. [FAR Standards: Current §§ 67.13(b) and 67.15(b); Proposed §§ 67.103(a) and 67.203(a)]

2. For third-class certification, the current 20/50, uncorrected, or 20/30, corrected, distant visual acuity standard is changed to 20/40 in each eye, with or without correction. [FAR Standard: Current § 67.17(b); Proposed § 67.303(a)]

3. For first- and second-class certification, minimum near visual acuity requirements are specified in terms of Snellen equivalents (20/40), corrected or uncorrected, each eye, at 16 inches and, after age 50, also include an intermediate standard (20/40) at 32 inches. This replaces the current standard of V=1.00 at 18 inches for first-class only. [FAR Standards: Current §§ 67.13(b) and 67.15(b); Proposed §§ 67.103(b) and 67.203(b)]

4. A near visual acuity standard of 20/40, corrected or uncorrected, each eye, at 16 inches is added to the third-class visual requirements. [FAR Standard: Current (None); Proposed § 67.303(b)]

5. Color vision requirements are amended to read: "ability to perceive those colors necessary for safe performance of airman duties," and are the same for all classes. Current standards require "normal color vision" for first-class and the ability to distinguish aviation signal colors for second- and third-class applicants. [FAR Standards: Current §§ 67.13(b), 67.15(b), and 67.17(b); Proposed §§ 67.103(c), 67.203(c), and 67.303(c)]

6. The current first-class standard pertaining to pathological conditions of the eye or adnexa that interfere or that may reasonably be expected to interfere with proper function is substituted in both the second- and third-class standards for the current standards which specify, respectively, "no pathology of the eye" and "no serious pathology of the eye." [FAR Standards: Current §§ 67.15(b) and 67.17(b); Proposed §§ 67.203(e) and 67.303(d)]

7. The "whispered voice test" for hearing is deleted for all classes. Substituted are a conversational voice test using both ears at 6 feet; an audiometric word (speech) discrimination test to a score of at least 70 percent obtained in one ear or in a sound field environment; or pure tone audiometry according to a table of acceptable thresholds (ANSI 1969). The amended standards for hearing are the same for all classes. [FAR Standards: Current §§ 67.13(c), 67.15(c), and 67.17(c); Proposed §§ 67.105(a), 67.205(a), and 67.305(a)]

8. The standards pertaining to the ear, nose, mouth, pharynx, and larynx are revised to more general terms and related to flying and speech communication. Specific references to the mastoid and eardrum are deleted. The current standard, "No disturbance in equilibrium," is changed to, "No ear

disease or condition manifested by, or that may reasonably be expected to be manifested by, vertigo or a disturbance of equilibrium." The amended standards are the same for all classes. [FAR Standards: Current §§ 67.13(c), 67.15(c), and 67.17(c); Proposed §§ 67.105(b), 67.205(b), and 67.305(b)]

9. "Psychosis," as used in the proposed regulation, refers to "a mental disorder in which the individual has manifested psychotic symptoms or to a mental disorder in which an individual may reasonably be expected to manifest psychotic symptoms." This alleviates some of the problems in interpreting the regulations created by changes in nomenclature and classification of mental conditions found in the *Diagnostic and Statistical Manual of Mental Disorders*, 3rd edition (DSM III). [FAR Standards: Current §§ 67.13(d), 67.15(d), and 67.17(d); Proposed §§ 67.107(a), 67.207(a), and 67.307(a)]

10. Substance dependence and substance abuse are defined and specified as disqualifying medical conditions. Substance dependence is disqualifying unless there is clinical evidence, satisfactory to the Federal Air Surgeon, of recovery, including sustained total abstinence from alcohol for not less than the preceding 2 years in the case of alcohol dependence. In the case of other substance dependence, recovery would include sustained total abstinence from that substance for not less than the preceding 5 years. Substance abuse, in the case of alcohol within the preceding 2 years and in the case of other substances within the preceding 5 years, is disqualifying. Alcohol dependence and alcohol abuse are included in the terms "substance dependence" and "substance abuse", respectively. [FAR Standards: Current §§ 67.13(d), 67.15(d), and 67.17(d); Proposed §§ 67.107(a) and (b), 67.207(a) and (b), and 67.307(a) and (b)]

11. "Bipolar disorder" is added as a specifically disqualifying condition. This corrects a regulatory problem created by the change in nomenclature contained in DSM III. [FAR Standards: Current (None); Proposed §§ 67.107(a), 67.207(a), and 67.307(a)]

12. The general mental standard is amended to add the word "other" before "mental." The proposed revised standard reads, "No other personality disorder, neurosis, or other mental condition * * *." [FAR Standards: Current §§ 67.13(d), 67.15(d), and 67.17(d); Proposed §§ 67.107(c), 67.207(c), and 67.307(c)]

13. "A single seizure," and "A transient loss of control of nervous system function(s) without satisfactory medical explanation of the cause," are added as specifically disqualifying neurologic conditions. [FAR Standards: Current (None); Proposed §§ 67.109(a), 67.209(a), and 67.309(a)]

14. The word "seizure," is substituted for "convulsive." [FAR Standards: Current §§ 67.13(d), 67.15(d), and 67.17(d); Proposed §§ 67.109(b), 67.209(b), and 67.309(b)]

15. "Cardiac valve replacement," "permanent cardiac pacemaker implantation," and "heart replacement" are added as specifically disqualifying cardiovascular conditions for all classes of certification. [FAR Standards: Current §§ 67.13(e), 67.15(e), and 67.17(e); Proposed §§ 67.111(a), 67.211(a), and 67.311(a)]

16. A requirement is added whereby all applicants for second-class airman medical certificates will be required to have a routine resting electrocardiogram (ECG) at the first application after reaching age 35 and every 2 years after reaching age 40. An ECG requirement currently exists for first-class applicants; however, first-class applicants must have an annual ECG after reaching age 40. There is no requirement added for third-class. [FAR Standards: Current § 67.13(e); Proposed §§ 67.111(d) and 67.211(d)]

17. The current table of age-related maximum blood pressure readings for applicants for first-class certificates and the reference to "circulatory efficiency" are deleted, and a requirement that average blood pressure while sitting not exceed 150/95 millimeters of mercury is added for applicants of all classes. A medical assessment is specified for all applicants who need or use antihypertensive medication to control blood pressure. [FAR Standards: Current § 67.13(e); Proposed §§ 67.111(b), 67.211(b), and 67.311(b)]

18. For first-class applicants only, a total blood cholesterol determination after reaching age 50 is added. A cholesterol of 300 milligrams per deciliter or more may require further evaluation although the applicant, if otherwise eligible, is issued a medical certificate pending the results. [FAR Standard: Current (None); Proposed § 67.111(f)]

19. The use of anticoagulant medication is made specifically disqualifying for applicants of all classes. [FAR Standards: Current (None); Proposed §§ 67.111(c), 67.211(c), and 67.311(c)]

20. Current § 67.19 of the FAR, Special Issue of Medical Certificates, is rewritten [Proposed FAR Standard: § 67.401(a)] to provide for, at the discretion of the Federal Air Surgeon, an "Authorization for Special Issuance of Medical Certificate" (Authorization), valid for a specified period of time. An individual who does not meet the published standards of part 67 of the FAR may be issued a medical certificate of the appropriate class if he or she possesses a valid Authorization. The duration of any certificate issued in accordance with proposed § 67.401 of the FAR is for the period specified at the time of its issuance or until withdrawal of the Authorization upon which it is based. A new Authorization is required after its expiration, and the applicant must show again that airman duties can be performed without endangering air commerce.

Proposed FAR Standard, § 67.401(b) also provides for a Statement of Demonstrated Ability (SODA) instead of an Authorization. The SODA will be issued to applicants whose disqualifying conditions are static or nonprogressive and who have been found capable of performing airman duties without endangering air commerce. The SODA authorizes an aviation medical examiner to issue a certificate if the applicant is otherwise eligible.

Proposed § 67.401(e) retains the language of current § 67.19(c) regarding consideration of the freedom of a private pilot to accept reasonable risks to his or her own person or property that are not acceptable in the exercise of commercial or airline transport pilot privileges, and consideration at the same time of the need to protect the safety of persons and property in other aircraft and on the ground.

Proposed § 67.401(f) adds language that explicitly provides that the Federal Air Surgeon may withdraw the Authorization or SODA. An Authorization or SODA may be withdrawn at any time for (1) adverse change in medical condition, (2) failure to comply with its provisions, (3) potential endangerment of public safety, (4) failure to provide medical information, or (5) the making or causing to be made of a fraudulent or intentionally false statement or an incorrect statement in support of a request for an Authorization or SODA or in any entry in any logbook, record or report that is kept, made, or used to show compliance with any requirement for an Authorization or SODA.

Proposed § 67.401(i) allows a person to request that the Federal Air Surgeon review a decision to withdraw an Authorization or SODA. The request for a review would have to be made within 60 days of the service or mailing of the letter withdrawing the Authorization or SODA. The proposed review procedures would be on an expedited basis and would provide an affected holder of an

Authorization or SODA a full opportunity to respond to a withdrawal by submitting supporting medical evidence.

21. Proposed § 67.403 amends current § 67.20 to provide for denial of an airman medical certificate if the application for airman medical certificate is falsified. Though this consequence is implied, the current regulation specifically provides only for revocation or suspension of certificates. Additionally, § 67.403 proposes to deny or withdraw any Authorization or SODA where information provided to obtain it is false, whether the statement was knowingly false or unknowingly incorrect. Finally, § 67.403(c) proposes that the making of an unknowingly incorrect statement on an application for an airman medical certificate or on a request for an Authorization or SODA is a basis for denial, revocation, withdrawal, or suspension of an airman medical certificate and the denial or withdrawal of an Authorization or SODA. The making of an unknowingly incorrect statement is not a basis for revocation or suspension of other types of certificates or ratings issued under the FAR.

22. A new § 67.415 of the FAR is proposed to provide that the holder of any medical certificate that is suspended or revoked shall, upon the Administrator's request, return it to the Administrator. The FAA practice always has been to request return of the certificate in such circumstances.

23. Where appropriate, changes are made to eliminate gender-specific pronouns, to replace "applicant" with "person," to use current position titles and addresses, to correct spelling and improve syntax, and to adjust section and sub-section references.

Summary of Proposed Amendments to Part 61

Section 61.3(c) of the FAR provides, with some exceptions, that no person may serve as pilot in command or in any other capacity as a required pilot flight crewmember unless that person has in his or her personal possession an appropriate current medical certificate issued under part 67 of the FAR. The medical standards for issuing first-, second-, and third-class medical certificates are set forth in current §§ 67.13, 67.15, and 67.17, respectively.

Section 61.23 identifies the duration of validity and privileges of each class of medical certificate. Currently, a first-class medical certificate is valid for 6 months for operations requiring an airline transport pilot certificate, 12 months for operations requiring only a commercial pilot certificate, and 24 months for operations requiring only a private, recreational, or student pilot certificate. A second-class medical certificate is valid for 12 months for operations requiring a commercial pilot or an air traffic control tower operator certificate and for 24 months for operations requiring only a private, recreational, or student pilot certificate. A third-class medical certificate currently is valid for 24 months for operations requiring a private, recreational, or student pilot certificate.

Using the John Hopkins University analysis (raw data originated from the FAA), airman certification data, and annualized pilot exposure data, a decision model was prepared for the FAA that determined the best age-specific duration plan for the third-class medical certificate population. We determined that the best plan would provide for maximum regulatory relief without public safety decrement. For further discussion of duration analysis, see this docket's copy of the regulatory evaluation at pages 25–26, 58–64, and 77–80.

Using the model and the decision criteria previously discussed, the FAA proposes to lengthen the validity period of third-class airman medical certificates for most persons under the age of 40. Persons under age 40 would be required to undergo a physical examination every 3 years for a third-class medical certificate. Third-class medical certificates for persons age 40 but less than age 70 would continue to be valid for 2 years. Persons age 70 and older would be required to undergo a physical examination every year when applying for a third-class medical certificate.

These ages and examination periods were selected because they will allow no significant increase in undetected pathology between required examinations. Regulatory and economic relief can be provided without a significant effect on aviation safety.

The FAA has determined that the frequency of routine examinations can be reduced in the case of younger airmen who are less likely to suffer medical disability and who have undergone an initial examination and certification prior to first solo flight. Those individuals manifesting conditions that represent a risk to safety will be denied certification or, after individual evaluation, will be restricted in their flying activities or examined more thoroughly and frequently, or both. Those individuals who meet the published medical standards but whose conditions require more frequent scrutiny will, under the new amendment, be issued medical certificates with a validity of 2 years rather than the longer period which they may otherwise be granted. With routine medical examination frequency increasing with age as proposed, aviation safety will be maintained.

Both the AMA report and the Hopkins' analysis confirm the greater incidence of medical pathology in older persons. FAA analysis also confirms that the incident of accidents generally increase with an increase in age. It is prudent, therefore, to leave the current routine periodic examination requirement unchanged for persons age 40 but less than age 70 and to increase the frequency of examination for persons age 70 and older.

All third-class airman medical certificates or third-class privileges of a first- or second-class medical certificate issued prior to the effective date of a final rule will remain valid for 2 years from the date of issuance unless the validity period has been otherwise limited by the FAA. The period of validity for all third-class airman medical certificates or third-class privileges of a first- or second-class medical certificate issued on or after the date of a final rule will be calculated according to the provisions of the final rule unless the validity period has been otherwise limited by the FAA.

Because of the increased public responsibilities associated with commercial pilot privileges, the FAA does not plan at this time to change the frequency of examinations for first- or second-class medical certificates for operations requiring an airline transport pilot, commercial pilot, or air traffic control tower operator certificate. Similarly, the agency does not plan now to revise the validity period of student pilot certificates, now 2 years as set forth in § 61.19, though these are usually issued in combination with the third-class medical certificate. A student pilot whose student pilot certificate has expired but whose third-class medical certificate remains valid, may obtain a new student pilot certificate from an FAA operations inspector as provided in § 61.85(b).

Section 61.53 of the FAR provides that: "No person may act as pilot in command, or in any other capacity as a required pilot flight crewmember while he [or she] has a known medical deficiency, or increase of a known medical deficiency, that would make him [or her] unable to meet the requirements for his [or her] current medical certificate." This amendment does not change § 61.53, and the FAA continues to require airmen to comply with that rule. In reducing the frequency of required periodic contacts with

knowledgeable health professionals, self-monitoring and personal attention to health become a more important part of the individual airman's responsibility for flight safety. This notice also proposes to amend § 61.39 to require that applicants must possess at least a third-class medical certificate or the third-class privileges of a first- or second-class medical certificate valid under proposed § 61.23 in order to be eligible for a flight test for a certificate, or an aircraft or instrument rating. The proposal amends § 69.39 to coincide with the duration changes in § 61.23, as discussed above.

As noted above, the FAA developed its proposal through review of the literature, survey of the medical practices of the Department of Defense, analysis of National Transportation Safety Board (NTSB) accident data and its own aeromedical certification data, consideration of the data developed by the Johns Hopkins University, and in consideration of the part 67 proposal announced in this notice. The proposed examination spacing represents the agency's view of an optimum schedule in terms of estimated detectable pathology in the airman population and of the burden of required examinations.

No change in the scope of required examinations was proposed by Notice 82–15, Duration of Medical Certificates. Where an applicant for medical certification demonstrates by history or by findings that additional or more detailed medical evaluation is required, current regulations permit the FAA to obtain it. The routine examination used for many years has proven adequate for the identification of those airmen who should be further evaluated yet places only minimum burden on that majority of persons who can be immediately certificated. Nevertheless, the FAA announced and conducted a complete review of the standards for airman medical certification (47 FR 16298, April 15, 1982 and 47 FR 30795; July 15, 1982), and examination scope was one object of the review. The larger part of this notice announces proposals related to standards and administrative procedures for airman medical certification.

History of Medical Standards

Airman medical standards have been in effect for many years. The 1938 Code of Federal Regulations (14 CFR parts 20 and 21, 1938) under the authority of the Air Commerce Act contained minimum requirements for the physical condition of airmen. The early rules did not provide for the issuance of airman medical certificates. However, they did require that an appropriate physical examination be given before a pilot could be tested for a pilot certificate. In 1942, a system for the issuance of medical certificates was adopted that provided for the issuance of first-, second-, and third-class medical certificates.

Discretion in the issuance of medical certificates has always been a feature of the FAA medical certification system. Over the years this feature has been modified but the basic provision for special issuance of a medical certificate to a person who does not meet the required medical standards has remained. To be granted a special issuance, an airman has had to demonstrate by operational experience, flight testing, special practical evaluation, or a special medical evaluation that he or she can carry out the appropriate airman duties without endangering public safety during the prescribed time period of the medical certificate.

A number of specific changes to the medical standards took effect in 1959. Electrocardiographic examination was required of first-class certificate applicants. The ECG is to demonstrate the absence of myocardial infarction and to identify other cardiovascular conditions. A second amendment provided for additional medical standards related to a person's general physical condition and nervous system. These revisions were based primarily on a study conducted by the Flight Safety Foundation, Inc. (FSF). The study proposed that the existing certification criteria be expanded to cover the following specific medical conditions:

(1) An established diagnosis of diabetes requiring insulin or other hypoglycemic treatment agents;

(2) A history of myocardial infarction or other evidence of coronary artery disease; and,

(3) A history of an established diagnosis of psychosis, severe psychoneurosis, severe personality abnormality, epilepsy, chronic alcoholism or drug addiction.

The FSF position was that the existence of any of the above conditions was an appropriate basis for disqualification for any class of medical certificate. The FSF based its recommendation on the belief, at that time, that medical prognostication for these conditions was too imprecise to provide assurance that these conditions would not interfere with the safe piloting of an aircraft. The FSF found that the likelihood of an occurrence of a partially or totally incapacitating state directly related to these conditions was so great that an airman with one of these conditions posed a potential hazard to flight safety. As a result of the FSF's recommendations, the procedures were amended to prohibit the granting of special issuances to airmen with these conditions. The Federal Aviation Act of 1958, however, provided for the granting of exemptions by the Administrator. In 1960, the FAA specified that the existing general exemption procedures applied to the medical standards.

Rapid developments in medical knowledge about the disqualifying conditions and the development of improved techniques for prediction of their risk for incapacitation led the FAA shortly afterwards to grant exemptions, with appropriate limitations, to many persons with these conditions. Though exemptions were available, requests from individuals with severe manifestations of some conditions were denied.

In 1971, the authority to grant or deny petitions for exemption from part 67 was delegated to the Federal Air Surgeon (Amendment 11–11; 36 FR 3462; February 25, 1971). This revision was designed to reduce administrative processing time and lower costs for the FAA in the granting of exemptions. The FAA granted over 3,000 medical exemptions in the ensuing years. Overall, the safety record of airmen who were granted exemptions has been at least as good as that of the general population of airmen who hold medical certificates issued under the medical standards.

In 1982, the FAA amended part 67 in several areas (47 FR 16298; April 15, 1982). First, any disqualifying condition which previously required a formal petition for exemption was permitted to be considered for certification through special issuance procedures. Second, the prerequisite agency administrative review and decision process leading to eligibility for NTSB review of denial actions was streamlined. Third, authority was delegated to the Federal Air Surgeon to place functional limitations on medical certificates. Fourth, § 67.19 was amended to state that the Federal Air Surgeon, in granting special issuances to applicants for private pilot certificates, considers the freedom of these applicants to accept reasonable risks to their person or property that are not acceptable in the exercise of commercial or airline transport privileges, and at the same time, considers the need to protect the safety of persons and property in other aircraft and on the ground. Fifth, clarifying interim cardiovascular standards were issued. Sixth, the alcoholism standard was revised to conform to the Comprehensive Alcohol

Abuse and Alcoholism Prevention, Treatment, and Rehabilitation Act of 1970. In addition to the amendments to part 67, the preamble to the 1982 final rule announced that in accordance with Executive Order 12291, Federal Regulations, the FAA would undertake an overall review of the medical standards in part 67. This total and comprehensive review was described as a major rulemaking effort that would involve obtaining the views of the medical profession and all other interested parties and result in significant revision of part 67.

Reference

Review of Part 67 of the Federal Air Regulations and the Medical Certification of Civilian Airmen; Engelberg, A.L., Doege, T.C.; American Medical Association, under contract to DOT (DTFA01–83–C–20066); March 1986.

This document is available from the National Technical Information Service, 5285 Port Royal Rd., Springfield, VA 22161 (accession numbers AD A166 464, Volume I ($31), and AD A166 465, Volume II ($53). There is also a handling charge of $3 for purchase by wire or mail. A synopsis of the 750-page, 2-volume report was published in the Journal of the American Medical Association (JAMA Vol. 255, No. 12, pp. 1589–1599) on March 26, 1986, and is available at many libraries and has been placed in Docket No. 23190.

Current Requirements—Medical Certification of Airmen

Part 67 of the FAR provides for the issuance of three classes of medical certificates. A first-class medical certificate is required to exercise the privileges of an airline transport pilot certificate. Second- and third-class medical certificates are needed to exercise the privileges of commercial and private pilot certificates, respectively.

An applicant who is found to meet the appropriate medical standards, based on a medical examination and an evaluation of the applicant's history and condition, is entitled to a medical certificate without restrictions or limitations other than the prescribed limitation as to its duration. These medical standards are currently set forth in §§ 67.13, 67.15, and 67.17 (14 CFR part 67).

An applicant for a medical certificate who is unable to meet the standards in §§ 67.13, 67.15, or 67.17 may, nevertheless, be issued a medical certificate. Procedures for granting special issuances or exemptions have always been available, and, thus, the standards have never been "absolutely disqualifying," in the sense that certification is permanently denied all who do not meet the standards.

Under § 67.19, "Special issue of medical certificates," at the discretion of the Federal Air Surgeon, acting on behalf of the Administrator under § 67.25 of the FAR, a special flight test, practical test, or medical evaluation may be conducted to determine that, notwithstanding the applicant's inability to meet the applicable medical standard, airman duties can be performed, with appropriate limitations or conditions, without endangering public safety. If this determination can be made, a medical certificate may be issued with appropriate limitations to ensure safety.

Discussion of the Proposal

The FAA proposes to amend part 67 to incorporate additions and changes in the specific medical standards and scope of examination and in the administrative procedures pertaining to airman medical certification. The FAA also proposes to recodify and partly reorganize part 67 to improve readers' accessibility to specific standards and procedural requirements. Additional changes are proposed to improve syntax and correct errors. Section and sub-section references are adjusted as necessary to reflect additions, deletions, and reorganization. Because the proposed medical standards are not meant to be exhaustive in naming all medical conditions that are disqualifying, the word "includes" rather than the word "are" is used in each section of the medical standards. Disqualifying medical conditions are not limited to those representative conditions listed in the proposed standards. Medical conditions may be identified during an examination which are related to a specific medical category of a section in the proposed standards but are not specifically named in the standards (e.g., respiratory malignancy). These medical conditions would be considered under the General Medical Condition section of the medical standards.

The proposal is based on the FAA's review of part 67, on the FAA's judgment regarding the AMA Report recommendations, and on public comment relevant to those recommendations and to the standards generally. The following discussion of the proposal presents under each subject heading a discussion of the current rule, the AMA recommendations, and the proposed rule. Also included in this preamble is a response to the comments received on the review of part 67 (Docket No. 23190).

Distant Visual Acuity

The current standards for applicants for first- or second-class airman medical certificates require that the uncorrected distant visual acuity be not poorer than 20/100 and the corrected acuity not poorer than 20/20 in each eye, separately. Applicants for third-class certificates are required to meet a standard of distant visual acuity of 20/50 or better in each eye, separately, without correction; or, if poorer than 20/50, a corrected distant visual acuity of 20/30. For third-class airman medical certification there is no standard for minimum acceptable uncorrected distant visual acuity.

The FAA practice for many years has been to grant any class certificate requested, regardless of uncorrected distant acuity, if the required minimum vision is present or achieved through conventional corrective lenses (spectacles or contact lenses), there is no evidence of significant eye pathology, and the person is otherwise eligible. For first- and second-class certification, this has been accomplished through the special issuance process.

Thousands of airmen exercising airline transport pilot, commercial pilot, private pilot, student pilot, and air traffic control tower operator certificates have demonstrated their ability to safely perform their jobs while using corrective lenses for distant visual acuity that is poorer than 20/100 in each eye.

The AMA Report recognizes that the uncorrected distant visual acuity standards for first- and second-class certification may be too stringent and recommends that they be changed from 20/100 to 20/200 without offering a rationale for the specific recommendation of 20/200. The FAA notes that this recommended standard is consistent, in part, with the standards of the International Civil Aviation Organization (ICAO).

In response to the AMA recommendation, in mid-1986, the agency simplified the procedure for special issuance of certification in cases where the applicant for a first- or second-class certificate demonstrates uncorrected distant vision worse than 20/100 but not worse than 20/200. AME's were given permission to evaluate applicants without further referral to eye specialists or to the agency for decision. In the absence of significant eye pathology, the AME may, after telephone coordination with the agency, issue any class certificate. Individuals whose distant vision is

poorer than 20/200 can be granted certification only by the FAA, after evaluation by an eye specialist. The FAA has found through experience that safety is not adversely affected by permitting medical certification at any level of uncorrected acuity. Little, if any, disqualifying eye pathology is found through the special evaluations of applicants whose vision corrects to acceptable levels, and AME's are able to identify those whose findings suggest the need for further examination by specialists. Therefore, the FAA proposes under §§ 67.103(a) and 67.203(a) the deletion of the current uncorrected acuity standard for first- and second-class certification, thereby administratively simplifying the certification process and reducing costs to airmen and to the agency. The FAA intends, however, to retain the current requirement for first- and second-class certification that distant visual acuity be, or correct to, not poorer than 20/20 in each eye separately.

For third-class certification the FAA proposes under § 67.303(a) that the standard be amended to require a distant visual acuity of not poorer than 20/40 in each eye, separately, with or without correction. This amendment eliminates the confusing current minimum acuity standard (20/30 if corrective lenses are used and 20/50 if not used) and is consistent with safety and with the standards commonly used by state automobile driver licensing authorities. It also reflects the ICAO standards for private pilots, and it includes the AMA Report recommendation for minimum distant visual acuity without correction.

Near Visual Acuity

The current near visual acuity standard for first-class medical certification is expressed as "* * * at least v=1.00 at 18 inches with each eye separately, with or without corrective glasses." The near visual acuity standard for second-class medical certification is based on the ability to pass a test showing that the applicant can read official aeronautical maps. Currently the rules for third-class medical certification have no near visual acuity requirements.

The AMA Report recommends several revisions to the near visual acuity standards. The AMA Report points out that the current vision terminology of first-class medical certification is antiquated and unfamiliar to most AME's and ophthalmologists. The AMA also notes that the Near Vision Acuity Test Card, FAA Form 8500–1, contains letters that are to be used at 16 inches while the current standards are established for 18 inches.

The AMA Report recommends the same near visual acuity standards for all three classes of medical certification: a near vision of 20/40, Snellen equivalent, at 16 inches in each eye separately, with or without corrective lenses. In addition, the AMA Report recommends, at age 50 or older, a near vision standard of 20/40, Snellen equivalent, at both 16 inches and 32 inches in each eye separately, with or without corrective lenses.

Additional requirements are imposed after age 50 because, with age, the eye loses the ability to accommodate for close viewing distances, a condition called "presbyopia." The AMA Report states:

> It is important while piloting to be able to see clearly at close distances, as when looking at maps, and at intermediate distances, as when viewing the instrument panel. This is especially important in night flying. Diminished intermediate visual acuity due to presbyopia in an individual 50 years of age or older may be further compromised by bifocal correction. Trifocal or progressive power lenses may be necessary for clear vision at distance, intermediate, and near.

The AMA Report recommends that the appropriate necessary corrective lenses must be worn while exercising the privileges of the certificate.

The proposed rule at §§ 67.103(b) and 67.203(b) follows the AMA Report recommendations except that a standard for intermediate visual acuity is not proposed for third-class medical certification (see proposed § 67.303(b)). Also, the proposed rule would require only that the corrective lenses be available while exercising the privileges of the certificate.

The FAA is not proposing an intermediate visual acuity standard for third-class certification in recognition of the lower level of responsibility inherent in noncommercial flight operations.

The proposal does not require that corrective lenses for near or intermediate visual acuity be worn during all flight operations because this is a matter better left to the discretion of the pilot. FAA practice and the FAR currently permit airmen to exercise their certificates when any required corrective lenses for near vision are in their possession. This permits, at the airman's option, use of separate near and distance spectacles; contact lenses for distance with the addition of spectacles for near; unifocal contact lenses that correct for both near and distance; bifocal spectacles; or continuously variable focus spectacles. If the airman requires correction only for near vision, spectacles, half-spectacles, or bifocal spectacles without power in the distance portion may be used.

From among these options, an airman should be able to choose his or her method of visual correction while piloting an aircraft. A requirement that all airmen wear their correction for near vision while flying would significantly and, in the absence of demonstrated problems, unnecessarily limit their choice of visual aids. The FAA has no evidence that significant operational problems are occurring with the use of corrective lenses for near vision. Therefore, the proposed requirement for corrected intermediate vision in older airmen can be met through possession of additional spectacles of the appropriate power or by use of trifocal lenses or lenses of continuously variable focus, as desired.

Color Vision

The current standards for first-class medical certification require "normal color vision" (§ 67.13(b)(3)); second- and third-class certification require "ability to distinguish aviation signal red, aviation signal green, and white." (§§ 67.15(b)(5) and 67.17(b)(3)).

In current practice, applicants for certification are tested by use of standard pseudoisochromatic plates or by other approved devices. A passing score defines the applicant as not color deficient. Failure indicates a color deficiency and requires that any certificate issued be limited, prohibiting flight at night or by color signal control. This limitation can, however, be removed through the successful completion of a practical signal light test or of a medical flight test, as appropriate for the class certificate sought and the level of aviation experience of the applicant.

Airmen are routinely granted second- or third-class medical certificates without restriction if they pass the signal light test. When they have the experience required for an airline transport pilot certificate and pass the medical flight test, first-class certification is granted. An experienced airman rarely fails a medical flight test given for deficient color vision.

Safety is further enhanced by the thorough training and testing given airmen seeking authorization to pilot new aircraft. Through use of actual aircraft or of simulators, instructors, check airmen, and flight inspectors have an opportunity to identify and, if necessary, recommend restrictions for those individuals who encounter difficulty with color.

The AMA Report states:

* * * the hazard to aviation safety of anomalous color vision is not clear. No studies have shown that color deficiency has been a direct cause of accidents. On the other hand, color is an important constituent of aircraft devices such as instrument panel gauges and warning lights, and of airport landmarks, such as beacons and runway lights.

The AMA Report recommends that testing for color vision remain part of the routine periodic examination of airmen. The suggested standards include the retention of "normal color vision for first-class certification and "ability to distinguish aviation signal red, aviation signal green, and white" for third-class certification. The AMA Report suggests, however, that the standard for second-class certification be changed to that for first-class. The AMA Report notes an increasing use of color in instrument displays for advanced aircraft but less frequent use of colored signal lights in today's flight environment. Despite these diverging trends and the absence of accident data, prudence dictates some continued concern for the color perception of airmen.

The FAA, therefore, proposes at §§ 67.103(c), 67.203(c), and 67.303(c) that testing at the time of the periodic medical examination be continued as recommended, but that the standard for all classes of certification be, "Ability to perceive those colors necessary for the safe performance of airman duties." The standard is consistent with that of the ICAO and reflects the agency's experience and practice for many years. Tests, instructions, and scoring criteria are provided to AME's in the "Guide for Aviation Medical Examiners."

Certification relative to deficient color vision ultimately is based on performance. It is appropriate, therefore, that the standard be related to the job requirement and that it be the same for each class of medical certificate.

Other Pathology of the Eye

The current standard is worded differently for each class of certification but without significant difference of meaning. In accordance with the AMA recommendations, therefore, revision is made to correct the spelling of the plural word "adnexa" and to provide for the same standard for all classes of certification, at proposed §§ 67.103(e), 67.203(e), and 67.303(d).

Eye Fusion

This standard, which applies only to first- and second-class certification, is revised to correct spelling and to eliminate gender-specific pronouns. No substantive revisions are proposed for this standard. (See proposed §§ 67.103(f) and 67.203(f)).

Intraocular Pressure

The AMA Report recommends for all three classes of certification the measurement of intraocular pressure after the age of 40 to identify glaucoma. The basis for this recommendation is that glaucoma may appear in two forms. One, closed-angle glaucoma, is acute, painful, and potentially impairing; the other, open-angle glaucoma, is subtle, painless, and progressive. Either form can be destructive to vision. Since, in many cases, open-angle glaucoma is not noticed by the individual until after permanent changes in visual fields have occurred, a search for it should be a part of any routine health maintenance examination.

Current regulations have no standard for intraocular pressure, however, and the FAA is not proposing standards at this time. While the recommendations of the AMA Report suggest that everyone might benefit from regular measurement of intraocular pressure, the risk to flight safety appears minimal in comparison to the cost and difficulty of testing.

Hearing

Current standards for hearing are as follows: (1) for first-class medical certification the person must be able to hear the whispered voice at 20 feet with each ear separately or demonstrate a hearing acuity of at least 50 percent of normal in each ear as shown by a standard audiometer; (2) for second-class certification, the person must be able to hear the whispered voice at 8 feet in each ear separately; and (3) for third-class certification, the person must be able to hear the whispered voice at 3 feet in one ear. The use of the whispered voice has raised questions of accuracy and validity in the aviation environment. Pure tone audiometry is considered a more scientific and accepted method for determining hearing capabilities and for documenting changes in that capability over a period of time. The present procedure, however, has served well in enabling AME's to identify for referral and evaluation those individuals whose hearing acuity is less than normal.

Testing accomplished by the AME serves as a screen to identify those individuals who should receive more specialized initial and periodic future evaluations. Almost all hearing-impaired applicants, however, receive special issuance of a certificate after documentation of their condition. Many undergo practical testing to determine their functional aviation capabilities. In the absence of other significant pathologic conditions, the certification decision regarding hearing relates only to the individual's ability to safely exercise airman privileges. Medical flight tests are used frequently for this determination, and the subject may use hearing aids, if necessary. Though an airman may regularly use a hearing aid for activities not involving flight, the normal aircraft communication equipment may serve as well, and the agency does not, in such cases, mandate the wearing of an aid. Special issuance is possible, especially for applicants for third-class medical certification, in the presence of total deafness. Restrictions on the exercise of airman privileges are applied to maintain safety in cases of total or functionally significant deafness, and agency experience demonstrates that these practices have been successful and appropriate.

The AMA Report recommends that speech discrimination be the basic screening examination used for certification for all three classes. If sound field or speech testing audiometry equipment is unavailable, pure tone audiometry is offered as an alternative. Speech testing would be accomplished either binaurally or monaurally, while pure tone audiometry would apply a "better ear" and "poorer ear" standard. The AMA Report suggests individual consideration when an applicant fails the standard tests.

The FAA agrees with the AMA Report that the standards for hearing and for testing should be the same for all classes of medical certification.

However, it is unlikely that equipment appropriate for speech discrimination testing, as proposed by the AMA Report, will be available to all AME's. In keeping with the intention of the AMA Report and in the interest of cost, availability, simplicity, and functional adequacy, the FAA believes and, therefore, proposes at §§ 67.105(a), 67.205(a), and 67.305(a) that the basic screening test administered to all applicants be a spoken voice test. This test is included as part of Hearing Requirement No. 1 and Hearing Requirement No. 2, Chapter 6.—Medical Requirements, Personnel Licensing, International Standards and Recommended Practices, Annex 1 to the Convention on International Civil Aviation, ICAO. It has been implemented in many countries and is easily described and administered. The conversational voice test is not inconsistent with the AMA Report emphasis on speech discrimination. The proposed standards would require that a person be able (1) to hear an average conversational voice in a quiet room,

using both ears, at a distance of 6 feet; (2) understand speech by audiometric speech discrimination testing to a score of at least 70 percent obtained in one ear or in a sound field environment; or (3) provide acceptable results of pure tone audiometric testing in accordance with a table that is provided in the rule.

Audiometric speech discrimination or pure tone audiometric testing are proposed as alternatives or for the further evaluation of individuals who show reduced hearing acuity in the conversational voice test. The proposed standard would apply to the examination of applicants without use of their hearing aids. Need for these devices to meet the standard suggests that a more detailed evaluation is appropriate before certification, and that special issuance with periodic reevaluation may be necessary.

Ear, Nose, Throat, and Equilibrium

In addition to hearing (discussed above), current ear, nose, throat, and equilibrium standards specify: no acute or chronic disease of the middle or internal ear; no disease of the mastoid; no unhealed perforation of the eardrum; no disease or malformation that would interfere with or be aggravated by flying; and no disturbance in equilibrium.

The AMA Report recommends, for all three classes, a change of the standard to specify, "No acute or chronic disease of the middle or internal ear that will cause acute paroxysms or unpredictable attacks of vertigo." Also, the AMA Report recommends an additional standard that specifies, "No disease or malformation of the oral cavity, pharynx, or larynx that would interfere with clear and effective speech communication." All other standards in the current rule would be deleted.

For the most part, the proposed rule at §§ 67.105(b), 67.205(b), and 67.305(b) follows the AMA Report recommendations. It requires that there be no "disease or condition of the middle or internal ear, nose, oral cavity, pharynx, or larynx" that will interfere with or be aggravated by flying or that will interfere with clear and effective speech communication. In addition, in the proposed rule at §§ 67.105(c), 67.205(c), and 67.305(c) there may be no disease or condition that may involve vertigo or a disturbance of equilibrium.

Current standards reflect specific concerns about infections of the ear and mastoid and the damage caused by such infections to the ear drum and middle ear. The proposed standards more generally and properly address diseases, or conditions of the ear, nose, or throat that may interfere with speech communication or equilibrium, factors that are important for safety.

Mental

Mental disorders may adversely affect judgment and behavior in ways that create potential hazards in aviation. The current standards for all three classes of airman medical certification, therefore, list certain psychiatric disorders for which medical certification would be denied. The list was derived from the recommendations made by the Flight Safety Foundation in 1959. These disorders are considered to constitute a definite hazard to safety in flight when determined to be present in an airman by established medical history or by clinical diagnosis. As listed in the current regulations, any of the following disorders is a cause for denial: (1) a personality disorder that manifests itself in overt acts; (2) a psychosis; (3) alcoholism; and (4) drug dependence. In addition, the current standards provide for denial of medical certification in the presence of any "other personality disorder, neurosis, or mental condition that the Federal Air Surgeon finds makes the applicant unable to safely perform the duties or exercise the privileges of the airman certificate that he holds or for which he is applying; or may reasonably be expected, within two years after the finding, to make him unable to perform those duties or exercise those privileges."

The mental standards have been well accepted by the public and by the medical community as practical and effective. However, with publication of the authoritative reference, Diagnostic and Statistical Manual of Mental Disorders, Third Edition (DSM III), changes in the diagnostic terminology and classification of mental disorders have caused some confusion. Major illnesses, previously included in the category of "psychosis," are separately described in the DSM III and are, therefore, no longer considered by some others as covered under the term "psychosis" in the FAR. Since these conditions are of concern in the context of airman medical certification and flight safety, the agency must amend the mental standards to clarify the position of the FAA.

The AMA Report recommends amendment of the regulations to include a more extensive and specific list of disqualifying mental disorders: substance abuse or dependence; schizophrenic disorders; paranoid disorders; psychotic disorders; major affective disorders (including bipolar disorders and depression); anxiety disorders; dissociative disorders; impulse disorders; disorders first evident in infancy, childhood, and adolescence; and organic brain syndrome.

The proposed rule at §§ 67.107 (a) through (c), 67.207 (a) through (c), and 67.307 (a) through (c) would include all of these disorders but would not specifically list them. The current and proposed mental standard lists a psychosis as a disqualifying disorder. The proposed standard states that "psychosis" refers to "a mental disorder in which the individual has manifested psychotic symptoms or to a mental disorder in which an individual may reasonably be expected to manifest psychotic symptoms." In this way, two types of persons would be disqualified under this standard: those who have manifested psychotic symptoms; and those who have not had psychotic symptoms but whose mental condition is one in which psychotic symptoms may reasonably be expected to develop. Psychotic symptoms are characterized by a failure to maintain adequate contact with reality. The failure to maintain adequate contact with reality results in or may reasonably be expected to result in the impairment of judgment, including bizarre, grossly disorganized behavior; out of control behavior; delusions; or hallucinations. "Psychosis" would include schizophrenic disorders, paranoid disorders, and other disorders such as mood disorders, that sometimes manifest psychotic symptoms. Also included would be such conditions as schizotypal and borderline personality disorders. Other disqualifying disorders listed in the AMA Report that are not specifically listed in the proposed rule, such as anxiety disorders and impulse disorders, may be disqualifying under the general mental provisions of the regulations as they are now, depending on the severity of the disorders. The particular circumstances of each individual history and medical condition are considered by the FAA in determining whether such history or condition is disqualifying.

The FAA also proposes, as recommended in the AMA Report, that bipolar disorder be added to the list of disqualifying conditions. Previously called manic depressive psychosis, this common, major affective disorder now is separately classified by DSM III and may include individuals who have manifested only mania. Bipolar disorder is not specifically referenced in current part 67. In consideration of potential risk to flight safety, individuals with this diagnosis are rarely granted certification. Those few individuals who are determined to be eligible for certification through the special

issuance provisions of the FAR must be followed closely for relapse and recurrence of symptoms. By including the new terminology, the standards will clearly reflect the agency's concern about this disorder. (Discussion of how a proposed disqualifying condition may affect a current medical certificate appears under "Additional Standards for Disqualification.")

Substance Abuse/Dependence

Additional proposed changes in the mental standards for airmen are influenced by DSM III nomenclature for conditions involving dependence on or abuse of alcohol, drugs, or other chemical substances. Current regulations list as disqualifying "alcoholism" and "drug dependence." The AMA Report points out that DSM III eliminates the term "alcoholism" and substitutes the diagnosis of "substance dependence" and "substance abuse." As disqualifying conditions, the AMA Report recommends "substance abuse, substance dependence and related substance use disorders, including but not limited to those associated with alcohol; barbiturates; other sedative/hypnotics; muscle relaxants; anxiolytics; opioids; central nervous system stimulants such as cocaine and amphetamines; and hallucinogens such as phencyclidine, cannabis, and volatile solvents and gases."

The proposed rule differs from the AMA recommendations in that (1) "barbiturates" are not specified separately since they would be included with "sedatives and hypnotics;" (2) the phrase "and similarly acting sympathomimetics" would be added to the grouping of "cocaine" and "amphetamines;" and (3) "phencyclidine or similarly acting arylcyclohexylamines," "cannabis," and "volatile solvents and gases" are listed separately rather than grouped under "hallucinogens." Additionally, the phrase "related substance use disorders," as proposed, but not defined in the AMA Report, is not included in this proposal.

The proposed standard defines "substance dependence" and "substance abuse." A medical history or clinical diagnosis of "substance dependence" would disqualify a person for a medical certificate under the standards unless there is evidence of recovery satisfactory to the Federal Air Surgeon. The proposed changes also are intended to provide specific regulatory medical standards for excluding from aviation a person who, though not substance dependent, has abused alcohol within the preceding 2 years or other substances within the preceding 5 years. These proposed standards respond to the AMA Report as well as to national concerns about substance abuse. These standards would enhance the agency's ability to examine and to exclude, where medically appropriate, those airmen who have abused a substance within the time frames stated above or who have a medical history or a clinical diagnosis of substance dependence. The proposed mental standard retains, however, current language that permits medical certification under the standards upon presentation of acceptable evidence of recovery and a specified period of abstinence in the case of alcohol dependence. The proposed rule provides that clinical evidence of recovery would include sustained total abstinence from alcohol for not less than the preceding 2 years in the case of alcohol dependence, and in the case of other substance dependence, sustained total abstinence from the substance for not less than the preceding 5 years. The time periods for sustained total abstinence are based on the AMA recommendations. Other factors considered in determining recovery include the natural history and severity of the problem; the period of satisfactory recovery since manifestation of the problem; any treatment, as well as any continuing requirements for treatment, and its nature; any current or recent psychiatric symptoms, aberrant behavior, or psychiatric or other medical findings; the need for or use of chemical agents; any personality traits or other recognized factors involving the risk of future recurrence of the problem or the risk of other adverse events; the period of the person's abstinence from the substance or substances; the number of times treatment was sought and relapse occurred; the quality of the final treatment effort; the presence of residual medical complications, especially neurologic manifestations; progress in marital, social, vocational, and educational areas, as appropriate, since rehabilitation began; commitment to rehabilitation by virtue of continuing contacts with social or professional agencies, or both, and their opinions and recommendations; and the findings of recent psychiatric and psychologic evaluations, if appropriate.

The proposed definition of substance abuse includes two criteria (the first relates to alcohol, the second to other substances) that state a person would be disqualified if he or she demonstrated recurrent use of a substance in situations in which that use was physically hazardous. At least one of the uses would have to have taken place within the preceding 2 years in the case of alcohol or 5 years in the case of other substances. Under this criterion, use in physically hazardous situations need not involve the same substance or substances.

A third criterion states that a person who used a prohibited drug as that term is defined in part 121, appendix I of the FAR would be disqualified. The prohibited drug use would have to have taken place within the preceding 5 years. "Prohibited drugs" as defined in the FAR do not include all substances; however, "substances" as defined in this proposal do include all prohibited drugs. Alcohol, for example, is a substance which may be abused but is not a prohibited drug as that term is defined under appendix I of part 121.

A positive drug test result for a prohibited drug is one type of evidence of use. The FAA recognizes that the probative value of a drug test result varies depending on several factors, including the type of test, circumstances under which the test was conducted, and other corroborative evidence of drug use. The FAA considers a positive drug test conducted under any rule or internal program of the Department of Transportation (such as the FAA program required by §§ 121.457 and 135.251 or any other Administration within DOT) to be compelling proof of the use of a prohibited drug for which the drug test was positive.

With respect to positive drug tests other than those conducted under rules or internal programs of the Department of Transportation, the FAA would evaluate such test results and the surrounding circumstances on a case-by-case basis to determine the weight to be accorded them. If one of these tests is positive for substance use, the individual could be disqualified under the criteria used in the definition of substance abuse or substance dependence.

A fourth substance abuse criterion states that an individual is medically disqualified if he or she misused a substance that is found by the Federal Air Surgeon to make the person unable to safely perform the duties or exercise the privileges of the airman certificate applied for or held; or may reasonably be expected, within 2 years after the finding, to make the person unable to perform those duties or exercise those privileges. The finding of the Federal Air Surgeon is based on the case history and appropriate, qualified medical judgment. Again, as in the two previous criteria the misuse must have taken place within the preceding 2 years in the case of alcohol or 5 years in the case of other substances.

As with the current regulation, certification before completion of the 2- or 5-year abstinence/recovery period is possible under the special issuance provisions of the FAR if an individual evaluation demonstrates that the applicant is able to perform airman duties without endangering public safety.

Neurological Conditions

Current regulations on neurological conditions list as disqualifying for all three classes anyone with a history or clinical diagnosis of epilepsy or disturbance of consciousness without satisfactory medical explanation of cause. Nor may a person have any other convulsive disorder, disturbance of consciousness, or neurological condition that the Federal Air Surgeon finds makes the person unable to perform airman privileges safely, or may reasonably be expected, within 2 years after the finding to make the airman unable to perform airman privileges.

A detailed discussion of neurological conditions, their evaluation, and prognosis is provided within the AMA Report. Additional information and recommendations are contained in "Neurological and Neurosurgical Conditions Associated with Aviation Safety," a major report prepared in 1979 by representatives of the American Academy of Neurology and the American Association of Neurological Surgeons through an earlier contract between the FAA and the AMA. Neither report proposes detailed, objective criteria and tests that could be included in the standards and by which medical certification could be determined. They discuss the medical techniques now available for evaluation of individual airmen and the significance of the results obtained from their use.

Both reports emphasize the significance of seizure disorders. The few changes to the standards suggested by the AMA Report are proposed by the FAA at §§ 67.109, 67.209, and 67.309, for all three classes of airman medical certificates and include the addition of "a single seizure" to the list of disqualifying conditions; the use of "seizure" rather than "convulsive" to describe disorders that may be found disqualifying by the Federal Air Surgeon; and the addition of a "transient loss of control of nervous system function(s) without satisfactory explanation of the cause" as a specific basis for disqualification. This last proposed addition clarifies the agency's aeromedical concern about such events whether or not they are characterized as disturbances of consciousness. (Discussion of how a proposed disqualifying condition may affect a current medical certificate appears under "Additional Standards for Disqualification.")

Other neurological conditions described in the AMA Report, though of significance in questions of aeromedical certification, are not proposed as separate standards. The proposed regulatory provisions provide an adequate medical basis for assuring safety.

The AMA Report recommended that an abbreviated mental examination of four questions be included in each airman medical certification examination. If one or more responses are incorrect, the Mini-Mental Status Examination of Folstein, Folstein and McHugh (Folstein) would be given. The FAA studied the feasibility of the AMA Report's recommendation. It found that neither the AMA-recommended test nor the test by Folstein provides a useful screening device, alone or in combination, for airman neurological status. There was an unacceptable incidence of false negatives. Additionally, neither test, alone or in combination, provides predictors of any skills known to be relevant to piloting.

Cardiovascular Conditions

To meet its statutory responsibility to ensure public safety, on May 17, 1982 (47 FR 16298; April 15, 1982), the FAA amended part 67 of the FAR in part to clarify the cardiovascular standards. This change codified FAA policy that individuals with a history of coronary heart disease not be medically certificated for the exercise of airman privileges under §§ 67.13, 67.15, or 67.17. These individuals would continue to be certificated through the discretionary special issuance procedures after a separate determination that their disease no longer represents a risk to aviation safety. During that rulemaking procedure, a number of commenters expressed the belief that the cardiovascular standards for medical certification should be relaxed. Commenters also suggested that those standards be revised to set forth more detailed, objective criteria and tests by which medical certification could be determined, and a group of concerned pilots submitted a petition for rulemaking (to be discussed later in this document) that was intended to accomplish such a revision. Many commenters contended that the standards failed to take into account the advances in medicine that had occurred since part 67 was issued. The FAA announced that these issues would be addressed in its review of part 67.

Accordingly, the FAA specifically asked the committee of consultants assembled by the AMA to review the cardiovascular standards in light of recent advances and current concepts in cardiovascular medicine. Further, the FAA asked the physicians to develop suggestions for inclusion of diagnostic and prognostic techniques in the standards, if appropriate and feasible. The final AMA Report, however, indicates that the group could not establish, in the standards, qualifications for medical certification. Instead, the AMA Report suggests general retention of the current cardiovascular standards and format with additions to further improve their utility for ensuring aviation safety. In the presence of known cardiovascular disease, certification decisions still would require professional evaluation of multiple medical factors rather than verification of the results of a test specified in the published standards. The individual airman who fails to meet the published standards would continue to be considered in accordance with the discretionary special issuance provisions.

The AMA Report does recommend a number of changes. Additional cardiac conditions are suggested for inclusion in the standards as rendering an airman unqualified for certification; revised standards for acceptable blood pressure are given; maximum levels of blood cholesterol are proposed for some commercial airmen; and routine periodic electrocardiography for all airmen is recommended. Rather than changes to the standards, the AMA Report emphasizes the need for careful evaluation of all applicants prior to certification. Where individuals are found either to have cardiovascular disease or to have factors or findings indicative of increased risk, more exhaustive evaluations are suggested before certification can be granted and before periodic renewal of certification. Recommendations for these evaluations are included in the AMA Report and are generally consistent with long-standing FAA practice.

Coronary Heart Disease

The FAA proposes that the present standards pertaining to coronary heart disease and its manifestations remain unchanged. As amended in 1982, these standards are clear and have provided a firm medical basis for denying airman privileges to individuals with significant, active coronary heart disease who might endanger public safety. This condition precludes routine airman medical certification because it is a documented cause of in-flight pilot

incapacitation, and it is progressive in nature.

The FAA will continue to evaluate airmen who fail to meet this standard to determine their eligibility for a discretionary special issuance of medical certification. Certification will be based upon acceptable evidence that the individual has recovered and that his or her anatomic and physiologic cardiac status would justify the subsequent exercise of airman privileges. Appropriate functional limitations of airman privileges may be applied, and periodic follow-up medical reevaluations may be required to detect any relapse or progression of disease. This procedure protects the public while providing a means of relief for those individuals whose heart disease has stabilized sufficiently to pose an acceptable risk. Since adoption of the amendments in 1982, an increasing number of airmen have been found eligible and granted certification.

Additional Standards for Disqualification

The FAA also proposes additions to the standards in proposed paragraphs (a) (4), (5), and (6) of §§ 67.111, 67.211, and 67.311, providing that a history or clinical diagnosis of cardiac valve replacement, implantation of a permanent cardiac pacemaker, or heart replacement would make the subject person unqualified for certification under the standards. These amendments are consistent with the AMA Report and the opinions of agency consultants and reflect the serious nature of each of the conditions. Among the agency's concerns are failure of prosthetic heart valves, pacemaker malfunction or progression of underlying disease that has required artificial cardiac pacing, organ rejection, or the complications of immunosuppression. While the FAA may determine that an airman with a history or clinical diagnosis of any of these conditions may be granted a discretionary special issuance of certification, such history would preclude certification until specialized medical evaluation confirms adequate recovery and function and the absence of significant risk in terms of the aviation environment. Where special issuance of certification is granted, the regulations will provide for periodic medical reevaluations, if appropriate, for subsequent certification.

Under the proposed medical standards, a small number of airmen, who currently hold certificates as a result of an order of the NTSB, would become disqualified from further medical certification because of the addition of specifically disqualifying medical conditions. These airmen had been denied medical certification by the FAA under a current general medical standard. Under the general medical standards, an individual is denied certification by the FAA when he or she has a condition which the Federal Air Surgeon finds may reasonably be expected to make the individual unable to safely perform pilot duties. For example, the FAA has denied certification to airmen who have had cardiac valve replacement and the NTSB has ordered certification in some of these cases. Under the proposed standards a medical history of cardiac valve replacement would be specifically disqualifying and those airmen would no longer be entitled to certification. It is expected, however, that the possible certification of such individuals would be reviewed under the Federal Air Surgeon's special issuance authority once the FAA evaluates the case and is satisfied with the airman's condition since the NTSB ordered certification. Such a disposition of these cases would be consistent with the FAA's practice after the 1982 amendment of the cardiovascular standards rendered several airmen disqualified whose certification under the old medical standards had been ordered by the NTSB.

Other AMA Recommendations

The AMA Report also suggests that certain other cardiac diagnoses be added to the standards as specific disqualifications. FAA certification experience, however, has not indicated a need for regulatory change in cases of cardiomyopathy, congenital heart disease, valvular heart disease or murmurs, pericarditis, or disturbances of heart rhythm or conduction. The agency agrees with the AMA Report that these conditions pose a potential risk but has found that the existing standards and procedures provide adequate opportunity for identification and evaluation of the affected airmen and a regulatory basis for denial of airman privileges, if appropriate.

Electrocardiography

Current standards require that applicants for first-class medical certificates submit a resting, 12-lead ECG at the time of their first examination after reaching age 35 and, annually, after reaching age 40. They must show by these ECG's, "an absence of myocardial infarction." An ECG made within the 90 days before an examination for a first-class medical certificate is accepted as meeting the requirement. There now is no routine requirement for submission of ECG's by applicants for second- or third-class medical certificates.

The AMA Report notes that it is well established that up to 20 percent of myocardial infarctions ("heart attacks") fail to produce symptoms that bring a person to a physician. The resting ECG often shows evidence of a prior myocardial infarction and patterns of anatomic change and other abnormalities that are also associated with an increased risk of coronary artery disease. The AMA Report adds that many of the most common alterations of cardiac conduction seen on the routine ECG are not associated with symptoms or with easily discerned physical findings. Yet, each of these electrocardiographic findings causes special concerns regarding medical certification and may result in recommendations for additional assessment.

The AMA Cardiovascular Committee, in recognition of these facts, recommended that the requirement for electrocardiography be modified in an effort to increase the assurance that significant cardiac disease in pilots will be detected. The committee suggested that, in addition to the current requirement for first-class certificates, an ECG be made on all applicants for medical certification at the time they first apply. These ECG's would serve as a valuable medical baseline for future comparison. Further, the committee recommended that an ECG be made on applicants for second-class medical certificates at ages 35 and 40 years and every 2 years thereafter, and on applicants for third-class certificates at age 40 years and every 6 years thereafter. The committee also suggested that the standard be modified to include the agency's concern for any clinically significant electrocardiographic abnormality rather than the current limited specification of myocardial infarction alone.

In proposed § 67.211(d), all applicants for second-class airman medical certification would be required to submit ECG's at the first examination after reaching age 35 and, biennially, after reaching age 40. There is reciprocity between the first- and second-class cardiovascular standards in satisfying the "after reaching the 35th birthday" and the "after reaching the 40th birthday" ECG requirements. For example, an application with an ECG that satisfies the "age 35" ECG requirement for first-class medical certification also satisfies the "age 35" ECG requirement of an application for second-class medical certification and vice versa. In the case of the "after reaching the 40th birthday" ECG

requirement, however, the time provisions of §§ 67.111(d)(3) and 67.211(d)(3), as discussed below, are also required for reciprocity.

The proposed time provision for the "after reaching the 40th birthday" periodic ECG for first-class medical certification requires that an applicant submit an ECG with the application unless, within the preceding 9 months, an ECG was provided as part of an application for medical certification. That is, if an applicant has submitted an ECG as part of an application for airman medical certification within 9 months of the current application, the applicant does not have to submit another ECG for the current application. Thus, after reaching the 40th birthday, a person who maintains a first-class medical certificate would be required to have an ECG at alternate applications or approximately every year. In a few cases, it could be 1 year and 3 months between first-class ECG's. The time provision for the "after reaching the 40th birthday" periodic ECG for second-class medical certification is the preceding 15 months. An applicant maintaining a second-class medical certificate would be required to have an ECG at alternate applications or approximately every 2 years. In a few cases, it could be 2 years and 3 months between ECG's. The proposed requirement for first-class medical certification allows more leeway than the current rule. An applicant with a first-class medical certificate could wait up to 9 months and the ECG of the previous application for a first-class medical certificate would meet the requirement for the succeeding application for a first-class medical certificate. An applicant with a second-class medical certificate could wait up to 15 months and the ECG of the second-class medical certificate would meet the requirement for the succeeding application for second-class medical certification. No ECG requirement is being proposed for third-class medical certification.

To ensure the currency of an ECG, the FAA proposes in §§ 67.111(e) and 67.211(e) that if a person is required to submit an ECG as part of an application for medical certification, it must be dated no earlier than 60 days before the date of the application it is to accompany and must be performed and transmitted according to acceptable standards and techniques. Of course, there is no requirement to submit an ECG with a current application for medical certification if a previous ECG submitted as a part of an application for medical certification can satisfy any current ECG requirement. Sixty days is a longer period than the 30 days recommended by the AMA Report but represents a reduction from the 90 days now permitted. The agency recognizes that many ECG's are provided by employers or through private physicians other than the AME, and a reasonable period, such as that proposed, is appropriate for the airman's convenience. Finally, the FAA did not propose a baseline ECG be performed for either first- or second-class medical certificate applicants because it had a negative cost analysis and the FAA considers the ECG after age 35 to serve as an adequate baseline ECG.

The FAA also proposes to amend the wording of the standard to require that the affected person "demonstrate an absence of myocardial infarction and other clinically significant abnormality on electrocardiographic examination." The FAA will continue to require electrocardiography or other appropriate evaluations for any airman whose medical history or findings suggest it.

Blood Pressure

The current medical standard pertaining to blood pressure applies only for first-class medical certificates. Depending on the person's age and the scope of the examination accomplished, blood pressures from 140 to 170 mm Hg pressure, systolic, and 88 to 100 mm Hg pressure, diastolic, are permitted. In practice, 170 mm Hg systolic and 100 mm Hg diastolic have been considered the maximum allowable pressures for all applicants for second- and third-class certificates. The ICAO standard provides only that the blood pressure of all airmen be "within normal limits."

In addition, § 67.13(e)(5) of the FAR provides that, "if an applicant is at least 40 years of age, he must show a degree of circulatory efficiency that is compatible with the safe operation of aircraft at high altitudes."

It is rare for an applicant for certification to manifest hypertension (high blood pressure) at the level of the current standard or above. Current and accepted medical practice for several years has reflected knowledge of the adverse effects of even mild elevations of blood pressure and treatment is prescribed for most individuals at levels of blood pressure much lower than the FAA standard for medical certification. If any person is taking medication for hypertension, FAA practice is to consider the condition as coming under the provisions of present § 67.13(f)(2), *General medical condition*, of the FAR. This section directs that the applicant have "no other organic, functional, or structural disease, defect, or limitation that the Federal Air Surgeon finds makes the applicant unable to safely perform the duties or exercise the privileges of the airman certificate that he holds or for which he is applying; or may be reasonably expected, within 2 years after the finding, to make him unable to perform those duties or exercise those privileges; * * *" Certification is conditioned on the findings of a more detailed medical evaluation, including an assessment of cardiovascular risk factors, the presence or absence of disease of "target" organs, the degree of blood pressure control, and of the medication itself.

The AMA Report recommends that the existing, outmoded standard for blood pressure be replaced. It suggests a sitting blood pressure standard of 150 mm Hg pressure, systolic, and 95 mm Hg pressure, diastolic, for all pilots. It further recommends that the systolic level never exceed 160 mm Hg, regardless of the diastolic blood pressure. The AMA Report notes that its recommendations represent a somewhat less rigid standard for younger airmen and a more rigid standard for older airmen. Less rigid standards for the younger airmen are appropriate in terms of safety. For older airmen the more rigid standards respond to data demonstrating the adverse medical significance of the high level of blood pressure permitted by the current standard.

The FAA agrees that the existing standard relating to blood pressure is outmoded and does not reflect current medical knowledge or practice. It also finds that current § 67.13(e)(5) is medically vague and does not serve a useful purpose. Accordingly, it proposes that the provisions of § 67.13(e) (4) and (5) of the FAR, including the table, be deleted and replaced by new standards (proposed §§ 67.111(b), 67.211(b), and 67.311(b)) applicable to all classes of medical certificates. It proposes that average blood pressure while seated not exceed 150 mm Hg, systolic, or 95 mm Hg, diastolic. For ease of application, the agency will not introduce into the standard the additional suggestion that the systolic pressure never exceed 160 mm Hg.

The proposed standard would require more extensive assessment of airmen who require or use antihypertensive medication. To maintain first-class certification, the assessment will be required at least at annual intervals, usually with every other application. For second- and third-class certification, valid for 1 year and 2 years, respectively, the assessment will be required with each application. Unless otherwise determined by the FAA under the special issuance provisions of the

FAR, certificates will be valid for the normal periods and, in most cases, issued by the designated AME if there are no adverse findings. These procedures are included in current FAA guidelines.

This proposed amendment would clarify the FAA's concern for the cardiovascular risk represented by hypertension and the agency's position that persons who are undergoing therapy for hypertension should be evaluated to assess the degree of risk. Though these standards are being codified for the first time, this evaluation does not represent a new practice.

Cholesterol

Currently no cholesterol standards exist in the regulations. In consideration of the responsibility for public safety held by airmen exercising pilot privileges in air transport operations, the FAA has partially accepted the recommendations of the AMA Report that the level of blood cholesterol be determined as part of the examination for medical certification. The Risk Factor Committee of the AMA that considered risk factors and qualifications for flying suggested that serum cholesterol and triglyceride levels be determined for all applicants initially and at 50 years of age. The Cardiovascular Committee of the AMA, however, recommended that a determination of serum cholesterol be made only for 50-year old applicants for first- and second-class medical certificates who exercise airman duties in single-pilot commercial operations. Both committees recommended further evaluation if a level greater than 300 milligrams per deciliter (mg/dl) of total cholesterol is found.

The FAA proposes (proposed § 67.111(f)) that total serum cholesterol be tested annually as part of the examination of all applicants for first-class medical certification who have reached their 50th birthday. Unlike a single determination, an annual requirement will assist the FAA in the identification of adverse trends in cardiovascular risk factors as airmen age. Applicants whose cholesterol level is determined to exceed 300 mg/dl would be required to undergo an additional cardiovascular evaluation to determine if significant disease is present, but issuance of a medical certificate would not be withheld solely on the basis of the cholesterol level.

The FAA agrees with the AMA Report and with the National Institutes of Health regarding the importance of this risk factor for disease and believes that the additional cost to the holders of first-class airman medical certificates is justified by the more effective identification of disease. By limiting this requirement to first-class certificate holders 50 years of age and older, public benefits are enhanced with minimum costs by targeting the population having the greatest risk and greatest public responsibility.

The FAA does not consider feasible the AMA Report recommendation that the serum cholesterol level requirement be limited to persons who exercise airman duties in single-pilot commercial operations. Individual airmen frequently perform in a variety of commercial operations or change from one type of operation to another. There are no regulatory controls for limiting applicability of such a requirement to single-pilot commercial operations.

Hematocrit

Currently no standard exists in the FAA regulations for blood hematocrit. The AMA Report recommends that all applicants at age 40, and periodically thereafter, demonstrate a hematocrit within the range of 32 to 55 percent. The requirement is recommended because the ability of blood to transport oxygen effectively to tissues is dependent on adequate hemoglobin concentration and on the ability of blood to perfuse organs. Abnormalities of this function can result in incapacitating organ infarcts. Also, a number of significant medical conditions are often reflected in abnormalities of the blood. Anemias of various etiology, organ malignancies, polycythemia, lung disease, hemoglobinopathies, coagulation and thrombotic disorders, hematologic neoplasia, lymphomas, immunodeficiency syndromes, and other disorders are included in the conditions that may be discovered through examination of the blood.

The FAA is not proposing to add new standards for blood hematocrit testing at this time. Hematocrit testing would impose incremental costs on applicants for a first-class airman medical certificate and additional administrative costs on the FAA. While the recommendations of the AMA Report suggest that hematocrit testing would result in detection of certain adverse or potentially incapacitating medical conditions, the risk to flight safety appears minimal in comparison to the cost of testing. The list of specific conditions that would disqualify a person is not proposed for inclusion in the FAR because the conditions are already covered in the general medical standards.

Anticoagulation

Current regulations do not contain specific standards for anticoagulation. Under the general rules of current paragraphs (f)(2) (i) and (ii) of §§ 67.13, 67.15, and 67.17, the FAA has denied routine certification of persons who require medication for anticoagulation. The FAA does, however, grant special issuance to a limited number of airmen who use this type of medication after extensive evaluations of the conditions requiring anticoagulation, the stability of the airmen's treatment regimens, and the presence or absence of adverse side-effects. Periodic reevaluation always is required for subsequent certification.

The AMA Report recommends denial of routine medical certification for anv person who uses an anticoagulant medication. This recommendation is consistent with earlier medical reports such as the report of the Eighth Bethesda Conference of the American College of Cardiology in 1975, the Report of a Working Party of the Cardiology Committee of the Royal College of Physicians of London in 1978, The First United Kingdom Workshop in Aviation Cardiology in 1982, and The Second United Kingdom Workshop in Aviation Cardiology in 1987, and with recommendations of some FAA medical consultants. Based on its experience with airmen who are taking anticoagulant medication, the FAA believes that some individuals who receive anticoagulant medications may be granted airman medical certification after careful evaluation of their specific condition. Such certification represents an exception, however, and must be accomplished under the special issuance provisions of the FAR, subject to appropriate, periodic medical reevaluation and possible restrictions. To clarify this position and to meet the FAA's statutory responsibility to ensure public safety, the FAA proposes (proposed § 67.111(c)) to add the use of anticoagulant medication to those conditions specified in the FAR as disqualifying an individual for certification. (Discussion of how a proposed disqualifying condition may affect a current medical certificate appears under "Additional Standards for Disqualification.")

Respiratory System

Current regulations do not contain specific standards pertaining to the respiratory system. The Respiratory System Committee, in its section of the AMA Report, recommended that all airmen older than 40 years periodically demonstrate the absence of severe lung

disease through spirometry, a simple, non-invasive test available in the physician's office. The committee stated its concerns for the danger to public safety represented by airmen with serious pulmonary disease such as chronic obstructive pulmonary disease (COPD), asthma, pulmonary fibrosis, infectious diseases of the lung, hypoventilation syndromes, chronic interstitial lung disease, and disorders of the respiratory muscles and bony thorax. Both judgment and the ability to perform complex tasks may be affected adversely by a reduction of oxygen available to the brain (hypoxia) because of poor pulmonary function, and acute lung disease can cause hypoxia without warning. Altitude itself affects pulmonary function, so careful assessment of pulmonary status is required to prevent incapacitation during flight, according to the committee's report.

Tests that measure the actual levels of oxygen and carbon dioxide in the arterial blood are costly and not generally available in the aviation medical examiner's office. Careful clinical assessment of respiratory function, including medical history and physical examination ordinarily are used to separate those applicants requiring further evaluation of their pulmonary status from those who do not.

The FAA is not proposing to add a new requirement for routine spirometric testing at this time. Spirometric testing would impose incremental costs on applicants for all classes of airman medical certificate and additional administrative costs on the FAA. AME's would be required to purchase the equipment necessary to perform the examination. Under current practice, individuals with potentially serious pulmonary disease are identified through existing procedures and referred for further evaluation, including spirometric testing, of their pulmonary status to determine their eligibility for medical certification.

The AMA Report also recommends specifically disqualifying diseases and conditions of the respiratory system. These would include severe lung disease, poorly controlled asthma, sleep disorders, pulmonary hypertension, pneumothorax, pulmonary emboli, and carcinoma of the lung. The list of specific conditions that would disqualify a person is not proposed for inclusion in the FAR because the conditions are already covered in the general medical standards.

Diabetes

In its discussion of diabetes in the preamble to Amendment 67–11, the FAA stated that the Federal Air Surgeon would continue to deny certification to individuals who have an established medical history or clinical diagnosis of diabetes that is controlled by the use of insulin or another hypoglycemic drug (47 FR 16298, April 15, 1982). The preamble further stated, "If, in the future, information demonstrating that medical technology has advanced to the point that diabetes can be controlled without significant risk of incapacitation from hypoglycemia or other complications becomes available to the FAA, consideration for special issuance of a medical certificate under § 67.19 will be possible."

As part of the review of part 67, the AMA Report made recommendations concerning individuals seeking medical certification who have an established history or clinical diagnosis of diabetes that is controlled by insulin or another hypoglycemic drug. The AMA Report recommended that persons whose diabetes is adequately controlled with oral hypoglycemic drugs and who show evidence of stability and freedom from adverse effects be considered for medical certification with proper medical monitoring. The Endocrine Committee assembled by the AMA believes that the likelihood of incapacitation from the effects of diabetes or its treatment with current oral hypoglycemic drugs, in those persons medically selected and monitored, is very remote. The AMA Endocrine Committee recommends that absolute prohibitions of certification of individuals requiring insulin for control of diabetes be continued. Informal surveys of agency medical consultants, comments by interested medical practitioners, and review by the FAA medical staff indicate general agreement with these findings and recommendations of the AMA Report. The more widespread use of technically advanced equipment and procedures has made it possible for physicians to better select those persons who should be allowed to use, or continue to use, oral drugs to control their disease. The increased use of simple equipment and tests for self-monitoring gives the diabetic and the physician a more accurate and timely picture of a person's immediate condition as well as his or her ability to control blood sugar over time.

In view of the current consensus of the medical community, the FAA has determined that many individuals whose diabetes is without complications and acceptably controlled by diet and oral drugs, with appropriate monitoring and other conditions, can perform the duties authorized by their class of medical certificate without endangering public safety. Accordingly, though no substantive rule change is proposed to current requirements in paragraph (f)(1) of §§ 67.13, 67.15, and 67.17, the Federal Air Surgeon has determined that those persons who do not meet the medical standard of the FAR because their diabetes requires oral hypoglycemic drugs will no longer be categorically denied special issuance of airman medical certification.

In determining eligibility for medical certification under the special issuance provisions of the FAR, the Federal Air Surgeon considers the natural history and severity of the problem, the period of satisfactory recovery since manifestation of the problem, and any treatment, as well as any continuing requirements for treatment, and the nature of treatment. For diabetics whose disease is controlled with oral hypoglycemic agents, additional factors that may be considered include: the age of onset of diabetes; the documented degree and means of past and present diabetes control; the presence or absence of adverse effects, including hypoglycemic episodes; the presence or absence of other known risk factors; and the individual's willingness and ability to maintain strict control of his or her condition and treatment and to cooperate with any monitoring plan required by the FAA.

Four physicians who served on the AMA Report's Endocrinology Committee subsequently submitted a letter stating that they reconsidered their Committee's recommendation on diabetes. The recommendation of the Endocrine Committee was to continue to disqualify diabetics who use insulin to control their disease. In their letter, the four physicians stated that persons on insulin therapy should be allowed consideration for special issuance certification. Several other physicians who commented on the AMA Report also supported certification of persons on insulin therapy.

The issues raised by these commenters pertain to current FAA policy of not permitting special issuance consideration for persons on insulin therapy. As recommended by the full AMA Committee, the FAA proposes to retain this policy but remains open to a change in its policy should there be any new medical developments. The issue was thoroughly covered by the full AMA Committee and its recommendation was made after deliberation and thorough discussion

The contra recommendation of the four physicians who submitted a letter to the FAA was not subjected to the same process, nor did their recommendation contain any acceptable procedure for identifying persons on insulin therapy who could be safely, reliably, and practically certified through the special issuance process.

In a related matter, a summary of an American Diabetes Association (ADA) petition for rulemaking to review FAA rules and policies regarding individuals with diabetes was recently published in the **Federal Register** (56 FR 10383, March 12, 1991). Specifically, the ADA petitioned the FAA to amend FAR §§ 67.13, 67.15, 67.17, and 67.19 to allow individuals with insulin-treated diabetes mellitus to be issued medical certificates on a case-by-case basis. The ADA further requested the creation of an FAA-appointed medical task force to develop a medical protocol capable of permitting meaningful case-by-case review.

Docket No. 26493 was established to receive comments on the ADA petition. Since the comment period on the ADA petition has closed but the subject of that petition is directly related to the part 67 review, additional comments on the diabetes-related issues raised in the ADA petition may be submitted to the docket of this rulemaking. The FAA may dispose of the issues raised in the ADA petition through this action at the final rule stage, or through the issuance of a separate disposition of the ADA petition.

Musculoskeletal

The Musculoskeletal System Committee of the AMA recommends standards that would disqualify an applicant for medical certification because of conditions such as quadriplegia, hemiplegia, hemiparesis, collagen disease, and vascular disease. The FAA does not propose specifying these conditions as disqualifying since they are already covered by current general medical standards (proposed §§ 67.115, 67.215, and 67.315).

Special Issuance of Medical Certificates

The FAA has used special issuance (waiver) provisions of § 67.19 (proposed § 67.401) for many years to grant airman medical certification to acceptable applicants who do not meet the published standards. Prior to 1982, except for applicants for air traffic control tower operator certificates, this authority was not available for airmen with histories of certain psychiatric, neurological, cardiac, or endocrine conditions, and exemptions from the regulations were required. Beginning in May 1982, however, airmen with a history or clinical diagnosis of any medical condition could be granted discretionary medical certification through the special issuance provisions if it could be determined that, notwithstanding the person's failure to meet the applicable medical standard, airman duties could be performed, with appropriate limitations or conditions, without endangering public safety. Through special issuance provisions, many airmen have returned to productive aviation careers and others to private flying after recovery and rehabilitation from serious medical conditions without adverse impact on public safety.

Consideration for the granting of a special issuance can be initiated in different ways. Currently, the FAA will often consider an individual for a special issuance who does not meet the medical standards under part 67 without a formal request to the agency from the individual. In some cases an individual who does not meet the medical standards under part 67 will make a written request to the Federal Air Surgeon or to his or her authorized representative to be considered for a grant of a special issuance.

Under current practice, a special issuance letter is issued advising an airman of the FAA's decision to grant the special issuance of a medical certificate. The letter describes the provisions and conditions of a special issuance of medical certification. Based on the letter and on the individual being otherwise eligible, the agency or examiner issues a medical certificate to the individual. These procedures apply for a new application and for an application for recertification.

Current § 67.19 provides that the Federal Air Surgeon may limit the duration of a medical certificate issued under that section, condition the continued effect of a medical certificate on the results of subsequent medical tests, examinations, or evaluations, impose any operational limitation needed for safety, or condition the continued effect of a second- or third-class medical certificate on compliance with a statement of functional limitations issued to the person in coordination with the Director of Flight Standards or the Director's designee. It is implicit in this section that in the interests of public safety a finding of adverse change in the medical condition of the holder would result in termination of the validity of the medical certificate.

The validity of the special issuance letter, however, does not lapse until the FAA takes some affirmative action to modify or terminate it. Similarly, once a medical certificate is issued pursuant to the special issuance provisions, even if the FAA terminates the special issuance letter, it may be considered that the medical certificate itself does not lapse until the original date of expiration, unless it is sooner suspended or revoked under the provisions of section 609 of the Federal Aviation Act. Long-standing agency practice in the case of adverse medical change has been to send the holder a letter terminating the validity of the special issuance of medical certification and requesting the return of any medical certificates held.

To ensure that the medical justification for the special issuance remains valid and the holder of the special issuance undergoes the same type of periodic reevaluation as the holder of any medical certificate does, it is proposed that the duration of an Authorization for Special Issuance of a Medical Certificate (Authorization) will be limited, and a new request for that Authorization will be required upon expiration. In addition, when the FAA determines that an Authorization should be withdrawn, the medical certificate issued pursuant to that Authorization will also expire, in accordance with proposed § 67.401(a).

An Authorization is one of two types of special issuances and covers those medical conditions, such as coronary heart disease, where the disease is progressive in nature. A Statement of Demonstrated Ability (SODA) is the second type of special issuance. If a medical condition, such as the accidental loss of a limb or deficient color vision is static and nonprogressive, the FAA issues a SODA to those applicants found able to perform airman duties without endangering public safety. This document remains valid indefinitely and permits a designated AME to issue a medical certificate of the specified class if the holder remains otherwise eligible. In the event of adverse change, certification is withheld and the person referred to the FAA for a new determination of eligibility.

Current § 67.19 (proposed § 67.401) refers only to the special issuance of medical certificates. The FAA proposes to add specific reference to the two types of special issuance documents: An Authorization and a SODA. The first document codifies the special issuance letter currently used to grant and describe the provisions of a special issuance of medical certification, and the second codifies a document that has been in use for many years. The proposed change explicitly connects the

duration of any medical certificate issued to the validity of the document upon which it is based and requires periodic requests for reissuance.

The FAA also proposes to add language (proposed § 67.401(f)) that explicitly provides that the Federal Air Surgeon may withdraw an Authorization or SODA when: There is adverse change in the holder's medical condition; the holder fails to comply with a statement of functional limitations or operational limitations issued as a condition of medical certification; the public safety would be endangered by the holder's exercise of airman privileges; the holder fails to provide medical information reasonably needed by the Federal Air Surgeon to determine continued eligibility for certification under the special issuance provisions; or the holder makes or causes to be made a fraudulent or false statement or an incorrect statement in support of his or her request or in any entry in any logbook, record, or report that is kept, made, or used, to show compliance with any requirement for an Authorization or SODA.

Proposed § 67.401(i) would allow a person to request a review of a decision to withdraw an Authorization or SODA. The holder of an Authorization or SODA that is withdrawn may request, within 60 days after the service or mailing of a letter of withdrawal, that the Federal Air Surgeon provide for a review of the decision to withdraw. The review procedures would provide the holder an opportunity to submit supporting evidence in his or her behalf, and to otherwise respond to the decision to withdraw. The proposed procedures and timeframes in § 67.401(i) are intended to provide an expeditious administrative review for the benefit of those persons affected by a decision to withdraw an Authorization or SODA. The public is invited to comment on the proposed procedures for withdrawal of an Authorization or SODA.

Proposed § 67.401(j) implements the procedure by which the FAA will convert current special issuances to either Authorizations or SODA's. All Authorizations will have an expiration date. The date will coincide with the expiration date of the airman's medical certificate or a date as stipulated by the Federal Air Surgeon or his or her authorized representative that relates to any medical test, report, or examination required as a condition of the special issuance.

Applications, Certificates, Logbooks, Reports, and Records: Falsification, Reproduction, or Alteration

Section 67.20(a) (proposed § 67.403(a)) of the FAR provides the regulatory basis for enforcement action when an applicant or airman falsifies a medical certification document. In current § 67.20(b), consequences for violating paragraph (a) include suspension or revocation of all airman, ground instructor, and medical certificates and ratings held by that person.

Although present paragraph (a)(1) provides explicitly only for suspension or revocation for fraudulent or intentionally false statements on any application for a medical certificate, the FAA has denied the medical certificate applied for in such cases. If the FAA interpreted the current regulation narrowly, it would have to issue a medical certificate and then revoke it in cases where the person has falsified the application. The proposed revision of these requirements (proposed § 67.403) provides explicitly for denial of an application for medical certification, as well as for suspension or revocation of all airman, ground instructor, and medical certificates and ratings held by that person, if the person makes a fraudulent or intentionally false statement or entry on the application or other document required to be kept, made, or used to show compliance with any requirement for any medical certificate under part 67.

A new paragraph (c) has been added to proposed § 67.403 to allow the FAA the *option* of denying, suspending, or revoking an airman medical certificate if any incorrect statement or entry has been made, even if the person did not knowingly make the incorrect statement or entry. Medical certification based on incorrect medical data may be inappropriate in the light of the true data.

Proposed § 67.403 also prohibits fraudulent or intentionally false statements or incorrect statements or entries in connection with any Authorization or SODA. In addition, proposed § 67.401, which sets out the procedures for Authorizations and SODA's, specifically lists the making of a fraudulent or intentionally false statement or an incorrect statement as grounds for withdrawal of an Authorization or SODA.

Certification Procedures, Applicability, and Medical Examinations

No substantive changes are proposed for present § 67.23 of the FAR (proposed § 67.405). Current § 67.21 is deleted because it is unnecessary under the new reorganization.

Delegation of Authority

This section (current § 67.25; proposed § 67.407) would be amended to substitute the current term "Manager" for "Chief" in the delegation of authority to the Manager, Aeromedical Certification Division, Civil Aeromedical Institute. It also would be amended to add issuance, renewal, denial, and withdrawal of Authorizations and SODA's to the authority delegated by the Administrator to the Federal Air Surgeon.

Denial of Medical Certificate

Current § 67.27 of the FAR (proposed § 67.409), Denial of Medical Certificate, is proposed for amendment only to substitute current terminology and the address for the Manager, Aeromedical Certification Division, and to remove gender-specific pronouns.

Medical Records

The FAA proposes to amend § 67.31 of the FAR (proposed § 67.413(a)) to change the word "refuses" to "fails" to make it clear that there need not be an actual refusal by an applicant or holder of a medical certificate to furnish requested information to trigger a suspension, modification, or revocation of a medical certificate. Failure to provide the requested information is sufficient cause for the Administrator to act. A new sentence would be added to this section (§ 67.413(b)) to make it clear that submission of requested information does not automatically lead to issuance of a medical certificate. A determination by the Federal Air Surgeon that the person meets applicable medical standards is needed before a certificate will be issued. The FAA also proposes to remove gender-specific pronouns and to substitute the more appropriate word, "physician" for the word "doctor."

Return of Medical Certificates After Suspension or Revocation

Current § 67.27(g) of the FAR provides that the holder of a medical certificate shall surrender it, upon request of the FAA, if its issuance is wholly or partly reversed upon reconsideration. Part 61 (§ 61.19(f)) provides that the holder of any certificate issued under that part that is suspended or revoked shall, upon the Administrator's request, return it to the Administrator. Except for § 67.27(g), part 67 is silent regarding return of medical certificates that have been suspended or revoked under the FAR or under Section 609 of the Federal

Aviation Act of 1958 (49 U.S.C. 1422). Because the retention by an airman of an invalid medical certificate is not consistent with proper and efficient enforcement of safety regulations, new § 67.415 is proposed. This amendment would codify existing practice, and clarify that any airman medical certificate revoked or suspended under existing authority must be returned on request of the Administrator.

Related Petition

On July 7, 1981, the Civil Pilots for Regulatory Reform (CPRR) filed a petition with the FAA Administrator (Docket No. 22054; AVS–81–520–P). The petition took issue with two aspects of the airman medical certification process. First, that the cardiovascular standards for first-, second-, and third-class medical certificates (paragraph (e)(1) in §§ 67.13, 67.15, and 67.17; 1981), automatically disqualify an airman who has an established history or clinical diagnosis of a myocardial infarction regardless of degree or recency. Second, that the only means to regain medical certification is dependent on the sole discretion of the Federal Air Surgeon via an exemption under part 11 of the FAR.

The CPRR petition proposes to modify a subparagraph of the 1981 cardiovascular standard which reads, "No established medical history or clinical diagnosis of myocardial infarction . . .," to read, "No coronary artery disease that makes the applicant unable to safely perform the duties or exercise the privileges of the airman certificate that he holds or for which he is applying; or may reasonably be expected, within 2 years after the finding, to make him unable to perform those duties or exercise those privileges; and the findings are based on the case history and appropriate, qualified, medical judgment relating to the condition involved." The effect of the proposed change is that a history of coronary artery disease would not, per se, disqualify an airman.

The CPRR petition also proposes that the standards and tests used by the Federal Air Surgeon to recertificate pilots who have sustained infarcts be published in regulatory form in an appendix to part 67, and that a pilot be granted appeal rights to the NTSB in the event that an exemption is denied. Furthermore, the CPRR petition proposes that the medical exemption procedures under part 11 be revised to provide a "due process" format for the exemption deliberation under part 11. The format would include: (a) if the airman petitioner requests exemption under part 11 because of disqualification under the cardiovascular standard, the airman is given a complete file, prior to the exemption panel meeting, of all records, reports and other documents which the agency plans to consider in the ruling; (b) the airman may attend and present evidence at the exemption panel meeting; (c) panel members must record their individual position in the official record of the meeting; and (d) the agency must construct a record sufficient to form a basis for review by the courts of appeal under the arbitrary and capricious standard of review.

FAA Response: The medical standards were revised in 1982 (47 FR 16298; April 15, 1982). The revision eliminated the need for the time consuming and cumbersome exemption pathway under part 11 for part 67 medical disqualification cases and opened up part 67 medical disqualification cases (including cardiovascular cases) to special issuance procedures under § 67.19. Additionally, the 1982 rule change stated, in the preamble, general and specific criteria that would be considered in the determination of a cardiovascular special issuance. The 1982 change considerably reduces the administrative costs and processing time for special issuance cases.

In regard to the CPRR proposals to change the disqualifying statement on myocardial infarction and to allow for "due process" and appeal, FAA review of part 67 has not led to such proposals. The disqualification for myocardial infarction remains in the proposed rules. However, it is, and would continue to be, possible for an applicant with a history or diagnosis of myocardial infarction to receive a medical certificate through the special issuance procedures if further medical evaluation of the applicant shows that he or she is able to perform the privileges of an airman certificate without endangering public safety. Any applicant who has been denied certification because he or she is unqualified under the cardiovascular standards is notified of the procedures, standards, and tests required for special issuance determination. Test results are reviewed and evaluated by medical specialists. Generally, in difficult cases or those involving commercial pilots, a panel of cardiovascular specialists reviews the medical reports and other required documentation, assesses the risks involved in accordance with its best medical judgment and advises if it believes a special issuance is warranted. The procedures provide for a reasoned, objective determination based on medical facts and judgment. The determination is not based on a hearing-type procedure in which subjective facts are weighed. In any case, the proposed rule would allow for the same "due process" as under the present rule.

Discussion of Public Comments

The FAA requested public comments on the review of part 67 in two separate notices. On July 15, 1982, the FAA announced the review of the regulations and invited public comment (47 FR 30795). On May 23, 1986, the FAA announced the availability of the AMA Report and invited public comment on recommendations in the report (51 FR 19040). A total of 211 comments were received. Comments were submitted by pilots, pilot organizations, and physicians, including several AME's. Most of the comments refer to the AMA Report recommendations, only some of which are proposed in this document for adoption.

The following discussion of comments addresses only the main medical issues raised by commenters that are relevant to this rulemaking document. It does not address comments on AMA recommendations that the FAA did not choose to adopt. Some commenters recommended changes similar to those recommended in the CPRR petition and, since the FAA's position on these issues has already been stated, it is not repeated below. While the following discussion addresses the main medical issues raised by commenters, it is not intended to be an exhaustive discussion of all of the comments received and considered by the FAA.

Comments Received on the Review of Part 67

In response to the first notice, the FAA received 52 comments providing suggestions for the FAA to consider during its review of part 67.

Twenty commenters, including four physicians, comment on persons with diabetes. In general, the commenters argue that diabetes is a disease that is well understood and easily monitored by a personal physician. Advances in treating diabetes, such as home glucose monitoring and other tests, provide full control to a pilot of his/her illness. Several pilots suggest that diabetes is readily containable with the appropriate medical care, and no significant physical strain is placed on a diabetic pilot in providing continuous treatment of the illness.

Four commenters discuss the possible benefits of an electrocardiogram (ECG) in evaluating a person's medical situation. One doctor who is also an

AME recommends a chest X-ray as a preventive test.

Another physician explains that there are currently no standards for risk factors such as cholesterol, cigarette smoking, and blood pressure. These all have links to heart disease and, as a result, should be closely examined. Three people, including two physicians, support closer testing of pilots for signs and effects of alcoholism. They point out that alcohol abuse is a major cause of aviation accidents and should, therefore, be tested.

Nineteen people objected to the stringent medical standards for persons obtaining a third-class medical certificate under § 67.17. They argue that these strict standards are too rigid for this class of flyers, who are generally leisure and sports pilots and can not easily obtain a medical examination.

The Aircraft Owners and Pilots Association (AOPA) submitted a detailed section by section recommendation for revising part 67 that was based on recommendations of a medical advisory panel of distinguished physicians that was convened by AOPA.

FAA Response: The FAA considered all of these comments, including AOPA's section by section recommendations, during its review of part 67. The FAA's proposed standards and policy on diabetes are discussed under the proposed rule portions of this preamble. New ECG requirements are proposed in this notice. Assessment of risk factors such as cholesterol and blood pressure is included and standards pertaining to alcoholism have been updated in the proposal.

The proposed rule amends the standards for third-class medical certificates in light of recent technology and medical knowledge. As noted in the discussion of the proposed rule, the standards for third-class medical certificates are less stringent than those for first- and second-class certificates in recognition of the lower level of responsibility inherent in noncommercial flight operations.

Comments Received on AMA Report Recommendations

Most commenters were generally opposed to any AMA recommendations that involved a perceived strengthening of the standards for airman medical certification. Only eight commenters generally favored the AMA recommendations, some with suggestions for improving them.

Many of the opposing comments from pilots were based on their reading of an editorial about the AMA Report which appeared in *Flying* magazine (Volume 113, November 1986, page 24) entitled "What's Up, Doc?" While the editorial was factually accurate, it briefly summarized some of the recommendations and was primarily a subjective editorial opinion opposing certain recommendations in the AMA Report.

Cost and Safety

The most frequent comment from those who objected to the AMA Report recommendations is that the recommended changes will result in a substantial increase in the cost of obtaining a medical certificate and that there are no accident data to indicate a need for increasing medical standards and thereby medical certification costs.

FAA Response: The review of part 67 was necessary to ensure that the standards reflect current medical technology and evolving knowledge about conditions that could affect a pilot's ability to perform safely. For the most part, the proposed revisions to part 67 are not a strengthening of the standards over current regulations and policy. They represent clarification, codification of policy, and an updating of the current standards and practices. The proposed rule would make some standards less stringent, such as the deletion of uncorrected distant visual acuity requirements and the revised wording of those requirements pertaining to the eye, ear, nose, pharynx, and larynx. In other instances, additions to the medical examination requirements such as the proposed new standards for blood pressure for second- and third-class medical certification are clearly warranted. The FAA would be remiss in its responsibility for safety if it ignored medical findings and advances that can better identify those individuals subject to incapacitation or deterioration of performance. The estimated costs and benefits of this proposal are addressed in a Regulatory Evaluation Summary later in this preamble and more fully in a full regulatory evaluation which is in the public docket.

Prevention vs. Safety

Several commenters object to statements in the AMA Report that certain recommendations are based on concepts of preventive medicine. These commenters say that the FAA's responsibility is to safety rather than to a system of healthier pilots. According to these commenters, the purpose of the agency's medical examination is to determine if a pilot is able to perform safely the privileges of the airman certificate, not whether the pilot is generally healthy.

FAA Response: The FAA is not proposing to change the primary safety objective of the medical certification examination. Rather, the proposed revisions to the standards embody what has been learned in the last 25 years about medical risk factors. FAA's interest in risk assessment is directly related to its need to determine at the time of a medical examination as much objective information as possible on the medical condition of the person being examined. This information is directly relevant to FAA's need to determine the likelihood that the person being examined will remain medically fit for the next 6 months, or 1 or 2 years, as applicable.

The AMA report is fully consistent with helping the FAA meet its statutory safety responsibilities. The AMA Report notes that some of its recommendations include "risk factor identification items." It further notes:

> These items add to the safety factor for which the examination is designed; they also increase the likelihood that pilots who pay attention to these risk factors will be able to enjoy flying aircraft for more years.

The fact that the AMA Report mentions potential long term preventive health benefits that may accrue to the person being examined in no way diminishes the importance of the short term health evaluation benefits that are of primary concern to the FAA.

AMA Contract

Several commenters object to the AMA Report because they believe the recommendations are in the AMA's self interest. According to these commenters, any proposed increase in requirements would serve to increase the cost of the medical examination and thereby the income of doctors.

FAA Response: In its consideration of the AMA Report, the FAA found no indication of self-serving motives. The AMA committees which worked on developing the recommendations were made up of experienced and respected specialists in each area of medical interest. Each committee did an in-depth and thorough analysis of the current standards in relation to advances in medical knowledge and examination techniques and recommended, as appropriate, optimum standards for safety. The FAA reviewed and considered these recommendations along with public comments (many from professionals in the field) and advice from its own staff. Factors such as pilot performance, aircraft technology, and cost, in addition to general safety were considered by the FAA in assessing each AMA

recommendation. (A cost benefit analysis appears in the Regulatory Evaluation portion of this preamble.) The FAA believes the proposed standards will benefit all airmen as well as the general public.

FAA Workload

Several commenters express concern that the AMA Report recommendations, if adopted, would lead to an increase of denials and, therefore, an increase in requests for certification under the special issuance provisions of the FAR. This in turn would lead to certification processing delays.

FAA Response: The FAA does not anticipate that the proposed standards will significantly increase the internal FAA workload. The potential for such an increase and the FAA's plans to meet the increase are discussed more fully in the regulatory evaluation.

Industry Disincentive

Several commenters state that general aviation is presently in economic trouble and that more stringent medical standards would discourage more people from becoming general aviation pilots.

FAA Response: The FAA does not agree. The safer the system, the greater the number of participants and the lower the cost. The FAA believes that these proposals encourage and support aviation.

Alleged Discrimination Against Older Pilots

Several commenters allege that the AMA recommendations discriminate against older pilots in favor of younger ones, since many of the tests recommended become critical for pilots after the age of 40 or 50. Air transport pilots who commented argue that, if adopted, the recommendations might prohibit some older and more experienced pilots from flying. According to these commenters, older pilots represent a high percentage of the highly competent and seasoned professional pilots.

FAA Response: Any medical standards necessarily have a greater effect on older persons since many disorders occur more frequently with advancing age, especially after age 40. The FAA contracted with Johns Hopkins University to prepare a detailed statistical analysis of computerized medical information collected by the FAA from examination of approximately 31,000 air traffic controllers over a 15-year period. The study sample was demographically comparable to the private pilot population and the examinations were similar to airman medical examinations. The analysis shows that the incidence of pathology recorded at periodic examinations increases with age; the prevalence of pathology in individuals over the age of 50 was greater than in those under the age of 40. The AMA recommendations and the FAA proposed rule focus on those disorders most likely to result in reduced performance or to incapacitate a pilot. They provide for more relevant, more thorough, and more predictive evaluations after age 40 or 50, particularly for those persons seeking first-class medical certification. Proposed changes in this category relate to vision; electrocardiograms; and blood cholesterol determinations. The proposed standards will permit the identification of risk factors and encourage pilots to maintain better control over those conditions which eventually could lead to disqualification. Those AMA recommendations included in the FAA proposal should serve, in the long term, to increase the pool of experienced, professional, and medically eligible pilots.

AME's or Private Physicians

Several commenters raise issues about the role of AME's and the role of private physicians in the maintenance of a pilot's health. Two flight instructor pilots state that mistrust exists between pilots and medical examiners caused by pilots' fear of losing their medical certification and their careers as pilots. More stringent rules, as recommended by the AMA, will increase pilots' concerns and mistrust. Commenters also believe that some of the recommendations concerning family history, for example, should be the domain of a pilot's personal physician and that in some instances personal physicians could supply the information required by the recommended standards.

FAA Response: Both current and proposed standards permit the use of test results provided by personal physicians, such as ECG's and X-rays. However, the historical and legal role of the AME as a designee of the FAA is to conduct a medical examination to determine the fitness of the pilot to exercise the privileges of his or her certificate without endangering public safety. The proposed standards in no way are intended to interfere with or replace a pilot's use of a personal physician. Experience, however, indicates that the FAA's statutory responsibility to ensure that an airman is medically fit to perform his or her duties cannot be delegated to any personal physician. The proposed changes, however, should not affect the relationship between pilots and AME's.

Specific Standards

Several commenters object to one or more specific recommendations in the AMA Report. Objections to cardiovascular and vision standards are the most frequent. Some of these commenters express concern that the recommended standards will serve to discourage good health practices through fear of denial. For example, commenters who objected to the AMA recommendation for a blood pressure standard particularly object to the AMA recommendation that an applicant shall have no established medical history of use of antihypertensive medication within the last year. Commenters who use antihypertensive medication said they would either stop taking the medication (which they need) or be denied.

FAA Response: The proposed standards do not specify that individuals using antihypertensive medication shall be denied certification. If antihypertensive medication is used or is needed to meet the blood pressure requirement, a person may be issued a certificate only after a current, satisfactory medical assessment, prescribed by the Federal Air Surgeon. In this case as in some others, the FAA has not followed the AMA recommendation. However, the comments indicate a misunderstanding. A medical history of a disqualifying condition, whatever that condition is, does not necessarily mean that a person will be denied certification absolutely. It may mean that additional evaluation may be required before the FAA can determine if certification is appropriate. This may require additional time and some expense for additional tests, but, for most of the proposed standards, the added inconvenience is minimal compared to the improvement in safety.

Regulatory Evaluation Summary

Introduction

Three requirements pertain to economic impacts of regulatory changes to the FAR. First, Executive Order 12291 directs Federal agencies to promulgate new regulations or modify existing regulations only if the potential benefits to society outweigh the potential costs. Second, the Regulatory Flexibility Act of 1980 requires agencies to analyze the economic impact of regulatory changes on small entities. Finally, the Office of Management and Budget (OMB) directs agencies to assess the effects of regulatory changes on international

trade. In conducting these analyses, the FAA has determined that this rule:

(1) would generate benefits exceeding costs, and, thus, is not a major rule as defined by the Executive Order; (2) is significant as defined in DOT's Policies and Procedures; and (3) would not have a significant impact on a substantial number of small entities; and (4) would not have an impact on international trade. These analyses, available in the docket, are summarized below.

Regulatory Evaluation Summary

The majority of the proposed amendments would have insignificant attributable costs with respect to the benefits received. This evaluation does not address the minor proposed amendments such as changes in syntax, technical corrections, reorganization, updating medical terminology, or adjustments to cross-references for conformance purposes.

Furthermore, the evaluation attributes no significant costs or benefits to several other proposed amendments that would add a specific disease or medical condition to the list of medical standards. Such additions do not necessarily constitute a change in the standards. Current regulations include two open-ended (general) medical standards that cover:

(1) any other personality disorder, neurosis, or mental condition * * *, or (2) any other organic, functional, or structural disease, defect, or limitation * * * that the Federal Air Surgeon finds would make, or may reasonably be expected to make, the applicant unable to perform the duties associated with the certificate. Thus, the applicable medical standards are not limited to those actually listed in the regulation. As medical knowledge and experience progress, the Federal Air Surgeon may find a previously unlisted disease or condition to be grounds for withholding or restricting a medical certificate, so long as that finding is based on qualified medical judgment.

Under the proposed standards, a small number of airmen who currently hold certificates as a result of an order of the NTSB would become disqualified from further medical certification because of the addition of specifically disqualifying medical conditions. These airmen were denied medical certification by the FAA under the current general medical standards. For example, the FAA has denied certification to airmen who have had cardiac valve replacement and the NTSB has ordered certification in some of these cases. Under the proposed standards, a medical history of cardiac valve replacement would be specifically disqualifying and those airmen would no longer be entitled to certification. It is expected, however, that certification of the affected individuals would continue under the Federal Air Surgeon's special issuance authority once the FAA evaluates the case and is satisfied that the airman's condition has not worsened since the NTSB ordered certification. As such, the expected economic impact of the specifically disqualifying medical conditions would be minor.

Costs and Benefits That Are Not Quantified

Prior to summarizing the evaluation of the substantive proposals, it is important to note one category of costs and one category of benefits that have not been quantified in this analysis. The evaluation does not explicitly quantify the economic consequences to those individuals who would lose their pilot certificate privileges as a result of the proposed additional medical tests or standards. Where such consequences are expected, the evaluation estimates the numbers of persons who would be denied but does not attribute a cost to those actions.

It is recognized that the denial of pilot privileges would mean the loss of a highly valued avocation for some individuals. For others, it would actually result in the loss of primary livelihood. An accurate assessment of the economic valuation of the denials that are projected under this proposed rule is beyond the scope of the evaluation.

At the same time, the evaluation also does not quantify the overwhelming personal health benefits, external to flight safety, that would be afforded to those individuals whose medical conditions would be detected and whose treatment would be enabled by the proposed tests and standards. On average, third-class medical certificate holders spend only 0.7 percent of their time flying. The evaluation only quantifies the direct benefits of the proposed rule to reduced aviation accidents.

Under existing regulations, the Federal Air Surgeon is charged to deny a certificate in those cases where a disease or other physical or mental condition would make, or may be reasonably be expected to make, the applicant unable to perform the duties associated with the certificate. Such findings are not capricious, but instead, are based on the case history of the individual and on appropriate, qualified medical judgment.

Summary of Quantified Costs and Benefits

Vision Proposals, All Classes

The proposed rule would institute additional vision tests and standards for all three classes. For first- and second-class applicants age 50 and older, it would add a new standard (20/40 Snellen) and a new test for intermediate vision (32 inches). Applicants for third-class medical certificates would be subject to a new standard (20/40 Snellen) and a new test for near vision (16 inches).

The projected 10-year (1994–2003) costs of the intermediate vision proposal for first-class applicants are $1.1 million in primary testing costs, $1.7 million in follow-up compliance costs (examinations and glasses) for those persons not meeting the standard, $5,641 in direct processing costs for the expected 14 additional persons who would be denied under the provision, totalling $2.8 million, with a 1993 present value of $2.0 million.

The projected 10-year costs of the intermediate vision proposal for second-class applicants are $462,887 in primary testing costs, $2.2 million in follow-up compliance costs (examinations and glasses) for those persons not meeting the standard, and $6,529 in direct processing costs for the expected 17 additional persons who would be denied under the provision, totalling $2.7 million, with a 1993 present value of $1.8 million.

The projected 10-year costs of the near vision proposal for third-class applicants are $2.8 million in primary testing costs, $1.3 million in follow-up compliance costs (examinations and glasses) for those persons not meeting the standard, and $131,340 in direct processing costs for the expected 339 additional persons who would be denied under the provision, totalling $4.2 million, with a 1993 present value of $2.9 million. It is emphasized that the denials and costs associated with the near vision proposal are not wholly attributable to the proposed amendment. Although this requirement does not exist in current regulations, it has been in place administratively for some time. Thus, the associated costs are being, and would continue to be, incurred without this proposed amendment.

NTSB accident records were investigated for the periods from 1962 through 1989 for commercial flights and from 1982 through 1989 for general aviation (GA). For these periods, no accident was found where intermediate or near vision deficiency was specifically determined to be the cause.

As such, the FAA is not able to quantitatively ascribe the benefits of the three proposed vision amendments based on historical accident analysis.

Notwithstanding the absence of documented accidents related to these three proposals, the FAA maintains that such accidents may well have occurred and could continue to occur in the absence of the proposed amendments. The NTSB accident analysis system may not document those cases where a near or intermediate vision problem caused or contributed to accidents. Examples would include deviations from course or altitude, inaccurate monitoring of gauges and other avionic displays, and incorrect setting of aeronautical parameters such as headings or radio frequencies.

While the extent to which intermediate or near vision problems have caused such accidents is unknown, it is the FAA's position that: (1) general aviation pilots require adequate near vision to read charts and checklists, and (2) commercial pilots require adequate intermediate vision to properly monitor aircraft instruments. Although this evaluation is not able to quantify the benefits of the proposed vision amendments, the FAA holds that the benefits would be significant and would exceed the expected costs.

Electrocardiogram (ECG), Second-Class

The proposal would add a new requirement whereby applicants for second-class medical certificates would be required to have a routine resting ECG at the first application after reaching age 35 and every 2 years after reaching age 40. The projected ten-year costs of the provision are $25.5 million in primary testing costs, and $1.7 million of additional testing and processing costs for those persons who would not meet the standard, including 178 persons who would be denied, totalling $27.2 million, with a 1993 present value of $19.2 million.

The projected benefits of this provision were based on a review of the related NTSB accident records. In the absence of this proposal, commercial pilot, heart-related accidents over the 1994–2003 period are projected to consist of: 2.64 deaths per year valued at $6.60 million, .14 serious injuries per year valued at $89,600, .14 minor injuries per year valued at $322, and 2.06 damaged or destroyed (GA and commercial) airplanes per year valued at $169,360, totalling $6,859,282 per year. The projected benefits of this provision over the ten-year study period are $68.6 million, with a present value of $48.2 million. The FAA holds that the proposed amendment would meet or exceed the 40 percent effectiveness level ($19.2 million cost / $48.2 million potential benefit) necessary to be cost beneficial.

Blood Pressure, Second-Class

The proposal would add a new requirement that the sitting blood pressure second-class medical certificate applicants not exceed 150/95 millimeters of mercury. The projected ten-year costs of the provision are $1.8 million in primary testing costs and $0.7 million of additional testing and processing costs for those persons who would not meet the standard, including 32 persons who would be denied, totalling $2.5 million, with a 1993 present value of $1.7 million.

The projected benefits of this provision were based on the review of the related NTSB accident records. For second-class (commercial pilots), only one general aviation accident was found where hypertension or stroke was specifically listed as the cause. That accident caused one death and destroyed one aircraft. Based on that accident, commercial pilot accidents related to hypertension or stroke are projected over the forecast period to equal: (1) .14 deaths per year valued at $350,000 and (2) .14 destroyed airplanes per year valued at $10,920, totalling $360,920 annually.

In addition to the directly attributable pathologies, high blood pressure is also an associated risk factor for other pathologies including cardiovascular disease and kidney failure. The exact impact of the proposed rule on preventing accidents from these related diseases is not known but the FAA estimates that the magnitude of associated-disease accident costs that would be averted by the proposed amendment is at least equal to 5 percent of the projected costs attributable to second-class cardiovascular accidents. Such potential benefits would total $342,964 per year. The combined (direct and associated risk disease) potential benefits of the proposed second-class blood pressure amendment over the ten-year study period are expected to total $7.0 million, with a 1993 present value of $4.9 million. The FAA holds that the proposed amendment would meet or exceed the 35 percent effectiveness level ($1.7 million cost / $4.9 million potential benefit) necessary to be cost beneficial.

Blood Pressure, Third-Class

The proposal would add a new requirement that the sitting blood pressure of all applicants for third-class medical certificates not exceed 150/95 millimeters of mercury. The projected ten-year costs of the provision are $2.8 million in primary testing costs and $1.0 million of additional testing and processing costs for those persons who would not meet the standard, including 48 persons who would be denied, totalling $3.8 million, with 1993 present value of $2.7 million.

The projected benefits of this provision were based on a review of the related NTSB accident records for the period 1982 through 1989. For third-class certificate holders, 6 general aviation accidents were found where hypertension or stroke was specifically listed as the cause. In the absence of this proposal, third-class accidents related to hypertension or stroke are projected to equal .75 deaths per year valued at $1,875,000, .5 serious injuries per year valued at $320,000, .13 minor injuries per year valued at $299, and .75 destroyed airplanes per year valued at $58,500, totalling $2.3 million per year. Over the ten-year study period, the potential benefits would equal $22.5 million, with a 1993 present value of $15.8 million.

Similar to the proposal for second-class, the proposed third-class blood pressure standard would also reduce those accidents caused by the secondary pathologies where high blood pressure is an associated risk factor. However, the magnitude of accidents directly caused by hypertension and stroke in third-class pilots is so large that an estimate of these secondary benefits is unnecessary. The FAA holds that the proposed amendment would meet or exceed the 17 percent effectiveness level ($2.7 million cost / $15.8 million potential benefit) necessary to be cost beneficial.

Cholesterol, First-Class

The proposal would add a new requirement whereby applicants for first-class medical certificates age 50 and over would be tested and would be subject to a standard of 300 milligrams per deciliter. The projected ten-year costs of the provision are $3.4 million in primary testing costs and $2.0 million of additional testing and processing costs for those persons who would not meet the standard, including 81 persons who would be denied, totalling $5.4 million, with a 1993 present value of $3.7 million.

A review of general aviation accidents from 1982 through 1989 found six accidents caused by heart attacks in air transport pilots. These accidents resulted in seven deaths, one serious injury, and six destroyed airplanes. Parallel statistics for commercial accidents (from 1962 through 1989) revealed 4 accidents with 95 deaths, 15

major injuries, 2 destroyed commuter airplanes and 2 destroyed air transport planes

These statistics project an annual, cardiovascular-related accident cost of $2.0 million in damaged airplanes, and $27.2 million in lost life and injury costs. Multiplying the total $29.2 million projected cost by 5 percent, to estimate the likely proportion of these costs that would be averted by the proposed cholesterol test and standard, results in a potential annual benefit estimate of $1.46 million. Accordingly, the ten-year benefits are projected to be $14.6 million, with a 1993 present value of $10.3 million. The FAA projects that the expected minimum potential benefits of the proposal ($10.3 million) would exceed the estimated cost ($3.7 million).

Part 61, Certificate Validity Period, Third-Class

Under the proposal, persons under age 40 would generally only be required to undergo a physical examination every 3 years. Medical certificates for persons age 40 through 69 would continue to be valid for 2 years. Persons age 70 and older would be required to undergo a physical examination every year.

The amendment would reduce: (1) the projected years of pilot pathology exposure by an estimated 0.2 percent, (2) the projected flight hours of pilot pathology exposure by some 4.1 percent, and (3) the projected number of third-class medical examinations by 14.5 percent. Accordingly, it is expected that the proposed amendment would not induce any costs to third-class applicants considered as a whole.

The evaluation does not specifically quantify the potential benefits from the expected minor reductions in pathology exposure. The expected ten-year savings that would derive from the 14.5 percent reduction in examinations is projected to total $23.7 million in direct testing and time costs (a 1993 present value of $16.5 million). With a projected benefit of $16.5 million and no expected net costs, the FAA finds that this provision would be cost beneficial.

It is noted that the provision would transfer costs and benefits across age groups. Third-class applicants younger than 40 would take fewer examinations and would be expected to manifest a higher incident of undetected pathologies. Conversely, the group of applicants age 70 and older would take more examinations and would exhibit fewer undetected pathologies. However, the net effect would be a reduction in both examinations and pathologies, consistent with Executive Order 12291 which requires that regulatory objectives be chosen to maximize the net benefits to society.

Regulatory Flexibility Determination

The Regulatory Flexibility Act of 1980 (RFA) was enacted by Congress to ensure that small entities are not unnecessarily or disproportionately burdened by Government regulations. The RFA requires a Regulatory Flexibility Analysis if a rule would have a significant economic impact, either detrimental or beneficial, on a substantial number of small entities. FAA Order 2100.14A, Regulatory Flexibility Criteria and Guidance, provides threshold cost and small entity size standards for complying with RFA review requirements in FAA rulemaking actions. After reviewing the projected effects of the proposed rule in light of these standards, the FAA finds that the proposal would not have significant economic impact on a substantial number of small entities.

International Trade Impact Statement

The proposed rule would have little or no impact on trade for both U.S. firms doing business in foreign countries and foreign firms doing business in the United States.

Paperwork Reduction Act

The paperwork burden associated with part 67 is currently approved under OMB number 2120–0034. Any increase or decreases associated with this NPRM will be submitted to OMB for approval.

Federalism Implications

The regulations proposed herein would not have substantial direct effects on the states, on the relationship between the national government and the states, or on the distribution of power and responsibilities among the various levels of government. Therefore, in accordance with Executive Order 12866, it is determined that this proposal would not have sufficient federalism implications to warrant the preparation of a Federalism Assessment.

Conclusion

For the reasons discussed in the preamble, and based on the findings in the Regulatory Evaluation and the International Trade Impact Analysis, the FAA has determined that this proposed regulation is not major under Executive Order 12866. In addition, the FAA certifies that this proposal, if adopted, will not have a significant economic impact, positive or negative, on a substantial number of small entities under the criteria of the Regulatory Flexibility Act. This proposal is considered significant under DOT Regulatory Policies and Procedures (44 FR 11034; February 26, 1979). An initial regulatory evaluation of the proposal, including a Regulatory Flexibility Determination and Trade Impact Analysis, has been placed in the docket. A copy may be obtained by contacting the person identified under FOR FURTHER INFORMATION CONTACT.

Derivation and Distribution Tables

The Derivation Table below shows the source in current part 67 on which each paragraph of each section of proposed revised part 67 is based. The Distribution Table below shows where each current part 67 section and paragraph can be found in the proposed revised part 67.

DERIVATION TABLE

Proposed section	Based on
Subpart A	
Section:	
67.01	Current §§67.1 and 67.21.
67.03	Current §67.11.
67.05	Current §67.12.
67.07	Current §67.3.
Subpart B	
Section:	
67.101	Current §67.13(a) and new language.
67.103(a)	Current §67.13(b)(1).
67.103(b)	Current §67.13(b)(2) and new language.
67.103(c)	Current §67.13(b)(3) and new language.
67.103(d)	Current §67.13(b)(4).
67.103(e)	Current §67.13(b)(5).
67.103(f)	Current §67.13(b)(6) and flush paragraph.
67.105(a)	Current §67.13(c)(1) and new language.
67.105(b)	Current §67.13(c)(2), (c)(3), (c)(4), (c)(5), and new language.
67.105(c)	Current §67.13(c)(6) and new language.
67.107(a)	Current §67.13(d)(1)(i) and new language.
67.107(b)	New language.
67.107(c)	Current §67.13(d)(1)(ii) reordered.
67.109(a)	Current §67.13(d)(2)(i) and new language.
67.109(b)	Current §67.13(d)(2)(ii).
67.111(a)	Current §67.13(e)(1) and new language.
67.111(b)	New language.
67.111(c)	New language.
67.111(d)	Current §67.13(e) (2) and (3) and new language.
67.111(e)	Flush paragraph after current §67.13(e)(5) as modified.
67.111(f)	New language.
67.113(a)	Current §67.13(f)(1).
67.113(b)	Current §67.13(f)(2).
67.115	Current §67.13(g).

DERIVATION TABLE—Continued

Proposed section	Based on
Subpart C	
Section:	
67.201	Current §67.15(a) and new language.
67.203(a)	Current §67.15(b)(1).
67.203(b)	Current §67.15(b)(2) and new language.
67.203(c)	Current §67.15(b)(5) and new language.
67.203(d)	Current §67.15(b)(3).
67.203(e)	Current §67.15(b)(4) and new language.
67.203(f)	Current §67.15(b)(6) and flush paragraph.
67.205(a)	Current §67.15(c)(1) and new language.
67.205(b)	Current §67.15(c)(2), (c)(3), (c)(4), (c)(5), and new language.
67.205(c)	Current §67.15(c)(6) and new language.
67.207(a)	Current §67.15(d)(1)(i) and new language.
67.207(b)	New language.
67.207(c)	Current §67.15(d)(1)(ii) reordered.
67.209(a)	Current §67.15(d)(2)(i) and new language.
67.209(b)	Current §67.15(d)(2)(ii) and new language.
67.211(a)	Current §67.15(e)(1) and new language.
67.211(b)	New language.
67.311(c)	New language.
67.211(d)	New language.
67.211(e)	New language.
67.213(a)	Current §67.15(f)(1).
67.215(b)	Current §67.15(f)(2).
67.217	Current §67.15(g).
Subpart D	
Section:	
67.301	Current §67.17(a) and new language.
67.303(a)	Current §67.17(b)(1) and new language.
67.303(b)	New language.
67.303(c)	Current §67.17(b)(3) and new language.
67.303(d)	Current §67.17(b)(2) and new language.
67.305(a)	Current §67.17(c)(1) and new language.
67.305(b)	Current §67.17(c) (2) and (3), and new language.
67.305(c)	Current §67.17(c)(4) and new language.
67.307(a)	Current §67.17(d)(1)(i) and new language.
67.307(b)	New language.
67.307(c)	Current §67.17(d)(1)(ii) reordered.
67.309(a)	Current §67.17(d)(2)(i) and new language.
67.309(b)	Current §67.17(d)(2)(ii) and new language.
67.311(a)	Current §67.17(e)(1) and new language.
67.311(b)	New language.
67.311(c)	New language.
67.313(a)	Current §67.17(f)(1).

DERIVATION TABLE—Continued

Proposed section	Based on
67.313(b)	Current §67.17(f)(2).
67.315	Current §67.17(g).
Subpart E	
Section:	
67.401(a)	Current §67.19(a) and new language.
67.401(b)	New language.
67.401(c)	Current §67.19(b).
67.401(d)	Current §67.19(d) and new language.
67.401(e)	Current §67.19(c)
67.401(f)	New language.
67.401(g)	Current §67.19(e) and new language.
67.401(h)	Current §67.19(f) and new language.
67.401(i)	New language.
67.401(j)	New language.
67.403(a)	Current §67.20(a) and new language.
67.403(b)	Current §67.20(b) and new language.
67.403(c)	New language.
67.405(a)	Current §67.23(a).
67.405(b)	Current §67.23(b).
67.407(a)	Current §67.25(a) and new language.
67.407(b)	Current §67.25(a) flush paragraph and new language.
67.407(c)	Current §67.25(b) and new language.
67.407(d)	Current §67.25(c).
67.409(a)	Current §67.27(a).
67.409(b)	Current §67.27(b).
67.409(c)	Current §67.27(c).
67.409(d)	Current §67.27(d).
67.411(a)	Current §67.29(a).
67.411(b)	Current §67.29(b).
67.411(c)	Current §67.29(c).
67.413(a)	Current §67.31.
67.413(b)	New language.
67.415	New language.

DISTRIBUTION TABLE

Current section	Proposed section
Subpart A	
Section:	
67.1	§67.01.
67.3	§67.07.
67.11	§67.03.
67.12	§67.05.
67.13(a)	§67.101.
67.13(b)	§67.103.
67.13(c)	§67.105.
67.13(d)	§67.107 and §67.109.
67.13(e)	§67.111.
67.13(f)	§67.113.
67.13(g)	§67.115.
67.15(a)	§67.201.
67.15(b)	§67.203.
67.15(c)	§67.205.
67.15(d)	§67.207 and §67.209.
67.15(e)	§67.211.
67.15(f)	§67.213.
67.15(g)	§67.215.

DISTRIBUTION TABLE—Continued

Current section	Proposed section
67.17(a)	§67.301.
67.17(b)	§67.303.
67.17(c)	§67.305.
67.17(d)	§67.307 and §67.209.
67.17(e)	§67.311.
67.17(f)	§67.313.
67.17(g)	§67.315.
67.19	§67.401.
67.20	§67.403.
Subpart B	
Section:	
67.21	§67.401.
67.23	§67.405.
67.25	§67.407.
67.27	§67.409.
67.29	§67.411.
67.31	§67.413.

List of Subjects

14 CFR Part 67

Airman medical certification, Airman medical standards, Air safety, Air transportation, Aviation safety, Falsification, Special issuance procedures.

14 CFR Part 61

Airline transport pilots, Air safety, Aircraft ratings, Air transportation, Aviation safety, Commercial pilots, Flight instructors, Private pilots, Special certificates, Student and recreational pilots.

1. The authority citation for part 61 is revised to read as follows:

Authority: 49 U.S.C. 106(g), 1354(a), and 1422.

2. Section 61.23 is amended by revising paragraphs (a)(3), (b)(2), and (c) to read as follows:

§ 61.23 Duration of medical certificate.

(a) * * *

(3) The period specified in paragraph (c) of this section for operations requiring only a private, recreational, or student pilot certificate.

(b) * * *

(2) The period specified in paragraph (c) of this section for operations requiring only a private, recreational, or student pilot certificate.

(c) A third-class medical certificate for operations requiring a private, recreational, or student pilot certificate issued on or after [effective date of the final rule] expires at the end of the last day of the:

(1) 36th month after the month of the date of the examination shown on the certificate if the person has not reached his or her 40th birthday on or before the date of the examination;

(2) 24th month after the month of the date of the examination shown on the certificate if the person has reached his or her 40th birthday but has not reached his or her 70th birthday on or before the date of the examination; or

(3) 12th month after the month of the date of the examination shown on the certificate if the person has reached his or her 70th birthday on or before the date of the examination

3. Section 61.39 is amended by revising paragraph (a)(3) to read as follows:

§ 61.39 Prerequisites for flight tests.

(a) * * *

* * * * *

(3) Hold a current medical certificate appropriate to the certificate the applicant seeks or, in the case of a rating to be added to the applicant's pilot certificate, at least a valid third-class medical certificate issued under § 61.23;

* * * * *

4. Part 67 is revised to read as follows:

PART 67—MEDICAL STANDARDS AND CERTIFICATION

Subpart A—General

Sec.

67.01 Applicability.
67.03 Issue.
67.05 Certification of foreign airmen.
67.07 Access to the National Driver Register.

Subpart B—First-Class Airman Medical Certificate

67.101 Eligibility.
67.103 Eye.
67.105 Ear, nose, throat, and equilibrium.
67.107 Mental.
67.109 Neurologic.
67.111 Cardiovascular.
67.113 General medical condition.
67.115 Discretionary issuance.

Subpart C—Second-Class Airman Medical Certificate

67.201 Eligibility.
67.203 Eye.
67.205 Ear, nose, throat, and equilibrium.
67.207 Mental.
67.209 Neurologic.
67.211 Cardiovascular.
67.213 General medical condition.
67.215 Discretionary issuance.

Subpart D—Third-Class Airman Medical Certificate

67.301 Eligibility.
67.303 Eye.
67.305 Ear, nose, throat, and equilibrium.
67.307 Mental.
67.309 Neurologic.
67.311 Cardiovascular.
67.313 General medical condition.
67.315 Discretionary issuance.

Subpart E—Certification Procedures

67.401 Special issuance of medical certificates.
67.403 Applications, certificates, logbooks, reports, and records: falsification, reproduction, or alteration.
67.405 Medical examinations: Who may give.
67.407 Delegation of authority.
67.409 Denial of medical certificate.
67.411 Medical certificates by flight surgeons of Armed Forces.
67.413 Medical records.
67.415 Return of medical certificate after suspension or revocation.

Authority: 49 U.S.C. App. 1354, 1355, 1421, 1422, and 1427; 49 U.S.C. 106(g).

Subpart A—General

§ 67.01 Applicability.

This part prescribes the medical standards and certification procedures for issuing medical certificates for airmen and for remaining eligible for a medical certificate.

§ 67.03 Issue.

Except as provided in § 67.05, an applicant who meets the medical standards prescribed in this part, based on medical examination and evaluation of the applicant's history and condition, is entitled to an appropriate medical certificate.

§ 67.05 Certification of foreign airmen.

A person who is neither a United States citizen nor a resident alien is issued a certificate under this part, outside the United States, only when the Administrator finds that the certificate is needed for operation of a U.S.-registered aircraft.

§ 67.07 Access to the National Driver Register.

At the time of application for a certificate issued under this part, each person who applies for a medical certificate shall execute an express consent form authorizing the Administrator to request the chief driver licensing official of any state designated by the Administrator to transmit information contained in the National Driver Register about the person to the Administrator. The Administrator shall make information received from the National Driver Register, if any, available on request to the person for review and written comment.

Subpart B—First-Class Airman Medical Certificate

§ 67.101 Eligibility.

To be eligible for a first-class airman medical certificate, and to remain eligible for a first-class airman medical certificate, a person must meet the requirements of this subpart.

§ 67.103 Eye.

Eye standards for a first-class airma medical certificate include, but are not limited to:

(a) Distant visual acuity of 20/20 or better in each eye separately with or without corrective lenses. If corrective lenses (spectacles or contact lenses) are necessary for 20/20 vision, the person may be eligible only on the condition that corrective lenses are worn while exercising the privileges of an airman certificate.

(b) Near vision of 20/40, Snellen equivalent, at 16 inches in each eye separately, with or without corrective lenses. If age 50 or older, near vision of 20/40, Snellen equivalent, at both 16 inches and 32 inches in each eye separately, with or without corrective lenses.

(c) Ability to perceive those colors necessary for the safe performance of airman duties.

(d) Normal fields of vision.

(e) No acute or chronic pathological condition of either eye or adnexa that interferes with the proper function of an eye, that may reasonably be expected to progress to that degree, or that may reasonably be expected to be aggravated by flying.

(f) Bifoveal fixation and vergence-phoria relationship sufficient to prevent a break in fusion under conditions that may reasonably be expected to occur in performing airman duties. Tests for the factors named in this paragraph are not required except for persons found to have more than 1 prism diopter of hyperphoria, 6 prism diopters of esophoria, or 6 prism diopters of exophoria. If any of these values are exceeded, the Federal Air Surgeon may require the person to be examined by a qualified eye specialist to determine if there is bifoveal fixation and an adequate vergence-phoria relationship. However, if otherwise eligible, the person is issued a medical certificate pending the results of the examination.

§ 67.105 Ear, nose, throat, and equilibrium.

Ear, nose, throat, and equilibrium standards for a first-class airman medical certificate include, but are not limited to:

(a) The person shall—

(1) Demonstrate an ability to hear an average conversational voice in a quiet room, using both ears, at a distance of 6 feet from the examiner, with the back turned to the examiner;

(2) Demonstrate an acceptable understanding of speech as determined by audiometric speech discrimination testing to a score of at least 70 percent obtained in one ear or in a sound field environment; or

(3) Provide acceptable results of pure tone audiometric testing of unaided hearing acuity according to the following table of worst acceptable thresholds, using the calibration standards of the American National Standards Institute, 1969:

Frequency (Hz)	500 Hz	1000 Hz	2000 Hz	3000 Hz
Better ear (Db)	35	30	30	40
Poorer ear (Db)	35	50	50	60

(b) No disease or condition of the middle or internal ear, nose, oral cavity, pharynx, or larynx that—

(1) Interferes with, or is aggravated by, flying or may reasonably be expected to do so or

(2) Interferes with, or may reasonably be expected to interfere with, clear and effective speech communication.

(c) No disease or condition manifested by, or may reasonably be expected to be manifested by, vertigo or a disturbance of equilibrium.

§ 67.107 Mental.

Mental standards for a first-class airman medical certificate include, but are not limited to:

(a) No established medical history or clinical diagnosis of any of the following:

(1) A personality disorder that is severe enough to have repeatedly manifested itself by overt acts;

(2) A psychosis. As used in this section, "psychosis" refers to a mental disorder in which the individual has manifested psychotic symptoms or to a mental disorder in which an individual may reasonably be expected to manifest psychotic symptoms;

(3) A bipolar disorder; or

(4) Substance dependence, except where there is established clinical evidence, satisfactory to the Federal Air Surgeon, of recovery, including sustained total abstinence from alcohol for not less than the preceding 2 years in the case of alcohol dependence. In the case of other substance dependence, recovery must include sustained total abstinence from that substance for not less than the preceding 5 years. As used in this section—

(i) "Substance" includes: alcohol; other sedatives and hypnotics; muscle relaxants; anxiolytics; opioids; central nervous system stimulants such as cocaine, amphetamines, and similarly acting sympathomimetics; hallucinogens; phencyclidine or similarly acting arylcyclohexylamines; cannabis; volatile solvents and gases; and other psychoactive drugs and chemicals and

(ii) "Substance dependence" means a condition in which a person is dependent on a substance, other than tobacco or ordinary xanthine-containing (e.g., caffeine) beverages, as evidenced by—

(A) Increased tolerance;

(B) Manifestation of withdrawal symptoms;

(C) Impaired control of use; or

(D) Continued use despite damage to physical health or impairment of social, personal, or occupational functioning.

(b) No substance abuse defined as:

(1) Use of alcohol within the preceding 2 years in a situation in which that use is physically hazardous, if there has been at any other time an instance of the use of alcohol or another substance also in a situation in which that use was physically hazardous;

(2) Use of a substance other than alcohol within the preceding 5 years in a situation in which that use is physically hazardous, if there has been at any other time an instance of the use of that substance, alcohol, or another substance also in a situation in which that use was physically hazardous;

(3) Use of a prohibited drug defined in appendix I of part 121 of this chapter within the preceding 5 years; or

(4) Misuse of a substance, within the preceding 2 years if alcohol or within the preceding 5 years if another substance, that the Federal Air Surgeon, based on case history and appropriate, qualified medical judgment, finds—

(i) Makes the person unable to safely perform the duties or exercise the privileges of the airman certificate applied for or held or

(ii) May reasonably be expected, for the maximum duration of the airman medical certificate applied for or held, to make the person unable to perform those duties or exercise those privileges.

(c) No other personality disorder, neurosis, or other mental condition that the Federal Air Surgeon, based on the case history and appropriate, qualified medical judgment relating to the condition involved, finds—

(1) Makes the person unable to safely perform the duties or exercise the privileges of the airman certificate applied for or held or

(2) May reasonably be expected, for the maximum duration of the airman medical certificate applied for or held, to make the person unable to perform those duties or exercise those privileges.

§ 67.109 Neurologic.

Neurologic standards for a first-class airman medical certificate include, but are not limited to:

(a) No established medical history or clinical diagnosis of any of the following:

(1) Epilepsy;

(2) A single seizure;

(3) A disturbance of consciousness without satisfactory medical explanation of the cause; or

(4) A transient loss of control of nervous system function(s) without satisfactory medical explanation of the cause.

(b) No other seizure disorder, disturbance of consciousness, or neurologic condition that the Federal Air Surgeon, based on the case history and appropriate, qualified medical judgment relating to the condition involved, finds—

(1) Makes the person unable to safely perform the duties or exercise the privileges of the airman certificate applied for or held or

(2) May reasonably be expected, for the maximum duration of the airman medical certificate applied for or held, to make the person unable to perform those duties or exercise those privileges.

§ 67.111 Cardiovascular.

Cardiovascular standards for a first-class airman medical certificate include, but are not limited to:

(a) No established medical history or clinical diagnosis of any of the following:

(1) Myocardial infarction;

(2) Angina pectoris;

(3) Coronary heart disease that has required treatment or, if untreated, that has been symptomatic or clinically significant;

(4) Cardiac valve replacement;

(5) Permanent cardiac pacemaker implantation; or

(6) Heart replacement;

(b) The person's average systolic blood pressure while sitting must not exceed 150 millimeters of mercury, and the person's average diastolic blood pressure while sitting must not exceed 95 millimeters of mercury. If antihypertensive medication is used or is needed to meet the requirement of this section, a person may be issued a

certificate only after a current (within the preceding 6 months) satisfactory medical assessment, prescribed by the Federal Air Surgeon. This medical assessment may include, but is not limited to, blood pressure control; the medication used; the presence or absence of cardiovascular risk factors other than hypertension; other vascular disease; and the presence or absence of disease of "target" organs (e.g., heart, brain, kidneys, eyes).

(c) The person must not use anticoagulant medication.

(d) A person applying for first-class medical certification must demonstrate an absence of myocardial infarction and other clinically significant abnormality on electrocardiographic examination:

(1) At the first application after reaching the 35th birthday, unless the person has satisfied § 67.211(d)(1) and

(2) On an annual basis after reaching the 40th birthday, unless within the preceding 9 months an electrocardiogram (ECG) has been provided as part of an application for medical certification.

(e) An ECG will satisfy a requirement of paragraph (d) of this section if it is dated no earlier than 60 days before the date of the application it is to accompany, and was performed and transmitted according to acceptable standards and techniques.

(f) At the first examination after reaching the 50th birthday and annually thereafter, the level of total blood cholesterol must be determined. If the person's total blood cholesterol is determined to be 300 milligrams per deciliter or more, the Federal Air Surgeon may require the person to submit reports of additional examinations to determine if disease exists. However, if otherwise eligible, the person is issued a medical certificate pending the results of those additional examinations.

§ 67.113 General medical condition.

The general medical standards for a first-class airman medical certificate are:

(a) No established medical history or clinical diagnosis of diabetes mellitus that requires insulin or any other hypoglycemic drug for control.

(b) No other organic, functional, or structural disease, defect, or limitation that the Federal Air Surgeon, based on the case history and appropriate, qualified medical judgment relating to the condition involved, finds—

(1) Makes the person unable to safely perform the duties or exercise the privileges of the airman certificate applied for or held or

(2) May reasonably be expected, for the maximum duration of the airman medical certificate applied for or held, to make the person unable to perform those duties or exercise those privileges.

§ 67.115 Discretionary issuance.

A person who does not meet the provisions of §§ 67.103 through 67.113 of this subpart may apply for the discretionary issuance of a certificate under § 67.401.

Subpart C—Second-Class Airman Medical Certificate

§ 67.201 Eligibility.

To be eligible for a second-class airman medical certificate, and to remain eligible for a second-class airman medical certificate, a person must meet the requirements of this subpart.

§ 67.203 Eye.

Eye standards for a second-class airman medical certificate include, but are not limited to:

(a) Distant visual acuity of 20/20 or better in each eye separately with or without corrective lenses. If corrective lenses (spectacles or contact lenses) are necessary for 20/20 vision, the person may be eligible only on the condition that corrective lenses are worn while exercising the privileges of an airman certificate.

(b) Near vision of 20/40, Snellen equivalent, at 16 inches in each eye separately, with or without corrective lenses. If age 50 or older, near vision of 20/40, Snellen equivalent, at both 16 inches and 32 inches in each eye separately, with or without corrective lenses.

(c) Ability to perceive those colors necessary for the safe performance of airman duties.

(d) Normal fields of vision.

(e) No acute or chronic pathological condition of either eye or adnexa that interferes with the proper function of an eye, that may reasonably be expected to progress to that degree, or that may reasonably be expected to be aggravated by flying.

(f) Bifoveal fixation and vergence-phoria relationship sufficient to prevent a break in fusion under conditions that may reasonably be expected to occur in performing airman duties. Tests for the factors named in this paragraph are not required except for persons found to have more than 1 prism diopter of hyperphoria, 6 prism diopters of esophoria, or 6 prism diopters of exophoria. If any of these values are exceeded, the Federal Air Surgeon may require the person to be examined by a qualified eye specialist to determine if there is bifoveal fixation and an adequate vergence-phoria relationship. However, if otherwise eligible, the person is issued a medical certificate pending the results of the examination.

§ 67.205 Ear, nose, throat, and equilibrium.

Ear, nose, throat, and equilibrium standards for a second-class airman medical certificate include, but are not limited to:

(a) The person shall—

(1) Demonstrate an ability to hear an average conversational voice in a quiet room, using both ears, at a distance of 6 feet from the examiner, with the back turned to the examiner;

(2) Demonstrate an acceptable understanding of speech as determined by audiometric speech discrimination testing to a score of at least 70 percent obtained in one ear or in a sound field environment; or

(3) Provide acceptable results of pure tone audiometric testing of unaided hearing acuity according to the following table of worst acceptable thresholds, using the calibration standards of the American National Standards Institute, 1969:

Frequency (Hz)	500 Hz	1000 Hz	2000 Hz	3000 Hz
Better ear (Db)	35	30	30	40
Poorer ear (Db)	35	50	30	60

(b) No disease or condition of the middle or internal ear, nose, oral cavity, pharynx, or larynx that—

(1) Interferes with, or is aggravated by, flying or may reasonably be expected to do so or

(2) Interferes with, or may reasonably be expected to interfere with, clear and effective speech communication.

(c) No disease or condition manifested by, or may reasonably be expected to be manifested by, vertigo or a disturbance of equilibrium.

§ 67.207 Mental.

Mental standards for a second-class airman medical certificate include, but are not limited to:

(a) No established medical history or clinical diagnosis of any of the following:

(1) A personality disorder that is severe enough to have repeatedly manifested itself by overt acts;

(2) A psychosis. As used in this section, "psychosis" refers to a mental disorder in which the individual has manifested psychotic symptoms or to a mental disorder in which an individual may reasonably be expected to manifest psychotic symptoms;

(3) A bipolar disorder; or

(4) Substance dependence, except where there is established clinical evidence, satisfactory to the Federal Air Surgeon, of recovery, including sustained total abstinence from alcohol for not less than the preceding 2 years in the case of alcohol dependence. In the case of other substance dependence, recovery must include sustained total abstinence from that substance for not less than the preceding 5 years. As used in this section—

(i) "Substance" includes: alcohol; other sedatives and hypnotics; muscle relaxants; anxiolytics; opioids; central nervous system stimulants such as cocaine, amphetamines, and similarly acting sympathomimetics; hallucinogens; phencyclidine or similarly acting arylcyclohexylamines; cannabis; volatile solvents and gases; and other psychoactive drugs and chemicals; and

(ii) "Substance dependence" means a condition in which a person is dependent on a substance, other than tobacco or ordinary xanthine-containing (e.g., caffeine) beverages, as evidenced by—

(A) Increased tolerance;

(B) Manifestation of withdrawal symptoms;

(C) Impaired control of use; or

(D) Continued use despite damage to physical health or impairment of social, personal, or occupational functioning.

(b) No substance abuse defined as:

(1) Use of alcohol within the preceding 2 years in a situation in which that use is physically hazardous, if there has been at any other time an instance of the use of alcohol or another substance also in a situation in which that use was physically hazardous;

(2) Use of a substance other than alcohol within the preceding 5 years in a situation in which that use is physically hazardous, if there has been at any other time an instance of the use of that substance, alcohol, or another substance also in a situation in which that use was physically hazardous;

(3) Use of a prohibited drug defined in Appendix I of part 121 of this chapter within the preceding 5 years; and

(4) Misuse of a substance, within the preceding 2 years if alcohol or within the preceding 5 years if another substance, that the Federal Air Surgeon, based on case history and appropriate, qualified medical judgment, finds—

(i) Makes the person unable to safely perform the duties or exercise the privileges of the airman certificate applied for or held or

(ii) May reasonably be expected, for the maximum duration of the airman medical certificate applied for or held, to make the person unable to perform those duties or exercise those privileges.

(c) No other personality disorder, neurosis, or other mental condition that the Federal Air Surgeon, based on the case history and appropriate, qualified medical judgment relating to the condition involved, finds—

(1) Makes the person unable to safely perform the duties or exercise the privileges of the airman certificate applied for or held or

(2) May reasonably be expected, for the maximum duration of the airman medical certificate applied for or held, to make the person unable to perform those duties or exercise those privileges.

§ 67.209 Neurologic.

Neurologic standards for a second-class airman medical certificate include, but is not limited to:

(a) No established medical history or clinical diagnosis of any of the following:

(1) Epilepsy;

(2) A single seizure;

(3) A disturbance of consciousness without satisfactory medical explanation of the cause; or

(4) A transient loss of control of nervous system function(s) without satisfactory medical explanation of the cause;

(b) No other seizure disorder, disturbance of consciousness, or neurologic condition that the Federal Air Surgeon, based on the case history and appropriate, qualified medical judgment relating to the condition involved, finds—

(1) Makes the person unable to safely perform the duties or exercise the privileges of the airman certificate applied for or held or

(2) May reasonably be expected, for the maximum duration of the airman medical certificate applied for or held, to make the person unable to perform those duties or exercise those privileges.

§ 67.211 Cardiovascular.

Cardiovascular standards for a second-class medical certificate include, but are not limited to:

(a) No established medical history or clinical diagnosis of any of the following:

(1) Myocardial infarction;

(2) Angina pectoris;

(3) Coronary heart disease that has required treatment or, if untreated, that has been symptomatic or clinically significant;

(4) Cardiac valve replacement;

(5) Permanent cardiac pacemaker implantation; or

(6) Heart replacement;

(b) The person's average systolic blood pressure while sitting must not exceed 150 millimeters of mercury, and the person's average diastolic blood pressure while sitting must not exceed 95 millimeters of mercury. If antihypertensive medication is used or is needed to meet the requirement of this section, a person may be issued a certificate only after a current (within the preceding 6 months) satisfactory medical assessment, prescribed by the Federal Air Surgeon, of blood pressure control; of the medication used; of the presence or absence of cardiovascular risk factors other than hypertension; of other vascular disease; and of the presence or absence of disease of "target" organs (e.g., heart, brain, kidneys, or eyes).

(c) The person must not use anticoagulant medication.

(d) A person applying for second-class medical certification must demonstrate an absence of myocardial infarction and other clinically significant abnormality on electrocardiographic examination:

(1) At the first application after reaching the 35th birthday, unless the person has satisfied § 67.111(d)(1) and

(2) On a biennial basis after reaching the 40th birthday, unless within the preceding 15 months an electrocardiogram (ECG) has been provided as part of an application for medical certification.

(e) An ECG will satisfy a requirement of paragraph (d) of this section if it is dated no earlier than 60 days before the date of the application it is to accompany, and was performed and transmitted according to acceptable standards and techniques.

§ 67.213 General medical condition.

The general medical standards for a second-class airman medical certificate are:

(a) No established medical history or clinical diagnosis of diabetes mellitus that requires insulin or any other hypoglycemic drug for control.

(b) No other organic, functional, or structural disease, defect, or limitation that the Federal Air Surgeon, based on the case history and appropriate, qualified medical judgment relating to the condition involved, finds—

(1) Makes the person unable to safely perform the duties or exercise the privileges of the airman certificate applied for or held or

(2) May reasonably be expected, for the maximum duration of the airman medical certificate applied for or held, to make the person unable to perform those duties or exercise those privileges.

§ 67.215 Discretionary issuance.

A person who does not meet the provisions of §§ 67.203 through 67.213 of this subpart may apply for the discretionary issuance of a certificate under § 67.401.

Subpart D—Third-Class Airman Medical Certificate

§ 67.301 Eligibility.

To be eligible for a third-class airman medical certificate, or to remain eligible for a third-class airman medical certificate, a person must meet the requirements of this subpart.

§ 67.303 Eye.

Eye standards for a third-class airman medical certificate include, but are not limited to:

(a) Distant visual acuity of 20/40 or better in each eye separately with or without corrective lenses. If corrective lenses (spectacles or contact lenses) are necessary for 20/40 vision, the person may be eligible only on the condition that corrective lenses are worn while exercising the privileges of an airman certificate.

(b) Near vision of 20/40, Snellen equivalent, at 16 inches in each eye separately, with or without corrective lenses.

(c) Ability to perceive those colors necessary for the safe performance of airman duties.

(d) No acute or chronic pathological condition of either eye or adnexa that interferes with the proper function of an eye, that may reasonably be expected to progress to that degree, or that may reasonably be expected to be aggravated by flying.

§ 67.305 Ear, nose, throat, and equilibrium.

Ear, nose, throat, and equilibrium standards for a third-class airman medical certificate include, but are not limited to:

(a) The person shall—

(1) Demonstrate an ability to hear an average conversational voice in a quiet room, using both ears, at a distance of 6 feet from the examiner, with the back turned to the examiner;

(2) Demonstrate an acceptable understanding of speech as determined by audiometric speech discrimination testing to a score of at least 70 percent obtained in one ear or in a sound field environment; or

(3) Provide acceptable results of pure tone audiometric testing of unaided hearing acuity according to the following table of worst acceptable thresholds, using the calibration standards of the American National Standards Institute, 1969:

Frequency (Hz)	500 Hz	1000 Hz	2000 Hz	3000 Hz
Better ear (Db)	35	30	30	40
Poorer ear (Db)	35	50	50	60

(b) No disease or condition of the middle or internal ear, nose, oral cavity, pharynx, or larynx that—

(1) Interferes with, or is aggravated by, flying or may reasonably be expected to do so or

(2) Interferes with clear and effective speech communication.

(c) No disease or condition manifested by, or may reasonably be expected to be manifested by, vertigo or a disturbance of equilibrium.

§ 67.307 Mental.

Mental standards for a third-class airman medical certificate include, but are not limited to:

(a) No established medical history or clinical diagnosis of any of the following:

(1) A personality disorder that is severe enough to have repeatedly manifested itself by overt acts;

(2) A psychosis. As used in this section, "psychosis" refers to a mental disorder in which the individual has manifested psychotic symptoms or to a mental disorder in which an individual may reasonably be expected to manifest psychotic symptoms;

(3) A bipolar disorder; or

(4) Substance dependence, except where there is established clinical evidence, satisfactory to the Federal Air Surgeon, of recovery, including sustained total abstinence from alcohol for not less than the preceding 2 years in the case of alcohol dependence. In the case of other substance dependence, recovery must include sustained total abstinence from that substance for not less than the preceding 5 years. As used in this section—

(i) "Substance" includes: alcohol; other sedatives and hypnotics; muscle relaxants; anxiolytics; opioids; central nervous system stimulants such as cocaine, amphetamines, and similarly acting sympathomimetics; hallucinogens; phencyclidine or similarly acting arylcyclohexylamines; cannabis; volatile solvents and gases; and other psychoactive drugs and chemicals and

(ii) "Substance dependence" means a condition in which a person is dependent on a substance, other than tobacco or ordinary xanthine-containing (e.g., caffeine) beverages, as evidenced by—

(A) Increased tolerance;

(B) Manifestation of withdrawal symptoms;

(C) Impaired control of use; or

(D) Continued use despite damage to physical health or impairment of social, personal, or occupational functioning.

(b) No substance abuse defined as:

(1) Use of alcohol within the preceding 2 years in a situation in which that use is physically hazardous, if there has been at any other time an instance of the use of alcohol or another substance also in a situation in which that use was physically hazardous;

(2) Use of a substance other than alcohol within the preceding 5 years in a situation in which that use is physically hazardous, if there has been at any other time an instance of the use of that substance, alcohol, or another substance also in a situation in which that use was physically hazardous;

(3) Use of a prohibited drug defined in Appendix I of part 121 of this chapter within the preceding 5 years; and

(4) Misuse of a substance, within the preceding 2 years if alcohol or within the preceding 5 years if another substance, that the Federal Air Surgeon, based on case history and appropriate, qualified medical judgment, finds—

(i) Makes the person unable to safely perform the duties or exercise the privileges of the airman certificate applied for or held or

(ii) May reasonably be expected, for the maximum duration of the airman medical certificate applied for or held, to make the person unable to perform those duties or exercise those privileges.

(c) No other personality disorder, neurosis, or other mental condition that the Federal Air Surgeon, based on the case history and appropriate, qualified medical judgment relating to the condition involved, finds—

(1) Makes the person unable to safely perform the duties or exercise the privileges of the airman certificate applied for or held or

(2) May reasonably be expected, for the maximum duration of the airman medical certificate applied for or held, to make the person unable to perform those duties or exercise those privileges.

§ 67.309 Neurologic.

Neurologic standards for a third-class airman medical certificate include, but are not limited to:

(a) No established medical history or clinical diagnosis of any of the following:

(1) Epilepsy;

(2) A single seizure;

(3) A disturbance of consciousness without satisfactory medical explanation of the cause; or

(4) A transient loss of control of nervous system function(s) without satisfactory medical explanation of the cause; or

(b) No other seizure disorder, disturbance of consciousness, or neurologic condition that the Federal Air Surgeon, based on the case history and appropriate, qualified medical judgment relating to the condition involved, finds—

(1) Makes the person unable to safely perform the duties or exercise the privileges of the airman certificate applied for or held or

(2) May reasonably be expected, for the maximum duration of the airman medical certificate applied for or held, to make the person unable to perform those duties or exercise those privileges.

§ 67.311 Cardiovascular.

Cardiovascular standards for a third-class airman medical certificate include, but are not limited to:

(a) No established medical history or clinical diagnosis of any of the following:

(1) Myocardial infarction;

(2) Angina pectoris;

(3) Coronary heart disease that has required treatment or, if untreated, that has been symptomatic or clinically significant;

(4) Cardiac valve replacement;

(5) Permanent cardiac pacemaker implantation; or

(6) Heart replacement.

(b) The person's average systolic blood pressure while sitting must not exceed 150 millimeters of mercury, and the person's average diastolic blood pressure while sitting must not exceed 95 millimeters of mercury. If antihypertensive medication is used or is needed to meet the requirement of this section, a person may be issued a certificate only after a current (within the preceding 6 months) satisfactory medical assessment, prescribed by the Federal Air Surgeon, of blood pressure control; of the medication used; of the presence or absence of cardiovascular risk factors other than hypertension; of other vascular disease; and of the presence or absence of disease of "target" organs (e.g., heart, brain, kidneys, or eyes).

(c) The person must not use anticoagulant medication.

§ 67.313 General medical condition.

The general medical standards for a third-class airman medical certificate are:

(a) No established medical history or clinical diagnosis of diabetes mellitus that requires insulin or any other hypoglycemic drug for control.

(b) No other organic, functional, or structural disease, defect, or limitation that the Federal Air Surgeon, based on the case history and appropriate, qualified medical judgment relating to the condition involved, find—

(1) Makes the person unable to safely perform the duties or exercise the privileges of the airman certificate applied for or held or

(2) May reasonably be expected, for the maximum duration of the airman medical certificate applied for or held, to make the person unable to perform those duties or exercise those privileges.

§ 67.315 Discretionary issuance.

A person who does not meet the provisions of §§ 67.303 through 67.313 of this subpart may apply for the discretionary issuance of a certificate under § 67.401.

Subpart E—Certification Procedures

§ 67.401 Special issuance of medical certificates.

(a) At the discretion of the Federal Air Surgeon, an Authorization for Special Issuance of a Medical Certificate (Authorization), valid for a specified period, may be granted to a person who does not meet the provisions of subparts B, C, or D of this part if the person shows to the satisfaction of the Federal Air Surgeon that the duties authorized by the class of medical certificate applied for can be performed without endangering public safety during the period in which the Authorization would be in force. The Federal Air Surgeon may authorize a special medical flight test, practical test, or medical evaluation for this purpose. A medical certificate of the appropriate class may be issued to a person who does not meet the provisions of subparts B, C, or D of this part if that person possesses a valid Authorization and is otherwise eligible. An airman medical certificate issued in accordance with this section shall expire no later than the end of the validity period or upon the withdrawal of the Authorization upon which it is based. At the end of its specified validity period, for grant of a new Authorization, the person must again show to the satisfaction of the Federal Air Surgeon that the duties authorized by the class of medical certificate applied for can be performed without endangering public safety during the period in which the Authorization would be in force.

(b) At the discretion of the Federal Air Surgeon, a Statement of Demonstrated Ability (SODA) may be granted, instead of an Authorization, to a person whose disqualifying condition is static or nonprogressive and who has been found capable of performing airman duties without endangering public safety. A SODA does not expire and authorizes a designated Aviation Medical Examiner to issue a medical certificate of a specified class if the examiner finds that the condition described on its face has not adversely changed.

(c) In granting an Authorization or a SODA, the Federal Air Surgeon may consider the person's operational experience and any medical facts that may affect the ability of the person to perform airman duties including—

(1) The combined effect on the person of failure to meet more than one requirement of this part and

(2) The prognosis derived from professional consideration of all available information regarding the person.

(d) In granting an Authorization under this section, the Federal Air Surgeon specifies the class of medical certificate authorized to be issued and may do any or all of the following:

(1) Limit the duration of the Authorization;

(2) Condition the granting of a new Authorization on the results of subsequent medical tests, examinations, or evaluations;

(3) State on the Authorization, and any certificate based upon it, any operational limitation needed for safety; or

(4) Condition the continued effect of an Authorization, and any second- or third-class medical certificate based upon it, on compliance with a statement of functional limitations issued to the

person in coordination with the Director of Flight Standards or the Director's designee.

(e) In determining whether an Authorization or SODA should be granted to an applicant for a third-class medical certificate, the Federal Air Surgeon considers the freedom of an airman, exercising the privileges of a private pilot certificate, to accept reasonable risks to his or her person and property that are not acceptable in the exercise of commercial or airline transport privileges, and, at the same time, considers the need to protect the safety of persons and property in other aircraft and on the ground.

(f) An Authorization or SODA granted under the provisions of this section to a person who does not meet the applicable provisions of subparts B, C, or D of this part may be withdrawn, at the discretion of the Federal Air Surgeon, at any time if—

(1) There is adverse change in the holder's medical condition;

(2) The holder fails to comply with a statement of functional limitations or operational limitations issued as a condition of certification under this section;

(3) Public safety would be endangered by the holder's exercise of airman privileges;

(4) The holder fails to provide medical information reasonably needed by the Federal Air Surgeon for certification under this section; or

(5) The holder makes or causes to be made a fraudulent or intentionally false statement or an incorrect statement—

(i) In support of his or her request for an Authorization or SODA or

(ii) In any entry in any logbook, record, or report that is kept, made, or used, to show compliance with any requirement for an Authorization or SODA.

(g) A person who has been granted an Authorization or SODA under this section based on a special medical flight or practical test need not take the test again during later physical examinations unless the Federal Air Surgeon determines or has reason to believe that the physical deficiency has or may have degraded to a degree to require another special medical flight or practical test.

(h) The authority of the Federal Air Surgeon under this section is also exercised by the Manager, Aeromedical Certification Division and each Regional Flight Surgeon.

(i) If an Authorization or SODA is withdrawn under paragraph (f) of this section the following procedures apply:

(1) The holder of the Authorization or SODA will be personally served or mailed a letter of withdrawal, stating the reason for the action;

(2) By not later than 60 days after the service or mailing of the letter of withdrawal, the holder of the Authorization or SODA may request, in writing, that the Federal Air Surgeon provide for review of the decision to withdraw. The request for review may be accompanied by supporting medical evidence;

(3) Within 60 days of receipt of a request for review, a written final decision either affirming or reversing the decision to withdraw will be issued; and

(4) A medical certificate rendered invalid pursuant to a withdrawal, in accordance with paragraph (a) of this section, shall be surrendered to the Administrator upon request.

(j) No grant of a special issuance made prior to (the effective date of this rule) may be used to obtain a medical certificate after the earlier of the following dates:

(1) (One year after the effective date of this rule) or

(2) The date on which the holder of such special issuance is required to provide additional information to the FAA as a condition for continued medical certification.

§ 67.403 Applications, certificates, logbooks, reports, and records: falsification, reproduction, or alteration.

(a) No person may make or cause to be made—

(1) A fraudulent or intentionally false statement on any application for a medical certificate or on a request for any Authorization for Special Issuance of a Medical Certificate (Authorization) or Statement of Demonstrated Ability (SODA) under this part;

(2) A fraudulent or intentionally false entry in any logbook, record, or report that is kept, made, or used, to show compliance with any requirement for any medical certificate or for any Authorization or SODA under this part;

(3) A reproduction, for fraudulent purposes, of any medical certificate under this part; or

(4) An alteration of any medical certificate under this part.

(b) The commission by any person of an act prohibited under paragraph (a) of this section is a basis for—

(1) Suspending or revoking all airman, ground instructor, and medical certificates and ratings held by that person;

(2) Withdrawing all Authorizations or SODA's held by that person; and

(3) Denying all applications for medical certification and requests for Authorizations or SODA's.

(c) The making of an incorrect statement in support of any application for a medical certificate or request for any Authorization or SODA or the making of an incorrect entry in any logbook, record, or report that is kept, made, or used, to show compliance with any requirement for any medical certificate or any Authorization or SODA is a basis for suspending or revoking the medical certificate or withdrawing the Authorization or SODA or for denying an application for medical certification or a request for an Authorization or SODA.

§ 67.405 Medical examinations: Who may give.

(a) *First-class.* Any aviation medical examiner who is specifically designated for the purpose may give the examination for the first-class certificate. Any interested person may obtain a list of these aviation medical examiners, in any area, from the FAA Regional Flight Surgeon of the region in which the area is located.

(b) *Second- and third-class.* Any aviation medical examiner may give the examination for the second- or third-class certificate. Any interested person may obtain a list of aviation medical examiners, in any area, from the FAA Regional Flight Surgeon of the region in which the area is located.

§ 67.407 Delegation of authority.

(a) The authority of the Administrator, under section 602 of the Federal Aviation Act of 1958 (49 U.S.C. App. 1422), to issue or deny medical certificates is delegated to the Federal Air Surgeon to the extent necessary to—

(1) Examine applicants for and holders of medical certificates to determine whether they meet applicable medical standards and

(2) Issue, renew, and deny medical certificates, and issue, renew, deny, and withdraw Authorizations for Special Issuance of a Medical Certificate and Statements of Demonstrated Ability to a person based upon meeting or failing to meet applicable medical standards.

(b) Subject to limitations in this chapter, the delegated functions of the Federal Air Surgeon to examine applicants for and holders of medical certificates for compliance with applicable medical standards and to issue, renew, and deny medical certificates are also delegated to aviation medical examiners and to authorized representatives of the Federal Air Surgeon within the FAA.

(c) The authority of the Administrator, under subsection 314(b) of the Federal Aviation Act of 1958 (49 U.S.C. App. 1355(b)), to reconsider the action of an

aviation medical examiner is delegated to the Federal Air Surgeon; the Manager, Aeromedical Certification Division; and each Regional Flight Surgeon. Where the person does not meet the standards of §§ 67.107(c), 67.109(b), 67.113(b), 67.207(c), 67.209(b), 67.213(b), 67.307(c), 67.309(b), or 67.313(b), any action taken under this paragraph other than by the Federal Air Surgeon is subject to reconsideration by the Federal Air Surgeon. A certificate issued by an aviation medical examiner is considered to be affirmed as issued unless an FAA official named in this paragraph (authorized official) reverses that issuance within 60 days after the date of issuance. However, if within 60 days after the date of issuance an authorized official requests the certificate holder to submit additional medical information, an authorized official may reverse the issuance within 60 days after receipt of the requested information.

(d) The authority of the Administrator, under section 609 of the Federal Aviation Act of 1958 (49 U.S.C. App. 1429), to re-examine any civil airman to the extent necessary to determine an airman's qualification to continue to hold an airman medical certificate, is delegated to the Federal Air Surgeon and his or her authorized representatives within the FAA.

§ 67.409 Denial of medical certificate.

(a) Any person who is denied a medical certificate by an aviation medical examiner may, within 30 days after the date of the denial, apply in writing and in duplicate to the Federal Air Surgeon, Attention: Manager, Aeromedical Certification Division, AAM–300, Federal Aviation Administration, P.O. Box 26080, Oklahoma City, Oklahoma 73126, for reconsideration of that denial. If the person does not ask for reconsideration during the 30-day period after the date of the denial, he or she is considered to have withdrawn the application for a medical certificate.

(b) The denial of a medical certificate—

(1) By an aviation medical examiner is not a denial by the Administrator under section 602 of the Federal Aviation Act of 1958 (49 U.S.C. App. 1422);

(2) By the Federal Air Surgeon is considered to be a denial by the Administrator under section 602 of the Act; and

(3) By the Manager, Aeromedical Certification Division, or a Regional Flight Surgeon is considered to be a denial by the Administrator under section 602 of the Act except where the applicant does not meet the standards of §§ 67.107(c), 67.109(b), or 67.113(b); 67.207(c), 67.209(b), or 67.213(b); or 67.307(c), 67.309(b), or 67.313(b).

(c) Any action taken under § 67.407(c) that wholly or partly reverses the issue of a medical certificate by an aviation medical examiner is the denial of a medical certificate under paragraph (b) of this section.

(d) If the issue of a medical certificate is wholly or partly reversed by the Federal Air Surgeon; the Manager, Aeromedical Certification Division; or a Regional Flight Surgeon, the person holding that certificate shall surrender it, upon request of the FAA.

§ 67.411 Medical certificates by flight surgeons of Armed Forces.

(a) The FAA has designated flight surgeons of the Armed Forces on specified military posts, stations, and facilities, as aviation medical examiners.

(b) An aviation medical examiner described in paragraph (a) of this section may give physical examinations for the FAA medical certificates to applicants who are on active duty or who are, under Department of Defense medical programs, eligible for FAA medical certifications as civil airmen. In addition, such an examiner may issue or deny an appropriate FAA medical certificate in accordance with the regulations of this chapter and the policies of the FAA.

(c) Any interested person may obtain a list of the military posts, stations, and facilities at which a flight surgeon has been designated as an aviation medical examiner from the Surgeon General of the Armed Force concerned or from the Manager, Aeromedical Education Division, AAM–400, Federal Aviation Administration, P.O. Box 26082, Oklahoma City, Oklahoma 73125.

§ 67.413 Medical records.

(a) Whenever the Administrator finds that additional medical information or history is necessary to determine whether an applicant for or the holder of a medical certificate meets the medical standards for it, the Administrator requests that person to furnish that information or to authorize any clinic, hospital, physician, or other person to release to the Administrator all available information or records concerning that history. If the applicant or holder fails to provide the requested medical information or history or to authorize the release so requested, the Administrator may suspend, modify, or revoke all medical certificates the airman holds or may, in the case of an applicant, deny the application for an airman medical certificate.

(b) If an airman medical certificate is suspended, modified, or revoked under paragraph (a) of this section, that suspension, modification, or revocation remains in effect until the requested information, history, or authorization is provided to the FAA and until the Federal Air Surgeon determines whether the person meets the medical standards under this part.

§ 67.415 Return of medical certificate after suspension or revocation.

The holder of any medical certificate issued under this part that is suspended or revoked shall, upon the Administrator's request, return it to the Administrator.

Issued in Washington, D.C. on October 17, 1994.

Jon L. Jordon,

Federal Air Surgeon, Federal Aviation Administration.

[FR Doc. 94–26047 Filed 10–18–94; 8:45 am]

BILLING CODE 4910–13–P

federal register

Friday
October 21, 1994

Part III

Department of Energy

Office of the Secretary

10 CFR Part 600

Financial Assistance Rules; Implementation of OMB Circular A–110; Interim Final Rule

DEPARTMENT OF ENERGY

Office of the Secretary

10 CFR Part 600

RIN 1991–AB13

Financial Assistance Rules; Implementation of OMB Circular A–110

AGENCY: Department of Energy.

ACTION: Interim final rule.

SUMMARY: The Department of Energy (DOE) today is amending its Financial Assistance Rules (Rules) to implement Office of Management and Budget (OMB) Circular A–110, "Uniform Administrative Requirements for Grants and Agreements With Institutions of Higher Education, Hospitals, and Other Non-Profit Organizations," to reorganize the subparts of the Rules, to update citations throughout the Rules, and to change citations to conform to the reorganization.

DATES: This regulation is effective November 21, 1994. Written comments on the interim final rule must be received by December 20, 1994.

ADDRESSES: Comments should be addressed to: Gwendolyn Cowan, Director, Business and Financial Policy Division (HR–521.2), Office of Procurement and Assistance Management, U.S. Department of Energy, 1000 Independence Ave., SW, Washington, D.C. 20585.

FOR FURTHER INFORMATION CONTACT: Cherlyn Seckinger, Business and Financial Policy Division, (HR–521.2), U.S. Department of Energy, 1000 Independence Avenue, SW., Washington, D.C. 20585, (202) 586–8192.

SUPPLEMENTARY INFORMATION:

Table of Contents:

I. Introduction
II. Changes to 10 CFR Part 600
III. Explanation for "Interim Final" Rulemaking
IV. Review Under Executive Order 12612
V. Regulatory Review
VI. Review Under the Regulatory Flexibility Act
VII. Review Under the Paperwork Reduction Act
VIII. Review Under the National Environmental Policy Act
IX. Review Under Executive Order 12778
X. Public Comments

I. Introduction

OMB Circular A–110 was published in final form on November 29, 1993 (58 FR 62992) with the direction to Federal agencies that they were to implement the Circular by regulation. For DOE that implementation is taking place through this rulemaking. Subpart B of the Financial Assistance Rules (10 CFR Part 600) is DOE's implementation of the previous version of Circular A–110. In this rulemaking, Subpart B will be revised as a modified version of the published text of Circular A–110, as explained below.

As part of this rulemaking, DOE is restructuring the Financial Assistance Rules. Current Subpart E, which is DOE's implementation of the Common Rule on Uniform Administrative Requirements for Grants and Cooperative Agreements to State and Local Governments, is being moved to Subpart C. It contains the general administrative rules for awards to governmental entities and is being moved forward for more prominence. Current Subpart C is being moved to Subpart D. Current Subpart D is being moved to Subpart E. There are no substantive changes made by this rule in the text of these three Subparts except for changing the references due to the restructuring.

II. Changes to 10 CFR Part 600

Sections 600.2, 600.4, 600.5, 600.7, 600.9, 600.10, 600.14, 600.15, 600.20, 600.25, 600.26, 600.28, 600.29, 600.31, 600.32, and 600.33 of Subpart A are amended to correct the references resulting from this implementation of OMB Circular A–110 and to make some minor technical changes to revise cross-references, update citations, and reflect DOE organizational changes.

The current text of Subpart B is being revised as a modified version of OMB Circular A–110, which was published in the **Federal Register** on November 29, 1993 (58 FR 62992). A discussion of the modifications that were made to A–110 for this implementation is contained below in the section entitled "Incorporation of OMB Circular A–110 Into the Financial Assistance Rules."

Sections 600.200, 600.202, 600.203, 600.206 and 600.207 of Subpart C are amended to correct the references resulting from this implementation of OMB Circular A–110 and to correct some existing minor errors in citations and grammar.

Sections 600.302, 600.303, 600.306 and 600.314 of Subpart D are amended to correct the references resulting from this implementation of OMB Circular A–110 and to correct some existing typographical errors.

Section 600.441 of Subpart E is amended to correct a reference resulting from this implementation of OMB Circular A–110 and to correct an existing error.

Incorporation of OMB Circular A–110 Into the Financial Assistance Rules

In the process of incorporating Circular A–110 into the Financial Assistance Rules, several types of changes have been made to the text of the Circular as it was published by OMB. Those changes are categorized and discussed below.

A. Provisions Involving Change From Circular to Regulatory Language

Office of Management and Budget (OMB) Circular A–110 is a directive to all Federal agencies. Consequently, specific agency terms are not used and some of the text is phrased as OMB speaking to Federal agencies. Therefore, portions of this rulemaking have been rewritten to be phrased as the DOE speaking to affected recipients. For example, the fourth sentence of the definition of "program income" in A–110 begins: "Except as otherwise provided in Federal awarding agency regulations * * *." In this rulemaking it begins: "Except as otherwise provided in this subpart, Program regulations, or the * * *."

Those sections of the rulemaking in which changes were made from the text of A–110 to be more appropriately phrased as a rulemaking by DOE directed at affected recipients rather than as a circular by OMB directed at Federal agencies are as follows:

The words "Federal," "Federal Government," "Federal awarding agency(ies)" were changed to "DOE" or "the DOE" in the following sections of the interim final rule: In § 600.102, the definitions of the following terms: Award, closeout, cost sharing or matching, date of completion, disallowed costs, funding period, program income, project period, recipient, suspension, termination, unobligated balance; §§ 600.110; 600.111(a) and (b); 600.114(a); 600.115; 600.121(b)(1), (c), and (d); 600.122(c), (d), (e), (e)(1), (f), (h), (h)(1), (i)(1); 600.123 (c) and (c)(2); 600.124(c); 600.125(c), (e)(1), (f), (j), (k), and (m); 600.128; 600.131; 600.132(a), (b), (c), and (c)(2); 600.133(a)(1) and (2), (b); 600.134(c), (d), (e), (f)(1)(ix), (f)(4), (g), (g)(1), (g)(3), (h), (h)(2), and (h)(3); 600.136(a), (c) and (d); 600.140; 600.141; 600.144(b), (d), (e), and (e)(1)d; 600.148(c), (d), and (e); 600.148(c) and (d); 600.151(b), (f), (g), and (h); 600.152(a)(1)(i), (a)(1)(iii), (a)(1)(iv), (a)(2)(i), (a)(2)(iii), (a)(2)(iv), (a)(2)(v), (b)(1), (b)(2); 600.153(a), (b), (b)(3), (c), (d), (e), and (f); 600.161(a)(1), (a)(2), and (a)(3); 600.162(a), (a)(1), and (b); 600.171(a), (b), (c), (d), (e), and (g); 600.172(a)(1) and (b); 600.173(a) and (b).

The word "circular" was changed to "subpart" in the following sections: §§ 600.100; 600.102; 600.104; 600.114(a); 600.123(a)(7); 600.125(e); 600.144(e)(1); and 600.148(e).

The phrases "Federal awarding agency regulations" or "Federal awarding agency" were changed to the appropriate terminology to integrate the Circular into the DOE rules, such as "contracting officer," "program regulations," "terms and conditions of the award," "Subpart," or some combination of the four in the following sections: the definition of "program income" in §§ 600.101; 600.124(b), (d), (e), (f), and (h); 600.125(c)(6), (e), (e)(4), and (f); 600.126(b); 600.152(a)(1)(ii), (a)(2)(v), and (b)(3).

The words "shall" or "shall be authorized to" that refer to Federal agency or recipient were changed to "will" when referring to DOE or the recipient, as appropriate, in the following sections: §§ 600.115; 600.122(c)(3), (e)(2), (f), (h) and (j); 600.132(c); 600.134(g); and 600.152(a)(2)(i).

B. Agency Options

Circular A–110 contains a number of opportunities for Federal agencies to exercise options as to what policies they want to follow. The list and description of the options that DOE has selected are as follows:

In § 600.101 Definitions, DOE has decided to include commercial organizations in the definition of "recipient."

In § 600.104 Subawards, the applicability of this subpart to commercial organizations is included to be consistent with existing DOE policy as provided in the current subpart B.

In § 600.123(a)(6) under Cost sharing, "when required by the Federal awarding agency" is deleted to reflect that DOE is requiring cost-sharing contributions to be shown in the approved budget.

In § 600.123(b) under Cost sharing, "only with the prior approval of the Federal awarding agency" is deleted to reflect that DOE is permitting unrecovered indirect costs to be included in cost sharing.

In § 600.124(f) under Program income, "If authorized by Federal awarding agency" is deleted and replaced with "Unless program * * * provide otherwise" to reflect that DOE is permitting incidental costs to be deducted from program income unless there are contravening program regulations.

In § 600.125 (c)(5) under Revision of budget and program plans, "if approval is required by the Federal awarding agency" is deleted and replaced by "If required by program regulations" to reflect that DOE is permitting rebudgeting between direct and indirect costs without prior approval, unless program regulations provide otherwise.

In § 600.125(c)(6) under Revisions of budget and program plan "the Federal awarding agency" is deleted and replaced by "program regulations or the terms and conditions of award" to reflect that the prior approvals included in the Circulars and regulations cited in the subparagraph are required unless specifically waived in DOE program regulations or in the specific award document.

In § 600.125(e) pertaining to prior approval requirements, "Federal awarding agencies are authorized, at their option" and "Circular and OMB Circulars A–21 and A–122" are deleted and replaced by "program regulations may" and "subpart and its Appendices" to reflect that DOE is choosing to limit the waivers of prior approvals to those contained in program regulations or in this implementation of Circular A–110 and not extending it to waive prior approval requirements contained in the cost principal Circulars A–21 and A–122.

In § 600.125(f) on rebudgeting, "The Federal awarding agency may, at its option" is deleted and replaced by "Program regulations may" to reflect that DOE is choosing to allow unrestricted rebudgeting by a recipient (provided the uses are consistent with the original appropriation) unless program regulations provide otherwise.

In § 600.125(i) regarding imposing other prior approval requirements, "unless a deviation has been approved by OMB" is deleted and replaced by "Except in accordance with the deviation procedures in § 600.4 or as may be provided for in program regulations" and "by the DOE" to reflect that there may be program regulations that need to be considered in understanding what prior approval requirements may exist for a particular financial assistance program. Additionally, "may" has been changed to "will" to more emphatically state what DOE policy is.

In § 600.125(l) on budget request formats, the entire text is deleted and replaced by "Requests for budget revisions may be made by letter" to reflect DOE policy that the use of budget forms are not required (although, of course, they may be used) for requesting budget revisions.

In § 600.126 (c) and (d) on Non-Federal audits, the entire text is deleted and replaced with the language shown to reflect DOE policy that the Contracting Officer has wide discretion in determining the nature of the audits needed for hospitals not covered by A–133 and commercial organizations. In addition, subparagraph (e) is added to address audits of individuals who are financial assistance recipients.

In § 600.130 Property Standards, "or program regulations" is added to reflect that there may be program regulations that need to be considered in understanding property management requirements.

In § 600.132 Real property (introductory paragraph), the entire text is deleted and replaced with the language shown to reflect that the provisions of this section address real property use and disposition.

In § 600.133(b) Exempt property, the text has been deleted and replaced with the language shown to reflect that, with regard to exempt property, DOE shall retain the right to issue disposition instructions within 120 days of receipt of a request for disposition of unneeded equipment or receipt of final inventory. If DOE fails to issue such instructions within that time period, title to equipment vests in the recipient without further obligation to the Federal Government.

In § 600.136(c) pertaining to intangible property, "Unless waived by the Federal awarding agency, the Federal Government" has been deleted and replaced with "DOE" to reflect the DOE policy that DOE retains the indicated rights in data.

In § 600.137 Property trust relationship, "Agencies may require" has been deleted and replaced with "shall" to reflect that liens will be recorded on personal or real property acquired or improved with Federal funds.

In § 600.152(a)(2)(ii) regarding Financial reports, "Federal awarding agencies may require" has been deleted and replaced with "Recipients shall" to reflect that recipients will forecast cash requirements on the SF–272.

In § 600.153 regarding record retention and access, "unless such requirements are established in program regulations" has been added to reflect that there may be program regulations that need to be considered in understanding record retention and access requirements.

C. Cross-References

Those portions of this rulemaking that have added cross-references to the text of A–110 are as follows:

In §§ 600.101 Definitions (under the definition of "Suspension"), 600.113 Debarment and Suspension, 600.144(d) Procurement Procedures, and 600.162(d) Enforcement, a reference to

10 CFR Part 1036, DOE's implementation of the non-procurement debarment and suspension executive orders, has been added.

The text of § 600.103 Deviations has been deleted and a cross-reference to DOE's deviation provisions in § 600.4 has been added. The deleted text entails directions to Federal agencies about the degree to which OMB will permit deviations from the provisions of the Circular. These provisions are binding upon Federal agencies by virtue of their inclusion in Circular A–110 and do not need to be provided for in agency implementing regulations. DOE deviation provisions in § 600.4 make reference to the fact that OMB approval may be needed for certain types of deviations. Additional cross-references to the deviation provisions of § 600.4 are in §§ 600.125(d) and (i) on Budget and project reviews, and § 600.140 Procurement standards.

In § 600.121(b) on Financial Management Standards, references to § 600.121(f) and § 600.181 are added to identify exceptions to the financial management provisions of this subparagraph.

Section 600.149 has been added to cross-reference the Resource Conservation and Recovery Act provisions in § 600.116.

D. Provisions From the Current Financial Assistance Rules

In this rulemaking implementing OMB Circular A–110, the basic approach is to replace the current text of Subpart B of 10 CFR part 600 with the appropriately modified text of Circular A–110. However, certain portions of Subpart B have been retained and integrated into the A–110 language. They are as follows:

In § 600.112 on application forms, subparagraphs (a), (b) and (c) are deleted and replaced with the provisions which are carried over from 10 CFR 600.102. These sections are being added to provide detailed application and budgetary forms information to recipients. Subparagraph (d) has been slightly reworded and included under § 600.112(a) of this rulemaking.

Section 600.114(b) regarding special restrictive conditions is carried over from 10 CFR 600.105(c) and concerns the issue of a recipient placing special restrictive conditions on subawards, which is not addressed in Circular A–110.

Section 600.121(f) on financial management system requirements is carried over from § 600.109 and concerns the issue of the financial management system required for individual recipients of awards, which is not addressed in Circular A–110.

The language at the end of § 600.122(h)(2) on Payments beginning with "Before withholding any payment" is carried over from § 600.112(g)(3) and provides 30 days notice, and an opportunity to cure the noncompliance or indebtedness within that time period, before withholding of payment occurs. Such a provision is not addressed in Circular A–110.

Sections 600.123(j), (k), and (l) cost-sharing provisions are carried over from §§ 600.107(a), (b), and (c). The provisions of §§ 600.123(j) and (k) are continued because of the concern that the requirements for cost sharing be specifically stated (so that all applicants clearly understand the provisions they are operating under) and justified (so that any required cost sharing is really a program need). Section 600.123(l) is continued to address program income, patent rights, rights in data and foregone fees in the context of cost sharing, provisions which are not included in Circular A–110.

The language at the end of § 600.125(e)(4) on pre-award costs, beginning with "For continuation awards," is carried over from § 600.103(g)(2)(ii). This language permits costs incurred more than 90 days before the beginning of a continuation award to be charged to that continuation year, without the need to receive prior approval from DOE, should the award be made. As always, pre-award costs are incurred at the recipient's risk that the award may not be made. This is, in effect, a waiver of Section _____.25(e)(1) of OMB Circular A–110, and is a permitted agency option under Section _____.25(e) of the Circular.

Sections 600.125(n) and (o) pertaining to budget and project changes are carried over from §§ 600.114(e)(3), (4), and (5). These provisions provide more procedural detail for DOE recipients in dealing with budget and project revisions than is included in Circular A–110.

Sections 600.127(b) and (c) allowable cost provisions are carried over from §§ 600.103(f) and (h). Section 600.127(b) provides more detail about DOE evaluation of indirect cost requests than is provided in Circular A–110. Section 600.127(h) states the DOE policy of opposition to paying fees or profits on financial assistance awards with the exception of Small Business Innovation Research Awards. This subject is not addressed directly in Circular A–110, although the second Response under the Comments and Responses in the preamble to the Circular states: "Generally fees and profits are not paid to recipients unless authorized by legislation."

Section 600.144(f) under Procurement procedures is carried over from § 600.119(e) and addresses payments of interest penalties on dealings between recipients and subrecipients, a subject not addressed in OMB Circular A–110.

The final paragraph of Section 151(d) on program reporting is a combination of provisions carried over from §§ 600.115(b)(3) and (f). This language lists specific performance reporting forms that DOE has developed, has received OMB clearance to use and may use as the Contracting Officer sees fit.

Section 600.151(i) on program reporting is carried over from § 600.115(i) and states provisions regarding performance reporting requirements on subawards not addressed in OMB Circular A–110.

Section 600.153(h) on record retention requirements is carried over from § 600.124(c) and states provisions regarding record retention for program income which was not addressed in OMB Circular A–110.

The segment of the subpart titled "Additional Provisions" was added as a location for rules for types of recipients not otherwise covered in this subpart. The provisions of § 600.181 are carried over from § 600.125.

E. Miscellaneous Changes

Further miscellaneous changes of this regulatory implementation of A–110 from the text of Circular A–110 as published that have not been included above are as follows:

In § 600.104 Subawards, the sentence beginning "Thus, this subpart is" was added to clarify the applicability of these provisions to subrecipients. It does not change the policy of the Circular.

In § 600.111(b) pertaining to public notice requirements, "shall" is changed to "will, whenever practical," because of the possibility that awards may need to be made without sufficient lead time to provide the notification.

The last sentence of § 600.121(a) regarding financial requirements for research awards has been added for emphasis.

The last sentence of § 600.121(b)(4) reiterates § 600.121(a).

In § 600.122(f) on payment, "awardee's" was changed to "recipient's" to be consistent with DOE usage.

The phrase "as defined in OMB Circular A–129, "Managing Federal Credit Programs" " in § 600.122(h)(2) is deleted as an unnecessary cross-reference that may also restrict the

applicability of this provision unnecessarily.

Section 600.123(a) under Cost sharing or matching has been rewritten to improve the syntax.

In § 600.123(f) under Cost sharing or matching, "expendable equipment" has been deleted because it is an example that does not fit the subject of the paragraph.

Section 600.124(a) under Program income has been rewritten to improve the syntax.

In § 600.124(b)(1), (2) and (3), "program" has been deleted to reflect that DOE is limiting the use of program income to the project on which it is earned, not more generally to undefined programs.

Section 600.124(d) has been rewritten to improve the syntax and to add the applicability to commercial organizations.

Section 600.125(a) on budget plans has been rewritten to improve the syntax.

Section 600.125(e)(2) on budget period extensions has been rewritten to improve the syntax.

In §§ 600.128, 600.151(b), and 600.161(a)(3), "grant" was changed to "award" to be consistent with DOE usage.

In § 600.134(c) under Equipment, "Federal awarding agency which funded the original project" has been deleted and replaced with "DOE." The word "awarding" between "Federal" and "agencies" has been deleted as unnecessary.

In § 600.134(g) under Equipment, the following has been added: "Equipment with a current per-unit fair market value of less than $5000 may be retained, sold or otherwise disposed of with no further obligation to the awarding agency." This makes explicit what is intended but not directly stated in Circular A–110. This policy, it should be noted, is consistent with Section _____.32(e)(1) of the A–102 Common Rule.

Section 600.134(h) under Equipment and its subparagraphs have been renumbered from Circular A–110, in which it was listed as Section _____.34(g)(4). Subparagraph (g)(4) was a different subject from the rest of the paragraph (g). Also, the language "the recipient shall apply the standards of this section, as appropriate" was deleted and replaced by "the provisions of 600.134(g)(1) apply" to give a more precise cross-reference to the applicable standards.

In § 600.144(a)(2) under Procurement procedures, "for the Federal Government" is deleted as an inappropriate standard for financial assistance.

In § 600.151(h) pertaining to performance reports, "applicable" was added to emphasize that not all provisions of 5 CFR Part 1320 apply in requesting performance data.

Section 600.152(a)(1)(i) under Financial reporting has been rewritten to improve syntax.

In § 600.153(b)(4) pertaining to record retention requirements, "etc. as" is deleted and replaced by "and related records, for which retention requirements are" to provide more specific examples.

In § 600.153(g) pertaining to record retention requirements, the first sentence in the A–110 text was deleted because it had the appearance of a subparagraph title, which the rest of the subparagraphs did not have.

In § 600.153(g) (1) and (2), "awarding" was deleted and replaced by "responsible for negotiating the recipient's indirect cost rate" in (g)(1) and "cognizant" in (g)(2) to emphasize the role of cognizant agencies in indirect cost rate negotiation.

Appendix A, No. 8 has been rewritten to more accurately state the circumstances under which Executive Orders 12549 and 12689 apply.

III. Explanation for "Interim Final" Rulemaking

As the foregoing preamble discussion indicates, the vast majority of the provisions of the interim final rule issued today follow the provisions of revised OMB Circular A–110.

For the reasons that follow, DOE has determined that none of the provisions of the interim final rule need to be proposed for public comment. The final version of revised OMB Circular A–110 resulted from a lengthy public comment process involving all of the Executive agencies including DOE. In 1987, an interagency task force recommended that OMB Circular A–110, "Uniform Administrative Requirements for Grants and Agreements With Institutions of Higher Education, Hospitals and Other Non-Profit Organizations" be combined with OMB Circular A–102, "Uniform Requirements for Grants and Agreements with State and Local Governments," as a consolidated "common rule." In November, 1988, a proposed consolidated "common rule" was published by OMB in the **Federal Register**, 53 FR 44716. That proposal elicited a substantial number of adverse comments. Subsequently, in August 1992, a revised proposal, developed by another interagency task force which also included DOE, was published for public comment. 57 FR 39018. The revised proposal drew over 200 comments from a wide variety of sources.

All relevant comments were considered in the final revision of OMB Circular A–110 when it was issued for government-wide use on November 29, 1993, 58 FR 62992. The revised circular states that Federal agencies responsible for awarding and administering grants and other agreements to recipients described therein shall adopt the language in the circular unless other provisions are required by Federal statute or exceptions or deviations are approved by OMB.

As noted above, OMB Circular A–110 identifies certain areas where agencies have options, but the available options are explicitly limited. These areas are discussed in section I.B. of this Preamble under Supplementary Information. For the most part, the provisions of the interim final rule discussed in that preamble section represent a continuation or a technical clarification of existing policy under 10 CFR part 600. To the extent that there are changes in existing policy, they are either the choice of the most permissive available option under OMB Circular A–110 (e.g., § 600.123(b) permitting unrecovered indirect costs to be included in cost sharing) or a purely procedural change (e.g., § 600.125 limiting prior approval requirements for revisions of budget and program plans.)

Given the extensive public comment process on the OMB circular, DOE's participation in the resolution of comments, and the lack of discretion to change the policies in the circular, DOE concluded that a notice of proposed rulemaking for its implementing rules would be unnecessary, impracticable, and contrary to public policy.

There is no obligation to issue a proposed rule with respect to those provisions of today's regulations that are procedural, interpretative, or non-substantive clarifications.

With respect to the provisions of today's rule that exercise the options that are allowable under OMB Circular A–110, DOE has reached a similar conclusion because those substantive policies represent the most permissive option permitted under the circular.

Finally, to the extent that existing policies are being continued, DOE also relies on its discretion to reissue existing regulations, with minor technical editing, without proposing them for public comment.

IV. Review Under Executive Order 12612

Executive Order 12612 requires that regulations, rules, legislation, and any other policy actions be reviewed for any

substantial direct effects on States, on the relationship between the Federal Government and the States, or in the distribution of power and responsibilities among various levels of Government. If there are sufficient substantial direct effects, then the Executive Order requires preparation of a federalism assessment to be used in all decisions involved in promulgating and implementing a policy action. Today's interim final rule will revise certain policy and procedural requirements. However, DOE has determined that this rulemaking will not have a substantial direct effect on the institutional interests or traditional functions of States.

V. Regulatory Review

Today's regulatory action has been determined not to be a "significant regulatory action" under Executive Order 12866, "Regulatory Planning and Review," (58 FR 51735, October 4, 1993). Accordingly, today's action was not subject to review under the Executive Order by the Office of Information and Regulatory Affairs.

VI. Review Under the Regulatory Flexibility Act

This interim final rule was reviewed under the Regulatory Flexibility Act of 1980, Pub. L. 96–354, 94 Stat. 1164, which requires preparation of a regulatory flexibility analysis for any regulation that will have a significant economic impact on a substantial number of small entities; i.e., small businesses, small organizations, and small governmental jurisdictions. DOE has concluded that the interim final rule would only affect small entities as they apply for and receive financial assistance, and does not create additional economic impact on small entities as a whole. DOE certifies that this interim final rule will not have a significant economic impact on a substantial number of small entities and, therefore, no regulatory flexibility analysis has been prepared.

VII. Review Under the Paperwork Reduction Act

No information collection or recordkeeping requirements are imposed upon the public by this interim final rulemaking. Accordingly, no OMB clearance is required under the Paperwork Reduction Act of 1980, 44 USC 3501, et seq., or OMB implementing regulations at 5 CFR Part 1320.

VIII. Review Under the National Environmental Policy Act

DOE has concluded that this rule falls into a class of actions (categorical exclusion A5) that are categorically excluded from NEPA review because they would not individually or cumulatively have significant impact on the human environment, as determined by the Department's regulations (10 CFR Part 1021, Subpart D) implementing the National Environmental Policy Act of 1969 (42 U.S.C. 4321, 4331–4335, 4341–4347 (1976)). Therefore, this rule does not require an environmental impact statement or an environmental assessment pursuant to NEPA.

IX. Review Under Executive Order 12778

Section 2 of Executive Order 12778 instructs each agency to adhere to certain requirements in promulgating new regulations and reviewing existing regulations. These requirements, set forth in sections 2(a) and (b)(2), include eliminating drafting errors and needless ambiguity, drafting the regulations to minimize litigation, providing clear and certain legal standards for affected conduct, and promoting simplification and burden reduction. Agencies are also instructed to make every reasonable effort to ensure that the regulation specifies clearly any preemptive effect, effect on existing Federal law or regulation, and retroactive effect; describes any administrative proceedings to be available prior to judicial review and any provisions for the exhaustion of such administrative proceedings; and defines key terms. DOE certifies that today's interim final rule meets the requirements of sections 2 (a) and (b) of Executive Order 12778.

X. Public Comments

Interested persons are invited to participate in this rulemaking by submitting data, views, or arguments with respect to the changes set forth in this notice. Three copies of written comments should be submitted to the address indicated in the **ADDRESSES** section of this notice. All comments received will be available for public inspection in the DOE Reading Room, Room 1E–190, Forrestal Building, 1000 Independence Avenue, SW., Washington, D.C. 20585, between the hours of 9 a.m. and 4 p.m., Monday through Friday, except Federal holidays. All written comments received by the date given in the **DATES** section will be fully considered. Any information considered to be confidential must be so identified and submitted in writing, one copy only. The DOE reserves the right to determine the confidential status of the information and to treat it according to our determination.

The Department has concluded that this interim final rule does not involve a substantial issue of fact or law and that the interim final rule should not have substantial impact on the nation's economy or a large number of individuals or businesses. Therefore, pursuant to Pub. L. 95–91, the DOE Organization Act, and the Administrative Procedure Act (5 U.S.C. 553), the Department does not plan to hold a public hearing on this interim final rule.

List of Subjects in 10 CFR Part 600

Accounting; Administrative practice and procedure; Government contracts; Grant programs; Indians; Intergovernmental relations; Loan programs; Lobbying; Penalties; Reporting and recordkeeping requirements.

Issued in Washington, DC., October 13, 1994.

Richard H. Hopf,

Deputy Assistant Secretary for Procurement and Assistance Management.

For the reasons set out in the preamble, Part 600 of Chapter II, Title 10 of the Code of Federal Regulations is amended as follows:

PART 600—FINANCIAL ASSISTANCE RULES

1. The authority citation for Part 600 continues to read as follows:

Authority: Secs. 644 and 646, Pub. L. 95–91, 91 Stat. 599 (42 U.S.C. 7254 and 7256); Pub. L. 97–258, 96 Stat. 1003–1005 (31 U.S.C. 6301–6308), unless otherwise noted.

Subparts C, D, and E [Redesignated as Subparts D, E, and C]

2. Subparts C, D, and E are redesignated as Subparts D, E, and C respectively, the sections are redesignated, and the section headings are revised as follows:

Subpart C—Uniform Administrative Requirements for Grants and Cooperative Agreements to State and Local Governments

New Section (Subpart C) and Old Section (Subpart E)

General

600.200 [600.400] Purpose and scope of this subpart.
600.201 [600.401] Scope of Sections 600.200 through 600.205.
600.202 [600.402] Definitions.
600.203 [600.403] Applicability.
600.204 [600.404] Effect on other issuances.

600.205 [600.405] Additions and Exceptions.

Pre-Award Requirements

600.210 [600.410] Forms for applying for grants.
600.211 [600.411] State plans.
600.212 [600.412] Special grant or subgrant conditions for "high risk" recipients.

Post-Award Requirements

Financial Administration

600.220 [600.420] Standards for financial management systems.
600.221 [600.421] Payment.
600.222 [600.422] Allowable costs.
600.223 [600.423] Period of availability of funds.
600.224 [600.424] Matching or Cost sharing.
600.225 [600.425] Program income.
600.226 [600.426] Non-Federal audit.

Changes, Property, and Subawards

600.230 [600.430] Changes.
600.231 [600.431] Real property.
600.232 [600.432] Equipment.
600.233 [600.433] Supplies.
600.234 [600.434] Copyrights.
600.235 [600.435] Subawards to debarred and suspended parties.
600.236 [600.436] Procurement.
600.237 [600.437] Subgrants.

Reports, Records Retention, and Enforcement

600.240 [600.440] Monitoring and reporting program performance.
600.241 [600.441] Financial reporting.
600.242 [600.442] Retention and access requirements for records.
600.243 [600.443] Enforcement.
600.244 [600.444] Termination for convenience.

After-the-Grant Requirements

600.250 [600.450] Closeout.
600.251 [600.451] Later disallowances and adjustments.
600.252 [600.452] Collection of amounts due.

Entitlements [Reserved]

Subpart D—Cooperative Agreements

New Section (Subpart D) and Old Section (Subpart C)

600.300 [600.200] Scope and applicability.
600.301 [600.201] Definitions.
600.302 [600.202] Selection of cooperative agreement as financial assistance instrument.
600.303 [600.203] Application budgetary information.
600.304 [600.204] Instrument conversion.
600.305 [600.205] Application, funding, and administrative requirements.
600.306 [600.206] Cost sharing.
600.307 [600.207] Patents, data, and copyrights.

Subpart E—Audits of State and Local Governments

New Section (Subpart E) and Old Section (Subpart D)

600.400 [600.300] Scope and applicability.
600.401 [600.301] Definitions.
600.402 [600.302] Policy.
600.403 [600.303] Scope of audit.
600.404 [600.304] Frequency of audit.
600.405 [600.305] Internal control and compliance reviews.
600.406 [600.306] Subrecipients.
600.407 [600.307] Relation to other audit requirements.
600.408 [600.308] Cognizant agency responsibilities.
600.409 [600.309] Illegal acts or irregularities.
600.410 [600.310] Audit reports.
600.411 [600.311] Audit resolution.
600.412 [600.312] Audit workpapers and reports.
600.413 [600.313] Audit costs.
600.414 [600.314] Sanctions.
600.415 [600.315] Auditor selection.
600.416 [600.316] Small and minority audit firms.
600.417 [600.317] Reporting.

Part 600 is further amended as set forth below:

§ 600.2 [Amended]

5. Section 600.2(g)(1)(i) is amended by adding to the **Federal Register** citation in parentheses "as amended by 58 FR 62992, Nov. 29, 1993" before the closing parenthesis and § 600.2(g)(1)(ii) is amended by adding to the **Federal Register** citation in parentheses "and 58 FR 58393, July 26, 1993" before the closing parenthesis.

§ 600.4 [Amended]

6. Section 600.4 is amended as follows:

A. In paragraph (a)(1)(second sentence) revise "§§ 600.105 and 600.412" to read "§§ 600.114 and 600.212"; and

B. In paragraphs (c)(2)(i)(second sentence) and (c)(3)(second sentence) revise "§ 600.207" to read "§ 600.307".

§ 600.5 [Amended]

7. Section 600.5(first sentence) is amended by adding "(as codified at 31 U.S.C. 6301–6306)" after "Public Law 95–224".

§ 600.7 [Amended]

8. Section 600.7(b)(2)(first sentence, parenthetical phrase) is amended by revising "§ 600.106(b)" to read "§ 600.31(b)".

§ 600.9 [Amended]

9. Section 600.9(c)(19)(second sentence, parenthetical phrase) is amended by revising "§ 600.1093" to read "§ 600.127".

§ 600.10 [Amended]

10. Section 600.10(e)(3)(parenthetical phrase) is amended by revising "§§ 600.31, 600.102, and 600.203" to read "§§ 600.31, 600.112, and 600.303".

§ 600.14 [Amended]

11. Section 600.14(c) is amended by removing "(PR–132)" and revising "Procurement, Assistance and Program Management" to read "Procurement and Assistance Management".

§ 600.15 [Amended]

12. Section 600.15(b)(4) is amended by removing "(MA–942)" and revising "Procurement and Assistance Management Directorate" to read "Office of Procurement and Assistance Management".

§ 600.20 [Amended]

13. Section 600.20(c)(first sentence) is amended by revising "§ 600.103(g), § 600.32 or § 600.442(b)" to read "§ 600.32, § 600.125(e) or § 600.230."

§ 600.25 [Amended]

14. Section 600.25(d)(second sentence) is amended by revising "§ 600.124 and § 600.442" to read "§§ 600.153 and 600.242".

§ 600.26 [Amended]

15. Section 600.26 is amended as follows:

A. In paragraph (d)(1)(i), revise "§ 600.105 or § 600.412" to read "§ 600.114 or § 600.212".

B. In paragraph (d)(1)(ii), revise "§ 600.406" to read "§ 600.206".

C. In paragraph (d)(1)(iii), revise "§§ 600.103, 600.114, 600.422, or 600.430" to read "§§ 600.125, 600.127, 600.222, or 600.230".

D. In paragraph (d)(1)(iv), revise "§§ 600.121(b) (1), (2), (3) or (5); or § 600.443 (a)(1), (a)(3) for suspensions only; or § 600.443(a)(4)" to read "§§ 600.122(n); § 600.162(a) (1), (3) for suspensions only, (4); or § 600.243 (a)(1), (a)(3) for suspensions only; or § 600.243 (a)(4)".

E. In paragraph (d)(1)(v), revise "§ 600.112(g), § 600.119, or § 600.436" to read "§ 600.122(h), §§ 600.140 through 600.149, § 600.221(g) or § 600.236".

§ 600.28 [Amended]

16. Section 600.28 is amended as follows:

A. In paragraph (a)(3), revise "§ 600.121(b) or § 600.443(a)" to read "§ 600.122(n), § 600.162(a), or § 600.243(a)".

B. In paragraph (b) (introductory paragraph), revise "§ 600.121(b) or § 600.443(a)" to read "§ 600.122(n), § 600.162(a), or § 600.243(a)".

§ 600.29 [Amended]

17. Section 600.29 is amended as follows:

A. In paragraph (a)(1), revise "§ 600.121 or § 600.28" to read "§ 600.28, § 600.122(n), § 600.162(a) or § 600.243(a)".

B. In paragraph (b) (introductory paragraph), revise "§ 600.121(c) or § 600.28" to read "§ 600.28, § 600.162(a) or § 600.243(a)" and revise "§ 600.121(a) or § 600.28(a)" to read "§ 600.28(a), § 600.162(a) or § 600.243(a)".

C. In paragraph (b)(5), revise "§ 600.123" to read "§§ 600.170 through 600.173 and §§ 600.250 through 600.252".

D. In paragraph (d), revise "§ 600.121 or § 600.28" to read "§ 600.28, §§ 600.160 through 600.162 or §§ 600.243 through 600.244".

E. In paragraph (f), revise "§ 600.121 or § 600.28" to read "§ 600.28, §§ 600.160 through 600.162 or §§ 600.243 through 600.244".

§ 600.31 [Amended]

18. Section 600.31 is amended as follows:

A. In paragraph (b) (introductory text, parenthetical phrase), revise "§ 600.102(c)" to read "§ 600.112(c) and § 600.210(b)".

B. In paragraph (b)(1), remove the parenthetical phrase "(see § 600.115(d)(1))".

C. In paragraph (d)(1), revise "§ 600.125(d)" to read "§ 600.181(d)".

D. In paragraph (f)(4), revise "SBIR award (see § 600.125(c))" to read "SBIR awards (see § 600.181(c))".

§ 600.32 [Amended]

19. Section 600.32(c)(1) (parenthetical phrase) is amended by revising "(See § 600.116)" to read "(See § 600.152 and § 600.241)".

§ 600.33 [Amended]

20. Section 600.33(b)(2) is amended, in clause paragraph (e)(2) of PATENT RIGHTS (SHORT FORM), by revising "§ 600.118(b)(1)" to read "§ 600.33(b)(1)".

§ 600.200 [Amended]

21. Section 600.200(c) is amended in the first sentence by revising "§ 600.121" to read "§ 600.162 and § 600.243," revising in the second sentence "§ 600.123" to read "§§ 600.170 through 600.173 and §§ 600.250 through 600.252," and revising in the first and second sentences "§ 600.205" to read "§ 600.305".

§ 600.202 [Amended]

22. Section 600.202(b)(1)(iii) is amended by revising "§ 600.122 does" to read "§§ 600.160 through 600.162 and §§ 600.243 and 600.244 do".

§ 600.203 [Amended]

23. Section 600.203 is amended by revising "§ 600.102" to read "§ 600.112" in all occurrences.

§ 600.205 [Amended]

24. In the first sentence, "Subpart E" is revised to read "Subpart C".

§ 600.206 [Amended]

25. Section 600.206 is amended as follows:

A. In the introductory text, revise "§ 600.107 or § 600.424" to read "§ 600.123 or § 600.224".

B. In paragraph (c), revise "§ 600.107(c) or § 600.424" to read "§ 600.123 or § 600.224".

§ 600.207 [Amended]

26. § 600.207(b)(1) is amended by revising "§ 600.118(b)(1)" to read "§ 600.33(b)(1)" in the first and second sentences and revising "§ 600.118" to read "§ 600.33" in the third sentence.

§ 600.302 [Amended]

27. Section 600.302(d) is amended by revising "§§ 600.25, 600.124, and 600.271" to read "§§ 600.25, 600.153, 600.242, and 600.305".

§ 600.303 [Amended]

28. Section 600.303(c)(second sentence) is amended by revising "§§ 600.120(c) and 600.271" to read "§§ 600.126, 600.226, and 600.305".

§ 600.306 [Amended]

29. Sections 600.306(a) and (b) are amended by revising "§ 600.120(c)" to read "§ 600.126(a)".

§ 600.314 [Amended]

30. Section 600.314(b)(introductory paragraph) is amended by revising "§ 600.121" to read "§§ 600.162 and 600.243".

§ 600.441 [Amended]

31. Section 600.441(e)(2)(i)(second sentence) is amended by revising "§ 600.41(b)(3) and (4)" to read "§ 600.241(b)(3) and (4)".

32. Subpart B of Part 600 is revised to read as set forth below:

Subpart B—Uniform Administrative Requirements for Grants and Cooperative Agreements With Institutions of Higher Education, Hospitals, Other Non-Profit Organizations and Commercial Organizations

General

Secs.
600.100 Purpose.
600.101 Definitions.
600.102 Effect on other issuances.
600.103 Deviations.
600.104 Subawards.

Pre-Award Requirements

600.110 Purpose.
600.111 Pre-award policies.
600.112 Forms for applying for Federal assistance.
600.113 Debarment and suspension.
600.114 Special award conditions.
600.115 Metric system of measurement.
600.116 Resource Conservation and Recovery Act.
600.117 Certifications and representations.

Post-Award Requirements

Financial and Program Management

600.120 Purpose of financial and program management.
600.121 Standards for financial management systems.
600.122 Payment.
600.123 Cost sharing or matching.
600.124 Program income.
600.125 Revision of budget and program plans.
600.126 Non-Federal audits.
600.127 Allowable costs.
600.128 Period of availability of funds.

Property Standards

600.130 Purpose of property standards.
600.131 Insurance coverage.
600.132 Real property.
600.133 Federally-owned and exempt property.
600.134 Equipment.
600.135 Supplies and other expendable property.
600.136 Intangible property.
600.137 Property trust relationship.

Procurement Standards

600.140 Purpose of procurement standards.
600.141 Recipient responsibilities.
600.142 Codes of conduct.
600.143 Competition.
600.144 Procurement procedures.
600.145 Cost and price analysis.
600.146 Procurement records.
600.147 Contract administration.
600.148 Contract provisions.
600.149 Resource Conservation and Recovery Act (RCRA)

Reports and Records

600.150 Purpose of reports and records.
600.151 Monitoring and reporting program performance.
600.152 Financial reporting.
600.153 Retention and access requirements for records.

Termination and Enforcement

600.160 Purpose of termination and enforcement.
600.161 Termination.
600.162 Enforcement.

After-the-Award Requirements

600.170 Purpose.
600.171 Closeout procedures.
600.172 Subsequent adjustments and continuing responsibilities.
600.173 Collection of amounts due.

Additional Provisions

600.180 Purpose.

600.181 Special provisions for Small Business Innovation Research Grants.

Appendix A to Subpart B of Part 600—Contract Provisions

Subpart B—Uniform Administrative Requirements for Grants and Cooperative Agreements With Institutions of Higher Education, Hospitals, Other Non-Profit Organizations and Commercial Organizations.

General

§ 600.100 Purpose.

This Subpart implements OMB Circular A–110 and establishes uniform administrative requirements for grants and agreements awarded to institutions of higher education, hospitals, and other non-profit and commercial organizations. It also establishes rules governing subawards to institutions of higher education, hospitals, and non-profit and commercial organizations (including grants and cooperative agreements administered by State, local and Indian Tribal governments).

600.101 Definitions.

Accrued expenditures means the charges incurred by the recipient during a given period requiring the provision of funds for:

(1) Goods and other tangible property received;

(2) Services performed by employees, contractors, subrecipients, and other payees; and,

(3) Other amounts becoming owed under programs for which no current services or performance is required.

Accrued income means the sum of:

(1) Earnings during a given period from services performed by the recipient, and goods and other tangible property delivered to purchasers, and

(2) Amounts becoming owed to the recipient for which no current services or performance is required by the recipient.

Acquisition cost of equipment means the net invoice price of the equipment, including the cost of modifications, attachments, accessories, or auxiliary apparatus necessary to make the property usable for the purpose for which it was acquired. Other charges, such as the cost of installation, transportation, taxes, duty or protective in-transit insurance, shall be included or excluded from the unit acquisition cost in accordance with the recipient's regular accounting practices.

Advance means a payment made by Treasury check or other appropriate payment mechanism to a recipient upon its request either before outlays are made by the recipient or through the use of predetermined payment schedules.

Award means financial assistance that provides support or stimulation to accomplish a public purpose. Awards include grants and other agreements in the form of money or property in lieu of money, by DOE to an eligible recipient. The term does not include: technical assistance, which provides services instead of money; other assistance in the form of loans, loan guarantees, interest subsidies, or insurance; direct payments of any kind to individuals; and, contracts which are required to be entered into and administered under procurement laws and regulations.

Cash contributions means the recipient's cash outlay, including the outlay of money contributed to the recipient by third parties.

Closeout means the process by which DOE determines that all applicable administrative actions and all required work of the award have been completed by the recipient and DOE.

Contract means a procurement contract under an award or subaward, and a procurement subcontract under a recipient's or subrecipient's contract.

Cost sharing or matching means that portion of project or program costs not borne by DOE.

Date of completion means the date on which all work under an award is completed or the date on the award document, or any supplement or amendment thereto, on which DOE sponsorship ends.

Disallowed costs means those charges to an award that the DOE determines to be unallowable, in accordance with the applicable Federal cost principles or other terms and conditions contained in the award.

Equipment means tangible nonexpendable personal property including exempt property charged directly to the award having a useful life of more than one year and an acquisition cost of $5000 or more per unit. However, consistent with recipient policy, lower limits may be established.

Excess property means property under the control of any Federal awarding agency that, as determined by the head thereof, is no longer required for its needs or the discharge of its responsibilities.

Exempt property means tangible personal property acquired in whole or in part with Federal funds, where the Federal awarding agency has statutory authority to vest title in the recipient without further obligation to the Federal Government. An example of exempt property authority is contained in the Federal Grant and Cooperative Agreement Act (31 U.S.C. 6306), for property acquired under an award to conduct basic or applied research by a non-profit institution of higher education or non-profit organization whose principal purpose is conducting scientific research.

Federal awarding agency means the Federal agency that provides an award to the recipient.

Federal funds authorized means the total amount of Federal funds obligated by the Federal Government for use by the recipient. This amount may include any authorized carryover of unobligated funds from prior funding periods when permitted by agency regulations or agency implementing instructions.

Federal share of real property, equipment, or supplies means that percentage of the property's acquisition costs and any improvement expenditures paid with Federal funds.

Funding period or budget period means the period of time when DOE funding is available for obligation by the recipient.

Intangible property and debt instruments means, but is not limited to, trademarks, copyrights, patents and patent applications and such property as loans, notes and other debt instruments, lease agreements, stock and other instruments of property ownership, whether considered tangible or intangible.

Obligations means the amounts of orders placed, contracts and grants awarded, services received and similar transactions during a given period that require payment by the recipient during the same or a future period.

Outlays or expenditures means charges made to the project or program. They may be reported on a cash or accrual basis. For reports prepared on a cash basis, outlays are the sum of cash disbursements for direct charges for goods and services, the amount of indirect expense charged, the value of third party in-kind contributions applied and the amount of cash advances and payments made to subrecipients. For reports prepared on an accrual basis, outlays are the sum of cash disbursements for direct charges for goods and services, the amount of indirect expense incurred, the value of in-kind contributions applied, and the net increase (or decrease) in the amounts owed by the recipient for goods and other property received, for services performed by employees, contractors, subrecipients and other payees and other amounts becoming owed under programs for which no current services or performance are required.

Personal property means property of any kind except real property. It may be tangible, having physical existence, or intangible, having no physical existence, such as copyrights, patents, or securities.

Prior approval means written approval by a contracting officer evidencing prior consent.

Program income means gross income earned by the recipient that is directly generated by a supported activity or earned as a result of the award (see exclusions in §§ 600.124 (e) and (h)). Program income includes, but is not limited to, income from fees for services performed, the use or rental of real or personal property acquired under federally-funded projects, the sale of commodities or items fabricated under an award, license fees and royalties on patents and copyrights, and interest on loans made with award funds. Interest earned on advances of DOE funds is not program income. Except as otherwise provided in this Subpart, program regulations, or the terms and conditions of the award, program income does not include the receipt of principal on loans, rebates, credits, discounts, etc., or interest earned on any of them.

Project costs means all allowable costs, as set forth in the applicable Federal cost principles, incurred by a recipient and the value of the contributions made by third parties in accomplishing the objectives of the award during the project period.

Project period means the period established in the award document during which DOE sponsorship begins and ends.

Property means, unless otherwise stated, real property, equipment, intangible property and debt instruments.

Real property means land, including land improvements, structures and appurtenances thereto, but excludes movable machinery and equipment.

Recipient means an organization receiving financial assistance directly from DOE to carry out a project or program. The term includes public and private institutions of higher education, public and private hospitals, and other quasi-public and private non-profit organizations such as, but not limited to, community action agencies, research institutes, educational associations, and health centers. The term shall include commercial organizations which are recipients, subrecipients, or contractors or subcontractors of recipients or subrecipients. The term does not include government-owned contractor-operated facilities or research centers providing continued support for mission-oriented, large-scale programs that are government-owned or controlled, or are designated as federally-funded research and development centers.

Research and development means all research activities, both basic and applied, and all development activities that are supported at universities, colleges, and other non-profit institutions. "Research" is defined as a systematic study directed toward fuller scientific knowledge or understanding of the subject studied. "Development" is the systematic use of knowledge and understanding gained from research directed toward the production of useful materials, devices, systems, or methods, including design and development of prototypes and processes. The term research also includes activities involving the training of individuals in research techniques where such activities utilize the same facilities as other research and development activities and where such activities are not included in the instruction function.

Small award means a grant or cooperative agreement not exceeding the small purchase threshold fixed at 41 U.S.C. 403(11) (currently $25,000).

Subaward means an award of financial assistance in the form of money, or property in lieu of money, made under an award by a recipient to an eligible subrecipient or by a subrecipient to a lower tier subrecipient. The term includes financial assistance when provided by any legal agreement, even if the agreement is called a contract, but does not include procurement of goods and services nor does it include any form of assistance which is excluded from the definition of "award" above.

Subrecipient means the legal entity to which a subaward is made and which is accountable to the recipient for the use of the funds provided. The term may include foreign or international organizations (such as agencies of the United Nations).

Supplies means all personal property excluding equipment, intangible property, and debt instruments as defined in this section, and inventions of a contractor conceived or first actually reduced to practice in the performance of work under a funding agreement ("subject inventions"), as defined in 37 CFR Part 401, "Rights to Inventions Made by Nonprofit Organizations and Small Business Firms Under Government Grants, Contracts, and Cooperative Agreements."

Suspension means an action by DOE that temporarily withdraws DOE sponsorship under an award, pending corrective action by the recipient or pending a decision to terminate the award by the DOE. Suspension of an award is a separate action from suspension under DOE regulations implementing E.O.'s 12549 and 12689, "Debarment and Suspension" (see 10 CFR Part 1036).

Termination means the cancellation of DOE sponsorship, in whole or in part, under an agreement at any time prior to the date of completion.

Third party in-kind contributions means the value of non-cash contributions provided by non-Federal third parties. Third party in-kind contributions may be in the form of real property, equipment, supplies and other expendable property, and the value of goods and services directly benefiting and specifically identifiable to the project or program.

Unliquidated obligations, for financial reports prepared on a cash basis, means the amount of obligations incurred by the recipient that have not been paid. For reports prepared on an accrued expenditure basis, they represent the amount of obligations incurred by the recipient for which an outlay has not been recorded.

Unobligated balance means the portion of the funds authorized by DOE that has not been obligated by the recipient and is determined by deducting the cumulative obligations from the cumulative funds authorized.

Unrecovered indirect cost means the difference between the amount awarded and the amount which could have been awarded under the recipient's approved negotiated indirect cost rate.

Working capital advance means a procedure whereby funds are advanced to the recipient to cover its estimated disbursement needs for a given initial period.

§ 600.102 Effect on other issuances.

For awards subject to this Subpart, all administrative requirements of codified program regulations, program manuals, handbooks and other nonregulatory materials which are inconsistent with the requirements of this Subpart shall be superseded, except to the extent they are required by statute, or authorized in accordance with the deviations provision in § 600.4.

§ 600.103 Deviations.

The deviation provisions of § 600.4 apply to this Subpart.

§ 600.104 Subawards.

Unless sections of this Subpart specifically exclude subrecipients from coverage, all DOE recipients, including State, local and Indian tribal governments, shall apply the provisions of this Subpart to subrecipients

performing work under awards if such subrecipients are institutions of higher education, hospitals, other non-profit organizations or commercial organizations. Thus, this Subpart is applicable to those types of organizations regardless of the type of recipient receiving the primary award. State and local government subrecipients are subject to the provisions of 10 CFR part 600, Subpart C, "Uniform Administrative Requirements for Grants and Cooperative Agreements to State and Local Governments."

Pre-Award Requirements

§ 600.110 Purpose.

Sections 600.111 through 600.117 prescribe forms and instructions and other pre-award matters to be used in applying for DOE awards.

§ 600.111 Pre-award policies.

(a) Use of Grants and Cooperative Agreements, and Contracts. In each instance, the DOE shall decide on the appropriate award instrument (i.e., grant, cooperative agreement, or contract). The Federal Grant and Cooperative Agreement Act (31 U.S.C. 6301–08) governs the use of grants, cooperative agreements and contracts. A grant or cooperative agreement shall be used only when the principal purpose of a transaction is to accomplish a public purpose of support or stimulation authorized by Federal statute. The statutory criterion for choosing between grants and cooperative agreements is that for the latter, "substantial involvement is expected between the executive agency and the State, local government, or other recipient when carrying out the activity contemplated in the agreement." Contracts shall be used when the principal purpose is acquisition of property or services for the direct benefit or use of the Federal Government.

(b) Public Notice and Priority Setting. DOE will, whenever practical, notify the public of its intended funding priorities for discretionary grant programs, unless funding priorities are established by Federal statute.

§ 600.112 Forms for applying for Federal assistance.

(a) General. An application for an award shall be on the form or in the format specified in a program rule, in the solicitation, or in these regulations (see Section 600.10). When the SF–424 form is not used, DOE shall indicate whether the application is subject to review by the State under E.O. 12372. DOE may also require applicants to complete—

(1) The Notice of Energy RD&D Project (DOE Form 538) if the application is for a research, development, or demonstration project; or

(2) The Federal Assistance Management Summary Report (DOE F 4600.5) or the Federal Assistance Milestone Plan (DOE F 4600.3) as a baseline plan in accordance with the terms and conditions of award if required by program rule or the solicitation. If a solicitation other than a program rule requires the use of one or both of these forms, the solicitation shall contain an explanation of how the information to be provided relates to the objectives of the program.

(b) Budgetary information. DOE may request and the applicant shall submit the minimum budgetary information necessary to evaluate the costs of the proposed project.

(1) Applicants for research awards, other than State, local, or Indian tribal governments, will use DOE budget forms ERF 4620.1 and ERF 4620.1A. All other applicants shall use the budget formats established in the solicitation or program regulations.

(2) DOE may, subsequent to receipt of an application, request additional information from an applicant when necessary for clarification or to make informed preaward determinations.

(c) Continuation and renewal applications. DOE may require that an application for a continuation or renewal award (see § 600.31 (b) and (c)) be made in the format or on the forms authorized by paragraphs (a) and (b) of this section.

§ 600.113 Debarment and suspension.

Recipients shall comply with the nonprocurement debarment and suspension common rule implementing E.O.'s 12549 and 12689, "Debarment and Suspension," 10 CFR Part 1036. This common rule restricts subawards and contracts with certain parties that are debarred, suspended or otherwise excluded from or ineligible for participation in Federal assistance programs or activities.

§ 600.114 Special award conditions.

(a) If an applicant or recipient has a history of poor performance, is not financially stable, has a management system that does not meet the standards prescribed in this Subpart; has not conformed to the terms and conditions of a previous award, or is not otherwise responsible, DOE may impose additional requirements as needed, without regard to the deviation provisions of § 600.4. Such applicant or recipient will be notified in writing as to the nature of the additional requirements, the reason why the additional requirements are being imposed, the nature of the corrective action needed, and the time allowed for completing the corrective actions. Reconsideration of the additional requirements may be requested at any time. Any special conditions shall be promptly removed once the conditions that prompted them have been corrected.

(b) A recipient may place a special restrictive condition, as specified in paragraph (a) of this section, in a subaward. In any such case, the recipient must notify DOE in writing within 15 days of the subaward. DOE shall decide whether to notify OMB and other interested parties.

§ 600.115 Metric system of measurement.

The Metric Conversion Act, as amended by the Omnibus Trade and Competitiveness Act (15 U.S.C. 205) declares that the metric system is the preferred measurement system for U.S. trade and commerce. The Act requires each Federal agency to establish a date or dates in consultation with the Secretary of Commerce, when the metric system of measurement will be used in the agency's procurements, grants, and other business-related activities. Metric implementation may take longer where the use of the system is initially impractical or likely to cause significant inefficiencies in the accomplishment of federally-funded activities. DOE will follow the provisions of E.O. 12770, "Metric Usage in Federal Government Programs."

§ 600.116 Resource Conservation and Recovery Act.

Under the Act (Pub. L. 94–580 codified at 42 U.S.C. 6962), any State agency or agency of a political subdivision of a State which is using appropriated Federal funds must comply with Section 6002. Section 6002 requires that preference be given in procurement programs to the purchase of specific products containing recycled materials identified in guidelines developed by the Environmental Protection Agency (EPA) (40 CFR Parts 247–254). Accordingly, State and local institutions of higher education, hospitals, and non-profit organizations that receive direct Federal awards or other Federal funds shall give preference in their procurement programs funded with Federal funds to the purchase of recycled products pursuant to the EPA guidelines.

§ 600.117 Certifications and representations.

Unless prohibited by statute or codified regulation, each Federal awarding agency is authorized and encouraged to allow recipients to submit certifications and representations required by statute, executive order, or regulation on an annual basis, if the recipients have ongoing and continuing relationships with the agency. Annual certifications and representations shall be signed by responsible officials with the authority to ensure recipients' compliance with the pertinent requirements.

Post-Award Requirements

Financial and Program Management

§ 600.120 Purpose of financial and program management.

Sections 600.121 through 600.128 prescribe standards for financial management systems, methods for making payments and rules for satisfying cost sharing and matching requirements, accounting for program income, budget revision approvals, making audits, determining allowability of cost, and establishing fund availability.

§ 600.121 Standards for financial management systems.

(a) Recipients shall relate financial data to performance data and develop unit cost information whenever practical. For awards that support research, it should be noted that it is generally not appropriate to develop unit cost information.

(b) Except for the provisions of 600.121(f) and 600.181, recipients' financial management systems shall provide for the following:

(1) Accurate, current and complete disclosure of the financial results of each federally-sponsored project or program in accordance with the reporting requirements set forth in § 600.152. If a DOE award requires reporting on an accrual basis from a recipient that maintains its records on other than an accrual basis, the recipient shall not be required to establish an accrual accounting system. These recipients may develop such accrual data for their reports on the basis of an analysis of the documentation on hand.

(2) Records that identify adequately the source and application of funds for federally-sponsored activities. These records shall contain information pertaining to Federal awards, authorizations, obligations, unobligated balances, assets, outlays, income and interest.

(3) Effective control over and accountability for all funds, property and other assets. Recipients shall adequately safeguard all such assets and assure they are used solely for authorized purposes.

(4) Comparison of outlays with budget amounts for each award. Whenever appropriate, financial information should be related to performance and unit cost data. As discussed in paragraph (a) of this section, unit cost data is generally not appropriate for awards that support research.

(5) Written procedures to minimize the time elapsing between the transfer of funds to the recipient from the U.S. Treasury and the issuance or redemption of checks, warrants or payments by other means for program purposes by the recipient. To the extent that the provisions of the Cash Management Improvement Act (CMIA) (Pub. L. 101–453) govern, payment methods of State agencies, instrumentalities, and fiscal agents shall be consistent with CMIA Treasury-State Agreements or the CMIA default procedures codified at 31 CFR Part 205, "Withdrawal of Cash from the Treasury for Advances under Federal Grant and Other Programs."

(6) Written procedures for determining the reasonableness, allocability and allowability of costs in accordance with the provisions of the applicable Federal cost principles and the terms and conditions of the award.

(7) Accounting records including cost accounting records that are supported by source documentation.

(c) Where the Federal Government guarantees or insures the repayment of money borrowed by the recipient, the Contracting Officer, at his or her discretion, may require adequate bonding and insurance if the bonding and insurance requirements of the recipient are not deemed adequate to protect the interest of the Federal Government.

(d) The Contracting Officer may require adequate fidelity bond coverage where the recipient lacks sufficient coverage to protect the Federal Government's interest.

(e) Where bonds are required in the situations described in §§ 600.121 (c) and (d), the bonds shall be obtained from companies holding certificates of authority as acceptable sureties, as prescribed in 31 CFR Part 223, "Surety Companies Doing Business with the United States."

(f) Individuals whose financial management systems do not meet the minimum standards of § 600.121 (b) shall maintain a separate bank account for deposit of award or subaward funds. Disbursements by the recipient or subrecipient from this account shall be supported by source documentation such as canceled checks, paid bills, receipts, payrolls, etc.

600.122 Payment.

(a) Payment methods shall minimize the time elapsing between the transfer of funds from the United States Treasury and the issuance or redemption of checks, warrants, or payment by other means by the recipients. Payment methods of State agencies or instrumentalities shall be consistent with Treasury-State CMIA agreements or default procedures codified at 31 CFR Part 205.

(b) Recipients will be paid in advance, provided they maintain or demonstrate the willingness to maintain:

(1) Written procedures that minimize the time elapsing between the transfer of funds and disbursement by the recipient, and

(2) Financial management systems that meet the standards for fund control and accountability as established in § 600.121. Cash advances to a recipient organization shall be limited to the minimum amounts needed and be timed to be in accordance with the actual, immediate cash requirements of the recipient organization in carrying out the purpose of the approved program or project. The timing and amount of cash advances shall be as close as is administratively feasible to the actual disbursements by the recipient organization for direct program or project costs and the proportionate share of any allowable indirect costs.

(c) Whenever possible, advances shall be consolidated to cover anticipated cash needs for all awards made by the DOE to the recipient.

(1) Advance payment mechanisms include, but are not limited to, Treasury check and electronic funds transfer.

(2) Advance payment mechanisms are subject to 31 CFR Part 205.

(3) Recipients may submit requests for advances and reimbursements at least monthly when electronic fund transfers are not used.

(d) Requests for Treasury check advance payment shall be submitted on SF–270, "Request for Advance or Reimbursement," or other forms as may be authorized by OMB. This form is not to be used when Treasury check advance payments are made to the recipient automatically through the use of a predetermined payment schedule or if precluded by special DOE instructions for electronic funds transfer.

(e) Reimbursement is the preferred method when the requirements in paragraph (b) of this section cannot be

met. DOE may also use this method on any construction agreement, or if the major portion of the construction project is accomplished through private market financing or Federal loans, and the Federal assistance constitutes a minor portion of the project.

(1) When the reimbursement method is used, DOE shall make payment within 30 days after receipt of the billing, unless the billing is improper.

(2) Recipients are authorized to submit requests for reimbursement at least monthly when electronic funds transfers are not used.

(f) If a recipient cannot meet the criteria for advance payments and DOE has determined that reimbursement is not feasible because the recipient lacks sufficient working capital, DOE may provide cash on a working capital advance basis. Under this procedure, DOE advances cash to the recipient to cover its estimated disbursement needs for an initial period generally geared to the recipient's disbursing cycle. Thereafter, DOE reimburses the recipient for its actual cash disbursements. The working capital advance method of payment will not be used for recipients unwilling or unable to provide timely advances to their subrecipient to meet the subrecipient's actual cash disbursements.

(g) To the extent available, recipients shall disburse funds available from repayments to and interest earned on a revolving fund, program income, rebates, refunds, contract settlements, audit recoveries and interest earned on such funds before requesting additional cash payments.

(h) Unless otherwise required by statute, DOE will not withhold payments for proper charges made by recipients at any time during the project period unless paragraph (h)(1) or (h)(2) of this section apply.

(1) A recipient has failed to comply with the project objectives, the terms and conditions of the award, or DOE reporting requirements.

(2) The recipient or subrecipient is delinquent in a debt to the United States. Under such conditions, the Federal awarding agency may, upon reasonable notice, inform the recipient that payments shall not be made for obligations incurred after a specified date until the conditions are corrected or the indebtedness to the Federal Government is liquidated. Before withholding any payment, DOE shall notify the recipient that payments shall not be made for obligations incurred after a specified date, which shall ordinarily be no sooner than 30 days from the date of the notice, until the recipient corrects the noncompliance or pays the indebtedness to the Federal government.

(i) Standards governing the use of banks and other institutions as depositories of funds advanced under awards are as follows.

(1) Except for situations described in paragraph (i)(2) of this section, DOE shall not require separate depository accounts for funds provided to a recipient or establish any eligibility requirements for depositories for funds provided to a recipient. However, recipients must be able to account for the receipt, obligation and expenditure of funds.

(2) Advances of Federal funds shall be deposited and maintained in insured accounts whenever possible.

(j) Consistent with the national goal of expanding the opportunities for women-owned and minority-owned business enterprises, recipients are encouraged to use women-owned and minority-owned banks (a bank which is owned at least 50 percent by women or minority group members).

(k) Recipients shall maintain advances of Federal funds in interest bearing accounts, unless paragraph (k)(1), (2) or (3) of this section apply.

(1) The recipient receives less than $120,000 in Federal awards per year.

(2) The best reasonably available interest bearing account would not be expected to earn interest in excess of $250 per year on Federal cash balances.

(3) The depository would require an average or minimum balance so high that it would not be feasible within the expected Federal and non-Federal cash resources.

(l) For those entities where CMIA and its implementing regulations do not apply, interest earned on Federal advances deposited in interest bearing accounts shall be remitted annually to the HHS Payment Management System through an electronic medium such as the FEDWIRE Deposit system. Recipients which do not have this capability should use a check. The address is the Department of Health and Human Services, Payment Management System, P.O. Box 6021, Rockville, MD 20852. Interest amounts up to $250 per year may be retained by the recipient for administrative expense. State universities and hospitals shall comply with CMIA, as it pertains to interest. If an entity subject to CMIA uses its own funds to pay pre-award costs for discretionary awards without prior written approval from the Federal awarding agency, it waives its right to recover the interest under CMIA.

(m) Except as noted elsewhere in this Subpart, only the following forms shall be authorized for the recipients in requesting advances and reimbursements. Federal agencies shall not require more than an original and two copies of these forms.

(1) SF–270, Request for Advance or Reimbursement. Each Federal awarding agency shall adopt the SF–270 as a standard form for all nonconstruction programs when electronic funds transfer or predetermined advance methods are not used. Federal awarding agencies, however, have the option of using this form for construction programs in lieu of the SF–271, "Outlay Report and Request for Reimbursement for Construction Programs."

(2) SF–271, Outlay Report and Request for Reimbursement for Construction Programs. Each Federal awarding agency shall adopt the SF–271 as the standard form to be used for requesting reimbursement for construction programs. However, a Federal awarding agency may substitute the SF–270 when the Federal awarding agency determines that it provides adequate information to meet Federal needs.

(n) The DOE may convert a recipient from advance payment to reimbursement whenever the recipient no longer meets the criteria for advance payment specified in paragraph (b) of this section. Any such conversion may be accomplished only after the DOE has advised the recipient in writing of the reasons for the proposed action and has provided a period of at least 30 days within which the recipient may take corrective action or provide satisfactory assurances of its intention to take such action.

(o) With prior DOE approval and in accordance with written DOE instructions, a recipient may assign to a bank, trust company or other financing institution, including any Federal lending agency, reimbursement by Treasury check due from DOE under the following conditions:

(1) The award provides for reimbursement totaling $1,000 or more;

(2) The assignment covers all amounts payable under the award that have not already been paid;

(3) Reassignment is prohibited; and

(4) The assignee files a written notice of award payment assignment and a true copy of the instrument of assignment with DOE. Any interest costs resulting from a loan obtained on the basis of an assignment are unallowable charges to DOE award funds or any required cost sharing.

(p) Recipients shall observe the requirements of this section in making or withholding payments to subrecipients except that the forms used by recipients are not required to be used

by subrecipients when requesting advances or reimbursement.

§ 600.123 Cost sharing or matching.

(a) All cost sharing or matching contributions, including cash and third party in-kind, shall meet all of the following criteria.

(1) Are verifiable from the recipient's records.

(2) Are not included as contributions for any other federally-assisted project or program.

(3) Are necessary and reasonable for proper and efficient accomplishment of project or program objectives.

(4) Are allowable under the applicable cost principles.

(5) Are not paid by the Federal Government under another award, except where authorized by Federal statute to be used for cost sharing or matching.

(6) Are provided for in the approved budget.

(7) Conform to other provisions of this Subpart, as applicable.

(b) Unrecovered indirect costs may be included as part of cost sharing or matching.

(c) Values for recipient contributions of services and property shall be established in accordance with the applicable cost principles. If DOE authorizes recipients to donate buildings or land for construction/facilities acquisition projects or long-term use, the value of the donated property for cost sharing or matching shall be the lesser of either paragraph (c)(1) or (2) of this section.

(1) The certified value of the remaining life of the property recorded in the recipient's accounting records at the time of donation.

(2) The current fair market value. However, when there is sufficient justification, DOE may approve the use of the current fair market value of the donated property, even if it exceeds the certified value at the time of donation to the project.

(d) Volunteer services furnished by professional and technical personnel, consultants, and other skilled and unskilled labor may be counted as cost sharing or matching if the service is an integral and necessary part of an approved project or program. Rates for volunteer services shall be consistent with those paid for similar work in the recipient's organization. In those instances in which the required skills are not found in the recipient organization, rates shall be consistent with those paid for similar work in the labor market in which the recipient competes for the kind of services involved. In either case, paid fringe benefits that are reasonable, allowable, and allocable may be included in the valuation.

(e) When an employer other than the recipient furnishes the services of an employee, these services shall be valued at the employee's regular rate of pay (plus an amount of fringe benefits that are reasonable, allowable, and allocable, but exclusive of overhead costs), provided these services are in the same skill for which the employee is normally paid.

(f) Donated supplies may include such items as office supplies, laboratory supplies or workshop and classroom supplies. Value assessed to donated supplies included in the cost sharing or matching share shall be reasonable and shall not exceed the fair market value of the property at the time of the donation.

(g) The method used for determining cost sharing or matching for donated equipment, buildings and land for which title passes to the recipient may differ according to the purpose of the award, if either paragraph (g)(1) or (2) of this section apply.

(1) If the purpose of the award is to assist the recipient in the acquisition of equipment, buildings or land, the total value of the donated property may be claimed as cost sharing or matching.

(2) If the purpose of the award is to support activities that require the use of equipment, buildings or land, normally only depreciation or use charges for equipment and buildings may be made. However, the full value of equipment or other capital assets and fair rental charges for land may be allowed, provided that DOE has approved the charges.

(h) The value of donated property shall be determined in accordance with the usual accounting policies of the recipient, with the following qualifications.

(1) The value of donated land and buildings shall not exceed its fair market value at the time of donation to the recipient as established by an independent appraiser (e.g., certified real property appraiser or General Services Administration representative) and certified by a responsible official of the recipient.

(2) The value of donated equipment shall not exceed the fair market value of equipment of the same age and condition at the time of donation.

(3) The value of donated space shall not exceed the fair rental value of comparable space as established by an independent appraisal of comparable space and facilities in a privately-owned building in the same locality.

(4) The value of loaned equipment shall not exceed its fair rental value.

(i) The following requirements pertain to the recipient's supporting records for in-kind contributions from third parties

(1) Volunteer services shall be documented and, to the extent feasible, supported by the same methods used by the recipient for its own employees.

(2) The basis for determining the valuation for personal service, material, equipment, buildings and land shall be documented.

(j) DOE shall specify in the solicitation or in the program rule, if any, any cost sharing requirement. The award document shall be specific as to whether the cost sharing is based on a minimum amount for the recipient or on a percentage of total costs.

(k) If DOE requires that a recipient provide cost sharing which is not required by statute or which exceeds a statutory minimum, DOE shall state in the program rule or solicitation the reasons for requiring such cost sharing, recommended or required levels of cost sharing, and the circumstances under which the requirement for cost sharing may be waived or adjusted during any negotiation.

(l) Whenever DOE negotiates the amount of cost sharing, DOE may take into account such factors as the use of program income (see § 600.124), patent rights, and rights in data. Foregone fee or profit shall not be considered in establishing the extent of cost sharing.

§ 600.124 Program income.

(a) The standards set forth in this section shall be used to account for program income related to projects financed in whole or in part with DOE funds.

(b) Except as provided in paragraph (h) of this section, program income earned during the project period shall be retained by the recipient and, in accordance with program regulations or the terms and conditions of the award, shall be used in one or more of the following ways.

(1) Added to funds committed to the project and used to further eligible project objectives.

(2) Used to finance the non-DOE share of the project.

(3) Deducted from the total project allowable cost in determining the net allowable costs on which the share of costs is based.

(c) When DOE authorizes the disposition of program income as described in paragraphs (b)(1) or (b)(2) of this section, program income in excess of any limits stipulated shall be used in accordance with paragraph (b)(3) of this section.

(d) In the event that the program regulations or the terms and conditions

of the award do not specify how program income is to be used, paragraph (b)(3) of this section shall apply automatically to all projects or programs except research. For awards that support research, paragraph (b)(1) of this section shall apply automatically unless the award indicates another alternative in the terms and conditions, the recipient is subject to special award conditions, as indicated in § 600.114, or the recipient is a commercial organization.

(e) Unless program regulations or the terms and conditions of the award provide otherwise, recipients shall have no obligation to the Federal Government regarding program income earned after the end of the project period.

(f) Unless program regulations or the terms and conditions of the award provide otherwise, costs incident to the generation of program income may be deducted from gross income to determine program income, provided these costs have not been charged to the award.

(g) Proceeds from the sale of property shall be handled in accordance with the requirements of the Property Standards (See §§ 600.130 through 600.137).

(h) Unless program regulations or the terms and condition of the award provide otherwise, recipients shall have no obligation to the Federal Government with respect to program income earned from license fees and royalties for copyrighted material, patents, patent applications, trademarks, and inventions produced under an award. However, Patent and Trademark Amendments (35 U.S.C. Chapter 18) apply to inventions made under an experimental, developmental, or research award.

§ 600.125 Revision of budget and program plans.

(a) The budget plan is the financial expression of the project or program as approved during the award process. It includes the sum of the Federal and non-Federal share when there are cost sharing requirements. It shall be related to performance for program evaluation purposes whenever appropriate.

(b) Recipients are required to report deviations from budget and program plans, and request prior approvals for budget and program plan revisions, in accordance with this section.

(c) For nonconstruction awards, recipients shall request prior approvals from the DOE for one or more of the following program or budget related reasons.

(1) Change in the scope or the objective of the project or program (even if there is no associated budget revision requiring prior written approval).

(2) Change in a key person specified in the application or award document.

(3) The absence for more than three months, or a 25 percent reduction in time devoted to the project, by the approved project director or principal investigator.

(4) The need for additional Federal funding.

(5) If required by program regulations, the transfer of amounts budgeted for indirect costs to absorb increases in direct costs, or vice versa.

(6) The inclusion, unless waived by program regulations or the terms and conditions of award, of costs that require prior approval in accordance with OMB Circular A–21, "Cost Principles for Institutions of Higher Education," OMB Circular A–122, "Cost Principles for Non-Profit Organizations," or 45 CFR Part 74 Appendix E, "Principles for Determining Costs Applicable to Research and Development under Grants and Contracts with Hospitals," or 48 CFR Part 31, "Contract Cost Principles and Procedures," as applicable.

(7) The transfer of funds allotted for training allowances (direct payment to trainees) to other categories of expense.

(8) Unless described in the application and funded in the approved awards, the subaward, transfer or contracting out of any work under an award. This provision does not apply to the purchase of supplies, material, equipment or general support services.

(d) No other prior approval requirements for specific items may be imposed unless a deviation has been approved in accordance with § 600.4.

(e) Except for requirements listed in paragraphs (c)(1) and (c)(4) of this section, program regulations may waive cost-related and administrative prior written approvals required by this Subpart and its Appendices. Such waivers may include authorizing recipients to do any one or more of the following.

(1) Incur pre-award costs 90 calendar days prior to award without prior approval or more than 90 calendar days with the prior approval of DOE. All pre-award costs are incurred at the recipient's risk (i.e., DOE is under no obligation to reimburse such costs if for any reason the recipient does not receive an award or if the award is less than anticipated and inadequate to cover such costs).

(2) Initiate a one-time extension of the expiration date of the final budget period of the project of up to 12 months unless one or more of the following conditions apply.

(i) The terms and conditions of award prohibit the extension.

(ii) The extension requires additional Federal funds.

(iii) The extension involves any change in the approved objectives or scope of the project.

(iv) The extension is being exercised merely for the purpose of using unobligated balances. For one-time extensions, the recipient must notify the DOE in writing with the supporting reasons and revised expiration date at least 10 days before the expiration date specified in the award.

(3) Carry forward unobligated balances to subsequent funding periods.

(4) For awards that support research, unless the terms and conditions of award provide otherwise, the prior approval requirements described in paragraph (e) of this section are automatically waived (i.e., recipients need not obtain such prior approvals) unless one of the conditions included in § 600.125(e)(2) applies.

(5) For continuation awards within a multiple year project in support of research, prior to receipt of continuation funding, preaward expenditures by recipients are not subject to the limitation or approval requirements of § 600.125(e)(1). Nevertheless, incurrence by the recipient does not impose any obligation on DOE if a continuation award is not subsequently made, or if an award is made for a lesser amount than the recipient expected.

(f) Program regulations may restrict the transfer of funds among direct cost categories or programs, functions and activities for awards in which DOE's share of the project exceeds $100,000 and the cumulative amount of such transfers exceeds or is expected to exceed 10 percent of the total budget as last approved by DOE. However, no program regulation shall permit a transfer that would cause any Federal appropriation or part thereof to be used for purposes other than those consistent with the original intent of the appropriation.

(g) All other changes to nonconstruction budgets, except for the changes described in paragraph (j) of this section, do not require prior approval.

(h) For construction awards, recipients shall request prior written approval promptly from the Contracting Officer for budget revisions whenever paragraph (h) (1), (2) or (3) of this section apply.

(1) The revision results from changes in the scope or the objective of the project or program.

(2) The need arises for additional Federal funds to complete the project.

(3) A revision is desired which involves specific costs for which prior written approval requirements may be imposed consistent with applicable OMB cost principles listed in § 600.127.

(i) Except in accordance with the deviation procedures in 600.4 or as may be provided for in program regulations, no other prior approval requirements for specific items will be imposed by DOE.

(j) When DOE makes an award that provides support for both construction and nonconstruction work, DOE may require the recipient to request prior approval from DOE before making any fund or budget transfers between the two types of work supported.

(k) For both construction and nonconstruction awards, recipients shall notify DOE in writing promptly whenever the amount of Federal authorized funds is expected to exceed the needs of the recipient for the project period by more than $5000 or five percent of the Federal award, whichever is greater. This notification shall not be required if an application for additional funding is submitted for a continuation award.

(l) Requests for budget revisions may be made by letter.

(m) Within 30 calendar days from the date of receipt of the request for budget revisions, DOE shall review the request and notify the recipient whether the budget revisions have been approved. If the revision is still under consideration at the end of 30 calendar days, DOE shall inform the recipient in writing of the date when the recipient may expect the decision.

(n) DOE approval or disapproval of a request for a budget or project revision shall be in writing and signed by a DOE Contracting Officer.

(o) A request by a subrecipient for prior approval shall be addressed in writing to the recipient. The recipient shall promptly review such request and shall approve or disapprove the request in writing within 30 days from the date of the recipient's request for the revision. A recipient shall not approve any budget or project revision which is inconsistent with the purpose or terms and conditions of the DOE award. If the revision requested by the subrecipient would result in a change to the recipient's approved budget or approved project which requires DOE prior approval, the recipient shall obtain DOE approval before approving such revision.

§ 600.126 Non-Federal audits.

(a) Recipients and subrecipients that are institutions of higher education or other non-profit organizations shall be subject to the audit requirements contained in OMB Circular A–133, "Audits of Institutions of Higher Education and Other Non-Profit Institutions."

(b) State and local governments shall be subject to the audit requirements contained in the Single Audit Act (31 U.S.C. 7501–7) and Federal awarding agency regulations implementing OMB Circular A–128, "Audits of State and Local Governments."

(c) The Contracting Officer may audit, or cause to be audited, awards to hospitals not covered by the audit provisions of OMB Circular A–133 whenever and in the degree of detail he/she deems necessary. The Contracting Officer shall rely on available audit reports in determining the need for and scope of such audits. The hospital has similar authority in auditing subrecipients.

(d) The Contracting Officer may audit, or cause to be audited, awards to commercial organizations whenever and in the degree of detail he/she deems necessary. The Contracting Officer shall rely on available audit reports in determining the need for and scope of such audits. The commercial organization has similar authority in auditing subrecipients.

(e) The Contracting Officer may audit, or cause to be audited, awards to individuals whenever and in the degree of detail he/she deems necessary. The Contracting Officer shall rely on available audit reports in determining the need for and scope of such audits.

§ 600.127 Allowable costs.

(a) *General.* For each kind of recipient, there is a set of Federal principles for determining allowable costs. Allowability of costs shall be determined in accordance with the cost principles applicable to the entity incurring the costs. Thus, allowability of costs incurred by State, local or federally-recognized Indian tribal governments is determined in accordance with the provisions of OMB Circular A–87, "Cost Principles for State and Local Governments." The allowability of costs incurred by non-profit organizations is determined in accordance with the provisions of OMB Circular A–122, "Cost Principles for Non-Profit Organizations." The allowability of costs incurred by institutions of higher education is determined in accordance with the provisions of OMB Circular A–21, "Cost Principles for Educational Institutions." The allowability of costs incurred by hospitals is determined in accordance with the provisions of Appendix E of 45 CFR Part 74, "Principles for Determining Costs Applicable to Research and Development Under Grants and Contracts with Hospitals." The allowability of costs incurred by commercial organizations and those non-profit organizations listed in Attachment C to Circular A–122 is determined in accordance with the provisions of the Federal Acquisition Regulation (FAR) at 48 CFR Part 31.

(b) *Indirect costs.* Unless restricted by Federal statute or program rule, DOE shall provide for the reimbursement of appropriate indirect costs.

(1) DOE shall include an amount for indirect costs in an award only if the applicant requests reimbursement of such costs and—

(i) Submits evidence that a cognizant Federal agency has been assigned to establish indirect cost rates for the applicant and indicates or provides evidence that—

(A) A current agreement containing an applicable approved indirect cost rate(s) covering all or part of the budget period for which DOE may provide funding has been established; or

(B) An indirect cost proposal has been submitted to the cognizant agency in order to establish an applicable approved indirect cost rate(s) covering all or part of the budget period for which DOE may provide funding; or

(C) An indirect cost proposal covering all or part of the budget period and applicable to the activities for which DOE may provide funding will be submitted to the cognizant agency for approval no later than three months after the beginning date of the initial budget period of the DOE award or, for subsequent budget periods, in accordance with any schedule established by the cognizant agency; or

(ii) If not assigned to a cognizant agency, the applicant includes, in the application, data that is current, complete, accurate, and sufficient to allow the Contracting Officer to determine a rate(s) for indirect costs. If the total approved budget will not exceed $100,000 or if the amount requested for indirect costs does not exceed $5,000, DOE may waive the requirement for negotiation of a rate and, in lieu thereof, provide a reasonable allowance for such costs.

(2) Indirect cost proposals shall be prepared and submitted in accordance with the applicable Federal cost principles and instructions from the cognizant agency or from DOE, as appropriate.

(3) If a subaward under an award or subaward provides for the payment of indirect costs, the recipient or subrecipient shall be responsible for negotiating appropriate indirect costs, using the cost principles applicable to

the subrecipient or contractor, unless the subrecipient or contractor has negotiated an applicable rate directly with DOE or another Federal department or agency. DOE may review and audit the procedures a recipient or subrecipient uses in conducting indirect cost negotiations.

(c) *Fee or profit.* No increment above cost may be paid to a recipient or subrecipient under a DOE award or subaward, except for SBIR recipients as provided in § 600.181(d)(3). A fee or profit may be paid to a contractor providing goods or services under a contract with a recipient or subrecipient.

§ 600.128 Period of availability of funds.

Where a funding period is specified, a recipient may charge to the award only allowable costs resulting from obligations incurred during the funding period and any pre-award costs authorized by DOE.

Property Standards

§ 600.130 Purpose of property standards.

Sections 600.131 through 600.137 set forth uniform standards governing management and disposition of property furnished by the Federal Government or whose cost was charged to a project supported by a Federal award. Recipients shall observe these standards under awards and shall not impose additional requirements, unless specifically required by Federal statute or program regulations. The recipient may use its own property management standards and procedures provided it observes the provisions of §§ 600.131 through 600.137.

§ 600.131 Insurance coverage.

Recipients shall, at a minimum, provide the equivalent insurance coverage for real property and equipment acquired with DOE funds as provided to property owned by the recipient. Federally-owned property need not be insured unless required by the terms and conditions of the award.

§ 600.132 Real property.

Unless otherwise provided by statute or program regulations, the requirements concerning the use and disposition of real property acquired in whole or in part under awards are as follows.

(a) Title to real property shall vest in the recipient subject to the condition that the recipient shall use the real property for the authorized purpose of the project as long as it is needed and shall not encumber the property without approval of DOE.

(b) The recipient shall obtain written approval by DOE for the use of real property in other federally-sponsored projects when the recipient determines that the property is no longer needed for the purpose of the original project. Use in other projects shall be limited to those under federally-sponsored projects (i.e., awards) or programs that have purposes consistent with those authorized for support by DOE.

(c) When the real property is no longer needed as provided in paragraphs (a) and (b) of this section, the recipient shall request disposition instructions from DOE or its successor Federal awarding agency. DOE will give one or more of the following disposition instructions.

(1) The recipient may be permitted to retain title without further obligation to the Federal Government after it compensates the Federal Government for that percentage of the current fair market value of the property attributable to the Federal participation in the project.

(2) The recipient may be directed to sell the property under guidelines provided by DOE and pay the Federal Government for that percentage of the current fair market value of the property attributable to the Federal participation in the project (after deducting actual and reasonable selling and fix-up expenses, if any, from the sales proceeds). When the recipient is authorized or required to sell the property, proper sales procedures shall be established that provide for competition to the extent practicable and result in the highest possible return.

(3) The recipient may be directed to transfer title to the property to the Federal Government or to an eligible third party provided that, in such cases, the recipient shall be entitled to compensation for its attributable percentage of the current fair market value of the property.

§ 600.133 Federally-owned and exempt property.

(a) *Federally-owned property.*

(1) Title to federally-owned property remains vested in the Federal Government. Recipients shall submit annually an inventory listing of federally-owned property in their custody to DOE. Upon completion of the award or when the property is no longer needed, the recipient shall report the property to DOE for further Federal agency utilization.

(2) If DOE has no further need for the property, it shall be declared excess and reported to the General Services Administration, unless DOE has statutory authority to dispose of the property by alternative methods (e.g., the authority provided by the Federal Technology Transfer Act (15 U.S.C. 3710 (i)) to donate research equipment to educational and non-profit organizations in accordance with E.O. 12821, "Improving Mathematics and Science Education in Support of the National Education Goals.") Appropriate instructions shall be issued to the recipient by DOE.

(b) *Exempt property.* When statutory authority exists, DOE may vest title to property acquired with Federal funds in the recipient without further obligation to the Federal Government and under conditions DOE considers appropriate. For example, under 31 U.S.C. 6306, DOE may so vest title to tangible personal property under a grant or cooperative agreement for basic or applied research in a nonprofit institution of higher education or in a nonprofit organization whose primary purpose is conducting scientific research. Such property is "exempt property." Program regulations or the terms and conditions of award may establish provisions for vesting title to exempt property. Should such conditions not be established and the recipient has no need for the equipment, the recipient shall request disposition instructions from DOE. If DOE does not issue disposition instructions within 120 calendar days of receipt of the request, title to the property shall vest in the recipient without further obligation to the Federal Government. If, at the end of the project, DOE fails to issue disposition instructions within 120 calendar days of the receipt of a final inventory, title to the property shall vest in the recipient without further obligation to the Federal Government.

§ 600.134 Equipment.

(a) Title to equipment acquired by a recipient with Federal funds shall vest in the recipient, subject to conditions of this section.

(b) The recipient shall not use equipment acquired with Federal funds to provide services to non-Federal outside organizations for a fee that is less than private companies charge for equivalent services, unless specifically authorized by Federal statute, for as long as the Federal Government retains an interest in the equipment.

(c) The recipient shall use the equipment in the project or program for which it was acquired as long as needed, whether or not the project or program continues to be supported by Federal funds and shall not encumber the property without approval of DOE. When no longer needed for the original

project or program, the recipient shall use the equipment in connection with its other federally-sponsored activities, in the following order of priority:

(1) Activities sponsored by DOE, then

(2) Activities sponsored by other Federal agencies.

(d) During the time that equipment is used on the project or program for which it was acquired, the recipient shall make it available for use on other projects or programs if such other use will not interfere with the work on the project or program for which the equipment was originally acquired. First preference for such other use shall be given to other projects or programs sponsored by DOE that financed the equipment; second preference shall be given to projects or programs sponsored by other Federal awarding agencies. If the equipment is owned by the Federal Government, use on other activities not sponsored by the Federal Government shall be permissible if authorized by DOE. User charges shall be treated as program income.

(e) When acquiring replacement equipment, the recipient may use the equipment to be replaced as trade-in or sell the equipment and use the proceeds to offset the costs of the replacement equipment subject to the approval of DOE.

(f) The recipient's property management standards for equipment acquired with Federal funds and federally-owned equipment shall include all of the following.

(1) Equipment records shall be maintained accurately and shall include the following information.

(i) A description of the equipment.

(ii) Manufacturer's serial number, model number, Federal stock number, national stock number, or other identification number.

(iii) Source of the equipment, including the award number.

(iv) Whether title vests in the recipient or the Federal Government.

(v) Acquisition date (or date received, if the equipment was furnished by the Federal Government) and cost.

(vi) Information from which one can calculate the percentage of Federal participation in the cost of the equipment (not applicable to equipment furnished by the Federal Government).

(vii) Location and condition of the equipment and the date the information was reported.

(viii) Unit acquisition cost.

(ix) Ultimate disposition data, including date of disposal and sales price or the method used to determine current fair market value where a recipient compensates DOE for its share.

(2) Equipment owned by the Federal Government shall be identified to indicate Federal ownership.

(3) A physical inventory of equipment shall be taken and the results reconciled with the equipment records at least once every two years. Any differences between quantities determined by the physical inspection and those shown in the accounting records shall be investigated to determine the causes of the difference. The recipient shall, in connection with the inventory, verify the existence, current utilization, and continued need for the equipment.

(4) A control system shall be in effect to insure adequate safeguards to prevent loss, damage, or theft of the equipment. Any loss, damage, or theft of equipment shall be investigated and fully documented; if the equipment was owned by the Federal Government, the recipient shall promptly notify DOE.

(5) Adequate maintenance procedures shall be implemented to keep the equipment in good condition.

(6) Where the recipient is authorized or required to sell the equipment, proper sales procedures shall be established which provide for competition to the extent practicable and result in the highest possible return.

(g) When the recipient no longer needs the equipment, the equipment may be used for other activities in accordance with the following standards. Equipment with a current per-unit fair market value of less than $5000 may be retained, sold or otherwise disposed of with no further obligation to the awarding agency. For equipment with a current per unit fair market value of $5000 or more, the recipient may retain the equipment for other uses provided that compensation is made to the original Federal awarding agency or its successor. The amount of compensation shall be computed by applying the percentage of Federal participation in the cost of the original project or program to the current fair market value of the equipment. If the recipient has no need for the equipment, the recipient shall request disposition instructions from DOE. DOE shall determine whether the equipment can be used to meet DOE's requirements. If no requirement exists within DOE, the availability of the equipment shall be reported to the General Services Administration by DOE to determine whether a requirement for the equipment exists in other Federal agencies. DOE will issue instructions to the recipient no later than 120 calendar days after the recipient's request and the following procedures shall govern.

(1) If so instructed or if disposition instructions are not issued within 120 calendar days after the recipient's request, the recipient shall sell the equipment and reimburse DOE an amount computed by applying to the sales proceeds the percentage of Federal participation in the cost of the original project or program. However, the recipient shall be permitted to deduct and retain from the Federal share $500 or ten percent of the proceeds, whichever is less, for the recipient's selling and handling expenses.

(2) If the recipient is instructed to ship the equipment elsewhere, the recipient shall be reimbursed by the Federal Government by an amount which is computed by applying the percentage of the recipient's participation in the cost of the original project or program to the current fair market value of the equipment, plus any reasonable shipping or interim storage costs incurred.

(3) If the recipient is instructed to otherwise dispose of the equipment, the recipient shall be reimbursed by DOE for such costs incurred in its disposition.

(h) DOE reserves the right, at the end of a project, to transfer the title to the Federal Government or to a third party named by DOE when such third party is otherwise eligible under existing statutes. Such transfer shall be subject to the following standards.

(1) The equipment shall be appropriately identified in the award or otherwise made known to the recipient in writing.

(2) DOE shall issue disposition instructions within 120 calendar days after receipt of a final inventory. The final inventory shall list all equipment acquired with award funds and federally-owned equipment. If DOE fails to issue disposition instructions within the 120 calendar day period, the provisions of § 600.134(g)(1) apply.

(3) When DOE exercises its right to take title, the equipment shall be subject to the provisions for federally-owned equipment.

§ 600.135 Supplies and other expendable property.

(a) Title to supplies and other expendable property shall vest in the recipient upon acquisition. If there is a residual inventory of unused supplies exceeding $5000 in total aggregate value upon termination or completion of the project or program and the supplies are not needed for any other federally-sponsored project or program, the recipient shall retain the supplies for use on non-Federal sponsored activities or sell them, but shall, in either case, compensate the Federal Government for its share. The amount of compensation

shall be computed in the same manner as for equipment.

(b) The recipient shall not use supplies acquired with Federal funds to provide services to non-Federal outside organizations for a fee that is less than private companies charge for equivalent services, unless specifically authorized by Federal statute as long as the Federal Government retains an interest in the supplies.

§ 600.136 Intangible property.

(a) The recipient may copyright any work that is subject to copyright and was developed, or for which ownership was purchased, under an award. DOE reserves a royalty-free, nonexclusive and irrevocable right to reproduce, publish, or otherwise use the work for Federal purposes, and to authorize others to do so.

(b) Recipients are subject to applicable regulations governing patents and inventions, including government-wide regulations issued by the Department of Commerce at 37 CFR Part 401, "Rights to Inventions Made by Nonprofit Organizations and Small Business Firms Under Government Grants, Contracts and Cooperative Agreements."

(c) DOE has the right to:

(1) Obtain, reproduce, publish or otherwise use the data first produced under an award.

(2) Authorize others to receive, reproduce, publish, or otherwise use such data for Federal purposes.

(d) Title to intangible property and debt instruments acquired under an award or subaward vests upon acquisition in the recipient. The recipient shall use that property for the originally-authorized purpose, and the recipient shall not encumber the property without approval of DOE. When no longer needed for the originally authorized purpose, disposition of the intangible property shall occur in accordance with the provisions of § 600.134(g).

§ 600.137 Property trust relationship.

Real property, equipment, intangible property and debt instruments that are acquired or improved with Federal funds shall be held in trust by the recipient as trustee for the beneficiaries of the project or program under which the property was acquired or improved. Recipients shall record liens or other appropriate notices of record to indicate that personal or real property has been acquired or improved with Federal funds and that use and disposition conditions apply to the property.

Procurement Standards

§ 600.140 Purpose of procurement standards.

Sections 600.141 through 600.148 set forth standards for use by recipients in establishing procedures for the procurement of supplies and other expendable property, equipment, real property and other services with Federal funds. These standards are furnished to ensure that such materials and services are obtained in an effective manner and in compliance with the provisions of applicable Federal statutes and executive orders. No additional procurement standards or requirements shall be imposed by DOE upon recipients, unless specifically required by Federal statute or executive order or in accordance with the deviation procedures of § 600.4.

§ 600.141 Recipient responsibilities.

The standards contained in this section do not relieve the recipient of the contractual responsibilities arising under its contract(s). The recipient is the responsible authority, without recourse to DOE regarding the settlement and satisfaction of all contractual and administrative issues arising out of procurements entered into in support of an award or other agreement. This includes disputes, claims, protests of award, source evaluation or other matters of a contractual nature. Matters concerning violation of statute are to be referred to such Federal, State or local authority as may have proper jurisdiction.

§ 600.142 Codes of conduct.

The recipient shall maintain written standards of conduct governing the performance of its employees engaged in the award and administration of contracts. No employee, officer, or agent shall participate in the selection, award, or administration of a contract supported by Federal funds if a real or apparent conflict of interest would be involved. Such a conflict would arise when the employee, officer, or agent, any member of his or her immediate family, his or her partner, or an organization which employs or is about to employ any of the parties indicated herein, has a financial or other interest in the firm selected for an award. The officers, employees, and agents of the recipient shall neither solicit nor accept gratuities, favors, or anything of monetary value from contractors, or parties to subagreements. However, recipients may set standards for situations in which the financial interest is not substantial or the gift is an unsolicited item of nominal value. The standards of conduct shall provide for disciplinary actions to be applied for violations of such standards by officers, employees, or agents of the recipient.

§ 600.143 Competition.

All procurement transactions shall be conducted in a manner to provide, to the maximum extent practical, open and free competition. The recipient shall be alert to organizational conflicts of interest as well as noncompetitive practices among contractors that may restrict or eliminate competition or otherwise restrain trade. In order to ensure objective contractor performance and eliminate unfair competitive advantage, contractors that develop or draft specifications, requirements, statements of work, invitations for bids and/or requests for proposals shall be excluded from competing for such procurements. Awards shall be made to the bidder or offeror whose bid or offer is responsive to the solicitation and is most advantageous to the recipient, price, quality and other factors considered. Solicitations shall clearly set forth all requirements that the bidder or offeror shall fulfill in order for the bid or offer to be evaluated by the recipient. Any and all bids or offers may be rejected when it is in the recipient's interest to do so.

§ 600.144 Procurement procedures.

(a) All recipients shall establish written procurement procedures. These procedures shall provide for, at a minimum, that paragraphs (a)(1), (2) and (3) of this section apply.

(1) Recipients avoid purchasing unnecessary items.

(2) Where appropriate, an analysis is made of lease and purchase alternatives to determine which would be the most economical and practical procurement.

(3) Solicitations for goods and services provide for all of the following.

(i) A clear and accurate description of the technical requirements for the material, product or service to be procured. In competitive procurements, such a description shall not contain features which unduly restrict competition.

(ii) Requirements which the bidder/offeror must fulfill and all other factors to be used in evaluating bids or proposals.

(iii) A description, whenever practicable, of technical requirements in terms of functions to be performed or performance required, including the range of acceptable characteristics or minimum acceptable standards.

(iv) The specific features of "brand name or equal" descriptions that

bidders are required to meet when such items are included in the solicitation.

(v) The acceptance, to the extent practicable and economically feasible, of products and services dimensioned in the metric system of measurement.

(vi) Preference, to the extent practicable and economically feasible, for products and services that conserve natural resources and protect the environment and are energy efficient.

(b) Positive efforts shall be made by recipients to utilize small businesses, minority-owned firms, and women's business enterprises, whenever possible. Recipients of DOE awards shall take all of the following steps to further this goal.

(1) Ensure that small businesses, minority-owned firms, and women's business enterprises are used to the fullest extent practicable.

(2) Make information on forthcoming opportunities available and arrange time frames for purchases and contracts to encourage and facilitate participation by small businesses, minority-owned firms, and women's business enterprises.

(3) Consider in the contract process whether firms competing for larger contracts intend to subcontract with small businesses, minority-owned firms, and women's business enterprises.

(4) Encourage contracting with consortiums of small businesses, minority wned firms and women's business enterprises when a contract is too large for one of these firms to handle individually.

(5) Use the services and assistance, as appropriate, of such organizations as the Small Business Administration and the Department of Commerce's Minority Business Development Agency in the solicitation and utilization of small businesses, minority-owned firms and women's business enterprises.

(c) The type of procuring instruments used (e.g., fixed price contracts, cost reimbursable contracts, purchase orders, and incentive contracts) shall be determined by the recipient but shall be appropriate for the particular procurement and for promoting the best interest of the program or project involved. The "cost-plus-a-percentage-of-cost" or "percentage of construction cost" methods of contracting shall not be used.

(d) Contracts shall be made only with responsible contractors who possess the potential ability to perform successfully under the terms and conditions of the proposed procurement. Consideration shall be given to such matters as contractor integrity, record of past performance, financial and technical resources or accessibility to other necessary resources. In certain circumstances, contracts with certain parties are restricted by DOE's implementation, in 10 CFR Part 1036, of E.O.'s 12549 and 12689, "Debarment and Suspension."

(e) Recipients shall, on request, make available for DOE, pre-award review and procurement documents, such as request for proposals or invitations for bids, independent cost estimates, etc., when any of the following conditions apply.

(1) A recipient's procurement procedures or operation fails to comply with the procurement standards in this Subpart.

(2) The procurement is expected to exceed the small purchase threshold fixed at 41 U.S.C. 403 (11) (currently $25,000) and is to be awarded without competition or only one bid or offer is received in response to a solicitation.

(3) The procurement, which is expected to exceed the small purchase threshold, specifies a "brand name" product.

(4) The proposed award over the small purchase threshold is to be awarded to other than the apparent low bidder under a sealed bid procurement.

(5) A proposed contract modification changes the scope of a contract or increases the contract amount by more than the amount of the small purchase threshold.

(f) By agreement of the recipient or subrecipient and the contractor, if consistent with the recipient's or subrecipient's usual business practices and applicable state and local law, any contract to which this section applies may provide for the payment of interest penalties on amounts overdue under such contract except that—

(1) In no case shall any obligation to pay such interest penalties be construed to be an obligation of the Federal government, and

(2) Any payment of such interest penalties may not be made from DOE funds nor be counted toward meeting a cost sharing requirement of a DOE award.

§ 600.145 Cost and price analysis.

Some form of cost or price analysis shall be made and documented in the procurement files in connection with every procurement action. Price analysis may be accomplished in various ways, including the comparison of price quotations submitted, market prices and similar indicia, together with discounts. Cost analysis is the review and evaluation of each element of cost to determine reasonableness, allocability and allowability.

§ 600.146 Procurement records.

Procurement records and files for purchases in excess of the small purchase threshold shall include the following at a minimum:

(a) Basis for contractor selection,

(b) Justification for lack of competition when competitive bids or offers are not obtained, and

(c) Basis for award cost or price.

§ 600.147 Contract administration.

A system for contract administration shall be maintained to ensure contractor conformance with the terms, conditions and specifications of the contract and to ensure adequate and timely follow up of all purchases. Recipients shall evaluate contractor performance and document, as appropriate, whether contractors have met the terms, conditions and specifications of the contract.

§ 600.148 Contract provisions.

The recipient shall include, in addition to provisions to define a sound and complete agreement, the following provisions in all contracts. The following provisions shall also be applied to subcontracts.

(a) Contracts in excess of the small purchase threshold shall contain contractual provisions or conditions that allow for administrative, contractual, or legal remedies in instances in which a contractor violates or breaches the contract terms, and provide for such remedial actions as may be appropriate.

(b) All contracts in excess of the small purchase threshold shall contain suitable provisions for termination by the recipient, including the manner by which termination shall be effected and the basis for settlement. In addition, such contracts shall describe conditions under which the contract may be terminated for default as well as conditions where the contract may be terminated because of circumstances beyond the control of the contractor.

(c) Except as otherwise required by statute, an award that requires the contracting (or subcontracting) for construction or facility improvements shall provide for the recipient to follow its own requirements relating to bid guarantees, performance bonds, and payment bonds unless the construction contract or subcontract exceeds $100,000. For those contracts or subcontracts exceeding $100,000, DOE may accept the bonding policy and requirements of the recipient, provided the DOE has made a determination that the Federal Government's interest is adequately protected. If such a determination has not been made, the

minimum requirements shall be as follows.

(1) A bid guarantee from each bidder equivalent to five percent of the bid price. The "bid guarantee" shall consist of a firm commitment such as a bid bond, certified check, or other negotiable instrument accompanying a bid as assurance that the bidder shall, upon acceptance of his bid, execute such contractual documents as may be required within the time specified.

(2) A performance bond on the part of the contractor for 100 percent of the contract price. A "performance bond" is one executed in connection with a contract to secure fulfillment of all the contractor's obligations under such contract.

(3) A payment bond on the part of the contractor for 100 percent of the contract price. A "payment bond" is one executed in connection with a contract to assure payment as required by statute of all persons supplying labor and material in the execution of the work provided for in the contract.

(4) Where bonds are required in the situations described herein, the bonds shall be obtained from companies holding certificates of authority as acceptable sureties pursuant to 31 CFR part 223, "Surety Companies Doing Business with the United States."

(d) All negotiated contracts (except those for less than the small purchase threshold) awarded by recipients shall include a provision to the effect that the recipient, DOE, the Comptroller General of the United States, or any of their duly authorized representatives, shall have access to any books, documents, papers and records of the contractor which are directly pertinent to a specific program for the purpose of making audits, examinations, excerpts and transcriptions.

(e) All contracts, including small purchases, awarded by recipients and their contractors shall contain the procurement provisions of Appendix A to this Subpart, as applicable.

§ 600.149 Resource Conservation and Recovery Act (RCRA).

Recipients' procurements shall comply with applicable requirements of RCRA, as described at Section 600.116 of this Subpart.

Reports and Records

§ 600.150 Purpose of reports and records.

Sections 600.151 through 600.153 set forth the procedures for monitoring and reporting on the recipient's financial and program performance and the necessary standard reporting forms. They also set forth record retention requirements.

§ 600.151 Monitoring and reporting program performance.

(a) Recipients are responsible for managing and monitoring each project, program, subaward, function or activity supported by the award. Recipients shall monitor subawards to ensure subrecipients have met the audit requirements as delineated in § 600.126.

(b) The terms and conditions of the award will prescribe the frequency with which the performance reports shall be submitted. Except as provided in paragraph (f) of this section, performance reports shall not be required more frequently than quarterly or less frequently than annually. Annual reports shall be due 90 calendar days after the award year; quarterly or semi-annual reports shall be due 30 days after the reporting period. DOE may require annual reports before the anniversary dates of multiple year awards in lieu of these requirements. The final performance reports are due 90 calendar days after the expiration or termination of the award.

(c) If inappropriate, a final technical or performance report shall not be required after completion of the project.

(d) When required, performance reports shall generally contain, for each award, brief information on each of the following.

(1) A comparison of actual accomplishments with the goals and objectives established for the period, the findings of the investigator, or both. Whenever appropriate and the output of programs or projects can be readily quantified, such quantitative data should be related to cost data for computation of unit costs.

(2) Reasons why established goals were not met, if appropriate.

(3) Other pertinent information including, when appropriate, analysis and explanation of cost overruns or high unit costs.

DOE may specify in the award that the recipient provide this information on the Federal Assistance Program/Project Status Report (DOE F 4600.6), the technical reporting formats, or the Federal Assistance Management Summary Report. DOE may require that the Federal Assistance Management Summary Report be used as a performance report only when such use is authorized by program rule or the need for this form is explained in the solicitation. The requirements of this section concerning reporting frequency and deadlines shall apply to the Federal Assistance Management Summary Report. (See also Section 600.112 with regard to use of this form as part of the award application.)

(e) Recipients shall not be required to submit more than the original and two copies of performance reports.

(f) Recipients shall immediately notify DOE of developments that have a significant impact on the award-supported activities. Also, notification shall be given in the case of problems, delays, or adverse conditions which materially impair the ability to meet the objectives of the award. This notification shall include a statement of the action taken or contemplated, and any assistance needed to resolve the situation.

(g) DOE may make site visits, as needed.

(h) DOE shall comply with applicable clearance requirements of 5 CFR Part 1320 when requesting performance data from recipients.

(i) Recipients may place performance reporting requirements on subawards consistent with the provisions of this section and shall require interim reporting in accordance with § 600.151(f).

§ 600.152 Financial reporting.

(a) The following forms or such other forms as may be approved by OMB are authorized for obtaining financial information from recipients.

(1) SF–269 or SF–269A, Financial Status Report.

(i) Recipients shall use the SF–269 or SF–269A to report the status of funds for all nonconstruction projects or programs, except that DOE has the option of not requiring the SF–269 or SF–269A when the SF–270, Request for Advance or Reimbursement, or SF–272, Report of Federal Cash Transactions, is determined to provide adequate information to meet DOE needs. However, a final SF–269 or SF–269A shall be required at the completion of the project when the SF–270 is used only for advances.

(ii) The terms and conditions of award shall prescribe whether the report shall be on a cash or accrual basis. DOE may require accrual reporting only if such reporting is required by program statute or rule. If the award requires accrual information and the recipient's accounting records are not normally kept on the accrual basis, the recipient shall not be required to convert its accounting system, but shall develop such accrual information through best estimates based on an analysis of the documentation on hand.

(iii) DOE shall determine the frequency of the Financial Status Report for each project or program, considering the size and complexity of the particular project or program. However, the report shall not be required more frequently

than quarterly or less frequently than annually. A final report shall be required at the completion of the agreement.

(iv) DOE shall require recipients to submit the SF–269 or SF–269A (an original and no more than two copies) no later than 30 days after the end of each specified reporting period for quarterly and semi-annual reports, and 90 calendar days for annual and final reports. Extensions of reporting due dates may be approved by the DOE upon request of the recipient.

(2) SF–272, Report of Federal Cash Transactions.

(i) When funds are advanced, each recipient shall submit the SF–272 and, when necessary, its continuation sheet, SF–272a. DOE will use this report to monitor cash advanced to recipients and to obtain disbursement information for each agreement with the recipients.

(ii) Recipients shall forecast Federal cash requirements in the "Remarks" section of the report.

(iii) When practical and deemed necessary, DOE may require recipients to report in the "Remarks" section the amount of cash advances received in excess of three days. Recipients shall provide short narrative explanations of actions taken to reduce the excess balances.

(iv) Recipients shall be required to submit not more than the original and two copies of the SF–272 15 calendar days following the end of each quarter. DOE may require a monthly report from those recipients receiving advances totaling $1 million or more per year.

(v) DOE may waive the requirement for submission of the SF–272 for any one of the following reasons:

(A) When monthly advances do not exceed $25,000 per recipient, provided that such advances are monitored through other forms contained in this section;

(B) If, in the contracting officer's opinion, the recipient's accounting controls are adequate to minimize excessive Federal advances; or,

(C) When electronic payment mechanisms provide adequate data.

(b) When DOE needs additional information or more frequent reports, the following shall be observed:

(1) When additional information is needed to comply with legislative requirements, DOE shall issue instructions to require recipients to submit such information under the "Remarks" section of the reports.

(2) When DOE determines that a recipient's accounting system does not meet the standards in Section 600.121, additional pertinent information to further monitor awards may be obtained upon written notice to the recipient until such time as the system is brought up to standard. DOE, in obtaining this information, shall comply with report clearance requirements of 5 CFR Part 1320.

(3) Contracting officers are encouraged to shade out any line item on any report if not necessary.

(4) DOE may accept the identical information from the recipients in machine readable format or computer printouts or electronic outputs in lieu of prescribed formats.

(5) Computer or electronic outputs may be provided to recipients when that expedites or contributes to the accuracy of reporting.

§ 600.153 Retention and access requirements for records.

(a) This section sets forth requirements for record retention and access to records for awards to recipients. DOE shall not impose any other record retention or access requirements upon recipients, unless such requirements are established in program regulations.

(b) Financial records, supporting documents, statistical records, and all other records pertinent to an award shall be retained for a period of three years from the date of submission of the final expenditure report or, for awards that are renewed quarterly or annually, from the date of the submission of the quarterly or annual financial report, as authorized by DOE. The only exceptions are the following:

(1) If any litigation, claim, or audit is started before the expiration of the 3-year period, the records shall be retained until all litigation, claims or audit findings involving the records have been resolved and final action taken.

(2) Records for real property and equipment acquired with Federal funds shall be retained for 3 years after final disposition.

(3) When records are transferred to or maintained by DOE, the 3-year retention requirement is not applicable to the recipient.

(4) Indirect cost rate proposals, cost allocations plans, and related records, for which retention requirements are specified in § 600.153(g).

(c) Copies of original records may be substituted for the original records if authorized by DOE.

(d) DOE shall request transfer of certain records to its custody from recipients when it determines that the records possess long term retention value. However, in order to avoid duplicate recordkeeping, DOE may make arrangements for recipients to retain any records that are continuously needed for joint use.

(e) DOE, the Inspector General, Comptroller General of the United States, or any of their duly authorized representatives, have the right of timely and unrestricted access to any books, documents, papers, or other records of recipients that are pertinent to the awards, in order to make audits, examinations, excerpts, transcripts and copies of such documents. This right also includes timely and reasonable access to a recipient's personnel for the purpose of interview and discussion related to such documents. The rights of access in this paragraph are not limited to the required retention period, but shall last as long as records are retained.

(f) Unless required by statute, DOE shall place no restrictions on recipients that limit public access to the records of recipients that are pertinent to an award, except when DOE can demonstrate that such records shall be kept confidential and would have been exempted from disclosure pursuant to the Freedom of Information Act (5 U.S.C. 552) if the records had belonged to DOE.

(g) Paragraphs (g)(1) and (g)(2) of this section apply to the following types of documents, and their supporting records: indirect cost rate computations or proposals, cost allocation plans, and any similar accounting computations of the rate at which a particular group of costs is chargeable (such as computer usage chargeback rates or composite fringe benefit rates).

(1) *If submitted for negotiation.* If the recipient submits to the Federal agency responsible for negotiating the recipient's indirect cost rate or the subrecipient submits to the recipient the proposal, plan, or other computation to form the basis for negotiation of the rate, then the 3-year retention period for its supporting records starts on the date of such submission.

(2) *If not submitted for negotiation.* If the recipient is not required to submit to the cognizant Federal agency or the subrecipient is not required to submit to the recipient the proposal, plan, or other computation for negotiation purposes, then the 3-year retention period for the proposal, plan, or other computation and its supporting records starts at the end of the fiscal year (or other accounting period) covered by the proposal, plan, or other computation.

(h) If, by the terms and conditions of the award, the recipient or subrecipient—

(1) Is accountable for program income earned or received after the end of the project period or after the termination of an award or subaward, or

(2) If program income earned during the project period is required to be applied to costs incurred after the end of the project period or after termination of an award or subaward, the record retention period shall start on the last day of the recipient's or subrecipient's fiscal year in which such income was earned or received or such costs were incurred. All other program income records shall be retained in accordance with § 600.153(b).

Termination and Enforcement

§ 600.160 Purpose of termination and enforcement.

Sections 600.161 and 600.162 set forth uniform suspension, termination and enforcement procedures.

§ 600.161 Termination.

(a) Awards may be terminated in whole or in part only if paragraph (a)(1), (2) or (3) of this section apply.

(1) By DOE, if a recipient materially fails to comply with the terms and conditions of an award.

(2) By DOE with the consent of the recipient, in which case the two parties shall agree upon the termination conditions, including the effective date and, in the case of partial termination, the portion to be terminated.

(3) By the recipient upon sending to DOE written notification setting forth the reasons for such termination, the effective date, and, in the case of partial termination, the portion to be terminated. However, if DOE determines in the case of partial termination that the reduced or modified portion of the award will not accomplish the purposes for which the award was made, it may terminate the award in its entirety under either paragraph (a)(1) or (2) of this section.

(b) If costs are allowed under an award, the responsibilities of the recipient referred to in Section 600.171(a), including those for property management as applicable, shall be considered in the termination of the award, and provision shall be made for continuing responsibilities of the recipient after termination, as appropriate.

§ 600.162 Enforcement.

(a) Remedies for noncompliance. If a recipient materially fails to comply with the terms and conditions of an award, whether stated in a Federal statute, regulation, assurance, application, or notice of award, DOE may, in addition to imposing any of the special conditions outlined in § 600.114, take one or more of the following actions, as appropriate in the circumstances.

(1) Temporarily withhold cash payments pending correction of the deficiency by the recipient or more severe enforcement action by DOE.

(2) Disallow (that is, deny both use of funds and any applicable matching credit for) all or part of the cost of the activity or action not in compliance.

(3) Wholly or partly suspend or terminate the current award.

(4) Withhold further awards for the project or program.

(5) Take other remedies that may be legally available.

(b) Hearings and appeals. In taking an enforcement action, DOE shall provide the recipient an opportunity for hearing, appeal, or other administrative proceeding to which the recipient is entitled under any statute or regulation applicable to the action involved.

(c) Effects of suspension and termination. Costs of a recipient resulting from obligations incurred by the recipient during a suspension or after termination of an award are not allowable unless the awarding agency expressly authorizes them in the notice of suspension or termination or subsequently. Other recipient costs during suspension or after termination which are necessary and not reasonably avoidable are allowable if paragraph (c)(1) and (2) of this section apply.

(1) The costs result from obligations which were properly incurred by the recipient before the effective date of suspension or termination, are not in anticipation of it, and in the case of a termination, are noncancellable.

(2) The costs would be allowable if the award were not suspended or expired normally at the end of the funding period in which the termination takes effect.

(d) Relationship to debarment and suspension. The enforcement remedies identified in this section, including suspension and termination, do not preclude a recipient from being subject to debarment and suspension under 10 CFR part 1036.

After-the-Award Requirements

§ 600.170 Purpose.

Sections 600.171 through 600.173 contain closeout procedures and other procedures for subsequent disallowances and adjustments.

§ 600.171 Closeout procedures.

(a) Recipients shall submit, within 90 calendar days after the date of completion of the award, all financial, performance, and other reports as required by the terms and conditions of the award. DOE may approve extensions when requested by the recipient.

(b) Unless DOE authorizes an extension, a recipient shall liquidate all obligations incurred under the award not later than 90 calendar days after the funding period or the date of completion as specified in the terms and conditions of the award or in agency implementing instructions.

(c) DOE shall make prompt payments to a recipient for allowable reimbursable costs under the award being closed out.

(d) The recipient shall promptly refund any balances of unobligated cash that DOE has advanced or paid and that is not authorized to be retained by the recipient for use in other projects. OMB Circular A–129 governs unreturned amounts that become delinquent debts.

(e) When authorized by the terms and conditions of the award, DOE shall make a settlement for any upward or downward adjustments to the Federal share of costs after closeout reports are received.

(f) The recipient shall account for any real and personal property acquired with Federal funds or received from the Federal Government in accordance with §§ 600.131 through 600.137.

(g) In the event a final audit has not been performed prior to the closeout of an award, DOE shall retain the right to recover an appropriate amount after fully considering the recommendations on disallowed costs resulting from the final audit.

§ 600.172 Subsequent adjustments and continuing responsibilities.

(a) The closeout of an award does not affect any of the following.

(1) The right of DOE to disallow costs and recover funds on the basis of a later audit or other review.

(2) The obligation of the recipient to return any funds due as a result of later refunds, corrections, or other transactions.

(3) Audit requirements in § 600.126.

(4) Property management requirements in §§ 600.131 through 600.137.

(5) Records retention as required in § 600.153.

(b) After closeout of an award, a relationship created under an award may be modified or ended in whole or in part with the consent of DOE and the recipient, provided the responsibilities of the recipient referred to in paragraph 600.173(a), including those for property management as applicable, are considered and provisions made for continuing responsibilities of the recipient, as appropriate.

§ 600.173 Collection of amounts due.

(a) Any funds paid to a recipient in excess of the amount to which the

recipient is finally determined to be entitled under the terms and conditions of the award constitute a debt to the Federal Government. If not paid within a reasonable period after the demand for payment, DOE may reduce the debt by paragraph (a) (1), (2) or (3) of this section.

(1) Making an administrative offset against other requests for reimbursements.

(2) Withholding advance payments otherwise due to the recipient.

(3) Taking other action permitted by statute.

(b) Except as otherwise provided by law, DOE shall charge interest on an overdue debt in accordance with 4 CFR Chapter II, "Federal Claims Collection Standards."

Additional Provisions

§ 600.180 Purpose.

The purpose of "Additional Provisions" is to provide additional rules for certain types of recipients which are otherwise covered by 10 CFR Part 600, Subpart B when they are performing under Small Business Innovation Research grants.

§ 600.181 Special provisions for small business innovation research grants.

(a) *General.* This section contains provisions applicable to the Small Business Innovation Research (SBIR) Program. This codifies six class deviations pertaining to the SBIR program.

(b) *Provisions Applicable to Phase I SBIR Awards.* Phase I SBIR awards may be made on a fixed obligation basis, subject to the following requirements:

(1) While proposed costs must be analyzed in detail to ensure consistency with applicable cost principles, incurred costs are not subject to regulation by the standards of cost allowability;

(2) Although detailed budgets are submitted by a recipient and reviewed by DOE for purposes of establishing the amount to be awarded, budget categories are not stipulated in making an award;

(3) Prior approval from the DOE for rebudgeting among categories by the recipient is not required. Prior approval from DOE is required for situations involving sole source or single bid procurements as provided in § 600.181(d)(2). Prior approval from DOE is also required for any variation from the requirement under the SBIR program that no more than one-third of Phase I work can be done by sub-contractors or consortium partners;

(4) Pre-award expenditure approval is not required;

(5) Payments are to be made in the same manner as other financial assistance (see § 600.122), except that, when determined appropriate by the cognizant program official and contracting officer, a lump sum payment may be made. If a lump sum payment is made, the award must be conditioned to require the recipient to return to DOE amounts remaining unexpended at the end of the project if those amounts exceed $500;

(6) Recipients will certify in writing to the Contracting Officer at the end of the project that the activity was completed or the level of effort was expended. Should the activity or effort not be carried out, the recipient would be expected to make appropriate reimbursements;

(7) Requirements for periodic reports may be established for each award so long as they are consistent with § 600.151;

(8) Changes in principal investigator or project leader, scope of effort, or institution, require the prior approval of DOE.

(c) Provision Applicable to Phase II SBIR Awards. Phase II SBIR awards may be made for a single budget period of 24 months.

(d) Provisions Applicable to Phase I and Phase II SBIR Awards.

(1) The prior approval of the cognizant DOE Contracting Officer is required before the final budget period of the project period may be extended without additional funds.

(2) A recipient or subrecipient must receive the prior written approval of the awarding party before entering into any sole source contract or a contract where only one bid or proposal is received when the value of the contract is expected to exceed $25,000 in the aggregate.

(3) A fee or profit may be paid to SBIR recipients.

Appendix A to Subpart B to Part 600—Contract Provisions

All contracts, awarded by a recipient including small purchases, shall contain the following provisions as applicable:

1. *Equal Employment Opportunity*—All contracts shall contain a provision requiring compliance with E.O. 11246, "Equal Employment Opportunity," as amended by E.O. 11375, "Amending Executive Order 11246 Relating to Equal Employment Opportunity," and as supplemented by regulations at 41 CFR Part 60, "Office of Federal Contract Compliance Programs, Equal Employment Opportunity, Department of Labor."

2. *Copeland "Anti-Kickback" Act (18 U.S.C. 874 and 40 U.S.C. 276c)*—All contracts and subgrants in excess of $2000 for construction or repair awarded by recipients and subrecipients shall include a provision for compliance with the Copeland "Anti-Kickback" Act (18 U.S.C. 874), as supplemented by Department of Labor regulations (29 CFR Part 3, "Contractors and Subcontractors on Public Building or Public Work Financed in Whole or in Part by Loans or Grants from the United States"). The Act provides that each contractor or subrecipient shall be prohibited from inducing, by any means, any person employed in the construction, completion, or repair of public work, to give up any part of the compensation to which he is otherwise entitled. The recipient shall report all suspected or reported violations to the Federal awarding agency.

3. *Davis-Bacon Act, as amended (40 U.S.C. 276a to a-7)*—When required by Federal program legislation, all construction contracts awarded by the recipients and subrecipients of more than $2000 shall include a provision for compliance with the Davis-Bacon Act (40 U.S.C. 276a to a-7) and as supplemented by Department of Labor regulations (29 CFR Part 5, "Labor Standards Provisions Applicable to Contracts Governing Federally Financed and Assisted Construction"). Under this Act, contractors shall be required to pay wages to laborers and mechanics at a rate not less than the minimum wages specified in a wage determination made by the Secretary of Labor. In addition, contractors shall be required to pay wages not less than once a week. The recipient shall place a copy of the current prevailing wage determination issued by the Department of Labor in each solicitation and the award of a contract shall be conditioned upon the acceptance of the wage determination. The recipient shall report all suspected or reported violations to the Federal awarding agency.

4. *Contract Work Hours and Safety Standards Act (40 U.S.C. 327–333)*—Where applicable, all contracts awarded by recipients in excess of $2000 for construction contracts and in excess of $2500 for other contracts that involve the employment of mechanics or laborers shall include a provision for compliance with Sections 102 and 107 of the Contract Work Hours and Safety Standards Act (40 U.S.C. 327–333), as supplemented by Department of Labor regulations (29 CFR Part 5). Under Section 102 of the Act, each contractor shall be required to compute the wages of every mechanic and laborer on the basis of a standard work week of 40 hours. Work in excess of the standard work week is permissible provided that the worker is compensated at a rate of not less than 1½ times the basic rate of pay for all hours worked in excess of 40 hours in the work week. Section 107 of the Act is applicable to construction work and provides that no laborer or mechanic shall be required to work in surroundings or under working conditions which are unsanitary, hazardous or dangerous. These requirements do not apply to the purchases of supplies or materials or articles ordinarily available on the open market, or contracts for transportation or transmission of intelligence.

5. *Rights to Inventions Made Under a Contract or Agreement*—Contracts or agreements for the performance of

experimental, developmental, or research work shall provide for the rights of the Federal Government and the recipient in any resulting invention in accordance with 37 CFR Part 401, "Rights to Inventions Made by Nonprofit Organizations and Small Business Firms Under Government Grants, Contracts and Cooperative Agreements," and any implementing regulations issued by the awarding agency.

6. *Clean Air Act (42 U.S.C. 7401 et seq.) and the Federal Water Pollution Control Act (33 U.S.C. 1251 et seq.), as amended*—Contracts and subgrants of amounts in excess of $100,000 shall contain a provision that requires the recipient to agree to comply with all applicable standards, orders or regulations issued pursuant to the Clean Air Act (42 U.S.C. 7401 et seq.) and the Federal Water Pollution Control Act as amended (33 U.S.C. 1251 et seq.). Violations shall be reported to the Federal awarding agency and the Regional Office of the Environmental Protection Agency (EPA).

7. *Byrd Anti-Lobbying Amendment (31 U.S.C. 1352)*—Contractors who apply or bid for an award of $100,000 or more shall file the required certification. Each tier certifies to the tier above that it will not and has not used Federal appropriated funds to pay any person or organization for influencing or attempting to influence an officer or employee of any agency, a member of Congress, officer or employee of Congress, or an employee of a member of Congress in connection with obtaining any Federal contract, grant or any other award covered by 31 U.S.C. 1352. Each tier shall also disclose any lobbying with non-Federal funds that takes place in connection with obtaining any Federal award. Such disclosures are forwarded from tier to tier up to the recipient.

8. *Debarment and Suspension (E.O.s 12549 and 12689)*—Contract awards that exceed the small purchase threshold and certain other contract awards shall not be made to parties listed on the nonprocurement portion of the General Services Administration's List of Parties Excluded from Federal Procurement or Nonprocurement Programs in accordance with E.O.s 12549 and 12689, "Debarment and Suspension." This list contains the names of parties debarred, suspended, or otherwise excluded by agencies, and contractors declared ineligible under statutory or regulatory authority other than E.O. 12549. Contractors with awards that exceed the small purchase threshold shall provide the required certification regarding its exclusion status and that of its principals.

[FR Doc. 94–25750 Filed 10–20–94; 8:45 am]

BILLING CODE 6450–01–P

federal register

Friday
October 21, 1994

Part IV

Department of Transportation

Coast Guard

33 CFR Part 155 et al.
Overfill Devices; Interim Final Rule

DEPARTMENT OF TRANSPORTATION

Coast Guard

33 CFR Parts 155 and 156

[CGD 90-071a]

RIN 2115-AD87

Overfill Devices

AGENCY: Coast Guard, DOT.

ACTION: Interim final rule.

SUMMARY: The Coast Guard is issuing an interim final rule (IFR) that establishes minimum standards for overfill devices and requires the phased-in installation and use of devices on the cargo tanks of certain tank vessels that carry oil or oil residue as primary cargo. Regulations addressing minimum standards for and concerning the use of overfill devices are required by the Oil Pollution Act of 1990 (OPA 90). The purpose of the interim regulations is to reduce the likelihood of spills when oil is loaded as cargo.

DATES: The interim final rule is effective on January 19, 1995. Comments must be received by January 19, 1995.

ADDRESSES: Comments may be mailed to the Executive Secretary, Marine Safety Council (G–LRA/3406) (CGD 90–071a), U.S. Coast Guard Headquarters, 2100 Second Street SW., Washington, DC 20593–0001 or may be delivered to room 3406 at the same address between 8 a.m. and 3 p.m., Monday through Friday, except Federal holidays. The telephone number is (202) 267–1477. Comments on collection-of-information requirements must be mailed also to the Office of Information and Regulatory Affairs, Office of Management and Budget, 725 17th Street NW., Washington, DC 20503, ATTN: Desk Officer, U.S. Coast Guard.

The Executive Secretary maintains the public docket for the rulemaking. Comments will become part of this docket and will be available for inspection or copying at room 3406, U.S. Coast Guard Headquarters, between 8:00 a.m. and 3:00 p.m., Monday through Friday, except Federal holidays.

FOR FURTHER INFORMATION CONTACT: LCDR Jeff Brager, Office of Marine Safety, Security and Environmental Protection (G–MVI–1), (202) 267–1046.

SUPPLEMENTARY INFORMATION:

Request for Comments

The Coast Guard encourages interested persons to participate in the rulemaking by submitting written data, views, or arguments. Persons submitting comments should include their names and addresses, identify the rulemaking (CGD 90–071a) and the specific section of this rule to which each comment applies, and give the reason for each comment. Please submit two copies of all comments and attachments in an unbound format, no larger than 8 by 11 inches, suitable for copying and electronic filing. Persons wanting acknowledgment of receipt of comments should enclose a stamped, self-addressed postcard or envelope.

The Coast Guard will consider all comments received during the comment period. It may change this rule in view of the comments.

Drafting Information

The principal persons involved in drafting this document are Randall Crenwelge, Project Manager, and Pamela Pelcovits, Project Counsel, OPA 90 Staff.

Regulatory History

Section 4110 of the Oil Pollution Act of 1990 (OPA 90) (Pub. L. 101–380) adds a statutory note following 46 U.S.C. 3703 requiring, in part, the establishment of minimum standards for overfill warning devices and requirements concerning the use of overfill devices on certain tank vessels.

To meet the statutory requirements, the Coast Guard published a notice of proposed rulemaking (NPRM) entitled, "Overfill Devices," in the **Federal Register** (58 FR 4040; January 12, 1993). The Coast Guard received 32 letters commenting on the proposal.

In response to some comments, the Coast Guard published a notice (58 FR 54315; October 21, 1993) and held a public meeting at U.S. Coast Guard Headquarters on November 17, 1993. Twenty-eight people attended the meeting, and a list of the attendees and audio tapes of the meeting are available in the public docket for the rulemaking (CGD 90–071a) at the address listed under ADDRESSES. Statements made at the meeting have been treated like written comments in the preamble.

Background and Purpose

Detailed information on overfill spills and devices is found in the preamble to the NPRM.

An overfill spill occurs when too much oil is pumped or gravitated into a cargo tank during a transfer operation (e.g., from a facility to a tank vessel or from one tank vessel to another). Human error is the most often reported cause of this type of spill. Many overfill spills are small; however, some reported overfill spills have involved large quantities of oil.

Coast Guard regulations require vessel owners and operators to follow pollution prevention procedures during oil transfer operations (33 CFR parts 155 and 156). Existing regulations do not require devices on cargo tanks to detect and warn of impending overfills.

Discussion of Comments and Changes

Location of Regulations

One comment objected to the proposed placement of the regulations in 33 CFR subchapter O as too cumbersome and confusing due to cross references, applicability sections, exceptions, and definitions. The comment recommended a comprehensive reorganization of the regulations based on statutory authorities. A reorganization of 33 CFR subchapter O is outside the scope of the rulemaking; however, the interim regulations amending 33 CFR subchapter O have been drafted to be as clear and concise as possible.

Applicability

In the NPRM, the Coast Guard proposed requiring overfill devices on tank vessels with a cargo capacity of more than 40 cubic meters (M^3) (approximately 250 barrels, 1 barrel = 42 U.S. gallons). One comment suggested that the threshold was inappropriate and that additional "small vessels" should be excluded from the regulations. The comment stated that current oil transfer procedure requirements found in 33 CFR parts 155 and 156 are adequate to prevent overflow spills from smaller tank vessels because these vessels have simple oil transfer systems. The comment also stated that the cost of installing and maintaining overfill devices would be a significant financial burden to the company submitting the comment.

The Coast Guard reviewed spill data from tank vessels for the years 1989, 1990, and 1991 and found that tank overflow spills occurred infrequently aboard vessels with cargo carrying capacities of less than 1,000 M^3 (approximately 6,290 barrels). Specifically, a total of 279 cargo tank overflow spills were recorded during the 3-year period. Of those overfill spills, 215 cargo tank overflow incidents occurred from tank barges. Only four of the 215 overflows were from barges with a cargo capacity of less than 1,000 M^3, resulting in 0.6 M^3 (159 gallons) oil spilled. During the same period, 64 similar incidents occurred aboard tankships. Of these incidents, only two occurred from tankships with a cargo capacity of less than 1,000 M^3, resulting in 0.4 M^3(106 gals) oil spilled.

In response to this comment and its review of available data, the Coast Guard has raised the applicability threshold in § 155.480(a) to a cargo capacity of 1,000 M^3. The Coast Guard requests comments concerning this change. The data on which the Coast Guard made its decision is available in the docket for review.

One comment specified that the phase-in requirements proposed in 33 CFR 155.480(c) did not cover Canadian tank barges because they are not subject to the requirements of the Safety of Life at Sea (SOLAS) and the International Load Line Conventions. The Coast Guard did not intend for Canadian barges which operate in U.S. waters to be treated differently from U.S. flag barges under the regulations. The Coast Guard expects that overfill devices will be installed on such Canadian tank barges at their next scheduled drydocking or internal tank examination.

One comment recommended that tank vessels required to be equipped with double hulls within the next 5 years under the double hull requirements of OPA 90 should be excluded from the overfill device requirements. The comment contends that many of these vessels will be phased out of service in 5 years and that the costs of upgrading overfill devices on these vessels would not be recovered within 5 years. The Coast Guard agrees and has added § 155.480(e) to reflect the exemption of vessels that under 46 U.S.C. 3703a(c) can not operate on the navigable waters or Exclusive Economic Zone of the United States after the year 2000, unless equipped with a double hull.

One comment requested that the regulations not apply to open-hopper barges which are limited to carrying non-hazardous oil-field waste material. Because such cargo operations are not covered by 33 CFR parts 155 and 156, the requirements for overfill devices do not apply to these barges.

One comment at the public meeting requested that the regulations not apply to tank vessels which carry only asphalt. Participants at the public meeting noted that because of the density of asphalt, vessels carrying this product are usually not fully loaded. Also, the participants reported no overfill spills from asphalt carriers. Currently, technology is not available to provide a cost-effective means of overfill detection for asphalt carriers. Therefore, the Coast Guard has decided to exempt tank vessels that are dedicated to carrying asphalt as cargo from the overfill device requirements. This change is reflected in § 155.480(f). The Coast Guard requests comments concerning the exemption of tank vessels carrying asphalt from this interim rulemaking.

One comment asked the Coast Guard to require overfill devices to be activated during all types of cargo transfers, including internal transfers from tank to tank and cargo discharges. Although overfill incidents do occur during internal cargo transfers and discharges, these incidents are infrequent and do not result in large spills into the water. Tank vessel owners and operators are encouraged to use overfill devices for all transfer operations, but the regulations continue to apply only during loading.

Two comments asked that the regulations not apply to deck tanks used to store barge generator and pump fuel, or oil slops. The regulations only require installation of overfill devices on cargo tanks. Deck tanks used for slops and barge generator and pump fuel are not covered by the regulations.

Seven comments stated that high viscosity oils prevent overfill devices from functioning properly. The Coast Guard finds that heavy oils are just as likely to overflow from cargo tanks as lower viscosity oils. Vessel owners and operators must choose overfill devices best suited for the oil they carry and, in accordance with 33 CFR 155.750(e)(2), 46 CFR 39.20–7(b)(3), and 46 CFR 39.20–9(b)(3), they must test their equipment prior to each cargo loading. If a method of overfill detection is not technologically available for a particular type of high temperature service oil, such as Number 6 oil, the owner or operator of a vessel, on a case by case basis, may request an alternative means of compliance in accordance with 33 CFR 155.120(c) of this regulation. The Coast Guard requests comments concerning the application of alternative means of compliance with the interim regulations for vessels carrying high temperature service oils.

One State agency requested that the Coast Guard require overfill devices on vessels which carry non-petroleum oils as cargo. A barge company submitted a comment recommending the continued exclusion of vessels carrying non-petroleum oil cargoes. In the NPRM, the Coast Guard explained that it is interested in addressing overfill spills of MARPOL Annex I oils because these products represent the most significant risk. They are the most frequently transported cargoes with the greatest volume transported and spilled. Non-petroleum oils are not MARPOL Annex I oils. The Coast Guard may extend the regulations to additional oils in the future, but for now will not impose overfill device regulations on tank vessels which exclusively carry non-petroleum oils.

In accordance with 33 CFR 155.1015, this rule does not apply to foreign tank vessels engaged in innocent passage in the territorial sea. These vessels do not engage in cargo loading operations in U.S. waters and, therefore, the Coast Guard is not exercising jurisdiction over these vessels for this interim rulemaking.

Minimum Standards for Overfill Devices: Tankers

One comment from an industry association recommended that only one overfill alarm instead of two, as proposed in the NPRM, should be required in each tank. The comment argued that the standards for vapor recovery equipment should not be applied automatically to overfill devices because of the particular nature of vapor recovery. For vapor recovery systems, the potential for cargo tank overpressure and rupturing of vapor recovery piping dictated a two-alarm system. The Coast Guard agrees that one overfill alarm per cargo tank is sufficient and § 155.480 has been revised to reflect this. This change also applies to cargo tanks with closed loading systems.

Minimum Standards For Overfill Devices: Barges

Much of the discussion in the NPRM concerning standards for overfill devices dealt with barges. Twelve comments responded to the question posed in the NPRM on whether a high level indicating device, such as a stick gauge, would be an adequate overfill warning device on a barge. Six comments, all from the barge industry, favored the use of stick gauges.

At the public meeting, representatives from the barge industry stated that most barges currently have no overfill devices. In most cases, the level of liquid in a barge is determined by the use of sounding tapes, ullage measuring devices, or inspection ports. Several participants at the meeting expressed the view that adding an overfill alarm system for each tank would be extremely expensive for barge owners and operators. Barge owners and operators currently using stick gauges as well as the vapor recovery systems would incur significant costs if an additional alarm system were required.

Barge industry representatives contended that the visual signal provided by high level indicating devices is, in some ways, superior to the audible signal provided by overfill alarms, which only sound when an overfill is about to occur. High level indicating devices, when properly

installed and utilized, provide the person-in-charge (PIC) of the loading operation with a continuous reading of how the later stages of the loading operation are progressing.

The Coast Guard will allow the owners and operators of tank barges to select one of three alternatives: (1) an overfill alarm on each tank which includes circuitry to sufficiently identify which individual tanks overfill system is alarming, (2) an automatic shutdown system for the entire barge and transfer facility, or (3) a high level indicating device installed on each tank, such as a stick gauge.

Two of the comments also recommended that the Coast Guard allow portable stick gauges, which would be moved from tank to tank, as the tanks were sequentially topped off. This recommendation assumes that tanks will always be sequentially topped off, which may not be the case. Accordingly, the Coast Guard will require that when stick gauges are used, they must be permanently installed on each tank.

Six comments stated that a stick gauge was inadequate to warn of an imminent spill when the PIC was off the barge or performing other duties. These comments favored alarms and automatic shutdown systems. However, the Coast Guard finds that audible alarms are just as ineffective as stick gauges if the PIC is not in the immediate vicinity of the transfer operation.

The Coast Guard encourages the use of systems which automatically shut down the transfer pumps before an overfill spill occurs; however, the Coast Guard does not require these systems to be used, for several reasons. The requirement would be cost-prohibitive for some owners and operators; it would require additional maintenance; and extra people would be needed to perform this maintenance. Additionally, industry standards for the necessary shoreside and barge interface would need to be developed. Developing these standards would be time-consuming.

Over the next 5 years, the Coast Guard will monitor the effectiveness of high level indicating devices. If at the end of this period, the Coast Guard determines that the overfill spill record of tank barges equipped with these devices is not essentially as good or better than the overfill spill record of other tank vessels covered by the regulations, the Coast Guard may remove the provision in the regulation allowing use of high level indicating devices as substitutes for overfill alarms.

Two comments recommended requiring only one overfill alarm on a tank instead of two as required by the NPRM, because only one alarm is needed to alert the PIC to act to prevent an overfill. The Coast Guard has decided to allow as an option, the use of one high level indicating alarm or one alarm with an independent visual or audible device installed on each tank, which must function as an overfill device for each tank on a tank barge. Its purpose is to warn the PIC that immediate action must be taken to prevent a tank overfill and oil spill during loading operations. Section 155.480 has been revised to reflect this.

Some comments recommended technical specifications for the overfill devices. Presently, the Coast Guard does not find a need to develop technical specifications for overfill devices. Many of the devices that meet the requirements of the regulations are already in service as high level indicating devices aboard tank vessels. The Coast Guard finds that cross referencing its performance criteria to those provided in the vapor control regulations is the most efficient manner of setting these regulatory requirements. Vessel owners and operators should utilize devices which conform to the flag state or classification society inspection criteria and are most suitable for their vessels' operating environments.

Training

Four comments stated that trained, professional tankermen are essential on board tank barges to prevent oil spills, and that the Coast Guard should establish requirements to improve PIC performance rather than require new equipment. One comment stated that only qualified people who have received proper training should be allowed to use the required overfill warning devices. The Coast Guard strongly encourages owners, operators, and tankermen's services to provide complete and adequate training in the proper use of high level indicating devices, but the setting of training requirements exceeds the scope of this rulemaking.

Another comment stated that tankermen on unmanned barges may not be as familiar with the barge as tankermen on manned barges. Tankermen on a manned barge are often assigned to that barge on a long-term basis. They become intimately familiar with their barges; whereas, tankermen on unmanned barges are temporarily assigned to a barge only for a loading or unloading operation. Regardless of whether a barge is manned or unmanned, it is the duty of the tankerman to conduct safe and pollution-free transfer operations.

At this time, the Coast Guard regulations in 33 CFR 156.120 do not require specific training for the PIC to perform an oil transfer operation; however, each individual is required to meet the qualifications for a PIC found in 33 CFR 155.710, and each vessel owner and operator must keep a list with names of each person currently designated as PIC for transfer operations.

While the Coast Guard agrees that the competency and training of tankermen is crucial to spill prevention, it finds that additional specific training requirements are not appropriate for this rulemaking; however, changes to these requirements have been proposed in a separate rulemaking (54 FR 42624; October 17, 1989).

Inspection

One comment recommended that all equipment should be subject to an annual inspection. Overfill devices will be subject to examination during the annual tank vessel examination for foreign flag vessels or the inspection for certification and reinspections of U.S. flag vessels and Canadian tank barges. In addition, 33 CFR 156.120 requires the PIC of an oil transfer operation to test each overfill device for proper operation prior to each transfer of cargo.

Phase-In

Two comments from tank barge operators expressed support for the timetable for phasing in the installation of each overfill device at regularly scheduled cargo tank internal examinations.

One comment recommended a 2-year time limit for installations on barges. The Coast Guard considered accelerating the phase-in period but decided that the costs associated with gas-freeing a vessel and taking the vessel out of service would be prohibitive.

Another comment asked if a grace period for overfill device inspection would be granted for vessels undergoing a cargo tank internal examination immediately after the effective date of the regulations. The effective date of the regulations is 90 days after publication in the **Federal Register**. The Coast Guard expects that vessel repairs or cargo tank internal examinations can be completed within 90 days. Therefore, vessels which are being repaired or examined would not be subject to these regulations until, as in the case of a U.S. flag vessel, the vessel's next cargo tank internal examination.

Tank Level and Pressure Monitoring Devices

One comment suggested that this rulemaking be combined with standards for equipment detecting leaks in cargo tanks also required under section 4110 of OPA 90 (CGD 90–071). The Coast Guard disagrees. Overfill devices are used to detect overfills while transferring, discharging, or loading cargo. They have a completely different function when compared with tank level or pressure monitoring devices which serve to detect leaks in cargo tanks.

Maximum Cargo Level of Oil

Two vessel operators objected to limiting the amount of cargo in a cargo tank to 98.5 percent of the cargo tank volume. The Coast Guard has not changed the requirement in the interim regulations. Both the vapor control system regulations (46 CFR 39.30–1(e)) and these regulations reflect the Coast Guard's position that filling a tank more than 98.5 percent poses too high of a risk that there will be a tank overflow. Therefore, the rule continues to establish a 98.5 percent level as the maximum level of fill. This rule has been revised to be consistent with the rules for vapor control systems, to specify that a tank may not be filled higher than either 98.5 percent or the level at which the overfill alarms are set, for those cases where shutdown must be initiated at a level below 98.5 percent to ensure that an overfill does not occur.

Assessment

This rule is a significant regulatory action under section 3(f) of Executive Order 12866 and has been reviewed by the Office of Management and Budget under that order. It is significant under the "Department of Transportation Regulatory Policies and Procedures" (44 FR 11040; February 26, 1979). Although it does not require an assessment of costs and benefits under section 6(a)(3) of Executive Order 12866, an assessment has been prepared and is available in the docket for inspection or copying where indicated under "ADDRESSES." The Assessment is summarized as follows.

The Coast Guard assumes that tankship and tank barge owners and operators will purchase one high quality, float-type overfill device for each cargo tank. The Coast Guard also assumes that 25 percent of all vessels covered by this rulemaking already have some acceptable form of overfill device installed. Costs for the purchase and installation of the single alarm system required on the remaining tankships are estimated at $3,125 per tank, or $43,750 for a tankship with 14 cargo tanks. Costs for the purchase and installation of the high level indicating system required on the remaining tank barges are estimated at $1,650 per tank, or $13,200 for a tank barge with eight cargo tanks.

The total cost of overfill devices to the industry is calculated first by estimating cost by vessel type and use for an average size vessel, and then by aggregating the costs for all vessels engaged in the trade. The analysis includes self-propelled and non-self-propelled tank vessels. Total costs, including present value costs, are estimated separately by vessel type, use, flag, and route.

Assuming a 5-year life for alarm devices and a 15-year life for high level indicating devices, the present value cost of compliance through 2015 to tank vessel owners and operators is projected to range between $103.1 million and $113 million, distributed as follows: (1) to U.S. tank barges and tankships (commercial or privately owned), $51.8 million; (2) to foreign flag tankships, $49.2 to $59.1 million; and (3) to U.S. Government tankships, $2.1 million. The present value of the cost of compliance to the U.S. is $53.9 million through the scope of this analysis (2015). The regulation will affect approximately 1,615 inland and coastal barges, 147 U.S. flag (commercial or privately owned) tankships, 375–450 foreign flag tankships, and 23 U.S. Navy and U.S. Maritime Administration (MARAD) vessels. Enforcement costs to the Federal Government are estimated at $785,000 per year.

The analysis indicates that if the entire cost of the implementation of the regulation were passed on to consumers, the retail price of domestically consumed petroleum products would increase approximately .019 dollars per ton or .000007 dollars per gallon; and the retail price of U.S. petroleum products in export markets would rise by approximately .112 dollars per ton or .0004 dollars per gallon. Export markets will be impacted more heavily because 48 million tons of oil are exported every year versus 850 million tons of oil transported per year in domestic markets.

According to Coast Guard records, approximately 73,000 gallons of oil and petroleum products were spilled in U.S. waters from cargo tank overflows in 1989. The Coast Guard hopes that this regulation will prevent 100 percent of these oil spills or save approximately 73,000 gallons of oil from spilling per year. Nevertheless, it is expected that some failures will occur. For comparison, four models are presented: one in which it is assumed high level indicating devices are 60 percent effective and alarms are 80 percent effective (60%–80%); and one on which stick gauges are 80 percent effective and alarms are 100 percent effective (80%–100%). Each of these models is presented in two cases, Case I and II. Case I assumes that there are 500 applicable foreign vessels, Case II assumes 600.

The present value of the quantified direct benefits from the installation of overfill warning devices on tankships and tank barges is 634,021 gallons of oil not spilled, assuming a 60%–80% model, calculated through 2015 and at a 7 percent discount rate. Assuming an 80%–100% model, benefits increase to 836,489 gallons of oil not spilled.

The RA estimates four cost-benefit ratios for this rulemaking, depending on case (Case I or II) and effectiveness (60%–80% or 80%–100%). The ratios are defined in terms of "net present value," which is the "present value" of costs ($117.1 to $127 million) per "present value" of benefits (634,021 to 836,489 gallons of oil not spilled). The cost to benefit ratio for tankships and tank barges is between $140 and $200 per gallon of oil not spilled for this rulemaking. In other words, the rulemaking results in a cost of $140 to $200 to prevent the spillage of 1 gallon of oil.

One comment stated that the benefits of other rules need to be reassessed according to the benefits claimed from this rule. In particular, the comment stated that because this rule will reduce the number of oil spills, the benefits claimed for the rulemaking entitled, "Discharge Removal Equipment for Vessels Carrying Oil", (58 FR 67988), would be less. The comment indicated that the interrelationships of the OPA 90 rulemakings should be assessed as each rule is proposed. The Coast Guard is preparing a programmatic regulatory impact analysis (RIA) which will consider the interrelationship of all OPA 90 rulemakings, however it is considered to be impractical to re-examine this RIA in its entirety for each rulemaking. Where there are obvious and significant interrelationships, the Coast Guard has taken these factors into account.

Small Entities

Based on the comments received and to lessen the burden on small entities, the Coast Guard has revised the regulations to apply only to tank vessels with a cargo carrying capacity of more than 1,000 M^3. This covers 21 tankships and 391 tank barges which are owned and operated by small companies. They

would have been included in the rulemaking as it was originally proposed.

In addition, the Coast Guard has permitted the alternative of high level indicating devices for tank barges. This is a less expensive option and will be much less costly for the smaller entities contained within the tank barge industry. Therefore, the Coast Guard certifies under 605(b) of the Regulatory Flexibility Act (5 U.S.C. 601 *et seq.*) that this rule will not have a significant economic impact on a substantial number of small entities.

Collection of Information

This rule contains collection-of-information requirements. The Coast Guard has submitted the requirements to the Office of Management and Budget (OMB) for review under section 3504(h) of the Paperwork Reduction Act (44 U.S.C. 3501 *et seq.*), and OMB has approved them. The section numbers are §§ 155.750 (Contents of transfer procedures) and 156.150 (Declaration of inspection), and the corresponding OMB approval numbers are 2115–0120 and 2115–0506. Section 156.120 is being amended to reflect this new collection of information requirements.

Federalism

The Coast Guard has analyzed this rule under the principles and criteria contained in Executive Order 12612 and has determined that the rule does not have sufficient federalism implications to warrant the preparation of a Federalism Assessment. One comment requested that State and municipalities be allowed to adopt stricter requirements than these Federal regulations. Because tank vessels move between U.S. ports in the national marketplace and between U.S. and foreign ports in the international marketplace, standards for overfill devices should be of national scope to avoid unreasonably burdensome variations.

Environment

The Coast Guard considered the environmental impact of this rule and concluded that preparation of an Environmental Impact Statement is not necessary. An Environmental Assessment (EA) and a Finding of No Significant Impact are available in the docket for inspection or copying where indicated under **ADDRESSES.** The EA discusses the action, subsequent expected environmental impacts, and overall need for the action. These regulations are not expected to result in a significant impact on the quality of the human environment because overfills tend to result in relatively small spills. Therefore, the Coast Guard has issued a Finding of No Significant Impact which was placed in the docket for the rulemaking.

List of Subjects

33 CFR Part 155

Hazardous substances, Oil pollution, Reporting and recordkeeping requirements.

33 CFR Part 156

Hazardous substances, Oil pollution, Reporting and recordkeeping requirements, Water pollution control.

For the reasons set out in the preamble, the Coast Guard amends 33 CFR parts 155 and 156 as follows:

PART 155—OIL OR HAZARDOUS MATERIAL POLLUTION PREVENTION REGULATIONS FOR VESSELS

1. The authority citation for 33 CFR part 155 and the note following the citation are revised to read as follows:

Authority: 33 U.S.C. 1231, 1321(j)(1), 46 U.S.C. 3715; E.O. 12777, 56 FR 54757, 3 CFR, 1991 Comp., p.351; 49 CFR 1.46. Sections 155.100 through 155.130, 155.350 through 155.400, 155.430, 155.440, 155.470, and 155.1010 through 155.1070 also issued under 33 U.S.C. 1903(b). Sections 155.480, 155.750(e), and 155.775 are issued under 46 U.S.C. 2103 and section 4110, Pub. L. 101-380, 104 Stat. 515 (46 U.S.C. 3703 note).

Note: Additional requirements for vessels carrying oil or hazardous materials are contained in 46 CFR parts 30 through 36, 150, 151, and 153.

2. Section 155.110 is revised to read as follows:

§ 155.110 Definitions.

Except as specifically stated in a section, the definitions in part 151 of this chapter, except for the word "oil", and in part 154 of this chapter, apply to this part.

3. In § 155.120, paragraph (c) is added to read as follows:

§ 155.120 Equivalents.

* * * * *

(c) For tank vessels required to have overfill devices installed under parts 155 and 156 of this chapter, the Commandant may, upon receipt of a written request, allow any fitting, material, appliance, or apparatus to be fitted in a tank vessel as an alternative to the required overfill device(s) that are specified in these parts if the proposed alternative device is at least as effective as that required in the regulations.

4. Section 155.480 is added to read as follows:

§ 155.480 Overfill devices.

(a) For the purposes of this section, "oil" has the same definition as provided in § 151.05 of this chapter.

(b) Each tank vessel with a cargo capacity of 1,000 or more cubic meters (approximately 6,290 barrels), loading oil or oil residue as cargo in waters subject to the jurisdiction of the U.S. and its Exclusive Economic Zone (EEZ), must have one overfill device that is permanently installed on each cargo tank and meets the requirements of this section. Each newly constructed tank vessel with a cargo capacity of 1,000 or more cubic meters (approximately 6,290 barrels), which is intended to be loaded with oil or oil residue as cargo, in order to receive a Certificate of Inspection (COI), must have an overfill device installed on each cargo tank that meets the requirements of this section.

(1) On a tankship, each cargo tank must be equipped with an overfill device (including an independent audible alarm or visible indicator for that tank) that meets the requirements for tank overfill alarms under 46 CFR 39.20–7(b)(2) and (3), and (d)(1) through (d)(4).

(2) On a tank barge, each cargo tank must be equipped with an overfill device that—

(i) Meets the requirements of 46 CFR 39.20–7(b)(2) and (b)(3) and (d)(1) through (d)(4), and 46 CFR 39.20–9(a)(1) through (a)(3);

(ii) Is an installed automatic shutdown system that meets the requirements of 46 CFR 39.20–9(b); or

(iii) Is an installed high level indicating device that meets the requirements of 46 CFR 39.20–3(b)(1), (b)(2), and (b)(3).

(c) Each cargo tank of a U.S. flag tank vessel must have installed on it an overfill device meeting the requirements of this section at the next scheduled cargo tank internal examination performed on the vessel under 46 CFR 31.10–21.

(d) Each cargo tank of a foreign flag tank vessel must have installed on it an overfill device—

(1) At the first survey that includes dry docking, as required by the vessel's flag administration, to meet the International Convention for the Safety of Life at Sea (SOLAS), 1974, as amended, or the International Load Line Convention of 1966; or

(2) At the first cargo tank internal examination performed on the tank vessel under 46 CFR 31.10–21.

(e) This section does not apply to a tank vessel that does not meet the double hull requirements of § 157 10d of this chapter and, under 46 U.S.C. 3703a(c), may not operate in the

navigable waters or Exclusive Economic Zone of the United States after January 1, 2000.

(f) This section does not apply to tank vessels that carry asphalt as their only cargo.

5. In § 155.750, paragraph (e) is added to read as follows:

§ 155.750 Contents of transfer procedures.

* * * * *

(e) If a cargo tank of a tank vessel is fitted with an overfill device, the transfer procedures must contain a description of the overfill device, including:

(1) The tank overfill device system and specific procedures for the person in charge to—

(i) Monitor the level of cargo in the tank; and

(ii) Shut down transfer operations in time to ensure that the cargo level in each tank does not exceed the maximum amount permitted by § 155.775(b).

(2) Pre-transfer overfill device equipment inspection and test requirements.

6. Section 155.775 is added to read as follows:

§ 155.775 Maximum cargo level of oil.

(a) For the purposes of this section, "oil" has the same meaning as provided in § 151.05 of this chapter.

(b) A cargo tank on a tank vessel may not be filled with oil higher than—

(1) 98.5 percent of the cargo tank volume; or

(2) The level at which the overfill alarm required by § 155.480 is set.

PART 156—OIL AND HAZARDOUS MATERIAL TRANSFER OPERATIONS

7. The authority citation for 33 CFR part 156 is revised to read as follows:

Authority: 33 U.S.C. 1231 and 1321(j)(1)(C) and (D); 46 U.S.C. 3715; E.O. 12777, 56 FR 54757, 3 CFR, 1991 Comp., p. 351; 49 CFR 1.46. Section 156.120(bb) is issued under the authority of section 4110, Pub. L. 101–380, 104 Stat. 515.

8. Section 156.105 is revised to read as follows:

§ 156.105 Definitions.

Except as specifically stated in a section, the definitions in § 154.105 of this chapter apply to this subpart.

9. In § 156.120, paragraph (bb) is added to read as follows:

§ 156.120 Requirements for transfer.

* * * * *

(bb) If the transfer operation involves loading oil, as defined in § 151.05 of this chapter, into a cargo tank, the overfill device required by § 155.480 of this chapter is installed and operating properly.

Dated: October 13, 1994.

A.E. Henn,

Acting Commandant, United States Coast Guard.

[FR Doc. 94–25998 Filed 10–20–94; 8:45 am]

BILLING CODE 4910–14–P

federal register

Friday
October 21, 1994

Part V

Federal Communications Commission

47 CFR Parts 25 and 94
Licensing Policies and Procedures, Satellite Communications; Final Rule

FEDERAL COMMUNICATIONS COMMISSION

47 CFR Parts 25 and 94

[CC Docket No. 92-166; FCC No. 94-261]

Licensing Policies and Procedures, Satellite Communications

AGENCY: Federal Communications Commission.

ACTION: Final Rule.

SUMMARY: In this final rule, the Commission publishes rules to govern the licensing and regulation of low-Earth orbit (LEO) mobile-satellite systems operating in the 1610–1626.5/2483.5–2500 MHz frequency bands. This rule follows a notice of proposed rulemaking published in the **Federal Register** on March 14, 1994 [59 FR 11746]. The qualification requirements and technical rules are intended to permit licensing of these systems and the provision of new domestic and international satellite services.

EFFECTIVE DATE: November 21, 1994.

ADDRESSES: Federal Communications Commission, 1919 M Street, NW., Washington, DC 20554.

FOR FURTHER INFORMATION CONTACT: Fern Jarmulnek, International Bureau, (202) 634–1682; Kathleen Campbell, International Bureau, (202) 634–1952.

SUPPLEMENTARY INFORMATION:

I. Introduction

1. By this Report and Order, the Commission takes the next step in the process of licensing the world's first commercial low-Earth orbit (LEO) satellites capable of providing both voice and data mobile satellite services (MSS) on a global basis. The satellites are to operate in the 1610–1626.5/2483.5–2500 MHz bands that were recently allocated both internationally and domestically to MSS.[1] This new mobile satellite service—the "MSS Above 1 GHz" or "Big LEO" satellite service—has the potential to provide not only a variety of new services to users in the United States, but to provide integrated communication services to all parts of the world, including those that are now grossly underserved. In a *Notice of Proposed Rulemaking* (*Notice*), adopted in January 1994,[2] the Commission proposed rules and policies to govern the service. Thirty-three parties filed comments in response to the *Notice* and 18 parties filed reply comments.[3] Since the pleading cycle closed, four of the applicants filed a Joint Proposal and Supplemental Comments (Joint Proposal).[4] A fifth applicant sent a letter to the Chairman (FCC) on September 14, 1994 regarding the Joint Proposal.[5] In this *Report and Order*, we adopt many of the proposals in the *Notice*, adopt others with modification, and defer action on several issues where a decision is premature. We also adopt many, but not all, of the terms of the Joint Proposal. We believe our decision will promote participation by the greatest number of applicants in an expeditious time frame.[6] It will create a new industry providing enormous economic benefit to the United States, and any other country that chooses to participate in the service.

2. All six applicants who filed applications by the cut-off date, as detailed below, will be provided with an opportunity to file amended applications that conform with the rules adopted today. Given the importance of proceeding quickly with licensing systems in this revolutionary service, amended applications must be filed by November 16, 1994 in order to receive continued consideration. As is our usual practice in the satellite area, each applicant must request construction, launch and operating authority to retain its status in this processing group. All amendments must be accompanied by the appropriate fee for applications for launch and operating authority for LEO satellite systems, if that fee has not yet been submitted. Applicants will be provided until January 31, 1996, at their option, in which to make a complete financial showing.[7]

3. As described in the *Notice*, the Big LEO service can offer an almost limitless number of services, including ubiquitous voice and date mobile services position location services, search and rescue communications, disaster management communications, environmental monitoring, paging services, facsimile transmission services, cargo tracking, and industrial monitoring and control.[8] Domestically, this service will help meet the demand for a seamless, nationwide and eventually global communications system that is available to all and that can offer a wide range of voice and data telecommunication services. In addition to enhancing the competitive market for mobile telecommunication services in areas served by terrestrial mobile services, this new mobile satellite service will offer Americans in rural areas that are not otherwise linked to the communications infrastructure immediate access to a feature-rich communications network. Moreover, Big LEO systems can extend these benefits throughout the world, and can provide those countries that have not been able to develop a nationwide communication service an "instant" global and national telecommunication infrastructure.[9] This network can be used to provide both basic and emergency communications to their entire populations. Big LEO systems may prove to be critical component in the development of the global information highway.

4. The Big LEO service also has the potential to stimulate significant economic growth both in the United States and abroad. A potential multi-billion dollar industry will be created, generating opportunities for economic growth in a variety of markets. First, the estimated costs to construct the applicants' space segments range from $97 million to over $2 billion each. The manufacturing costs for the ground segment, which include both user units and gateway stations, are expected to be hundreds of millions of dollars more. Thus, manufacturing these systems may lead to a substantial investment in the United States economy and create a significant number of high paying jobs in the areas of research and development, production, marketing and service administration. As the services become available, additional growth opportunities will be created. One of the applicants, for example, expects that by 2001 the demand for user transceivers will be 1.3 million in the United States and 4.7 million worldwide.[10] If so, this will create a major global industry whose function will be to provide users with mobile units and services. As demand grows and as markets develop, additional employment opportunities will be created. Customer purchases of transceivers and user service charges will generate additional investment in the economies of the host countries. Finally, the enhanced communications

[1] International Telecommunication Union, Final Acts of the World Administrative Radio Conference (WARC–92), Malaga-Torremolinos (1992); Report and Order, ET Docket No. 92–28, 9 FCC Rcd 536 (1994) (*Allocation Order*).

[2] Amendment of the Commission's Rules to Establish Rules and Policies Pertaining to a Mobile Satellite Service in the 1610–1626.5/2483.5–2500 MHz Frequency Bands, 9 FCC 2d 1094 (1994).

[3] A list of commenters is attached as Appendix A.

[4] *See* Note 23, *infra*.

[5] *See* Note 23, *infra*.

[6] *See* S.R. 103–309 (July 14, 1994).

[7] *See* para. 46, *Infra*.

[8] *See* paras. 196–202, *infra*, regarding the use of Big LEO systems of emergency communications.

[9] It is estimated that some of these services will cost as little as 22 cents per minute.

[10] Application of Motorola Satellite Communications, Inc. at 11.

services offered by this industry will, of themselves, create a broad secondary economic growth. Immediate access to an advanced global communications infrastructure can increase the efficiency of existing businesses and create new ones.

5. The United States has led the world in developing and implementing satellite technology. We expect many of the economic, cultural and other gains we have seen in the fixed-satellite industry to be reflected in the new mobile satellite industry. The Big LEO proposal before us represent an opportunity for the United States to continue its leadership role in promoting global development through enhanced communication infrastructures and services. We intend to license these systems as quickly as possible so that this opportunity is not lost.

II. Background

6. As described in the *Notice*,[11] this proceeding was initiated in late 1990, when Ellipsat Corporation (Ellipsat)[12] and Motorola Satellite Communications, Inc. (Motorola) filed applications to construct LEO satellite systems in the 1610–1626.5/2483.5–2500 MHz bands and the 1610–1626.5 MHz band, respectively.[13] At the time these applications were filed, there was no frequency allocation in these bands for MSS. The banks were allocated to, among other services, the radiodetermination satellite service (RDSS), which encompasses satellite radionavigation and radiolocation services.[14] The Motorola and Ellipsat systems were intended to provide voice and data MSS in addition to RDSS. Both applicants requested waivers of the U.S. Table of Frequency Allocations, 47 CFR § 2.1, to permit non-conforming MSS operations in the bands.[15]

7. The Commission placed the Ellipsat and Motorola proposals on public notice and established a June 3, 1991 cut-off date for filing applications to be considered concurrently with them.[16] In response, Constellation Communications, Inc. (Constellation), Loral Cellular Systems Corp., now doing business as Loral Qualcomm Partnership (LQP), TRW, Inc. (TRW), and AMSC Subsidiary Corporation (AMSC) filed applications. Constellation, LQP, and TRW proposed to construct LEO satellite systems. AMSC proposed to add additional frequencies onto its authorized geostationary satelliteorbit (GSO) system.[17] The LEO applicants proposed two basic LEO system architectures. TRW, LQP, Ellipsat, and Constellation proposed a code division multiple access (CDMA) architecture. CDMA systems can share the same frequencies when operating under certain technical constraints.[18] Motorola proposed a time division multiple access/frequency division multiple access (TDMA/FDMA) architecture. TDMA/FDMA systems must operate on separate dedicated frequencies.[19] AMSC's proposed GSO system could use either CDMA or narrowband FDMA techniques.

8. The World Administrative Radio Conference (WARC–92), allocated frequencies for MSS in February 1992.[20] Specifically, the 1610–1626.5 MHz band was allocated on a co-primary basis with other radio services for MSS Earth-to-space operations and the 2483.5–2500 MHz band was allocated on a co-primary basis for space-to-Earth operations.[21] In addition, a secondary allocation was made for MSS space-to-Earth operations in the 1613.8–1626.5 MHz segment of the 1.6 GHz band. Shortly thereafter, the Commission proposed an identical domestic allocation and subsequently adopted that allocation in December 1993.[22]

9. The Commission conducted a negotiated rulemaking from January through April 1993 to assist it in developing technical rules for the MSS Above 1 GHz service. The Negotiated Rulemaking Committee's (the Committee's) work included technical matters relating to compatibility among the proposed MMS systems (inter-system sharing issues), compatibility between MSS and other services in the band or in adjacent bands (inter-service sharing issues), and the operations of MSS feeder links and intersatellite links. The Committee reached consensus on many issues, but did not reach a consensus regarding a technical method by which all proposed systems could be accommodated within the 1610–1626.5/2483.5–2500 MHz bands.[23]

10. In January 1994, the FCC adopted the *Notice* proposing, among other things, a LEO design requirement, a requirement that systems be capable of serving all areas of the world (except for the polar regions) for at least 75% of each day, a requirement that systems be capable of serving all areas of the United States at all times. and a requirement that applicants demonstrate sufficient current assets or irrevocably committed financing to meet construction and launch costs for the entire system. We also proposed a spectrum sharing plan that could accommodate up to five systems. We indicated that if mutual exclusivity could not be resolved, we would consider awarding licenses by auction, lottery or comparative hearing.[24]

---

[11] *See Notice*, note 2, *supra*, at paras. 5–9.

[12] Ellipsat is now doing business as Mobile Communications Holdings, Inc. Because it has participated throughout this proceeding as Ellipsat, we will continue to refer to it as Ellipsat in this *Report and Order*.

[13] Ellipsat proposed the 1.6 GHz band for Earth-to-space transmissions and the 2.4 GHz band for space-to-Earth transmissions. Motorola proposed to use the 1.6 GHz band for bidirectional transmissions. Motorola later modified its application to request the 1616–1626.5 MHz band only. *See* Minor Amendment filed by Motorola (Aug. 14, 1992).

[14] Portions of the banks are also allocated to the aeronautical radionavigation service (ARNS), the radioastronomy service, the terrestrial fixed-service and for use by industrial, scientific, and medical equipment. *See* paras. 98–162, *infra*, for a complete discussion of sharing between MSS and other allocated services.

[15] These waiver requests have become moot in light of the subsequent domestic and international MSS allocation in these bands. *See* note 1, *supra*.

[16] Public Notice, Report No. DS–1068, 6 FCC Rcd 2083 (1991).

[17] AMSC requested authority to modify its authorized upper L-band (1545–1559/1646.5–1600.5 MHz) MSS system to include the 1616.5–1626.5 MHZ frequency bands.

[18] Spread spectrum CDMA is a digital transmission technique in which the signal occupies a bandwidth larger than that needed to contain the information being transmitted. Because the signal is spread over a wide bandwidth, the power is dispersed and interference potential is reduced. The spreading is accomplished by modulating the signal by a code that is independent of the information data. A synchronized code in the receiver is used to de-spread the signal and recover the information. The spreading and the variation in the code permit a number of users to operate on the same frequency simultaneously without causing harmful interference.

[19] TDMA is a transmission technique in which the same frequency band is used by both uplink and downlink transmissions in alternating time slots. FDMA provides multiple discrete channels with different center frequencies.

[20] *See* note 1, *supra*.

[21] "Primary" services have equal rights to operate in particular frequencies. Stations operating in primary services are protected against interference from stations of "secondary" services. Moreover, stations operating in a secondary service cannot claim protection from harmful interference from stations of a primary service. *See* 47 CFR §§ 2.104(d) and 2.105(c).

[22] *See* note 1, *supra*.

[23] *See* Report of the MSS Above 1 GHz Negotiated Rulemaking Committee (Apr. 6, 1993). The Committee included two independent attachments discussing this issue in the Report. One was supported by AMSC, Celsat, Inc., Constellation, Ellipsat, LQP and TRW. The other was supported by Motorola. Since the end of the Negotiated Rulemaking, the LEO applicants have submitted several partial settlement proposals. *See* Joint Filed Comments, submitted by Motorola and LQP (Oct. 7, 1993); Joint Spectrum Sharing Proposal, submitted by Constellation, Ellipsat and TRW (Oct. 8, 1993). Joint Proposal and Supplemental Comments submitted by Constellation, Ellipsat, Motorola, and TRW (Sept. 9, 1994). *See also* letter from LQP to FCC (Sept. 13, 1994).

[24] *Notice*, note 2, *supra*, at paras. 29–47.

III. Discussion

A. Licensing Procedures

1. Qualification Requirements

11. As discussed in the *Notice*, unless otherwise proscribed by rule, statute or treaty, the Commission has traditionally adopted qualification requirements for each satellite service that reflect the nature of and entry opportunities for the particular service being licensed. Where entry opportunities for a particular service are limited, our threshold qualification requirements for that service are designed to ensure that those awarded licenses can expeditiously implement state-of-the-art systems that further the public interest. If applicants are unable to meet the basic qualifying criteria, their applications are dismissed without additional hearing.

a. *Technical qualifications*—i. Orbit considerations. 12. In the *Notice*, we proposed to require MSS Above 1 GHz systems to operate in non-geostationary orbits.[25] Because of their lower altitude orbits, LEO systems "can shorten the transmission time between two earth stations, serving to reduce or eliminate the time delay that may now be present in [GSO] satellite-delivered telephone service."[26] We also stated that the Communications Act specifically requires us "to encourage the provision of new technologies and services to the public."[27] We noted that LEO satellite systems, which cover higher latitudes than GSO satellites, and provide a variety of low power links to and from terrestrial equipment, represent such a new technology. We also noted that the inherently global nature of LEO systems offers a broad range of public interest benefits for the United States, including increased possibilities of U.S. leadership in developing and implementing satellite technology, and enhanced U.S. global competitiveness in telecommunication. We suggested that the unique features of LEO systems would foster social and economic benefits throughout the world.

13. We requested comment on the potential for MSS Above 1 GHz systems to generate social, economic, and technical benefits, both domestically and globally, and the extent to which these benefits are realizable with LEO and GSO satellites. We also asked applicants to specify the extent to which their proposed systems will foster these goals and the manner in which their services are planned to be offered. Prospective customers were asked to specify their anticipated use or uses of MSS Above 1 GHz systems, including a discussion of whether equivalent services can be provided by LEO and GSO facilities and whether, and the extent to which, alternative terrestrial services are available.

14. AirTouch Communications (AirTouch), Constellation, Ellipsat, LQP, Motorola, Novacom Inc. (Novacom), and TRW support our proposal to require MSS Above 1 GHz systems to operate in LEO orbits. The range of technical benefits to the United States and world communities by LEO systems includes virtually instantaneous voice transmissions, broader geographic coverage, use of low power handheld transceivers and small antennas. AMSC, Comsat, Mobile Communications (Comsat), Mobile Datacom Corporation (Mobile Datacom), and Newcomb Communications, Inc. (Newcomb) do not support our proposal. They argue that there will be no significant qualitative or quantitative difference in the time delay experienced by users of GSO and non-GSO systems and that GSO systems are capable of providing services to most of the Earth. They further argue that LEO technology is subject to shadowing outages,[28] is more complex, and is unproven.

15. We adopt our proposed LEO design requirement. First, AMSC has not convinced us that our assumption regarding the time delay in high altitude GSO systems was in error. While system processing times associated with non-GSO satellite handoffs may be marginally longer than the 18 milliseconds noted by LQP, AMSC has not shown that a GSO system's typical voice transmission delay of some 250 milliseconds, or even longer for multiple hops, is not noticeable to users.

16. Further, LEO systems are significantly superior in their coverage capabilities. While GSO systems can provide coverage to most of the world, this coverage is limited in areas of high latitude, including parts of Alaska. AMSC concedes that GSO systems can provide only "near" total coverage of the Earth. Although GSO systems are capable of providing acceptable services across most of the Earth's surface, LEOs are capable of providing truly global coverage. LEO technology, for example, may enable residents of remote parts of Alaska to have individual telephone access for the first time. There is nothing in the record to suggest that provision of such broad geographical service reduces the capacity of LEO systems to serve more concentrated areas, as AMSC suggests. The public interest would be best served by the technology that offers the broadest potential coverage.

17. The use of handheld transceivers also is facilitated by LEO systems. LEO satellites' lower power levels alleviate the need for large antennas aboard the spacecraft and reduce transceiver weight and volume, enhancing their portability. By contrast, AMSC suggests that handheld transceivers are not contemplated by GSO systems.[29] Its immediate plans do not include handheld capability, though its second generation system is expected to support them.[30] As we embark on the promise of new mobile technologies, we find it in the public interest to permit the timely deployment of personal communications services that include the broad use of handheld transceivers.

18. One risk cited by AMSC is the increased possibility that the satellites in the LEO constellation will collide with other objects in space. We do not view this as stifling LEO technology. Both the likelihood of collisions and future mitigation methods are being discussed in domestic and international fora. However, the record in this proceeding does not support a finding that space collisions will become a significant problem for LEO systems. We also acknowledge that the reception shadowing associated with LEO satellite movement relative to the Earth's surface (which AMSC suggests would adversely affect signal quality during voice communications) may add to the operational challenges confronting LEO MSS technology. There is no showing, however, that shadowing is more of a problem with LEO technology than it is with GSO technology.

19. Advocates of both GSO and LEO systems argue that their technology will offer economic and social benefits, domestically and globally. The essential advantage of GSO systems is their proven capability to provide telecommunication services. Intelsat and Inmarsat are but two examples. These successes, however, are not sufficient to preclude embracing a new and potentially more efficient technology, notwithstanding its substantial risks and costs. On the contrary, the Commission has a mandate to encourage new technologies and services.[31] While both LEO and GSO systems portend substantial opportunities for employment growth and export of U.S. technologies

[25] *Id.* at paras. 20–22; proposed § 25.143(b)(1).

[26] *Id.* at para. 22.

[27] 47 U.S.C. 157.

[28] Shadowing occurs when transmissions from the satellite or mobile transceivers are blocked by buildings and vegetation. Shadowing also occurs to GSO systems when the user transceiver terminal is located on a vehicle.

[29] AMSC Reply Comments at 3, n. 1.

[30] *Id.*

[31] 47 U.S.C. 157.

worldwide, LEO systems have greater potential to serve more uniformly the United States and international locations with smaller, more ubiquitous and lower power equipment. This leads us to conclude that the primary use of the subject spectrum should be by LEO systems. We therefore adopt Section 25.143(b)(2)(i) as proposed in the *Notice*.

20. Most commenters agree that it would be difficult for GSO and LEO systems to operate MSS services together in this band. Indeed, this was a significant factor in our decision to propose limiting the 1610–1626.5/2483.5–2500 MHz band to LEO systems Notwithstanding our decision to adopt a LEO design requirement, we would consider authorizing a GSO system in these bands upon a showing that its operations would not cause interference to or affect LEO operations. Similarly, the provision of radiodetermination satellite services (RDSS) by either LEO or GSO systems would be permissible if fully compatible with licensed LEO MSS systems.[32]

ii. Global vs. regional coverage. 21 In our *Notice*, we discussed the geographic coverage we would require these satellite systems to provide. In view of our interest in furthering the creation of the global information infrastructure, we proposed to require each MSS Above 1 GHz applicant to demonstrate that its proposed system is capable of providing mobile satellite service to all areas of the world, with the exception of the polar regions, for at least 75% of every 24 hour period. Specifically, we proposed that Big LEO satellite systems be designed so that at least one satellite would be visible above the horizon at an elevation angle of at least 5° for at least 18 hours each day at latitudes less than 80°.[33]

22. The commenters generally support this requirement. They disagree, however, on the extent to which systems must offer service in or near the polar regions. The majority, including the system applicants, agree that there is little need for a requirement to serve unpopulated areas. They argue that the additional costs associated with such service would not be justified. For example, TRW suggests that service up to 80° northern and southern latitudes may not be necessary, because there are no populated areas that far north or south and the economic costs of requiring such service are high. Ellipsat favors requirements of 55° Southern Latitude and 75° degrees Northern Latitude, to cover all but the most remote population centers. The parties to the Joint Proposal modify their previous positions by suggesting a coverage requirement of up to 70° North Latitude and 55° South Latitude.

23. As noted, LEO systems are capable of providing service to all points on Earth. We recognize, however, the need to balance system cost against geographical service area. We agree with the commenters that it is sufficient, given projected need and alternative service options, to require service only to populated areas. We therefore require that Big LEO systems be capable of serving locations as far north as 70° latitude and as far south as 55° latitude. This will allow coverage to populated areas that cannot be reached by GSO systems. While ships and airplanes may traverse the polar regions beyond these latitudes, they are not necessarily deprived of service because the LEO satellites may, in fact, be visible.

iii. Continuous coverage of the fifty states. 24. We indicated in the *Notice* that the public interest would be served if LEO systems provided efficient and ubiquitous voice service to users throughout the United States. We therefore proposed to require each LEO system to have at least one satellite at an elevation angle of at least 5° at any given time in all areas of the United States.[34]

25. Several commenters note that we proposed to require global "mobile satellite services" in proposed Section 25.143(b)(2)(ii) and domestic "voice" service in proposed Section 25.143(b)(2)(iii). Our expectation is that LEO system operators will have market incentives to offer more than merely voice services, but for purposes of consistency we will revise proposed Section 25.143(b)(2)(iii) to read "mobile satellite services." Further, in the Joint Proposal, the parties agree that Big LEO systems should be capable of covering all fifty states, Puerto Rico and the U.S. Virgin Islands. We will amend Section 25.143(b)(2)(iii) to reflect this coverage.

b. Financial qualifications. 26. In light of the enormous costs involved in constructing and launching a satellite system, we have always considered financial ability a significant factor in determining whether an applicant is qualified to hold a license. Historically, the Commission has fashioned financial requirements for satellite services on the basis of entry opportunities in the particular service being licensed. This stems from our repeated experience that licensees without sufficient available resources spend a significant amount of time attempting to raise the necessary financing and that those attempts often end unsuccessfully.[35] Consequently, where a grant to an under-financed applicant may preclude a fully capitalized applicant from implementing its plans, and service to the public may be consequently delayed, we have required a stringent financial showing to ensure that the public interest would be served.[36] We have required a less stringent financial showing where grant to an under-financed applicant will not prevent another from going forward. For example, we required only a detailed business plan in the radiodetermination satellite service, where all applicants could be accommodated and future entry was possible.[37] In contrast, we required evidence of full, irrevocable financing in the domestic-fixed satellite service, where applications to implement space stations regularly exceed the number of available orbital locations for those satellites.[38]

27. The Negotiated Rulemaking Committee could not agree to a method by which all six proposed systems could be licensed. Further, the sharing plan we proposed in the *Notice*, and which we adopt today,[39] does not accommodate all pending applicants and leaves little or no spectrum available for expansion of existing systems or the development of future MSS systems within the United States. Consequently, consistent with our past practice, we seek to ensure that those applicants awarded Big LEO licenses have the financial ability to proceed.

28. The domestic fixed-satellite standard was developed to serve the

[32] *See* 47 CFR § 25.141(f).

[33] *See Notice*, note 2, *supra*, App. A at 1152; proposed Section 25.143(b)(2)(ii).

[34] *See id.*; proposed Section 25.143(b)(2)(iii).

[35] *See, e.g.*, National Exchange Satellite, Inc., 7 FCC Rcd 1990 (Com. Car. Bur. 1992); Rainbow Satellite, Inc., Mimeo No. 2584 (Com. Car. Bur., released Feb. 14, 1985); United States Satellite Systems, Inc., Mimeo No. 2583 (Com. Car. Bur., released Feb. 14, 1985) (domestic satellite licenses declared null and void for failure to begin implementation as required by license). In addition, Geostar Corporation, a start-up company licensed in the radiodetermination satellite service, declared bankruptcy nearly five years after its licenses were issued. It had not built any of its satellites.

[36] This approach has not prevented smaller firms from participating in the satellite services market because ownership of a space station is not mandatory. Space station capacity can be leased or bought, and earth stations can be acquired at relatively low costs.

[37] Amendment to the Commission's Rules to Allocate Spectrum for, and to Establish Other Rules and Policies Pertaining to, a Radiodetermination Satellite Service, 104 FCC 2d 650 (1986) (*RDSS Licensing Order*). We note that none of the four entities awarded licenses implemented their proposed systems, with the last remaining licensee, Geostar Corporation, declaring bankruptcy in 1991.

[38] Licensing Space Stations in the Domestic-Fixed Satellite Service, 50 Fed. Reg. 36071 (Sept. 5, 1985) (*1985 Processing Order*).

[39] *See* paras. 44–45, *infra*.

public interest by deterring warehousing and inefficient use of valuable orbit spectrum resources. Given the same public interest concerns here, we proposed in the *Notice* a financial standard for the Big LEO service identical to the one used in the domestic fixed-satellite service, noting that a lesser standard could allow permittees to tie up scarce spectrum resources while preventing other qualified entities from providing service to the public.[40] Thus, we proposed to require Big LEO applicants to provide evidence of current assets, operating revenues, or irrevocably committed debt or equity financing sufficient to meet the estimated costs of constructing and launching all planned satellites, and operating the system for the first year.[41]

29. The four parties to the Joint Proposal suggest using a less stringent financial standard that requires an applicant to show "financial preparedness, including reliance on projected revenues and future public offerings" in order to be granted a construction permit. Within one year from the date of the grant of a license, each permittee would be required to demonstrate that it meets the domestic fixed-satellite service financial standard with respect to 25% of the total constellation construction and launch costs. LQP, in contrast, argues that this proposed relaxation of financial standards must be balanced against the concern that only viable applicants be licensed.[42]

30. We conclude that although more relaxed approaches may be used for some satellite services, a strict financial requirement is warranted for the Big LEO service. The proposed Big LEO systems will cost between $97 million and $2 billion to implement. These are, by far, the most expensive satellite systems to date. As we indicated in the *Notice*, our experience with the satellite industry has proven that arranging financing for any space station system, even one significantly less costly than a Big LEO system, is extremely difficult, even after a construction permit has been granted.[43] Consequently, adopting a lesser financial standard than the domestic fixed-satellite standard, such as the one suggested in the Joint Proposal, could tie up spectrum for years, with contrary to the public interest. While system implementation milestone requirements[44] will provide a mechanism by which to revoke the licenses of those entities that are not capable of going forward, this process takes considerable time and can delay qualified entities from implementing systems and providing service to the public.[45] Because all pending Big LEO applicants cannot be accommodated and because there appears to be no room for future entry, granting an under-financed space station applicant a license may preclude an applicant that possesses the necessary financial resources from implementing its plans, and consequently service to the public may be delayed. Accordingly, we conclude that a financial demonstration identical to the one used in the domestic fixed-satellite service, as proposed in the *Notice*, should be adopted for the Big LEO service.

31. Applicants relying on internal financing need not set aside specific funds for their systems. Rather, as in the domestic fixed-satellite service, we require only a demonstration of current assets or operating income sufficient to cover system costs. The availability of internal funds sufficient to cover a system's costs provides adequate assurance at the time the Commission acts on the application that the system can be built and launched. Current assets—which includes cash, inventory, and accounts receivable—provide a general measure of a company's ability to finance the project itself or to raise funds from lenders and equity investors on the basis of its on-going operations. Highly capitalized companies possess more collateral and, thus, are in a better position to borrow money than thinly capitalized companies.

32. Further, "irrevocably" committed external financing is financing that has been approved and does not rest on contingencies which require action by either party to the loan or equity investment. In other words, the instrument of financing must demonstrate that the lender has already determined that the applicant is creditworthy and, absent a material change in circumstances, is prepared to make the loan immediately upon grant of a Commission authorization.[46] This is not to preclude applicants from relying on operating revenues from the initial operations of their systems to finance the remainder of their systems. Nevertheless, to ensure that the system is completed in a timely manner if revenues are not available as soon as anticipated, we require a commitment that a lender is prepared to finance the entire cost of the system.

33. Some of the applicants argued in their comments[47] that a more relaxed standard is supported by our use of a less stringent financial requirement in the radiodetermination satellite service (RDSS) and the non-voice, non-geostationary (NVNG) service. These parties argue that the unproven nature of the RDSS and NVNG services led to the adoption of a financial standard that permitted applicants to finance the systems as they are built and deployed, and that similar considerations apply in the Big LEO service. Our primary reason for the "relaxed" standard in the RDSS and NVNG services, however, was that all pending applicants could be accommodated and future entry was possible.[48] Consequently, a grant to an under-financed applicant would not preclude another qualified entity from going forward. The financial qualification standard adopted for RDSS and NVNG services is therefore inappropriate for Big LEOs.

34. Some of the applicants also argue that we should require only a demonstration of partial financing. They contend that applicants that have the financing to meet construction and launch costs for the number of satellites needed to provide limited domestic and global service will be able to finance the remainder of their systems with the operating income from these services. Such a position, however, would not promote the global availability of this

[40] *1985 Processing Order*, note 38, *supra*, at para. 8.

[41] *Notice*, note 2, *supra*, at para. 27. We noted that "first year operational costs" were to be calculated for the year following the launch of the first satellite in the constellation.

[42] *See* Letter from Chairman, Loral Corporation to Christopher B. Galvin, Motorola, Inc. (Sept. 13, 1994).

[43] *See* note 35, *supra*.

[44] *See* paras. 188–193, *infra*.

[45] For example, ABCI, Rainbow, and USSSI were granted domestic fixed-satellite licenses in early 1983. Those licenses were not declared null and void until two years later, shortly before action was taken on the next processing group of domsat applications. Applications in that particular processing group had been on file since late 1983 and action on that group was delayed, in part, by the ABCI, Rainbow, and USSSI proceedings. *See e.g.*, United States Satellite Systems, Inc., FCC 83–602 (released Jan. 23, 1984) (granting USSSI an additional six months in which to complete its financing), Mimeo No. 2583 (released Feb. 14, 1985) (revoking USSSI authorizations), FCC 85–394 (released Aug. 29, 1985) (denying USSSI's applications for review).

[46] For example, a change in general market conditions or in the applicant's creditworthiness is an acceptable limitation on the lender's commitment to make the loan. Further, a lender is not required to lend the applicant the entire sum at once. Rather, funding can be staggered to reflect the system's implementation schedule or the applicant's need to access those funds. *See* Licensing Space Stations in the Domestic-Satellite Service, 101 FCC 2d 223 (1985) (*1985 Processing Group Notice of Proposed Rulemaking*), at para. 22.

[47] We will address all concerns raised in the comments even though they may be inconsistent with the positions taken by the applicants in the Joint Proposal.

[48] *See Notice*, note 2, *supra*, at 1108; *RDSS Licensing Order*, note 37, *supra*; Report and Order in CC Docket No. 92–76, 8 FCC Rcd 8450 (1993) (*NVNG MSS Order*).

service. A system that relies too heavily on operating income from its first satellites for its completion could easily become stalled before it is able to provide domestic or global service that meets our service requirements.[49] Any applicant that cannot demonstrate the capability to launch more than a limited number of satellites should not be considered for licensing at the expense of potential entrants that could provide global service and continuous domestic service.

35. Ellipsat comments that we should require applicants relying on internal funds to demonstrate a management "commitment" to expend those funds for the Big LEO project. Ellipsat argues that this requirement would put companies with greater capital assets on an even footing with smaller applicants who must rely on "irrevocable" outside loan commitments to establish their financial qualifications. As we stated in adopting the domestic-fixed satellite standard, we will not require management to set aside specific funds for the system. We will, however, require applicants relying on internal assets to provide a balance sheet demonstrating current assets or operating income sufficient to meet the space segment costs together with evidence of a management commitment to the project. This does not require an unalterable commitment that the funds will be expended regardless of market conditions. Rather, consistent with our approach to credit arrangements provided by outside sources, management of the corporation providing the funding must commit that absent a material change in circumstances, it is prepared to expend the necessary funds.[50] Those applicants relying on financing from parent corporations must make the same showing with respect to the parent corporation's commitment.

36. AMSC urges that, given the short life of LEO satellites, we should require the applicants to demonstrate the financial capability to build an entire constellation and a fleet of replacement satellites. Although some of the proposed systems use satellites with a short life, a requirement to demonstrate full funding for these before the first generation is built would be exceptionally onerous and unnecessary. We are confident that after constructing and operating a full fleet of satellites, a licensee would have ample incentive and resources to implement replacement satellites, unless there is insufficient demand. In that case, however, the public would not be harmed by discontinuation of the licensee's service.

37. We recognize that applicants may be able to provide the service requirements adopted today with fewer satellites than proposed in the pending applications. In such a case, an applicant has the option of course, to modify its pending application to specify only those satellites necessary to meet our minimum requirements, and its financial and technical showing would need to cover only such a constellation. It could then apply to expand its constellation as originally envisioned, as it attains the financial capability to do so.

38. Consequently, to meet the public interest objective of ensuring prompt initiation of this new satellite service, we adopt our proposed rule that requires each Big Leo applicant to demonstrate the ability to build and launch all satellites for which it has applied, which includes those satellites necessary to fulfill our service requirements, and to operate its system for one year after launch of the first satellite in its constellation. In doing so, however, we shall modify our eligibility requirements somewhat in an effort to achieve greater participation by the applicants in this processing group.

39. First, consistent with our paramount objective of securing early implementation of these satellite services, we shall adopt a rule, consistent with our proposal in the Notice, that will enable applicants who can now demonstrate their financial qualifications to receive priority in obtaining license grants. Thus, any applicant who can submit a complete, amended application on or before November 16, 1994, and demonstrates financial capability under the standards set forth in the rule adopted in this proceeding, will be processed immediately. Assuming sufficient spectrum is available to award licenses to all such financially and otherwise qualified applicants, we will grant licenses to these applicants. Given the national and other public interest benefits of ensuring the United States' global leadership in providing these important new satellite services, we also plan to process these applications on an expedited basis, with action anticipated by January 31, 1995. Making these grants promptly will enable such fully qualified applicants to begin immediately the time-consuming process of satellite construction, thereby significantly assisting in United States' efforts to complete the international coordination process and achieving our statutory and public interest objective of bringing new and innovative services to the public at the earliest possible time.

40. We also wish, however, to accord some processing priority to other applicants in this group who may need more time to establish their financial qualifications, and who have all devoted significant time, effort and resources towards establishing the Big LEO service both domestically, in the Negotiated Rulemaking, and internationally. For example, until feeder link frequencies can be assigned to a particular system, which will not likely occur until after the next World Radio Conference to be held in November 1995 (WRC–95), it may be difficult for some of these applicants to finalize financial arrangements for their systems. Consequently, in an effort to afford an additional opportunity for entry by such applicants, we will allow applicants who cannot meet our financial qualifications requirement at this time an additional period of time to establish their qualifications. Specifically, we will require these applicants to file amended applications by November 16, 1994 to ensure their continued consideration, but we will allow them until January 31, 1996—two months after the completion of WRC–95—to demonstrate compliance with the financial standard adopted today.

41. Under our two-tiered eligibility rule, applicants who make a decision to defer their financial showing until January, 1996, will not jeopardize their status in the current processing group. Specifically, new applications for Big LEO systems will not be considered until after action on the six pending applications is completed. Nevertheless, such applicants will not be accorded the same processing priority as those applicants who are willing and able to demonstrate their financial qualifications far sooner, by November 16, 1994, and whose expeditious grants will better enable us to achieve early and successful international coordination and implementation of this service. Because the spectrum sharing plan we adopt today accommodates up to five systems,[51] we also recognize that applicants choosing not to make a financial showing until January 1996, may find their applications are mutually exclusive situations. Nevertheless, we believe a very significant likelihood exists that our financial eligibility rule will result in more of these applicants obtaining grants and that, in the intervening time frame until January

[49] *See* para. 29, *supra*.

[50] *See 1985 Processing Order*, note 38, *supra*, at n. 26.

[51] *See* paras. 44–45, *infra*.

1996, events may occur that avoid mutual exclusivity altogether.

42. If it turns out that all six applicants are able to establish their financial qualifications by the November 16, 1994 deadline for amended applications, or alternatively, that all six applicants defer their financial showings until January 1996 and all are then deemed financially qualified, we will implement the auction procedure described below, paras. 88–97, to award licenses. If, however, some grants have been made prior to January 1996, and a mutually exclusive situation arises then, the auction procedure outlined below cannot be used. However, given the uncertainty that such a situation will ever arise, we will not at this time decide how to process any such remaining mutually exclusive applications. Presumably, however, such grants would be awarded through an auction mechanism that is appropriate in the circumstances. We have decided, however, to defer any final decision on that issue at this time.

2. Spectrum Sharing Plan

a. *Background.* 43. As we discussed in the *Notice*, the six applicants proposed two system designs (LEO and GSO) and two system architectures (CDMA and TDMA/FDMA). A CDMA architecture would permit multiple systems to share the same frequencies. A TDMA/FDMA architecture would operate bi-directionally in a portion of the 1.6 GHz band only and would require each system to operate on discrete frequency band segments. The Committee's work plan called for the Committee to develop rules that would maximize multiple entry and avoid or resolve mutual exclusivity among the six applications. The applicants, however, could not develop a set of technical parameters and sharing criteria that could accommodate all proposed systems. In the *Notice*, we proposed a sharing plan that could accommodate up to four CDMA systems and one TDMA/FDMA system.[52] The plan was based, in part, upon partial settlement proposals filed by two groups of LEO applicants after the Negotiated Rulemaking was concluded.[53] The plan proposed to assign licensees implementing CDMA systems in the United States to 11.35 MHz of shared bandwidth at 1610–1621.35 MHz. It proposed to assign a TDMA/FDMA system operating in the United States to 5.15 MHz of dedicated bandwidth at 1621.35–1626.5 MHz. If only one CDMA system is implemented, the plan proposed to adjust the domestic assignment for that system to 8.25 MHz at 1610–1618.25 MHz, leaving the freed 3.15 MHz of spectrum available for possible reassignment to the TDMA/FDMA licensee or for new entry. We also tentatively concluded that CDMA systems would be provided with equal amounts of downlink and uplink spectrum, unless CDMA system proponents could demonstrate an unequal assignment was warranted.

b. *The basic plan.* 44. All five applicants proposing LEO systems agree that our plan provides a basis for accommodating five LEO systems. None takes issue with the framework of the plan: up to four CDMA systems can share 11.35 MHz of bandwidth in the 1.6 GHz band and that one TDMA/FDMA system can operate over 5.15 MHz of dedicated bandwidth. Constellation, for example, states that 11.35 MHz can "support competitive CDMA systems operating in a sharing environment."[54] Motorola supports awarding a single TDMA/FDMA license in 5.15 MHz of bandwidth.[55] LQP, TRW, and Ellipsat all agree that both LEO transmission techniques can be accommodated, with CDMA systems operating on shared spectrum. Indeed, the four proponents of the Joint Proposal, supported by LQP, explicitly agree to an 11.35 MHz/5.15 MHz spectrum split.

45. Despite its general agreement that its system could be accommodated in 11.35 MHz of shared spectrum, Constellation contends in its comments that all five LEO applicants should be given equal options to use the spectrum. Specifically, it argues that adoption of rules requiring four LEO applicants share spectrum, while allowing the remaining applicant to have exclusive use of its own band segment or assigning prime spectrum to one applicant and impaired spectrum to another, would violate the doctrine enunciated in *Ashbacker Radio Corp. v. FCC*, 326 U.S. 327 (1945) (*Ashbacker*). We do not agree that a rule requiring sharing by applicants proposing CDMA systems, and that permits other applicants to have exclusive spectrum, implicates *Ashbacker*. Such a rule is merely a reasonable exercise of our rulemaking authority, based upon the technical characteristics of the systems involved. We also note that the CDMA applicants agreed to a band sharing plan. Indeed, Constellation agrees that its system can be accommodated in a shared band. Consequently, we adopt the plan's basic framework.[56]

46. Despite their general support for the plan, all LEO applicants request some modifications or clarifications. The requests center around three issues: (1) what portion of the 2.4 GHz MSS downlink band will be available to the CDMA licensees; (2) whether MSS operations in the lower 6 MHz of the 1.6 MHz band will be impaired by GLONASS, the Russian Global Navigation Satellite System, and radioastronomy serviced (RAS) operations in that band; and (3) whether the 11.35 MHz CDMA assignment will be automatically reduced to 8.25 MHz should only one CDMA system become operational. We discuss these in turn.

c. *Downlink assignment.* 47. In the *Notice*, we assumed that CDMA systems assigned to share the 1.6 GHz uplink spectrum would require a corresponding amount of 2.4 GHz downlink spectrum. We requested comment on this assumption. All CDMA operators strongly disagree, arguing in their comments and in the Joint Proposal that CDMA applicants should be allowed to share the entire 16.5 MHz of 2.4 GHz downlink spectrum allocated to MSS. They argue that the systems must operate over the entire bandwidth to achieve maximum capacity at minimum cost. According to the CDMA proponents, if the number of satellites transmitting in any segment of the 2.4 GHz band is minimized, the satellites' cost can be substantially reduced. They also argue that the 2.4 GHz band is already constrained by international and domestic power flux density (pfd) limits and other existing services, which limits the number of users that can be served, and that any limitations on bandwidth will further affect system capacity.

48. We are convinced that the entire 16.5 MHz of spectrum allocated domestically and internationally at 2483.5–2500 MHz should be assigned to Big LEO system downlinks in the United States. There is no compelling reason to restrict use of this band. Indeed, assignment of the entire band should provide operators with sufficient flexibility to coordinate their operations with other Big LEO systems in the band and to accommodate other users in the band or in adjacent bands with little or no corresponding loss of capacity.

[52] Our plan included both system architectures for two reasons: (1) the record did not support a finding that one architecture is superior to the other, and (2) the plan would permit up to five systems to be licensed, furthering our multiple entry policy.

[53] *See* note 23, *supra*.

[54] Constellation Comments at 19.

[55] Motorola Comments at 47, n. 35.

[56] *See* Final Report of the Majority of the Active Participants of Informal Working Group 1 to Above 1 GHz Negotiated Rulemaking Committee, Annex 1 (Attachment 1 to Committee Report) and Joint Proposal, note 23, *supra*.

Consequently, we will provide CDMA operators with access to the entire allocated 2.4 GHz band. Moreover, only satellite systems using CDMA will be permitted in this band.

d. *Interim plan.* 49. As we discussed in the *Notice*, interference problems between MSS and certain proposed applications on GLONASS, the Russian Global Navigation Satellite System, will not permit co-frequency co-system coverage in the United States and internationally in the 1610–1616 MHz band. Specifically, if GLONASS is used in conjunction with the U.S. Global Positioning System (GPS) to provide aircraft precision approach and terminal communications, as contemplated by the Federal Aviation Administration (FAA), MSS would not be able to operate in the shared band because of the potential for MSS mobile terminal interference into GLONASS mobile receivers.[57] We indicated in the *Notice* that we had initiated inter-agency and international negotiations regarding the use of GLONASS and were encouraged that even if GLONASS were ultimately used to provide services incompatible with MSS, the GLONASS final frequency plan would be changed to bands below 1606 MHz only, making the 1610–1616 MHz band available for MSS operations.[58] We recognized, however, that a GLONASS transition to bands below 1606 MHz may not be completed when the first MSS satellites are launched in the late 1990's. In that case, we stated we would need to develop a transitional plan for MSS migration into the vacated 1610–1616 MHz band "with MSS licensees operating on less than the full amount of their assigned spectrum during the initial phases of their operation."[59]

50. The applicants agree in their Joint Proposal that if GLONASS is not moved in a timely manner, the Big LEO licensees should share the burden of any spectrum loss. They argue, however, that we need not develop a transitional plan now, but, rather, that we should allow the parties to negotiate and reach such an agreement in the event GLONASS compromises MSS operations. Both Motorola and LQP argue in their comments that an interim plan would impede MSS by suggesting to GLONASS equipment manufacturers and other countries that they need not plan for the change in GLONASS frequencies and may lead to the view that revision of the GLONASS frequency plan is optional.

51. Our ongoing discussions with other agencies and with the Russian Federation continue to clarify the GLONASS issue. While we are confident that GLONASS will be moved to bands below 1606 MHz, we do not know when a full transition will occur. At our most recent bilateral discussions, the Russian Federation suggested that a GLONASS migration may not begin until 1998 and may not be completed until 2005.[60] We do not know whether GLONASS operations, before a migration to the final frequency configuration, will affect MSS CDMA systems operating in the lower frequency portion of the 1.6 GHz band, domestically or internationally. This depends upon two related factors: (1) the extent to which domestic and international civil aeronautical agencies and organizations (such as ICAO) use GLONASS to provide approach and terminal communications that are incompatible with MSS operations and (2) the extent to which out-of-band emission limitations may be needed for MSS transmissions.[61] Nevertheless, a portion of the 1.6 GHz MSS frequency band may not be available for first-generation domestic MSS operations. At this time, the most likely worst-case scenario is that the 1610–1612 MHz band segment assigned to CDMA systems in our sharing plan may not be available for initial operations in the United States.[62] This is based on the launch and operation schedules outlined in the various applications.

52. We agree with the applicants that the burden of the potential 2 MHz shortfall should be shared among all 1.6/2.4 GHz MSS licensees. We believe, however, that a transitional plan is warranted. Such a plan will allow system launch to begin without potential delay and without the uncertainty associated with allowing the licensees to attempt to devise an interim plan on an *ad hoc* basis, as the Joint Proposal suggests.[63] In adopting an interim plan, we emphasize that we remain optimistic that the plan will not need to be implemented. Indeed, as provided in the Joint Proposal, all Big LEO operators will be authorized to construct systems capable of operating across the entire band allocated for that system architecture, that is, 1610–1626.5 MHz for CDMA systems and 1616–1626.5 MHz for bi-directional FDMA/TDMA systems. Further, even if the transitional plan is implemented, MSS operators will be permitted to expand into the unused 1.6 GHz MSS frequencies immediately after the GLONASS migration is completed. We believe that any necessary transition among LEO licensees can be completed within six months of that date.

53. Our interim plan is based upon the most recent system designs presented to us in the context of the Negotiated Rulemaking. Four of the CDMA applicants propose to build systems using narrowband 1.25 MHz transmission channels while one—

[57] The FAA and the International Civil Aviation Organization (ICAO) are investigating using the GLONASS and GPS systems in a joint Global Navigation Satellite System (GNSS) that can support the civil aviation community with the integrity that is required to provide for precision approach landings. The Russian Federation is now launching a second generation of GLONASS satellites, GLONASS–M, which is operating over 24 channels in the 1596.7–1620.6 MHz band. GLONASS–M has not been coordinated internationally. Approximately 40 administrations, including the United States, have submitted comments or objections to the ITU Radiocommunication Bureau with respect to GLONASS–M. However, the Russian Federation has been coordinating the GLONASS–M system and has indicated that it has resolved most of the objections by these administrations.

[58] The Russian Federation has indicated a willingness to use channels 0–12 (1602–1608.75 MHz center frequency) commencing in 1998. A guardband of approximately 4 MHz would be required to protect GLONASS–M narrowband signals from ground-based Mobile Earth Station (MES) out-of-band radio frequency emissions on aviation GNSS receivers using GLONASS signals.

[59] *Notice*, note 2, *supra*, at n.59.

[60] The Russian Federation has indicated that it can operate on channels −7 to +6 after 2005 (1598 to 1605.375 MHz center frequency). It has also indicated that it would only use channels 5 and 6 as technical channels over the Russian Federation. When this is implemented, GLONASS's highest effective operational channel will be 1604.25 MHz center frequency. Allowing for a 4 MHz guard band, there will then be no restrictions on MSS in the 1.6 GHz band.

[61] RTCA, Inc., an advisory committee to the FAA, is studying out-of-band emissions from mobile earth stations among other potential interference sources to GNSS receivers. RTCA, Inc. has formed an Ad Hoc Interference Subgroup (AHIS) of Special Committee 159 (SC–159) on Global Positioning Systems. A special Joint Task Group on SATCOM/GNSS Interference is also studying the mutual problems of electromagnetic compatibility of AMSS and GPS/GLONASS equipment operating on the same platforms or on platforms located at very close distances, *i.e.*, airport terminals. *See* para. 137, *infra*.

[62] We note that to the extent MSS systems are launched before 1998, the 1610–1616 MHz portion of the 1.6 GHz band segment might not be available if GLONASS is being used in the GNSS for aeronautical operations. In that case, licensees can begin to implement channels starting from the highest frequency range downwards in conformance with the interim plan. We believe that this should not present significant problems since it will occur at the earliest stages of operations. We also note that it is possible that the FAA will decide not to use GLONASS until it shifts its frequencies to its final configuration. It may be prohibitively expensive for airlines to develop and install equipment using interim standards capable of protecting equipment using GLONASS. In that event, we believe that it is likely that the Russian Federation will advance the date to shift GLONASS frequencies to channel 6 and below as early as possible. The most recent bilateral discussion with the Russian Federation provides for periodic review of this time table and the deployment of the MSS systems in order to resolve any interference.

[63] We will, however, entertain a request for modification of the interim plan if agreed to by all licensees.

TRW—proposes wider 5 MHz channels. If the entire 11.35 MHz assignment designated for CDMA systems were available, the narrowband licensees would be able to operate over 9 transmission channels, while the wider band operator would be able to operate over two. If MSS cannot be provided in the 1610–1612 MHz portion of the CDMA band segment because of GLONASS considerations, two narrowband channels would be lost and one wideband channel would be lost. Allowing CDMA licensees to shift frequencies by 1.25 MHz into the designated TDMA/FDMA band at 1621.35-1626.5 MHz would provide both narrowband and wideband CDMA licensees with access to one additional channel. Consequently, until the entire 1610–1626.5 MHz band is available for MSS operations, we will provide CDMA operators with the option of operating in the 1621.35–1622.60 MHz band segment. In their way, all Big LEO operators will bear some of the necessary operating constraints—the narrow band CDMA operators by the net loss of one channel, the wideband CDMA operators by the loss of one channel or by the need to retune the center frequencies on both of its channels once GLONASS is fully moved,[64] and the FDMA/TDMA licensee by the loss of operating bandwidth. Nevertheless, we are optimistic that these measures will not be necessary or, if they are, that the effect on the MSS industry will not be significant given their short term nature and the anticipated incremental implementation of Big LEO service.

e. *Conditions to the plan*—i. Reduction in spectrum for single CDMA system: 54. Another issue raised by the LEO applicants is our proposed modification to the plan in the event only one CDMA licensee goes forward.[65] In this unlikely scenario, we proposed to reduce the bandwidth assigned to that system automatically from 11.35 MHz to 8.25 MHz. We stated that an 8.25 MHz assignment, or one-half of the available 1.6 GHz MSS allocation, should be sufficient to support a viable system. We noted that the remaining 3.1 MHz of spectrum would be made available to an operational FDMA/TDMA system upon a showing of need or, if this demonstration could not be made, to a new entrant. The four parties to the Joint Proposal suggest that if one CDMA and one FDMA/TDMA system become operational, the 3.1 MHz of spectrum should be available to both of these licensees upon a showing of need and should not be made available to new entrants. In their comments, the CDMA operators argued that an automatic spectrum reduction for a CDMA system with no possibility of adjustment would penalize a CDMA licensee for the failure of another operator to launch a system, that it does not consider the efficiency of the system or whether the CDMA system is sharing spectrum with a foreign system, that it does not give CDMA operators a corresponding opportunity to gain access to bands above 1621.35 MHz upon failure or inefficient spectrum use by the FDMA/TDMA licensee, and that it will seriously impair CDMA operations. They further argued that even if GLONASS is moved, the lower frequency portion of the band is subject to more interservice sharing constraints because of protected radio astronomy operations.

55. The CDMA proponents correctly state that uncertainties are present in the lower portion of the band that are not present in the upper portion. As noted, GLONASS is now operating in 1610–1616 MHz band and we do not know exactly when it will be moved or the limitations its operations will impose on MSS operations. Further, the radioastronomy service (RAS) operates on a co-primary basis in the 1610.6–1613.8 MHz band. The agreement reached by the Negotiated Rulemaking Committee regarding sharing between RAS and MSS imposes restrictions on MSS operations provides certain operating constraints on MSS mobile earth terminals in geographic areas near RAS sites.[66] If RAS sharing proves burdensome or if GLONASS is not fully moved in a timely fashion, an assignment of 8.25 MHz for each of the two LEO system architectures may not prove equivalent. Further, we do not know if, and the extent to which, foreign systems will impact U.S. systems' operations across the entire band. Consequently, we will defer any decision with respect to the 3.1 MHz between 1618.25 and 1621.35 MHz until, and if, either of those contingencies arises. At that time, we will have a clearer notion of the extent of any inter-service sharing constraints in the lower portion of the 1.6 GHz band. We will not, however, limit our consideration for assignment of this band to the two licensed systems, as the parties to the Joint Proposal urge. We do not think it is advisable at this time to preclude new entrants from access to this band. Rather, we will make the decision with respect to the 3.1 MHz, if necessary, in the context of a rulemaking, based upon the circumstances that have developed at that time.

ii. Other potential scenarios. 56. Although not specifically address in the *Notice*, the four parties to the Joint Proposal have developed a plan in the event that only one system retains a construction permit. In this scenario, the Joint Proposal would provide that that system, whether TDMA/FDMA or CDMA, would be given access to the entire 16.5 MHz of bandwidth.

57. We need not decide now on a course of action to be taken in the event that only one Big LEO system is implemented, whether it is a CDMA or TDMA/FDMA system. If and when that occurs, we will weigh a variety of factors in a rulemaking, including our preference for multiple entry, constraints on the assigned spectrum due to international coordination agreements, system efficiency, and system loading, when considering a spectrum adjustment for that system.

f. *System amendments.* 58. Several of the commenters question whether applicants will be permitted to change their system designs when amendments are filed. TRW, for example, asks us to clarify that a change in transmission techniques from CDMA to TDMA/FDMA following adoption of service rules will not constitute a major amendment under Commission rules. This concern apparently stems from Section 25.116(c) of our rules, which provides, in general, that any pending application is to be considered a newly filed application if it is amended by a major amendment after a "cut-off" date. The rule contains several exceptions, including instances where the amendment resolves frequency conflicts with other pending applications, but does not create new or increased frequency conflicts.[67]

59. We have repeatedly emphasized that MSS Above 1 GHz applicants who filed by the cut-off date will be afforded an opportunity to amend their

[64] The additional interim bandwidth of 1.25 MHz (1621.35–1622.60 MHz) would allow TRW to operate two 5 MHz CDMA channels at 1612.60 MHz to 1617.60 MHz and 1617.60 MHz to 1622.6 MHz. If it chooses to do this, it would be required to move these channels to 1610 to 1615 MHz and 1615 to 1620 MHz once GLONASS is moved. This would require the center frequencies on each channel to be shifted or retuned.

[65] Under the terms of each authorization, Big LEO licensees will be required to meet specified implementation milestones for the system. Failure to meet these deadlines will render the authorization null and void. *See* para. 189, *infra*. The bandwidth adjustment discussed here would be triggered only; (1) if no CDMA system is licensed; (2) if only one CDMA system is licensed; or, (3) if more than one CDMA system is licensed and all but one is declared null and void.

[66] *See* paras. 101–109, *infra*.

[67] 47 CFR 25.116(c)(1).

applications, if necessary, to bring them into conformance with any requirements and policies that are adopted for satellite systems in these bands.[68] Thus, a change from a GSO system configuration to a LEO system configuration to meet our satellite system design requirement or a change in coverage patterns to conform with our satellite visibility requirements would be permitted without affecting a particular application's status in this processing group. However, a change that is not necessary to bring the application into conformance with our rules and which would increase frequency conflicts, such as a change from a CDMA to a TDMA/FDMA architecture, would render the application a newly filed application to be considered in a future processing group.[69] We recognize that if all six of the pending applicants are found qualified under our Big LEO rules, our five-system sharing plan will not be able to accommodate all of them. We discuss in a succeeding section of this *Report and Order* the procedures that will apply to applicants in these circumstances and that we will follow to decide among the mutually exclusive applications.[70]

g. *Inter-system coordination.* 60. Several commenters also suggest that we institute formal, but not necessarily codified, procedures or guidelines for CDMA inter-system coordination in the context of adopting a domestic sharing plan. Some suggest that we use the initial sharing proposal submitted to the Negotiated Rulemaking Committee by the CDMA applicants as the basis for a domestic framework. Indeed, the three CDMA applicants participating in the Joint Proposal agree to coordinate their systems in accordance with this framework expeditiously and in good faith.

61. We applaud the CDMA applicants for their good faith efforts to develop a framework for coordination. We have decided, however, not to incorporate these procedures in the Commission's rules. Historically, we have left domestic and separate international system inter-system coordination to the satellite licensees themselves, since they are in the best position to weigh the technical and economic trade-offs inherent in any coordination agreement.[71] This approach has proven successful. Since the CDMA applicants have represented that sharing is feasible, we expect that good faith efforts to resolve any outstanding coordination issues expeditiously in accordance with the Joint Proposal will commence after this *Report and Order* is issued. If the parties believe that any entity is not negotiating in good faith or if an impasse is reached on any issue, we will, upon request, become involved in the process and, if necessary, will devise a solution.

62. Another coordination issued raised by some of the commenters is whether and the extent to which a guardband is necessary between CDMA and TDMA/FDMA systems and, if so, which architecture would bear the burden. The parties to the Joint Proposal have agreed to develop an emissions mask between the CDMA and TDMA/FDMA band segments that spreads the burden between them. LQP, in contrast, suggests that an emissions mask may override the allocations made at WARC-92 because a mask will, in essence, protect Motorola's secondary downlink transmissions in the 1.6 GHz band.

63. We need not resolve this matter now. Rather, while we recognize that secondary services cannot, as a general matter, claim interference protection from harmful interference from stations of a primary service,[72] we will leave the parties free to negotiate a guardband agreement once the technical parameters of their amended system proposals are finalized. If the parties negotiate an agreement that protects secondary operations, we will accept that solution. If the parties cannot agree, however, we will become involved and will look to the Table of Frequency Allocations to determine where any operational constraints are appropriately placed.

3. Plan If Mutual Exclusivity Is Not Resolved

64. We do not intend to continue our already-prolonged attempt to resolve this proceeding by compromise in the event that mutual exclusivity among the Big LEO applicants is not eliminated by amendments submitted by the November 16, 1994 filing deadline, as there is little reason to suppose that further pursuit of that elusive goal would be useful. In the *Notice*, we discussed three alternative procedures—comparative hearing, lottery, and auction—for resolving this proceeding in the event that the proposed sharing plan did not resolve mutual exclusivity and called for comment concerning the feasibility and/or legal availability of each of them. If an auction or lottery[73] was employed, we proposed to divide the spectrum into paired 2.0625 MHz uplink and downlink segments, with eight paired segments available for licensing. We proposed to limit each successful bidder or lottery winner to an award of up to four 2.0625 MHz paired segments, noting that this should provide ample spectrum to support a Big LEO system while allowing for at least two licensees.[74] We conclude that we can lawfully resolve this proceeding by means of an auction and that, of the three, an auction would better serve the public interest.

a. *Comparative hearing.* 65. We continue to believe that the prospect of delay in the initiation of service weighs heavily against use of a comparative hearing, particularly in light of the need for prompt participation by U.S. licensees in international coordination.[75] Whether conflict between Big LEO applications could be resolved through a comparative hearing in less time than is typically consumed in comparative hearings involving applications for broadcast licenses—as TRW, the only commenter advocating use of comparative hearings as a fall-back procedure, contends—is largely beside the point. Even under the most optimistic assumptions, selection of Big LEO licensees through a comparative hearing is likely to take considerably longer than the use of a lottery or competitive bidding.

66. We also believe that a comparative hearing would be inadvisable for other reasons. The Commission has previously stated that comparative hearings would be inconsistent with our aim of affording flexibility to satellite licensees.[76] As a general matter, moreover, we are reluctant to substitute our judgment for the wisdom of the marketplace by dictating outcomes based on assessment of the relative merits of applicants' service proposals. We doubt whether we would be able to resolve all conflicts among LEO applications based on findings that certain of the applications are

[68] *See Notice*, note 2, *supra*, at para. 18 Public Notice, note 16, *supra*.

[69] We note that the three CDMA applicants participating in the Joint Proposal have agreed not to change to a TDMA/FDMA architecture.

[70] *See* paras. 88–97, *infra*.

[71] *See, e.g.*, Hughes Communications Galaxy, Inc., 7 FCC Rcd 4672 (1992), at para. 8; GE American Communications, Inc. 3 FCC Rcd 6871 (1988), at para. 2; Assignment of Orbital Locations to Space Stations in the Domestic Fixed-Satellite Service, 50 Fed. Reg. 35228 (1985), at para. 19; *RDSS Licensing Order*, note 37, *supra*, at para. 19.

[72] *See* note 21, *supra*.

[73] Because the LEO applications were filed prior to July 26, 1993, the Commission is not statutorily prohibited from considering random selection as a licensing option. *See* Section 6002(e) of Pub.L. 103–66.

[74] *Notice*, note 2, *supra*, at para. 45.

[75] *Id.* at para. 40.

[76] *See* Rules to Allocate Spectrum for Mobile Satellite Services, 6 FCC Rcd 4900, 4904 (1991), at paras. 19–20; and Rules to Allocate Spectrum for a Land Mobile Satellite Service, 2 FCC Rcd 485, 487 (1987), at para. 15.

demonstrably technically superior to others. As previously noted, satellite design decisions involve complex trade-offs between engineering, marketing, and financial considerations, which are difficult to evaluate without reference to the functioning of the marketplace.[77] These design decisions are also modified to accommodate regulations, marketplace and financial constraints and uncertainties as these uncertainties become more clearly defined in time.

b. *Lottery.* 67. Constellation is the only applicant that recommends use of a lottery in the event that we cannot accommodate all qualified applicants. It states that it favors this procedure only because it believes that auctions would create unacceptable international ramifications. LQP and TRW, in contrast, maintain that none of the factors listed in the Conference Report on Section 309(i) that would support the use of a lottery procedure is present here.[78] LQP, Motorola, and TRW also contend that a lottery would be inappropriate because the pending applications involve technically diverse, non-fungible proposals. LQP and TRW argue that it would be unfair to the existing applicants, who have invested large sums of money in research and development for their proposals, to choose winners by the luck of the draw. TRW warns that a random selection process here would discourage planning and innovation by future applicants. Motorola objects that the results of a lottery would bear no relation to the best use of the available spectrum and would bestow insufficient spectrum or unusable combinations of spectrum-segments upon the winning applicants.

68. We will not use a lottery in this case because we have concluded that awarding Big LEO licenses through the use of competitive bidding procedures would better serve the public interest. Most importantly, an auction would be an economically efficient means of allocation. A well-designed auction produces an outcome approximating allocation to highest-valued use, which we believe promotes spectrum efficiency and other public interest considerations.[79] Use of competitive bidding procedures would provide participants with the incentive to conceive innovative, cost-effective and spectrum efficient uses for the spectrum-blocks to be assigned and to estimate accurately their potential commercial value. Further, a lottery may produce a haphazard outcome. Although such an outcome might be partially redressed through resale, that would entail further transaction costs. We do not believe that an auction would have significant adverse international ramifications, as discussed below.

c. *Competitive bidding.* 69. *Legality.* Having decided that it would best serve the public interest to use competitive bidding in the event that the sharing plan does not resolve mutual exclusivity, we next respond to arguments concerning our legal authority to do so. Section 309(j) (1) and (2) of the Communications Act, as amended, 47 U.S.C. § 309(j) (1), (2), permits auctions where mutually exclusive applications for initial licenses or construction permits are accepted for filing by the Commission and where the principal use of the spectrum will involve or is reasonably likely to involve the receipt by the licensee of compensation from subscribers in return for enabling those subscribers to receive or transmit communications signals.[80] TRW, however, asserts that "the entire thrust and substance" of the legislation authorizing the Commission to assign licenses by auction is "geared toward" licensing for the personal communication service (PCS) service and that the underlying legislative purposes "simply do not apply to * * * an inherently global * * * satellite service [for which] there are currently no more than six applications." However, nothing in Section 309(j) precludes the use of auctions for satellite services, and the scope of our Section 309(j) authority to use auctions clearly is not limited to PCS licensing.[81] Indeed, we have decided to use auctions for many services besides PCS.[82] Nor does Section 309(j) withhold authority to use auctions for licensing international satellite systems or specify a minimum number of competing applications for a class of licenses that must be on file in order for licenses to be assigned by competitive bidding.

70. Constellation, Motorola and LQP contend that the statute forbids us from conducting an auction until we have used every means to attempt to eliminate mutual exclusivity. Motorola and LQP cite commentary in the House Report and in a letter from Congressman Dingell to then-Chairman Quello as evidence that Congress "clearly had the Big LEO proceeding in mind when it added this language to the bill" and that it believed that mutual exclusivity could be avoided in this proceeding. Further, TRW and COMSAT cite this commentary as proof that Congress enacted Subsection 309(j)(6)(E) to prevent the Commission from using an auction to assign Big LEO licenses.

71. Nothing on the face of Subsection 309(j)(6)(E), or in its legislative history, indicates that we are prohibited from granting Big LEO licenses by auction. The text of the Section merely provides that the Commission should continue to use techniques that avoid mutual exclusivity among applicants. Similarly, the commentary in the House Report states that it generally serves the public interest for the Commission to use engineering solutions and other mechanisms to avoid or eliminate mutual exclusivity and that the Commission should continue to do so in the Big LEO licensing proceeding. The Report does not assert, however, that if the Commission is unsuccessful in resolving mutual exclusivity, the legislation bars the Commission from auctioning Big LEO licenses. Rather, we construe the provision to mean that the Commission is obliged to attempt to eliminate mutual exclusivity. Indeed, if the Commission could avoid mutual exclusivity in every instance in which it arises, no need would exist for the Commission's auction authority. In the course of this proceeding, we have proposed several spectrum sharing plans to that end.[83] We do not think that it would serve the public interest to continue this effort in the event that the six applications before us, as amended

[77] 2 FCC Rcd at 487, para. 15.

[78] *See* 47 U.S.C. 309(i). *See also* H.R. Conf. Rep. No. 765, 97th Cong., 2d Sess, at 37 (1982).

[79] Second Report and Order in the Implementation of Section 309(j)—Competitive Bidding, 9 FCC Rcd 2348, 2361 (1944) (*Implementation of Section 309(j)*, at para. 73. Moreover, an efficient auction would award licenses more quickly to those that value them most highly and would facilitate the efficient aggregation of interdependent licenses. We also note that the applicants here did not submit their proposals in reliance on an expectation that the Commission would use lotteries.

[80] No commenter disputes the holding in para. 42 of the *Notice* that Big LEO service will involve a "use of the electromagnetic spectrum" as defined in 47 U.S.C. 309(j)(2), notwithstanding that most of the applicants propose to provide service to resellers rather than end-users. As we noted previously, the legislative record indicates that it is irrelevant to the applicability of the 309(j)(2) definition whether a licensee's subscribers are end-users or resellers, and we believe that understanding is consistent with the plain meaning of the pertinent statutory text.

[81] The legislative record confirms that proponents of the legislation were well aware that it did not merely pertain to PCS licensing. *See* H.R. Report No. 103–111, 103d Cong., 1st Sess., at 256 (1993) ("[S]ection 309(j) is a generic statute that will govern the issuance of licenses in many different services"). *See also Implementation of Section 309(j)*, note 79, *supra*.

[82] For example, auctions will be used to award licenses in the 900 MHz Specialized Mobile Radio Services and the Multipoint Distribution Services. *See* 47 CFR 1.2102(a).

[83] *See, e.g.*, Committee Report, Addendum 1 (proposal developed by FCC Representative to the Committee that would have permitted all proposed systems to be licensed with some design modifications); *Notice*, note 2, *supra*, at para. 38.

in response to this *Report and Order*, are mutually exclusive.

72. Regardless of our general authority to conduct an auction in the Big LEO service, TRW contends that we may not auction the allocated 2.4 GHz band downlink frequencies because the pending applications for these frequencies are not mutually exclusive. According to TRW, all four applicants desiring to use the 2.4 GHz band could do so on a shared basis using the CDMA technology that all of them propose.[84] Similarly, since the same four applicants are the only ones proposing to use the lower six MHz of 1.6 GHz band, TRW argues that we cannot use auctions to assign authorizations for that frequency range either. As TRW sees it, the only portion of the Big LEO spectrum that we can auction consistently with the mutual exclusivity proviso of Subsection 309(j)(1) is the sector of the 1.6 GHz band between 1616–1626.5 MHz, where both Motorola and the CDMA proponents have competing applications on file.

73. We do not agree with TRW that Subsection 309(j)(1) bars us from using an auction to award licenses for the lower portion of the 1.6 GHz band. There is simply not enough spectrum in the band to accommodate all pending applications. While we recognize that there are certain portions of the spectrum in which sharing among CDMA systems is possible (*i.e.*, the 1610–1616 MHz and the 2483.5–2500 MHz bands), these frequencies cannot in themselves accommodate all proposed CDMA systems, including AMSC's. Consequently, these bands cannot be separated from the rest of the MSS frequencies in determining whether mutual exclusivity exists and whether auctions can be employed. Moreover, we are not proposing to conduct an auction until after the applicants have had an opportunity to amend their applications to conform with our rules. If our spectrum sharing plan does not then accommodate the systems of all qualified applicants, the plan will not be implemented. Rather, the 1.6 GHz band spectrum would be segmented and the qualified applicants will be required, in order to preserve their eligibility, to apply for a separate license for each segment that they want to use. Consistent with the mutual exclusivity prerequisite of Subsection 309(j)(1), in the event that only a single eligible application is filed for a particular segment within the filing window, the segment will be assigned to the applicant requesting it. We would not assign the license for a segment through competitive bidding unless two or more eligible applications for it were on file. Winners would be permitted to employ their choice of CDMA or TDMA/FDMA architectures.

74. We do agree with TRW that there is no need to assign 2.4 GHz band authorizations by competitive bidding. Because CDMA systems must use 1.6 GHz uplink and corresponding 2.4 GHz downlink frequencies to operate, we proposed in the *Notice* to pair 1.6 GHz and 2.4 GHz spectrum blocks for auctioning.[85] All applicants requesting authority to use the 2.4 GHz band concede that they can share it using CDMA technology, however. We therefore conclude that would be more appropriate to license all winners of auctioned 1.6 GHz spectrum blocks to operate in the space-to-Earth transmission direction in the 2483.5–2500 MHz band on a shared basis using CDMA techniques.

75. TRW contends that dividing sharable spectrum into segments and assigning a license for each segment to the highest bidder, as we proposed in the *Notice*, rather than assigning co-extensive licenses for the entire bandwidth to as many as could share it, would be "spectrum-inefficient" and therefore "manifestly contrary to the auction legislation." Constellation likewise asserts that assigning licenses for discrete segments of the Big LEO spectrum by competitive bidding would probably eliminate any chance of CDMA sharing, as auction winners would probably not consent to share use of their licensed segments with competing service providers. Constellation, accordingly, contends that such a licensing procedure would not promote efficient spectrum use. Similarly, LQP asserts that assigning Big LEO licenses by auction would deter multiple entry and competition.

76. We do not agree that auctioning the 1.6 GHz band in band segments would disserve the statutory objectives of promoting competition and efficient spectrum use. First, it is not clear that using an auction licensing mechanism would discourage spectrum sharing. Applicants who obtain licenses for band segments by competitive bidding could negotiate post-auction sharing agreements among themselves and request license modifications, as TRW acknowledges in its comments.[86] If, in fact, the potential economic value of some or all of the available 1.6 GHz band could best be realized through frequency sharing, licensees will have an incentive to enter into such mutually beneficial sharing agreements, no matter how they acquire their licenses. Second, there is no evident reason to conclude that competitive bidding would impede competition. Our auction rules will ensure that there will be at least two providers. Further, by dividing the available bandwidth into relatively small segments and allowing bidders to acquire several segments and aggregate them, the number of initial licensees and the amounts of spectrum held by particular licensees will be determined largely by market forces.

77. We recognize it is possible that an auction might result in fewer licensees than could otherwise have been accommodated using a sharing plan. As discussed above, however, we have been unable to develop a sharing plan that avoids mutual exclusivity, assuming all applicants are deemed qualified. If mutual exclusivity cannot be avoided by sharing, implementing an auction may achieve countervailing public interest benefits. As we have explained, assigning spectrum rights to those who place the highest value on them generally serves the public interest because it ensures an award to the highest-valued use.

78. We do not agree with LQP that using auctions is contrary to our established policy of favoring multiple entry in new satellite services. We have ensured that our competitive bidding framework will result in at least two licensees, thereby ensuring the benefits of a competitive market structure.[87] Moreover, insofar as our policy permits marketplace incentives to determine the number of service providers, the policy is fully consistent with our "open skies" satellite policy, which was based on similar considerations.[88]

79. TRW also suggests that we may not lawfully use an auction to assign Big LEO licenses because of the statutory mandate concerning promotion of economic opportunity. TRW claims, for instance, that the statute requires the Commission, consistent with the public interest and the characteristics of the proposed service, to "prescribe * * * bandwidth assignments that promote * * * economic opportunity for a *wide variety* of applicants" (emphasis

[84] LQP contends, moreover, that segmentation of the 2.4 GHz band pursuant to the tentative auction plan outlined in the NPRM would be impracticable because any CDMA system would require use of all 16.5 MHz of the available 2.4 GHz band, whether it intends to share that spectrum in common with other CDMA systems or to use it exclusively.

[85] *Notice*, note 2, *supra*, at para. 45.

[86] TRW Comments at 102–103.

[87] *See* para. 89, *infra*.

[88] Domestic Communications Satellite Facilities, 22 FCC 2d (1970), 35 FCC 2d 844 (1972), *recon. in part*, 38 FCC 2d 665 (1972) (*DOMSAT I, II*, and *III*, respectively).

added),[89] which is impossible here given the number of Big LEO licenses that can be awarded. TRW further asserts we cannot meet the statute's requirements to afford opportunity for small businesses, businesses owned by members of minority groups or women, and rural telephone companies, since there are no representatives of those "designated entity" (DE) classes among the existing applicants, that it is virtually impossible for a company qualifying as a small business to raise enough capital to finance construction and operation of a Big LEO system, and that it would be a daunting task to devise a system of viable set-asides for designated entities without drastically impairing the ability of other applicants to implement service.

80. Subsection 309(j)(3) requires the Commission to seek to promote "economic opportunity and competition," among other goals, "by disseminating licenses among a wide variety of applicants, including [DEs]," and Subsection 309(j)(4)(D) directs us to ensure, when prescribing regulations governing auction procedures or eligibility to apply for licenses to be assigned by auction, that DEs are given an opportunity to participate in the provision of spectrum-based services. The statute, however, directs the Commission, in specifying auction procedures, to pursue other objectives, aside from ensuring opportunity for DEs. Among these are the goals of promoting "the development and rapid deployment of new technologies, products, and services for the benefit of the public, including those residing in rural areas, without administrative or judicial delays"and of promoting "efficient and intensive use of the electromagnetic spectrum." 47 U.S.C. § 309(j)(3). In the *Notice*, we tentatively concluded auctions would further these objectives and we affirm these conclusions on this *Report and Order*.[90] The statute also implicitly leaves it to the Commission to strike a balance in the public interest among the statutory objectives.[91] Here, only six applications are being considered. No one disputes TRW's assertion that none of the applicants qualifies as small, minority-owned or women-owned.[92] It therefore would appear that to disseminate Big LEO licenses to DEs we would have to open a new filing window for Big LEO applications.[93] While in some circumstances it might be feasible to take such an approach, we believe that it is not the case here. To ensure that this needed service is made available as quickly as possible, particularly to rural residents not otherwise served by the telecommunications infrastructure, and to preserve the opportunity for the United States to continue its leadership role in promoting global development through an enhanced global information infrastructure, we are committed to awarding licenses by January 31, 1995.[94] Opening a new filing window would make that goal impossible. Potential new applicants would need a reasonable amount of time, traditionally three months from the date of publication in the **Federal Register**, in which to develop and submit system proposals.[95] Opening a new filing window also would be inequitable to the pending applicants, who filed their proposals well before Section 309(j) was enacted and who have spent considerable time and expense participating in this proceeding. In light of these considerations, we believe that an auction to award Big LEO licenses is an appropriate exercise of our discretion.

81. *Other considerations.* In the *Notice*, we recognized that although auctions appear advantageous for many reasons, the approach might have unintended consequences internationally. In particular, we noted that other countries may look to our lead in imposing these costs on Big LEO systems.[96] Given the number of countries that may be served by Big LEO systems, we stated that these costs may be considerable and may preclude a U.S.-owned system from serving other countries. We noted, however, that these costs may not in fact be significant in countries that seek to ensure that voice MSS is available within its borders. We further noted that applicants will pay no more than that which they determine is consistent with their expected revenues from providing service in that country. Nevertheless, we recognize that the international nature of the Big LEO service raises concerns that are not applicable to the domestic-only services for which auctions are implemented and requested comment on this issue.

82. Motorola, Constellation, LQP, TRW, and COMSTAT all contend that an auction is inadvisable because it would set a bad example for foreign governments. If foreign governments were to use auctions to assign spectrum rights, they maintain, the cost of providing global MSS would be driven up, possibly to such an extent that Big LEO operators would be unable to provide worldwide service. TRW asserts that the consequent cost increases might deter most potential entrants, to the impairment of competition, or might even make it infeasible for anyone to provide Big LEO service. COMSAT speculates that foreign governments might conduct auctions in a manner that places U.S. companies at a disadvantage.

83. The comments have provided no concrete evidence, however, that an auction would have these harmful effects. We have concluded elsewhere that, as a general matter, the public interest is served by awarding licenses to those who assign the highest value to them.[97] In light of these substantial public interest benefits, the commenters' mere recitals of the concerns we raised in the *Notice* do not persuade us that auctions are inadvisable.

84. We doubt, first, that our choice of licensing method for the Big LEO service will determine foreign licensing practices as much as the commenters predict. Foreign officials already know that we recently obtained a statutory mandate for assigning spectrum licenses by competitive bidding and have decided to assign licenses of enormous aggregate commercial value for a variety of new services by that means. We assume that those responsible for assigning spectrum rights in other countries will conduct spectrum auctions if that would best serve the interests that they are obligated to promote, regardless of what we choose to do in this proceeding. Further, even if auctions are implemented, applicants will bid no more at an auction than that which they determine is economically feasible.

85. Conversely, TRW contends that if we assign Big LEO licenses at auction and foreign authorities issue such licenses to others free of charge, the U.S. licensees would be at a competitive disadvantage in the global market. Constellation similarly maintains that by assigning the licenses at auction the Commission "would create an incentive

[89] 47 U.S.C. 309(j)(4)(c).

[90] *See Notice*, note 2, *supra*, at para. 43.

[91] *See Implementation of Section 309(j)*, note 79, *supra*, at para. 74.

[92] *See* Docket 93–253 for criteria.

[93] DEs can, of course, participate in the Big LEO industry by leasing space segment capacity, by manufacturing user handsets, or by offering services to end users.

[94] *See also* note 6, *supra*.

[95] *See NVNG MSS Order*, note 48, *supra*. *See also RDSS Licensing Order*, note 37, *supra*, where licensee was given six months to amend its applications to conform to rules as adopted.

[96] *Notice*, note 2, *supra*, at para. 44.

[97] *Implementation of 309(j)*, note 79, *supra*, at paras. 73–74 and n.65.

for U.S. companies to develop LEO technology through foreign based systems that did not have to spend significant amounts of capital for operating licenses." TRW also contends that companies who purchase MSS licenses in the United States at auction might encounter unfair competition from INMARSAT because the INMARSAT Convention and the Communications Satellite Act might be construed to require that COMSAT be allowed to access INMARSAT capacity from the U.S. without paying for spectrum use.

86. We do not believe the prospect that auctions will be conducted only in the United States would disadvantage U.S. licensees globally. We have not yet decided whether, and the terms on which, foreign providers, including INMARSAT, will be able to provide domestic service. We envision that reciprocal bilateral arrangements on a country-by-country basis will be negotiated. In reaching and implementing these arrangements, we will consider at that time whether foreign entities not subject to U.S. auctions would have the economic incentive and ability to offer domestic service at significantly lower rates than Big LEO operators who purchased spectrum. Further, under this scenario, both U.S. and foreign operators appear able to receive licenses free of charge in a foreign country. We fail to see how this would put U.S. operators at a "global disadvantage." Finally, contrary to Constellation's argument, we see no reason to suppose that applicants who could compete successfully as providers of Big LEO service in the U.S. market would lose interest in developing systems in the United States merely because it would be necessary to purchase licenses. If it would be undesirable to serve the U.S. market at high spectrum prices, the prices paid at an auction should fall until serving the U.S. market is commercially desirable.

87. Consequently, we conclude that we have the statutory authority to award Big LEO licenses through an auction process. We will implement competitive bidding procedures in the event that all six pending applicants file amendments on November 16, 1994 that meet all requirements, including financial requirements, for the Big LEO service, but their applications are still mutually exclusive.[98] We place applicants on notice that if an auction needs to be held it will be scheduled as quickly as possible. Given the importance of proceeding with Big LEO licensing, preparation time for the applicants will necessarily be circumscribed.

d. *Competitive bidding procedure.* 88. *Segmentation.* As proposed in the Notice, we will divide the 1.6 GHz band spectrum into eight 2.0625 MHz segments.[99] We recognize that Constellation and LQP assert that a 2.0625 MHz block is "unworkable" because it is inconsistent with some of the applicants' channelization plans, which proposed 1.25 MHz channels. Further, LQP asserts that any auction of discrete bandwidth segments within the 1.6 GHz band would inevitably result in some applicants getting unusable, disjointed spectrum blocks. We do not believe these concerns warrant a change in the proposed spectrum blocks. First, two of the six applicants do not propose to use 1.25 MHz channels. Moreover, any anomalies in spectrum awards can be corrected in post-auction transactions, as we intend (as explained *infra*) to allow the licensees to aggregate and disaggregate spectrum through resale.

89. *Bandwidth cap.* To ensure that there are at least two Big LEO providers, we will not permit any applicant to acquire more than four 2.0625 MHz band segments in the 1.6 GHz band, *i.e.*, no more than 8.25 MHz, at auction.[100] We would also deny permission for a post-auction transaction that would result in an accumulation in excess of that limit in the absence of a compelling showing of justification for a waiver.

90. *Competitive Bidding Design.* In determining the procedures to be employed if an auction of Big LEO licenses is necessary, we are guided by the principles developed in PP Docket No. 93–253, the proceeding instituted to implement Section 309(j) of the Communications Act. The *Second Report and Order* in that proceeding[101] established the criteria to be used in selecting the auction design method to use for each particular actionable service. The Commission received voluminous comment on auction design issues. Generally, we concluded that awarding licenses to those parties who value them most highly will foster Congress' policy objectives. In this regard, we noted that since a bidder's ability to introduce valuable new services and to deploy them quickly, intensively, and efficiently increases the value of a license to that bidder, an auction design that awards licenses to those bidders with the highest willingness to pay the most tends to promote the development and rapid deployment of new services and the efficient and intensive use of the spectrum. In articulating our auction design principles we agreed with the weight of the comments in that proceeding—many of which were supported by academic auction design experts—that: (1) licenses with strong value interdependencies should be auctioned simultaneously; (2) multiple round auctions generally will yield more efficient allocations of licenses and higher revenues, especially where there is substantial uncertainty as to value because they provide bidders with information regarding other bidders' valuations of licenses; and (3) since they may be relatively expensive to implement and time-consuming, simultaneous and/or multiple round auctions may become less cost-effective as the value of licenses decreases.[102]

91. Based on the foregoing, we concluded that where the licenses to be auctioned are interdependent and their value is expected to be high, simultaneous multiple round auctions would best achieve the Commission's goals for competitive bidding.[103] We indicated that compared with other bidding mechanisms (such as sequential and sealed bid auctions), simultaneous multiple round bidding will generate the most information about license values during the course of the auction and provide bidders with the most flexibility to pursue back-up strategies. Thus, we concluded that simultaneous multiple round bidding is most likely to award interdependent licenses to the bidders who value them most highly. We also indicated that this method will facilitate efficient aggregation of licenses across spectrum bands, thereby resulting in vigorous competition among several strong service providers who will be able rapidly to introduce a wide variety of services highly valued by end users.[104] In addition, we concluded that because of the superior information and flexibility it provides, this method is likely to yield greater revenues than other auction designs. Thus, we found that the use of simultaneous multiple

[98] If some applicants defer their financial showings as described in para. 13, *supra*, all deferred applications may not be able to be granted. If, at that time, we have issued some licenses, we will not implement the auction procedure described below, which assumes that none of the MSS spectrum has been assigned, to choose among the mutually exclusive deferred applications. Rather, as noted, we will develop another processing procedure at that time.

[99] As discussed in the *Notice*, it appeared that as little as 2.0 MHz of spectrum could provide an individual CDMA system with the same capacity as it would have operating on a shared basis over 11.35 MHz of spectrum. *See Notice*, note 2, *supra*, at para. 45.

[100] *See Notice*, note 2, *supra*, at para. 45.

[101] Note 79, *supra*.

[102] *Id.* at para. 69.

[103] *Id.* at paras. 109–111.

[104] *Id.* at para. 106.

round auctions would generally be preferred.[105]

92. Because, however, simultaneous multiple round bidding is likely to be more administratively complex and costly both for bidders and for the FCC than sequential or single round bidding, we indicated that we would use this auction design only where license values are interdependent and the expected value of the licenses to be auctioned is high relative to the costs of conducting a simultaneous multiple round auction.[106]

93. If it becomes necessary to employ competitive bidding procedures to award Big LEO licenses, we will conduct a single simultaneous multiple round auction to award licenses in those 2.065 MHz bands for which two or more applications have been filed.[107] Each of the characteristics that lead to selection of this auction design are present here. We expect that there will be a high degree of interdependence in the values of Big LEO licenses. Licenses may be interdependent either because they are substitutes or because they are worth more as part of a package than individually. We would expect there to be some substitutability among these licenses. There may be important ways in which they might be complements as well. Though all will be nationwide licenses, a single entity will be able to aggregate up to four licenses. It is reasonable to assume that the value that a bidder places on one license will to at least some degree depend upon whether it will be able to acquire other licenses. We also expect that the value of Big LEO licenses will be high relative to the costs of conducting a simultaneous multiple round auction, in part because as the Commission gains experience with simultaneous multiple round auctions, the costs associated with implementing them may fall.

94. *Procedural, Payment and Penalty Issues.* Through our July 1994 auction of nationwide licenses to provide Personal Communications Services in the 900 MHz band (narrowband PCS), we have gained some experience with simultaneous multiple round auctions. It appears that the rules we adopted concerning the procedures to be used in conducting auctions, the schedule for payment for licenses, and the penalties to be paid for bid withdrawal, default or disqualification, have worked well.[108] In the event that it becomes necessary to employ competitive bidding in Big LEO licensing, we will conduct auctions as specified under those rules. If such an auction is required, we will issue a Public Notice explaining further the administrative details of the auction, but we generally expect the auction will be conducted similarly to the nationwide narrowband PCS auction.

95. In order to reduce the risk of defaults and to ensure that the Commission has a ready source of funds to satisfy any bid withdrawal or default penalties, we will impose a requirement that, to be qualified to participate in the Big LEO auction, applicants must submit an upfront payment to the Commission prior to the auction.[109] Consistent with our auction rules for Personal Communications Services, we have decided to set the upfront payment at approximately two cents per MHz of spectrum per person residing in the proposed service area ($0.02 per MHz-pop).[110] Because Big LEO systems must be able to provide service to all areas of the fifty states, $0.02 per MHz-pop would amount to approximately $10 million per 2.0625 MHz segment.[111] For simplicity, we will round this to the nearest million, and require an upfront payment of $10 million.

96. ***Resale, aggregation and disaggregation.*** Aside from imposing the 8.25 MHz cap on aggregation, we will not restrict auction winners from reselling 1.6 GHz band spectrum-rights. They would be free not only to resell 2.065 MHz segments but also to reassign any smaller portion of 1.6 GHz band spectrum. Affording such flexibility enhances beneficial incentives.[112] Although we do not think that such post-auction transactions would be likely to entail unjust enrichment,[113] applications for consent to assignment of Big LEO spectrum authorizations obtained by auction will be subject to the disclosure and close-scrutiny policies delineated in the Second Report and Order in the auction rulemaking.[114]

97. *Assignment of 2.4 GHz band.* As previously noted, all auction winners will be authorized to operate over the entire 2483.5–2500 MHz band, with the stipulation that operation in that band must be in the CDMA mode and must be used for downlink transmissions.

B. Interservice Sharing

98. In the *Notice*, we recognized that Big LEO systems will be required to share the 1.6/2.4 GHz and adjacent frequency bands with a number of existing services. In the 1.6 GHz range, the 1610–1626.5 MHz band is allocated to the aeronautical radionavigation service (ARNS) on a co-primary basis, and a segment of the band, at 1610.6–1613.8 MHz, is allocated to the radioastronomy service (RAS) on a co-primary basis. In the 2.4 GHz range, the 2483.5–2500 MHz band is allocated for co-primary use by the broadcast auxiliary service, by the terrestrial fixed-service and by industrial, scientific and medical (ISM) operations. Adjacent bands are allocated to the aeronautical radionavigation satellite service, the instructional television fixed service (ITFS) and the multi-channel multi-point distribution service (MMDS).

99. The Negotiated Rulemaking Committee was comprised of Big LEO applicants and representatives of most parties potentially affected by Big LEO services, and analyzed extensively interservice sharing at 1.6/2.4 GHz. We used the Committee's recommendations as the primary basis the proposals in our *Notice*. We sought comment on those proposals as well as those areas where a representative of an affected interest did not participate in the Committee, or where the Committee could not reach a consensus on an interservice sharing issue.

1. Radio Astronomy Service

100. As noted above, the 1610.6–1613.8 MHz frequency band is allocated to the RAS on a co-primary basis.[115] RAS operations involve the reception of radio waves of cosmic origin,[116] and are responsible for amassing a substantial portion of information about the universe that has been acquired in the last sixty years. Because the RAS involves only radio reception, it cannot interfere with other services operating in the same frequency band. However, it can receive harmful interference from other services. As a co-primary service, the RAS is entitled to protection from harmful interference. Ensuring this protection is complicated by the nature of cosmic radiation emissions, which are similar to random noise emissions and have extremely low power flux density levels at the Earth. Further,

[105] *Id.*

[106] *Id.* at paras. 110–111.

[107] *See* para. 73, *supra*.

[108] *See* Sections 1.2104–1.2109 of the Commission's Rules, 47 CFR 1.2104–1.2109.

[109] The upfront payment will be fully refunded to unsuccessful bidders who are not subject to bid withdrawal or default penalties.

[110] *See Implementation of Section 309(j)*, note 79, *supra*, at para. 169 and 47 CFR 1.2106.

[111] *I.e.*, .02 × 2.0625 × [U.S. pop.]

[112] Of course, parties to such transactions must comply with 47 U.S.C. 310(d) by filing applications for consent to assignment.

[113] *See Implementation of Section 309(j)*, note 79, *supra*, at paras. 211–12.

[114] *Id.* at para. 214.

[115] The 4990–5000 MHz band is also allocated to the RAS on a primary basis. Second harmonic spurious emissions from 2.4 GHz MSS operations could cause interference of RAS in that band. *See* paras. 120–121, *infra*.

[116] *See* International Radio Regulations 55 and 14.

there is a potential for both in-band and out-of-band interference.[117]

a. *In-band interference to the RAS.*

101. The Committee was able to agree on procedures that would permit sharing between Big LEOs and the RAS. The Committee's task was made somewhat easier by the fact that radio astronomy observations are usually conducted in remote areas and are not always continuous. The Committee's proposal, developed cooperatively with the Committee on Radio Frequencies (CORF),[118] would establish fixed-radius protection zones around the sixteen radio astronomy sites in the United States and technical requirements for MSS downlink transmissions. Based on this recommendation, we proposed to establish protection zones around radio astronomy sites in the United States as a means of preventing MSS transmissions from interfering with RAS observations in the 1610.6–1613.8 MHz band.[119] To that end, we also proposed that "all 1.6/2.4 GHz MSS systems shall be capable of determining the position of MSS user transceivers accessing the space segment through either internal radiodetermination calculations or external sources such as LORAN–C or GPS."[120]

102. Big LEO parties generally agree with the fixed-radius protection zone approach. However, both TRW and Constellation question whether it is necessary to require all MSS systems to be capable of determining the position of their user terminals.[121] They contend that a position location requirement need not be imposed on those MSS systems that elect to use beacon-actuated protection systems as a means for avoiding harmful interference to RAS observations.

103. As we stated in the Notice, the Committee decided that a beacon actuated protection system might provide an alternative to fixed radius protection zones. Under such a system, a beacon would transmit a signal when RAS observations were in progress. Upon receipt of this signal, an MSS control center would automatically assign the MSS terminal to a communications channel outside of the shared MSS–RAS frequency band. The Committee concluded, however, that several theoretical and practical concerns must be addressed before a beacon system can be implemented.[122] CORF continues to support that position.[123]

104. Because beacon actuated protection systems are not yet fully developed, we will adopt our original proposal that requires MSS operators to protect RAS observations in the 1610.6–1613.8 MHz band using the fixed-radius protection zone method. Nevertheless, because we expect that more efficient solutions will be developed, we will permit MSS licensees to use smaller geographic protection zones in lieu of the specified areas upon a showing that MSS operations will not cause harmful interference to an RAS observatory during periods of observation.[124] We will, however, as proposed, allow beacon-actuated protection zones to be used in lieu of fixed protection zones if a coordination agreement is reached between a mobile-satellite system licensee and the Electromagnetic Spectrum Management Unit (ESMU) on the specifics of beacon operations."[125] Should any of the Big LEO licensees show at a later time, and coordinate with the ESMU, that certain other methods can be used in lieu of the fixed-radius protection zone, we will allow MSS system operators to employ these methods. In the interim, however, position determination of MSS user transceivers is necessary to accomplish fixed-radius zone protection. Therefore, we adopt as part of § 25.213(a)(1), the MSS user transceiver position determination requirement as proposed in the Notice.

105. In the Notice, we also proposed that MSS user transceivers be capable of terminating operations as soon as practicable upon entering an RAS protection zone.[126] LQP argues that our proposal would require that calls initiated outside of an RAS protection zone be terminated as soon as the MSS user transceiver moves within the protection zone, which, according to LQP, would be inordinately complex and costly.[127] LQP suggests that our rules should permit the call to be switched successfully to frequencies outside of the RAS bands (during RAS observations) before operations are terminated to that unit.[128]

106. We believe that LQP's suggestion is reasonable. Allowing calls initiated prior to entering an RAS protection zone to continue until a non-RAS frequency is found will ensure continuity of service to the MSS user. Further, we believe that other requirements that we are adopting, such as the notification requirement that is described below, will ensure that RAS operations are not affected adversely. Therefore, we modify proposed § 25.213(a)(1)(v) as suggested by LQP.

107. We also proposed in the Notice to require that the ESMU notify MSS licensees in the 1610.6–1613.8 MHz band of radio astronomy observations.[129] This requirement was proposed to ensure that MSS operations terminate as soon as possible after an MSS user transceiver enters a RAS protection zone where observations are being made. CORF suggests that it could meet this requirement by providing MSS operators with schedules of RAS observations.[130] TRW disagrees, stating that CORF should be required to provide notification "of periods of actual radio astronomy observations rather than a general schedule."[131] We agree with TRW that it would not be overly burdensome for the ESMU to notify the small number of licensed in-band Big LEO operators of periods of actual RAS observations. This will help ensure that no interference is caused to RAS observations in the event that a schedule is changed.

108. In a related matter, Motorola notes that the Committee suggested that RAS observations not be scheduled during peak MSS/RDSS traffic periods to the extent possible.[132] CORF does not object to this proposal.[133] RAS observations are usually carried out in remote areas and are not continuous. Even during peak MSS traffic periods, the majority of MSS traffic should not occur in RAS observation areas. We do not therefore believe that adherence to this provision will be burdensome to RAS. Consequently, we include this provision in our rules in § 25.213(a)(4).

109. Finally, TRW requests that we agree to solicit public comment before we require MSS systems to protect

[117] An out-of-band emission is radio frequency energy, located on a frequency or frequencies immediately outside the necessary bandwidth, that result from the modulation process. This does not include spurious emissions, which may be reduced without affecting the corresponding transmission of information. *See* 47 CFR 2.1.

[118] CORF operates under the auspices of the National Academy of Sciences and is responsible for advancing the interest of radio astronomy in the United States.

[119] *See* proposed § 25.213(a)(1)(i)–(iii).

[120] *See* proposed § 25.213(a)(1).

[121] TRW Comments at 120, Constellation Reply at 43.

[122] *Notice*, note 2, *supra*, at n.90.

[123] CORF Reply Comments at 4.

[124] *See* § 25.213(a)(1)(v).

[125] *See* § 25.213(a)(1)(vii). The ESMU falls under the auspices of the National Science Foundation and is responsible for coordinating RAS frequencies.

[126] *See* proposed § 25.213(a)(1)(v). *Notice*, note 2, *supra*, at para. 50.

[127] LQP Reply at 58.

[128] LQP Comments at 64.

[129] *See* proposed § 25.213(a)(1)(v).

[130] CORF Comments at 4–5.

[131] TRW Reply Comments at 72.

[132] Motorola Comments at 55, n. 41.

[133] Specifically, CORF supports insertion of the following text in the rules: "The RAS shall avoid scheduling radio astronomy observations during peak MSS/RDSS traffic periods to the greatest extent practicable." *See* CORF Reply at 2.

additional RAS sites beyond the sixteen sites specified in the rules.[134] In bands shared by two or more services on a co-primary basis, new facilities in either service must be coordinated among affected operators. As provided for in proposed rule § 25.213(1)(a)(viii), which we adopt, we will solicit comment with respect to protection from additional RAS sites.

b. *Out-of-band interference to RAS from primary MSS uplinks at 1.6 GHz.* 110. In the Notice, we also recognized that MSS uplink operations in the 1613.8–1626.5 MHz portion of the band could cause unacceptable out-of-band interference into RAS operations at 1610.6–1613.8 MHz. We also noted the Committee's suggestion to establish fixed protection zones similar to, but smaller than, those recommended for in-band emissions, although we did not propose a rule in this regard.[135]

111. CORF suggested several alternatives to our proposals:[136]

(1) To require that the power flux density (pfd) level reaching RAS sites from a mobile user terminal operating anywhere in the 1610–1626.5 MHz band not exceed the pfd from a mobile user terminal operating within the RAS 1610.6–1613.8 MHz band segment at the edge of the protection zone applicable for that site, or

(2) To prohibit mobile terminal operations within the 1613.8–1615.8 MHz band during RAS observations within protection zones of 100 km or 30 km around RAS sites depending upon the type of observatory involved.[137]

112. The MSS parties generally oppose restrictions on out-of-band emissions for the purpose of protecting RAS. For example, Constellation argues that MSS out-of-band levels should not be unilaterally defined by the radio astronomy community without any regard to the impact those levels would have on other services.[138] TRW states that it could agree to CORF's suggestions if a compliant mobile user terminal were not required to undertake further coordination with the RAS. TRW notes, however, that CORF's out-of-band protection proposals would relegate MSS to co-primary or even lower status in frequency bands that are not allocated to the RAS."[139] Only LQP generally agrees with CORF's suggestion. According to LQP, there is sufficient 1.6 GHz band spectrum to switch MSS users near RAS sites from potentially interfering channels to channels separated from RAS observations.[140]

113. We have considered the impact of this proposal on Big LEO licensees and conclude they would not be unduly burdened by protecting RAS observations from out-of-band MSS emissions. It appears that less than one percent of the MSS consumer use would be affected by CORF's alternative proposals for protecting RAS from out-of-band MSS emissions.[141] Further, those affected would not be denied communications. They would simply be assigned to another uplink channel by the MSS network control center. We do not believe that the CORF proposals relegate the MSS to co-primary or even lower status. The RAS is seeking protection in bands only in the 1610.6–1613.8 MHz band, which is allocated to the RAS. Therefore we adopt CORF's proposals to protect RAS, during observations, from out-of-band emissions caused by Big LEO systems. If Big LEO operators cannot meet the power density levels necessary to protect RAS from harmful interference, we will require that Big LEO operations be terminated within the protection zones specified in § 25.213(a)(1)(iii).

c. *Out-of-band interference to RAS from secondary downlinks in the 1.6 GHz band.* 114. In the Notice, we proposed to codify the Committee's recommendations to eliminate potential harmful out-of-band interference to RAS from secondary MSS downlinks operating at 1613.8–1626.5 MHz.[142] The Committee recommended that such operations be restricted to frequencies separated by the upper edge of the RAS band by at least 2.2 MHz, that MSS downlink emissions be filtered aboard the spacecraft, that frequencies be selectively controlled and that an analysis and testing program be conducted in cooperation with the radio astronomy community. Based on its deliberations, the Committee proposed that we adopt rules governing use of the 1613.8–1626.5 MHz band that limit out-of-band emissions so that they do not exceed −238 dB(W/m²/Hz) during observations at non-VLBA sites and −198 dB(W/m²/Hz) during observations at VLBA sites.

115. Motorola argues that the limits proposed in the Notice are too rigid and would unduly constrain MSS operations.[143] In support, Motorola contends that those limits were devised originally using assumptions that are not applicable to Big LEO operations. For example, Motorola notes that the calculations assumed an immobile, continuous interference source, whereas secondary MSS downlink LEO operations would present an intermittent source. Further, Motorola notes that although the Committee reached a consensus on a recommendation regarding limits, it did not agree on a proposed rule to govern Big LEO MSS operations. Motorola asserts that instead of adopting specific protection limits applicable to MSS secondary downlinks, the Commission should only restate the general obligation that secondary services not cause harmful interference to primary services.

116. LQP and TRW disagree with Motorola. LQP states that our proposal is reasonable and should be adopted.[144] TRW asserts that Motorola's proposal does not adequately consider the needs of the RAS. It states, however, that if secondary downlinks are limited to the 1621.35–1626.5 MHz band, thereby creating a 7.5 MHz guardband between RAS and secondary MSS, Motorola's proposals would be acceptable.[145]

117. We recognize the need to protect RAS observations from secondary MSS downlink operations. At this juncture, however, we need not consider specific limits on Big LEO MSS secondary downlinks. Secondary services by definition shall not cause harmful interference nor claim protection from primary services.[146] This provision applies to protection of primary services from both in-band and out-of-band emissions and would apply to secondary MSS downlinks regardless of specified pfd levels. Thus, we see no reason to codify specific pfd limits as proposed in the Notice. We will instead modify proposed § 25.213(a)(2) to note that secondary MSS downlinks shall not cause harmful interference to primary RAS operations in the 1610.6–1613.8 MHz band. Further, operators of secondary downlinks will be required to take whatever steps necessary to resolve interference complaints by radio

[134] Proposed § 25.213(a)(1)(vii).

[135] *Notice*, note 2, *supra*, at para. 51.

[136] *See* CORF Comments at 3–4.

[137] Radio astronomy observatories use two types of antennas. Observatories with a very long baseline array (VLBA) use interconnected radio telescopes that are dispersed in widely separated locations. Due to the geographic separation of the telescopes, the chance of correlated interference from any single mobile earth terminal is small. Consequently, VLBA sites are not as susceptible to interference as are observatories using a single radio telescope. Eleven of the 16 radio astronomy sites in the U.S. are VLBA sites and they require relatively smaller protection zones than non-VLBA sites.

[138] Constellation Comments at 47.

[139] TRW Reply at 71.

[140] LQP Reply Comments at 57, Reply Tech Appendix at 2.1.

[141] CORF Reply Comments at 8.

[142] *Notice, supra* note 2, at para. 51; *see also* proposed § 25.213(a)(2).

[143] Motorola Comments at 54.

[144] LQP Reply at 59–60.

[145] TRW Reply Comments at 74.

[146] *See* note 21, *supra*.

astronomers. We expect that an applicant proposing to operate MSS downlinks in the 1613.8–1626.5 MHz band will be able to demonstrate in its application that it has sufficient satellite out-of-band emission attenuation to protect adjacent band U.S. RAS operations based upon the frequency separation inherent in the frequency assignment scheme adopted here.

118. Finally, Cornell University, Arecibo Observatory, notes its concern that MSS downlink transmissions at 1.6 GHz could have a "disastrous effect" on passive space research in the 1610–1667 MHz band.[147] LQP, in support of Cornell, notes that the Commission must limit MSS downlink transmissions to the 5.15 MHz proposed in the Commission's Notice, that is, to 1621.35–1626.5 MHz.[148] Motorola responds that "the 1613.8–1660 MHz band is not allocated to the RAS on a primary or secondary basis" and thus is not entitled to protection from secondary MSS downlinks operating outside that band.[149]

119. There is no RAS allocation in the 1613.8–1660 MHz band and the service is therefore not entitled to protection in these bands. Consequently, we will not limit MSS transmissions in order to protect RAS as suggested by Cornell University and LQP. In any case, we do not believe that RAS observations above 1634 MHz would be affected by secondary MSS downlinks in the 1621.35–1626.50 MHz band given the frequency separation.

d. *Spurious emissions into the 4990–5000 MHz from primary downlinks in the 2483.5–2500 MHz band.* 120. The Commission recognized that second harmonic spurious emissions from primary MSS downlink transmissions in the 2483.5–2500 MHz band could cause unacceptable interference to RAS operations in the 4990–5000 MHz band. It concluded and we proposed in § 25.213(a)(3) that MSS downlink out-of-band spectral power flux density (spfd) levels should be limited to −241 dB)W/m²/Hz) in the 4990–5000 MHz band.

121. We will adopt the rules as proposed. Although Constellation argues that it opposes any such codification of the radio astronomy community's definition of "unacceptable" interference,[150] we note that Constellation participated in the Committee and its deliberations and agreed to the Committee's Report that included this recommendation. More importantly, as stated in the *Notice*, we believe that these limits can be readily met through proper amplifier device selection and operating conditions in combination with post-amplifier filtering.

2. Aeronautical Radionavigation Satellite Service and Radionavigation-Satellite Service

122. The U.S. Global Positioning System (GPS) can operate under the radionavigation-satellite (space-to-Earth) service (RNSS) allocation in the 1565.2–1585.6 MHz band. GPS is a space-based positioning, velocity, and time system whose space segment, when fully operational, will be composed of 21 operational satellites in six orbital planes. GLONASS, the Russian Global Navigation Satellite System, can operate under the same service allocation in the 1597–1610 MHz bands.[151] Additionally, GLONASS can operate under the aeronautical radionavigation service (ARNS) allocation in the 1610–1616 MHz band pursuant to RR 732 of the international Radio Regulations.[152] The GLONASS system will include 24 operational satellites in three orbital planes. The user segment of both the GPS and GLONASS systems will consist of antennas and receiver-processors that can receive both GPS and GLONASS signals to provide positioning, velocity, and precise timing to the user. The Committee addressed ARNS/RNSS–MSS sharing and developed specific recommendations in that regard. We based the sharing proposals in the *Notice* on the Committee's recommendations and on requirements embodied in the International Radio Regulations.

a. *In-band interference to ARNS and MSS uplinks in the 1610–1626.5 MHz band.* 123. Pursuant to international Radio Regulations, MSS stations may not cause harmful interference to or claim protection from stations operating under RR 732. Further, international Radio Regulation RR 731F provides that MSS earth stations operating with MSS space stations cannot radiate an equivalent isotropically radiated power (e.i.r.p.) density greater than −15 dB(W/4KHz) in that portion of the band used by systems operating in accordance with RR 732, and −3 db (W/4KHz) in bands not so used.

124. The Committee concluded that GLONASS receivers operating on-board high altitude aircraft could be protected against interference from MSS operations operating in accordance with RR 731E.[153] It also concluded that protection would not be possible if GLONASS is used for aircraft approach and terminal communications, as is contemplated by the FAA.[154] The Committee recommended and we proposed in § 25.213(c)(1) to codify the uplink e.i.r.p. limits contained in RR 731E. The Committee had stated that this limit is needed to allow the proposed Big LEO systems to be implemented, although it acknowledged that it will not protect GLONASS if GLONASS is used to provide aircraft approach and terminal communications as a component of a "sole means" GNASS. The Committee also examined several methods to improve the ARNS/RNSS–MSS sharing environment. One was to reconfigure GLONASS so that it would operate only on frequencies below 1610 MHz.[155] Another method for improving sharing possibilities, it noted, would be to modify GLONASS receiver standards to reduce

[147] Cornell Comments at 3–5. The 1610–1667 MHz band is being used passively, without any allocation, by radio astronomers to observe red-shifted Hydroxyl (OH) emissions.

[148] LQP Reply Comments at 59.

[149] Motorola Reply Comments at 49.

[150] Constellation Comments at 48.

[151] *See Notice*, note 2, *supra*, at para. 53.

[152] RR 732 reserves the 1610–1626.5 MHz band on a worldwide basis for the use and development of air navigation and directly associated terrestrial or satellite based facilities. It also provides that any satellite use of the band is subject to agreement under the procedures of Article 14 of the International Radio Regulations. Pursuant to the international Radio Regulations, MSS stations may not cause harmful interference to or claim protection from stations operating in accordance with RR 731E.

[153] The Committee analyzed the potential levels of interference from a typical CDMA mobile unit to a GPS/GLONASS receiver. It concluded that MSS units would not interfere with enroute GLONASS navigation at altitudes in excess of 10,000 meters (Committee Report, note 23, *supra*, at 3.3.4.3). However, aviation parties participating in the Committee stated that the analysis was inadequate to demonstrate interference compatibility at a 95 percent confidence level.

[154] *See* para. 49, *supra*. For a further discussion of the disparity between ARNS protection requirements and MSS user terminal e.i.r.p. requirements, *see* Committee Report, note 23, *supra* at 18–21.

[155] The Committee offered two possible methods for limiting GLONASS operations to frequencies below 1610 MHz. One would be to reconfigure the GLONASS frequency plan. Currently, the plan is for a total of 24 GLONASS satellites to operate using 24 discrete downlink carrier frequencies. However, GLONASS statellites currently under construction have the ability to operate on any of the 24 frequencies distributed between 1602 and 1615.5 MHz. This frequency agility could allow antipodal satellites (those above opposite areas of the earth) to operate using the same frequencies. Thus, the entire system could operate using 12 frequencies below 1610 MHz. The other method would be to shift all 24 GLONASS frequencies to spectrum below 1610 MHz. The Committee noted however, that this more radical approach might require redesign of the GLONASS system. In any event, both the aviation community and the Big LEO community have indicated that they fully expect GLONASS to shift to frequencies below 1610 MHz at some point. The recent bilateral coordination meeting with the Russian Federation have confirmed that the GLONASS system will shift its frequencies to below 1606 by 2005 or sooner.

vulnerability to interference from in-band MSS. Alternatively, it suggested that the U.S. GPS be enhanced to lessen or eliminate reliance on GLONASS altogether. Further, the Committee recommended, and we proposed in Section 25.213(c)(2), that to protect operations of GLONASS receivers on-board aircraft, MSS terminals should be prohibited from being used on civil aircraft.

125. Aeronautical Radio, Inc., and the Air Transport Association of America (ARINC/ATA), Rockwell International Corporation (Rockwell), and the FAA argue that both GLONASS and GPS operations, as potential components of the GNSS, must be protected during all phases of flight over the United States. To that end, they proffer additional limitations on Big LEO operations. ARINC/ATA argues that the Commission should clarify that the RR 731E limitation of −15 dB (W/4kHz) for MSS mobile terminals should apply only after GLONASS moves to frequencies below 1610 MHz. Until then, they contend, the limit should be −78.5 dB (W/MHZ).[156] Similarly, Rockwell states that the RR 731E limit is insufficient for protecting GLONASS operations at 1610–1616 MHz. Rockwell claims that the RR 731E power density level is about 140 dB above the maximum interference level that can be tolerated by a typical GLONASS receiving system. Rockwell asserts that shared use of this band segment is impractical absent significant constraints on either MSS or GLONASS. Therefore, it maintains that MSS operation should not be permitted in the 1610–1616 MHz band segment until GLONASS operations are shifted to frequencies below 1610 MHz.[157] The FAA states that the Commission indicated that use of the 1610–1616 MHz band by MSS is premised upon moving GLONASS below 1610 MHz. It maintains that the e.i.r.p. density specified in RR 731E is too high to protect in-band GLONASS for anything but high altitude enroute communications.[158]

126. Several of the MSS applicants also disagree that more restrictive limits should be placed on MSS uplinks pending a GLONASS frequency shift. Constellation states that more realistic interference criteria and models must be developed before any requirements other than the RR 731E uplink e.i.r.p. density limit can be adopted.[159] Ellipsat contends that no additional requirements should be adopted because the aviation community has not provided a legitimate basis for overly stringent requirements on MSS uplinks. Further, Ellipsat maintains that even if GLONASS becomes a component of the GNSS, the aviation community has not provided a showing that GNSS performance would be impaired if degradation were to occur to the small number of GLONASS satellites that would operate above 1610 MHz.[160] Motorola claims that the proposed limits advocated by the aviation community are based on flawed assumptions and unsound analysis. Additionally, Motorola asserts that the protection the aviation parties claim as necessary is based on the erroneous assumption that corrupting a single measurement from a GLONASS satellite will cause unacceptable degradation in the ability to navigate.[161]

127. Several MSS applicants also state that, to afford new MSS systems flexibility in how they protect ARNS/RNSS, the Commission should modify proposed rule § 25.213(c)(1), which, in addition to the uplink limits contained in RR 731F, requires all MSS operations in the 1.6 GHz band to be coordinated with systems operating pursuant to RR 732. Motorola argues that rules embodied in the International Radio Regulations are adequate for ensuring coordination with and protection of other services.[162] Constellation contends that footnote RR 731E establishes the only enforceable interference criteria (*i.e.*, a maximum e.i.r.p. density of −15 dB (W/4kHz) from MSS transmitters) that can be incorporated into the Commission's rules at this time. Motorola, in contrast, suggests that the e.i.r.p. value set forth in § 25.213(c)(1) be interpreted as a coordination trigger rather than an absolute limit.[163] LQP states that the proposed rule requires MSS systems to protect GLONASS beyond the limits specified in RR 731E.[164]

128. We do not believe it is necessary to protect GLONASS operations beyond the provisions of RR 731E and the obligation to coordinate MSS systems under current International Telecommunications Union (ITU) procedures. RR 731E states clearly that MSS stations shall not cause interference to, nor claim protection from ARNS stations operating in accordance with RR 732. In addition, under ITU Resolution 46, Big LEO licensees would be subject to whatever limits or conditions agreed upon during the coordination process. GLONASS would likely be part of the coordination negotiations. Accordingly, we reject the aviation community's requests that additional limits be placed on MSS operations pending a GLONASS move, particularly absent definitive technical characteristics and requirements of a future GNSS system, and a definitive statement as to GLONASS's role in the GNSS.[165] Further, imposing additional constraints on Big LEO use of the 1610–1616 MHz band could jeopardize the applicants' ability to implement their systems. This could deprive the United States and those countries who choose to participate in offering services the potential benefits that Big LEOs could bring. Conversely, we do not believe the limits in RR 731E should be relaxed, as Motorola suggests. It is clear −15 dB(W/4kHz) is a limit and not a threshold for coordination. Therefore, we adopt the e.i.r.p. limits embodied in RR 731E in Section 25.213(c)(1) with the requirement that coordination of MSS mobile earth terminals must be undertaken according to the provisions of Resolution 46 (WARC–92).

129. We also adopt our proposed rule that prohibits operation of Big LEO terminals on-board civil aircraft unless the terminal has a direct connection to the aircraft's Cabin Communication System. However, we agree with Constellation and others that this is a transceiver operating provision and is not necessarily a sharing requirement. Therefore, since this provision is contained in § 25.136(a) of our rules, it need not be repeated in § 25.213. Consequently, we do not adopt proposed rule § 25.213(c)(2) and refer licensees to § 25.136(a).

b. *Out-of-band interference to ARNS/RNSS in the 1559–1610 MHz band.* 130. *Protection of GPS from out-of-band emissions from primary uplinks in the*

[156] ARINC/ATA Comments at 2–3.

[157] Rockwell Comments at 2–3.

[158] FAA Comments at 2.

[159] Constellation Reply Comments at 47.

[160] Ellipsat Reply at 11.

[161] Motorola Reply Comments at 51. Motorola notes that a study conducted for LQP by Sat-Tech Systems demonstrates that loss of a single satellite will never cause a loss of GNSS (LQP Comments at Technical Appendix, para. 2.2.1 at 12). In addition, the Committee performed an analysis of the availability of GNSS satellites if the GLONASS constellation operated only on frequencies below 1610 MHz. It concluded that a minimum of five satellites would always be available for GNSS. In addition, it noted that this minimum would occur for only 14 minutes in every 51-day period. It noted further that since only four GNSS satellites are required for navigation and an additional one satellite for system integrity, it appears that GLONASS satellites operating above 1610 MHz might not be required for either navigation or terminal approach communications. Committee Report, note 23, *supra* at 3.3.4.4.

[162] Motorola Reply Comments at 47.

[163] Motorola Comments at 55.

[164] LQP Comments at 66–67.

[165] LQP notes that the FAA has suggested that it is still studying how GLONASS "best fits" a GNSS. LQP Reply at 62.

1610–1626.5 MHz band. The Committee concluded that out-of-band emissions by MSS uplinks in the 1610–1626.5 MHz band could potentially interfere with GPS operations near 1575 MHz. The Committee found, however, that sharing is possible if appropriate limits are put on out-of-band emissions from MSS user transceivers.[166] The Committee recommended, and we proposed, that MSS user transceivers limit out-of-band emissions (for broadband noise emissions) so as not to exceed an e.i.r.p. density of −70 dBW/1MHz averaged over any 20 millisecond (ms) period in any portion of the 1574.397–1576.443 MHz band. For any discrete spurious emissions in the same band (*i.e.*, bandwidth less than 600 Hz), the user transceiver e.i.r.p. density is not to exceed −80 dbW.[167]

131. ARINC/ATA agrees that the proposed limits will protect GPS.[168] The FAA, however, recommended that the protection bandwidth for GPS "be established at least 20 MHz wide (*i.e.*, 1575.42+/−10 MHz)."[169] No technical analysis was provided to support this recommendation.

132. TRW, Ellipsat, and LQP contend that the proposed out-of-band emission limits should be relaxed.[170] They contend that relaxing the limits will allow for reasonably priced user terminals and will adequately protect GPS from out-of-band emissions from these terminals. Constellation, in contrast, supports the proposed limits. It states that the protection level of GPS receivers is reasonable given the frequency separation between the lower end of the MSS band at 1610 MHz and GPS signals at 1575.42 MHz.[171]

133. We believe that the proposed out-of-band emission limits for MSS user transceiver operations in the 1610–1626.5 MHz band are appropriate to protect GPS operations near 1575 MHz. Both the aviation and MSS parties participated in the Committee's deliberations that resulted in a consensus on an out-of-band emission limit for protecting GPS. No party has demonstrated that a modification of those limits is now warranted. The MSS parties do not demonstrate that the limits are overly restrictive or that significant additional costs would be incurred by building transceivers to meet the limits. Similarly, the aviation parties have not shown that additional protection bandwidth for GPS is necessary. We therefore adopt proposed § 25.213(b) with minor editorial changes.

134. *Protection of GLONASS from out-of-band emissions from primary uplinks in the 1610–1626.5 MHz band.* The Committee also addressed potential MSS out-of-band interference to GLONASS operations below 1610 MHz, but did not reach a consensus. It did, however, suggest a methodology that could be used to determine appropriate limits. It also noted that there was general agreement that the MSS user transceiver out-of-band emission limits recommended for protecting GPS would be sufficient to protect GLONASS operations below 1610 MHz.[172] We requested comment on the proposed methodology and on the appropriate parameters to be used in developing protection criteria.

135. ARINC/ATA and Rockwell maintain that the MSS out-of-band emission limits appropriate for protecting GPS operations near 1575 MHz should similarly apply to GLONASS operations below 1610 HMz.[173] The FAA suggests an interference threshold of −145 dBW/1MHz of GLONASS receivers operating below 1610 MHz and calculates a −71 dBW/1MHz MSS user terminal out-of-band emission limit which, it argues, is necessary to protect GLONASS operations at that particular interference threshold.[174].

136. The MSS applicants question whether the assumptions made by the aviation parties in their analyses are appropriate and disagree that a direct correlation can be made between the out-of-band emission limits necessary for protecting GPS and the limits necessary for protecting GLONASS below 1610 MHz. Constellation, for example, noted that the provisions to protect GPS from MSS out-of-band emissions were agreed to in the Committee, but that agreement was "without prejudice to the application of the interference protection model to any other case, *i.e.*, GLONASS, where it would be impractical to provide this same level of protection and for which other solutions are required to avoid harmful interference."[175] LQP notes that while the FAA, ARINC and ATA seek protection of individual GLONASS signals, they have not provided an analysis of why such protection is required to ensure the integrity of the GLONASS system.[176] Motorola contends that the analyses conducted by the aviation community are "skewed" because they have assumed that the MSS transmitter and the aircraft receiver are static when, in fact, both devices are usually mobile.[177] Motorola also lists a number of factors which it argues would provide a more accurate determination of necessary out-of-band emission limits.[178] TRW requests that we incorporate in the rules the ongoing measurement programs and the system vulnerability analyses now being used to determine actual protection requirements of GNSS.[179]

137. We will not adopt out-of-band emission limits to protect GLONASS operations below 1610 MHz at this time. The Committee did not agree on limits and the record indicates that a suitable methodology for determining such limits has still not been agreed upon. We note, however, that RTCA Working Group SC159 ad hoc has been established to assess interference to GNSS and possible interference mitigation techniques. The aviation community and the Big LEO applicants participate in this group. We expect that the report from SC159 ad hoc will include an assessment of the out-of-band emission limits on MSS operations necessary to protect GLONASS operations below 1610 MHz. We also believe that this information will provide a mutually acceptable out-of-band emission level.

c. Out-of-band interference to ARNS/RNSS from secondary MSS downlinks in the 1613.8–1626.5 MHz band. 138. The Committee also examined the potential for harmful interference to GPS and GLONASS from secondary MSS downlinks in the 1613.8–1626.5 MHz band. It concluded that interference to GPS operations near 1575 MHz from these downlinks would be negligible due to the low power

[166] *See* Committee Report, note 23, *supra*, at para. 5.2.2.7.

[167] *See* proposed § 25.213(b).

[168] *See* ARINC/ATA Comments at 3.

[169] *See* FAA Comments at 3.

[170] LQP suggested that the limit be −50 dBW/1 MHz averaged over any 20 ms period in any portion of the 1575.42+/−1.023 MHz band for broadband noise emissions. LQP Comments at 65. *See also* TRW Reply at 77 (n. 118), Ellipsat Reply at 11 (n.7).

[171] Constellation Comments at 49.

[172] *See* Committee Report, note 23, *supra*, at para. 5.2.2.7.

[173] *See* ARINC and ATA Comments at 3 and Reply at 7; Rockwell Comments at 4.

[174] FAA Comments at 3–4.

[175] *See* Constellation Comments at 49.

[176] *See* LQP Reply at 60–61. On LQP's behalf Sat-Tech Systems conducted an independent study of GNSS satellite availability. Sat-Tech Systems concluded that since multiple measurements from a number of GPS and GLONASS satellites would always be available, the loss of a single GNSS signal would not impair the ability to navigate using GNSS. LQP Comments, Technical Appendix at para. 2.2.1.

[177] Motorola Reply at 51.

[178] These include the effects of duty cycle, modulation technique, spectral overlap, channel assignment, airframe shielding, time duration of event, and signal processing. Motorola describes in detail the individual impact of each of these factors on the analyses in its reply technical appendix at 1–10.

[179] *See* TRW Reply at 77 (n 118).

density level of MSS satellite signals at the Earth's surface and the large frequency separation between the MSS and the GPS frequency bands.[180] To protect GLONASS from interference, however, the Committee recommended that space stations that use the 1613.8–1626.5 MHz band for downlinks not exceed a pfd of −141.5 dbW/m²/4kHz.[181] We proposed this limit in the Notice in rule § 25.213(c)(3).

139. Motorola requests that we limit proposed § 25.213(c)(3) to apply only to those frequencies that are used by systems operating in accordance with International Radio Regulation RR 732. Motorola contends that this would "follow any changes in the frequency plan of systems, like GLONASS, operating in accordance with RR 732, and would also avoid restricting the operations of MSS systems in frequencies where there are no aeronautical radionavigation systems and hence no need for a more restrictive power flux density limit."[182] Motorola also asks us to clarify that the pfd limit refers to the pfd level at the Earth's surface.

140. We believe that the pfd limits proposed in § 25.213(c)(3) can be readily achieved by MSS operators using the 1613.8–1626.5 MHz band for secondary downlink transmissions. We also believe that our intra-service sharing plan provides sufficient separation between the MSS downlink band and GLONASS operations below 1610 MHz so as not to create interference. Nevertheless, we have decided not to adopt the proposed rule containing out-of-band emission limits for secondary MSS downlinks. Adopting such a rule could be construed to imply that the secondary service has some protection rights relative to primary services in the band, which, by definition, it does not.[183]

141. We remind MSS operators that plan to use the 1613.8–1626.5 MHz secondary allocation for MSS space-to-Earth operations that downlink MSS operations shall not cause harmful interference to GLONASS operations in the 1598–1610 MHz band.[184] Further, MSS operators may not claim interference protection from out-of-band GLONASS operations. We also remind MSS operators of the obligation to coordinate secondary downlink operations in the 1613.8–1626.5 MHz band pursuant to RR 731F.[185]

3. Industrial, Scientific, and Medical Emissions at 2400–2500 MHz

142. The 2400–2500 MHz band may be used on a co-primary basis for Industrial, Scientific and Medical (ISM) equipment applications. ISM applications include microwave ovens, door openers, high frequency lighting systems, industrial equipment, and other low power devices. The Committee was unable to reach a consensus as to whether ISM use represents a significant interference problem to MSS downlinks at 2483.5–2500 MHz.[186] In the Notice, we stated that the record in this area was insufficient to propose specific MSS/ISM sharing rules and requested additional comment on this subject.[187]

143. In their comments, LQP and TRW indicate they conducted independent analyses of the potential for ISM operations to cause harmful interference to 2.4 GHz MSS downlinks. LQP concluded that MSS user transceivers operated in an urban environment with full signal quality in 98% of the instances it recorded. Further, it concluded that MSS signals would be usable 99.5% of the time. LQP also noted that because urban areas are usually served by terrestrial cellular networks, a dual mode transceiver could be switched to terrestrial cellular frequencies when very high ISM interference is present.[188] TRW states that its study generally corroborates LQP's conclusion that 2.4 GHz MSS operations should not be adversely affected by ISM transmissions.[189]

144. Consequently, we do not believe any further inquiry into the MSS/ISM sharing situation is warranted. Should sharing be more difficult than anticipated, affected parties may request that we revisit this matter.

4. Sharing with Fixed Services in the 2483.5–2500 MHz Band

145. Over 700 fixed terrestrial stations, including temporary fixed (transportable) stations, are licensed and operating in the United States in the 2483.5–2500 MHz band. These stations are primarily used as links in microwave relay systems serving petroleum companies and as broadcast auxiliary links. Since 1985, however, the Commission has prohibited any further terrestrial licensing in this band.[190]

146. The Committee recognized that MSS spacecraft operating at power flux density (pfd) levels in excess of the levels prescribed by international radio regulation RR 2566 would be required to be coordinated with these "grandfathered" fixed terrestrial stations.[191] It stated, however, that these cases should be infrequent and that, in any event, any interference problems should be resolvable through coordination. The Committee also noted that terrestrial operations could interfere with MSS operations, although no analyses were provided to quantify the sharing constraints needed to prevent such interference. The Committee stated that because there is no inherent reason why fixed services need to continue operating in this frequency band, the Commission should consider moving these fixed stations to a higher frequency band.

147. In the Notice, we accepted the Committee's finding that interference problems between terrestrial fixed-services at 2483.5–2500 MHz and MSS downlinks operating in excess of the prescribed pfd levels may be settled through the coordination process.[192] We requested comment on this assessment. We also specifically requested comment from terrestrial operators, who did not participate in the Negotiated Rulemaking.

148. In the RDSS Allocation Order, we recognized that fixed and temporary-fixed operations are unlikely to pose a serious interference threat to RDSS.[193] We therefore grandfathered all existing station licenses as of July 25, 1985, permitting them to continue operations and subject only to license renewal. However, we acknowledged that coordination would be somewhat more difficult when temporary-fixed stations are involved since RDSS licensees would not have exact information regarding the location of these stations. Therefore, we required temporary-fixed licensees in this band to notify RDSS licensees directly whenever the station

[180] Committee Report, note 23, *supra*, at para. 3.3.8.

[181] Committee Report, note 23, *supra*, at para. 5.2.2.6.

[182] See Motorola Comments at 56.

[183] See note 21, *supra*.

[184] See note 21, *supra*.

[185] See § 2.106 of the Commission's Rules.

[186] Committee Report, note 23, *supra*, at 3.4.9.

[187] Notice, note 2, *supra* at para. 67

[188] LQP Comments, Technical Appendix at 32.

[189] TRW Reply Comments at 86. In earlier comments, TRW suggested that the Commission reassess the permissible levels of unwanted ISM emissions in order to maximize sharing possibilities.

[190] Report and Order, Gen. Docket 84–689, FCC 85–388 (released Sept. 13, 1985) (RDSS Allocation Order).

[191] RR 2566 specifies pfd values at the Earth's surface that may be produced by space station emissions. The values vary from −152 to −142 dB (W/m²/4 kHz) depending upon the angle of arrival. International radio regulation RR 753F incorporates these limits. According to RR 753F, if the limits of RR 2566 are exceeded by the MSS, coordination with terrestrial services is required.

[192] Notice, note 2, *supra*, at para. 62.

[193] See RDSS Allocation Order, note 190, *supra*, at paras. 18–20.

is moved to a new location.[194] A similar interference environment is present with MSS operations. Consequently, we proposed to modify Section 94.61(b)(4) to extend the notification requirement for grandfathered temporary-fixed licensees to MSS licensees as well.[195]

149. The Big LEO parties argue that the Commission should adopt pfd limits for MSS transmissions that are less stringent than those of RR 2566 and that these limits should be implemented as "triggers" for coordination, not as "absolute limits."[196] This would work in the following manner: the relaxed pfd limit would be established as a "trigger level." If the trigger level is not exceeded, no further action would be required. If the trigger level is exceeded, the interference level to terrestrial systems would then be examined, taking into account the individual system characteristics of the MSS system. Only if the protection levels of the second step are exceeded would coordination be required.[197] According to the Big LEO parties, relaxing the pfd levels and applying the coordination trigger method would enable the MSS systems to enhance capacity and sharing with other MSS operators and avoid time-consuming and costly coordination.[198]

150. We adopt the pfd threshold of RR 2566 for our domestic Big LEO systems. The ITU Radiocommunication Study Group, Task Group 2/2 (TG 2/2), is studying the issue of relaxing the pfd limits of RR 2566, with the view to present a recommendation at an upcoming World Radiocommunciation Conference (WRC). The Commission participates actively in the work of TG 2/2. We do not believe it would be appropriate to adopt an increase in the allowable pfd limits for MSS downlinks in the 2483.5–2500 MHz band in the United States before limits are agreed upon internationally. Indeed, even if we adopted a relaxation of the RR 2566 pfd limits in the United States, it is questionable whether MSS systems that are not designed for power controlled downlink transmissions would be able to take advantage of this relaxed limit worldwide.

151. We also adopt the notification requirement for grandfathered temporary-fixed licensees to MSS licensees as proposed in the Notice and will not require these stations to relocate. No comments were filed with respect to a possible relocation of grandfathered terrestrial stations. We therefore have no record in this proceeding on which to base a finding that a move would serve the public interest.

5. Fixed Services above 2500 MHz (ITFS/MMDS)

152. The instructional television fixed service (ITFS) and the multi-channel multipoint distribution service (MMDS) operate in the adjacent 2500–2690 MHz frequency band. The Committee found a potential for out-of-band emission interference into MSS downlinks at 2483.5–2500 MHz from operations in the lowest frequency portion of the ITFS/MMDS allocation. It indicated that because both ITFS and MMDS transmissions are similar to those of television broadcast signals, they will cause harmful interference into MSS mobile user transceivers operating up to several kilometers away from an ITFS or a MMDS transmitter. The Committee concluded that stricter limits on ITFS and MMDS out-of-band emissions should be imposed, and recommended that the Commission initiate such a rulemaking.[199] It acknowledged, however, that making these improvements would cost up to $30,000 per ITFS or MMDS station, and that this cost might increase if these stations are converted from analog to digital technology.

153. We stated in the Notice that the record was insufficient to allow us to make a specific proposal in this area.[200] No ITFS representative participated on the Committee nor did the Committee explore the economic and technical tradeoffs that must be considered in developing a solution. Therefore, we requested comment on all aspects of the ITFS/MSS sharing issue, noting that the regulations we ultimately adopt would be based on these comments. We noted that these regulations might require ITFS operators to improve out-of-band suppression, might require MSS operators to accept additional interference, or might require a combination of both.

154. Ellipsat and TRW contend that new out-of-band emission constraints on all ITFS/MMDS stations should be applied immediately to allow for a transition period for these transmitters to conform to new requirements and that, according to Section 74.936 of the Commission's Rules, the "onus is on the ITFS operator to provide the required interference protection to adjacent band services."[201] Further, TRW asserts the licensing of Big LEO systems or the initiation of service should not be delayed to permit ITFS operators additional time to modify their transmitters.

155. The Wireless Cable Association International (WCAI), the National Telephone Cooperative Association (NTCA) and the Corporation for Public Broadcasting (CPB), urge that the Commission adopt rules that will provide adequate compensation to ITFS/MMDS operators for costs associated with improving their transmitters to comply with any stricter out-of-band emission requirements.[202] WCAI also notes that broadband repeaters used by some ITFS and wireless cable system operators to relay signals into areas that would otherwise be unreachable could pose a threat to MSS downlink operations at the upper portion of the 2483.5–2500 MHz band.[203]

156. LQP, in contrast, does not believe that interference is a significant problem. It conducted a study to assess the impact of ITFS/MMDS out-of-band interference to MSS downlinks in the 2483.5–2500 MHz band and concluded that no harmful interference to MSS operations will result from ITFS/MMDS, including operations of ITFS/MMDS booster stations, and that stricter standards on ITFS/MMDS out-of-band emissions are not necessary. LQP maintains that: (1) MSS downlink operations below 2488.75 MHz will not experience interference from ITFS stations, (2) in urban areas, where ITFS transmitters are prevalent, MSS dual

[194] See 47 CFR 94.61(b)(4).

[195] Notice, note 2, *supra*, at para. 62 (n. 104). *See also Allocation Order*, note 1, *supra* (modifying NG 147 to the Table of Frequency Allocations, 47 CFR § 2.106, to recognize that "grandfathered" terrestrial stations may continue to operate on a primary basis with the MSS.)

[196] LQP Comments at 75, Ellipsat Reply Comments at 24, TRW Reply Comments at 78.

[197] LQP Comments at 77, TRW Comments at 131.

[198] We note also that LQP has, in a separate proceeding, recommended that these limits be raised. LQP Comments at 74; see Petition for Clarification and Partial Reconsideration of Loral Qualcomm Satellite Service, Inc., ET Docket No. 92–28 at 7–10 (filed Mar. 30, 1994).

[199] Specifically, the Committee concluded that out-of-band emissions from the lowest frequency ITFS/MMDS channel using an analog video signal at 2500–2506 MHz should be limited to −90 dB relative to the carrier at a frequency offset from band edge between 1.25 and 2 MHz, assuming that the channel is operating at 30 dBW e.i.r.p. Adjustments could be made for higher frequency channels and for higher or lower operating e.i.r.p. Currently, ITFS out-of-band emissions extending more than 1 MHz below the lower band edge must be attenuated 60 dB below the peak visual carrier power. *See* 47 CFR § 74.936(b).

[200] Notice, note 2, *supra*, at para. 64.

[201] TRW Comments at 132, Ellipsat Reply Comments at 24. Section 74.936 of the Commission's rules, which pertains to ITFS facilities, states that "should interference occur as a result of emissions outside the assigned channel, additional attenuation may be required." 47 CFR 74.936.

[202] WCAI Comments at 3 and 6, NTCA Comments at 2–3, and CPB Comments at 6.

[203] WCAI Comments at 4.

mode transceivers can be used to switch customers to existing terrestrial cellular radio facilities, and (3) MSS user transceivers operating in the highest channel frequency in the 2483.5–2500 MHz band within an ITFS coverage area will be able to operate satisfactorily in all but a few extreme situations by rejecting the ITFS visual carrier and other out-of-band emissions.[204]

157. TRW urges that the LQP study "may have taken an overly optimistic view of the interference situation."[205] TRW also contends that MSS systems using wider CDMA channels (e.g., 5 MHz or wider) may not have the flexibility to move to a lower frequency channel and that until further required measurements are taken and MSS system designs are finalized, the impact of ITFS/MMDS out-of-band interference is not certain.[206]

158. Upon review of the technical information in the record, we see no significant threat of harmful out-of-band emission interference into MSS from ITFS/MMDS operations above 2500 MHz. Well designed CDMA receivers should mitigate the effect of out-of-band emissions from ITFS/MMDS. Additionally, a MSS user transceiver's dynamic channel switching capability should reduce any adverse affects from ITFS/MMDS. Further, our intra-service sharing plan allows enough 2.4 GHz band spectrum for MSS operators to avoid ITFS/MMDS out-of-band emissions in the upper portions of the allocation. Consequently, we will not initiate a proceeding to restrict further the out-of-band emissions on ITFS/MMDS at this time.

6. Other Terrestrial Services provided outside of the United States

159. In sixteen countries throughout the world, the 1550–1645.5 MHz band is allocated on a primary basis to the fixed service pursuant to international Radio Regulation RR 730.[207] Ground-based aeronautical radionavigation services (ARNS) are also operating throughout the world in the 1610–1626.5 MHz band pursuant to RR 732.

160. The Committee concluded that existing fixed stations operating in the 1610–1626.5 MHz band pursuant to RR 730 and ground-based ARNS stations operating pursuant to RR 732 will not cause harmful interference to MSS operations. It also concluded that MSS operations will not cause harmful interference to these terrestrial services. Consequently, we proposed only to reiterate in Section 25.213(d) of our rules the general obligation that MSS stations shall not cause interference into stations operating under RR 730. The requirement that MSS stations shall not cause interference to, or claim protection from, stations operating pursuant to RR 732, (international Radio Regulation RR 732 encompasses both ground-based and satellite-borne ARNS), was addressed by proposed rule section 25.213(c)(1), which was adopted earlier in this order.[208]

161. Constellation contends that we should not adopt proposed § 25.213(d) since there are no U.S. systems operating pursuant to RR 730.[209] We disagree. We have repeatedly emphasized in this proceeding that the operation of LEO MSS systems is inherently global. Though there are no systems operating in the United States pursuant to RR 730, it is important that we make clear the obligations of Big LEO operators to coordinate their systems worldwide. Our rules do not elsewhere address coordination of Big LEO systems with systems operating pursuant to RR 730.

162. We therefore adopt Section 25.213(d), as proposed, with the caveat that the coordination and notification procedures fall under Resolution 46 (WARC–92).[210] International Radio Regulations RR 731E and RR 731F require, respectively, that MSS uplink transmissions in the 1610–1626.5 MHz band and MSS downlink operations in the 1613.8–1626.5 MHz band be coordinated and notified pursuant to Resolution 46 (WARC–92). Also according to RR 731E, MSS mobile earth terminals may not cause interference to terrestrial stations operating in accordance with RR 730 and they may not claim interference protection from these terrestrial stations. We note that all transmitting MSS subscriber terminals will be subject to the regulatory requirements of those countries in which they are operating. User countries will be responsible for undertaking all necessary coordination with neighboring countries to protect fixed or terrestrial aeronautical radionavigation operations from MSS mobile earth terminals in those neighboring countries. Any secondary MSS downlink operations in the 1613.8–1626.5 MHz band also may not cause harmful interference into terrestrial services operating pursuant to RR 730 or 732. Nor may a MSS mobile earth terminal which receives secondary downlink transmissions claim protection against harmful interference from these terrestrial operation unless a particular country has agreed to provide this protection.

C. Feeder Links

163. In addition to the mobile links connecting customers with the MSS system, one or more "gateway" or central earth stations are needed to complete the transmission paths, process the information being transmitted, and interconnect the system with other communications networks or with other user transceivers. Without these "feeder links," an MSS system would be useless. Because feeder links operate with gateway stations at fixed locations, the feeder link operates in frequency bands allocated to the fixed-satellite service (FSS).

164. The six applicants requested a variety of feeder link frequency bands and bandwidths. In their applications, Constellation, Ellipsat, and LQP each requested 66 MHz of spectrum in each transmission direction in the 5/6 GHz C-band. Motorola and TRW and each requested approximately 100 MHz in each direction the 20/30 GHz Ka-band. AMSC requested an unspecified amount of spectrum in the 12/14 GHz Ku-band.[211] We note, however, that four of the applicants, in the Joint Proposal, indicate that their feeder link spectrum requirements have increased significantly since they filed their original applications. As recognized in the Notice, the FAA has opposed use of the 5 GHz portion of the C-band for space-to-Earth feeder links because of the interference potential between the feeder links and a navigation system it is considering developing in this band.[212] The 27.5–29.5 GHz portion of the Ka-band was the subject of a recently completed Negotiated Rulemaking involving various terrestrial and satellite interests seeking to use the band. The Negotiated Rulemaking Committee was unable to devise sharing criteria that would satisfy the feeder link requirements of more than one Big LEO applicant.

165. In the Joint Proposal, the parties nevertheless request the Commission to proceed with licensing. They state that licenses can be issued to those applicants requesting to operate in feeder link bands that are available for

[204] LQP Comments, Technical Appendix, at 27.

[205] TRW Reply Comments at 79.

[206] TRW Technical Appendix to Reply Comments at A–24.

[207] These countries are Austria, Bulgaria, Cameroon, Germany, Guinea, Hungary, Indonesia, Libya, Mali, Mongolia, Nigeria, Poland, Romania, Senegal, Czechoslovakia, and the former U.S.S.R.

[208] See para. 128, *supra*.

[209] Constellation Reply comments at 47 and Constellation Comments at 53.

[210] See Motorola Comments at 56.

[211] Committee Report, Annex 3, Report of Working Group 3, at 2.

[212] See Notice, note 2, *supra*, at para. 75

assignment at the time of licensing. They suggest that conditional licenses be awarded to applicants requesting to operate in feeder link bands that are not available. According to the parties, the license would contain a range of feeder link frequencies that the licensee will be able to use provided that those frequencies become available for Big LEO feeder links and are assigned to that licensee by the Commission.

166. We agree that we should award Big LEO licenses as quickly as possible. While we are optimistic that sufficient spectrum will be identified to support Big LEO feeder link operations, we are not certain when this will occur. It is very likely that we will not be in a position to assign specific feeder link spectrum to any qualified applicant by our target date for licensing in January 1995. Even if we were able to assign specific feeder link spectrum to some, however, we would not issue unconditional grants to some and conditional grants to others as the applicants suggest. Until we are certain that the feeder link requirements of all qualified applicants will be met, we will not foreclose our options by assigning spectrum unconditionally.[213] We will permit applicants to notify us whether they would prefer to have conditional feeder link frequencies included in their authorizations or whether they would prefer their initial license to be silent on this issue. We envision granting unconditional licenses, including specific feeder link frequencies, at the earlier of two events: (1) Domestic allocations sufficient to support all Big LEO systems are available, regardless of frequency band or (2) the completion of the upcoming World Radio Conference in the Fall of 1995 (WRC–95) assuming sufficient spectrum is made available to satisfy these feeder link requirements. If sufficient feeder link spectrum to support all licensed Big LEO systems is not identified by the completion of the WRC, we will need to develop a further processing mechanism to assign feeder link bands to Big LEO licensees. In the interim, we will continue our international efforts to identity feeder link spectrum at or below 15 GHz.

167 To this end, in preparation for the WRC, ITU-Radiocommunications Study Group Task Groups 8/3 and 4/5 are attempting to define spectrum requirements, to identify available frequencies and to evaluate sharing possibilities with existing and future users of the band. When these Groups complete their work in December of this year, both will prepare Reports to the Conference Preparatory Meeting (CPM)–95. These Reports will form the basis for the CPM's Report to WRC–95 on feeder links, which will be the technical basis for international decisions regarding feeder links and the International Table of Allocations.

168. Since the frequencies to be used for LEO feeder links may also be used by GSO satellites, Task Group 4/5 is studying the sharing potential between LEO and GSO satellites in all FSS allocations between 3 and 31 GHz. These studies have indicated that certain FSS frequency bands are used more extensively by GSO FSS systems and other radio services and that these bands are therefore less likely candidates for LEO MSS feeder links due to sharing difficulties. In bands at or below 15 GHz, the 5000–5250 GHz and 15.4–15.7 GHz frequencies appear to be promising candidates for reallocation for LEO feeder links.[214] Task Group 4/5 has also studied the interference created by antenna beam coupling between GSO earth stations and LEO satellite stations,[215] and is exploring ways to reduce interference through a variety of coordination procedures, including geographic exclusion zones, reverse band operation, and dedicated frequency allocations for LEO satellite feeder link use. When these studies are completed, we will have an indication as to which bands may be recommended and, hopefully, made available internationally for MSS feeder links at WRC–95.

169. Nevertheless, as we stated in the Notice, we will not allow the uncertain availability of bands below 15 GHz to delay the licensing and implementation of Big LEO systems. Consequently, if sufficient spectrum is made available at 20/30 GHz to accommodate all Big LEO licensees before bands below 15 GHz are identified, we will authorize all licensees in the 20/30 GHz band, recognizing that several applicants will be faced with substantial system design and service concept modifications. We will continue, however, to pursue bands at and below 15 GHz for Big LEO feeder links, and will allow licensees to modify their licenses to request operational authority in any new bands if, and when, they become available.

D. Intersatellite Links

170. Motorola's proposed system includes intersatellite transmission links in the 23.18–23.38 GHz band. This proposal falls within the intersatellite service allocation at 22.55–23.55 GHz. The Committee concluded that Motorola's use of this band would be compatible with other operations in the band, which include operations by NASA, the radio astronomy service, and fixed-terrestrial services. The Committee noted, however, that NASA has indicated it would prefer that any future MSS intersatellite links operate in the 24.45–24.75 GHz band, which recently was allocated internationally and domestically for intersatellite links. Nevertheless, the Committee, which included a representative of NASA, proposed that we adopt a rule indicating that the 22.55–23.00 GHz, 23.00–23.55 GHz, 24.45–24.65 GHz, and 24.65–24.75 GHz frequencies are available for use by the intersatellite service. In the Notice, we proposed to adopt the Committee's recommended rule regarding intersatellite service frequencies, coordination with government agencies, and sharing criteria. We adopt the rule as proposed with several minor changes and clarifications suggested by Motorola.

E. Service Rules

1. Regulatory Treatment

171. In the Notice, we asked parties to comment on our tentative conclusion that Big LEO MSS service may be offered as a commercial mobile radio service (CMRS). We further sought comment on whether we should exercise our discretion under Section 332(c)(5)[216] to determine that Big LEO space station licensees making satellite capacity available to CMRS providers

[213] We will, however, take action on requests for waiver of the construction permit requirement under Section 319(d) of the Communications Act, 47 U.S.C. 319(d). If an applicant's waiver request were approved, it would permit the applicant to commence construction of its system, including the feeder links, at the applicant's own risk.

[214] Task Group 4/5 forwarded a preliminary study to TG 8/3 that identified the 5000–5250 GHz and 15.4–15.7 GHz bands as strong candidates for Non-GSO Earth-to-space feeder links. The study indicated that TG 4/5 was of the preliminary view that sharing of non-GSO feeder links (both downlinks and uplinks) with Aeronautical Radionavigation Services (ARNS) in these bands appeared feasible, since the interference to microwave landing system (MLS) receivers would be within the assumed permissible levels. ICAO, at Task Group 8/3, objected to this study, but further analysis is underway and the bands are still being considered as possibilities within these international forums.

[215] Antenna beam coupling occurs when a LEO satellite passes below a GSO satellite and crosses into the transmission path of an earth station to the GSO satellite. At that point, the transmission beams from the LEO satellite and the earth station will intersect. If the LEO and GSO systems are operating in the same frequency band, this "coupling" will produce significant interference for very short durations of time when the earth station, LEO and GSO satellites form a straight line.

[216] Section 332(c)(5) reads as follows: "SPACE SEGMENT CAPACITY Nothing in this section shall prohibit the Commission from continuing to determine whether the provision of space segment capacity by satellite systems to providers of commercial mobile services shall be treated as common carriage." 47 U.S.C. 332(c)(5).

shall be required to operate as common carriers. In the alternative, we asked parties to comment on how we should regulate Big LEO space station operators if they are not offering CMRS. We noted that when making determinations regarding common carriage obligations in the past, the Commission has examined individual service proposals in light of the criteria delineated in *National Association of Regulatory Utility Commissioners* v. *FCC*, 525 F.2d 630, 642 (D.C.Cir.), *cert. denied*, 425 U.S. 999 (1976) (*NARUC I*).[217] Referencing the two-pronged test in *NARUC I*, in the Notice, we requested comment regarding (1) the likelihood that space station capacity in this service will be offered indifferently to the public, and (2) if there is no such likelihood, whether there should be a legal compulsion for space segment providers to serve the public indifferently.[218] We also asked for comment on the impact of requiring common carrier operation on the amount of foreign investment and the international coordination of these satellites, given the requirements of Section 310(b) of the Act.[219]

172. In a recent rulemaking, we determined the classification and regulatory treatment of providers of CMRS.[220] Regarding satellite services, we held that, to the extent that a space station licensee provides a service that meets the elements of the CMRS definition,[221] we will generally regulate the provision of that service on a common carrier basis.[222] We concluded, however, that so long as the service provider is not providing service directly to end users, the Commission retains the authority under section 332(c)(5) to continue to employ its existing procedures to determine whether the provision of space segment capacity by satellite licensees to CMRS providers will be offered on a common carrier or private carrier basis.[223] We also determined that the Commission has the discretion to extend this treatment to any entity that sells or leases space segment capacity, to the extent that the entity is not providing CMRS directly to end users.[224]

173. Motorola and LQP agree that the Commission must regulate Big LEO space station licensees as common carriers to the extent that they provide CMRS to end users.[225] If the licensees offer only space segment capacity to resellers, however, the parties contend that this provision of service does not fall within the definition of CMRS, and therefore need not be made available on a common carriage basis.[226] LQP argues that in this situation, the public is assured common carriage access to the service because, at some point a reseller will meet the definition of a CMRS provider and will be required to operate as a common carrier.[227]

174. Big LEO space station licensees providing service directly to end users must be regulated as common carriers if the service offering meets the definition of CMRS. We will determine whether a service offering meets the definition based on the service description contained in the operator's application. Operators with pending applications may amend their applications to the extent necessary to enable us to make the determination regarding the nature of the service.[228]

175. Pursuant to section 332(c)(5), however, if space segment capacity is offered by a Big LEO space station licensee to a reseller or other entity who then offers CMRS to end users, we have the discretion to determine whether to require the Big LEO licensee to offer such service on a common carriage basis, or to permit such offering to be made on a private carriage basis. In making this determination, we have looked to the analysis enunciated in *NARUC I*.

176. Regarding the first prong of the *NARUC I* test, the commenters agree unanimously that nothing in the nature of the applicants' service proposals supports a conclusion that their services will be offered indifferently to the public. Motorola points out that it and the other applicants propose to market their space segment capacity to a small number of resellers, and to tailor these offerings to the individual requirements of these few customers. Motorola contends that such offerings have never been viewed as "common carriage" under the *NARUC I* standard.[229] Constellation, LQP, TRW, and AirTouch concur, noting that Commission has historically viewed a service provider's lack of intent to serve end users as an indication of non-common carriage.[230]

177. We agree with the commenters that the record in this proceeding does not support a finding that the proposed space segment services are likely to be offered to the public indifferently, a basic characteristic of common carrier service.[231] First, in cases where licensees have not intended to serve the user public directly, the Commission has found services to be non-common carrier in nature. In Domestic Fixed-Satellite Transponder Sales, for example, the Commission noted the slim likelihood that non-common carrier domestic satellites would hold themselves out indifferently to serve the user public as key to its decision to permitted qualified persons to apply for domestic satellite licenses for non-common carrier purposes.[232] More recently, the Commission, in assessing its discretion under section 332(c)(5), held that non-voice, non-geostationary (NVNG) MSS space station licensees would be permitted to provide system access to CMRS providers on a non-common carrier basis.[233] Second, these limited offerings will be tailored to provide resellers with a wide variety of options, ranging from position determination and data messaging services, such as those proposed by the NVNG MSS proponents, to global telephony. Consequently, there is nothing in this record to support a finding that the services will be offered indifferently to the public.

178. Regarding the second prong of the *NARUC I* test, the commenters

[217] Notice, note 2, *supra*, at para. 80.

[218] *Id.* at paras. 80–81.

[219] *Id.* at para. 81.

[220] Implementation of Sections 3(n) and 332 of the Communications Act, 9 FCC Rcd 1411 (1994) (CMRS Second Report and Order), recon. pending.

[221] *Id.* at 1457–58. A commercial mobile radio service is defined as "any mobile service (as defined in section 3(n)) that is provided for profit and makes interconnected service available (A) to the public or (B) to such classes of eligible users as to be effectively available to a substantial portion of the public, as specified by regulation by the Commission." 47 U.S.C. 332(d)(1). A private mobile radio service is defined as "any mobile service (as defined in section 3(n)) that is not a commercial mobile service or the functional equivalent of a commercial mobile service, as specified by regulation by the Commission." 47 U.S.C. 332(d)(3).

[222] It should be noted, however, that we have chosen to forbear (pursuant to Section 332(c)(1)(A)) from the application of certain provisions of Title II of the Act with regard to CMRS providers. As such, for example, CMRS providers are not permitted to file tariffs for their services. See CMRS Second Report and Order, note 220, *supra*, at 1478–80.

[223] *Id.* at 1457–58.

[224] *Id.* at 1457.

[225] Motorola Comments at 67–68.

[226] See *e.g.*, TRW Comments at 153–54 & n.239; LQP Comments at 97–98.

[227] LQP Comments at 97, 100.

[228] See para. 2, *supra*.

[229] Motorola Comments at 64–65 (asserting that space capacity on the IRIDIUM system will never be offered directly to the public; rather, it will be provided on a wholesale basis to the operators of the IRIDIUM system gateways, who in turn may provide services to end users or sell capacity in bulk to service providers, or both).

[230] Constellation Comments at 60; LQP Comments at 97–98; TRW Comments at 158–160; AirTouch Comments at 9–10.

[231] See para. 171, *supra*. *See also* Motorola Comments at 64.

[232] Domestic Fixed-Satellite Transponder Sales, 90 FCC 2d 1238, 1256–57 (1982), *aff'd*, Wold Communications, Inc. v. FCC, 735 F.2d 1456 (D.C. Cir. 1984), *modified* Martin Marietta Communications Systems, Memorandum Opinion and Order, 60 Rad.Reg. (P&F) 2d 779 (1986).

[233] *NVNG MSS Order*, note 48, *supra*, at 8456.

unanimously agree that there should be no legal compulsion for space segment provides to serve the public indifferently. AirTouch and other commenters allege that there will be significant competition in the provision of these services to CMRS providers, both from Big LEO systems, as well as from GSO MSS and NVNG MSS systems.[234] These commenters also assert that sufficient capacity will be available to assure service availability to those that wish to receive it.[235] TRW further contends that the danger of unreasonable or anticompetitive practices that common carrier regulation is designed to prevent will not exist in the competitive environment in which Big LEO licensees will operate because five applicants seek authority to operate these services.[236]

179. We concur that there does not appear to be a need to impose common carrier requirements on Big LEO licensees at this time. The Commission has found the presence of capacity and the resulting competition to be an important factor in determining whether non-common carrier treatment should be permitted.[237] As the commenters state, competitive voice mobile services already exist or are imminent. Furthermore, satellite-delivered radiolocation and messaging services are currently provided by a Commission licensee,[238] and are proposed by a number of NVNG MSS applicants.[239] Moreover, under our rules adopted today, sufficient spectrum is available to support the grant of up to five of the pending Big LEO applications.[240] Thus, significant direct competition is approaching.[241] We accordingly believe that sufficient competitive capacity will be available to assure the public of ample access to these services. Therefore, we find that there is no reason to require the provision of space segment capacity to be offered to resellers on a common carrier basis.[242] Of course, if a space segment capacity provider chooses to provide service on a common carrier basis, that service provider would be subject to regulation as a CMRS provider.[243] The Commission has forborne from applying certain provisions of Title II to CMRS providers.[244]

180. In so finding, we recognize that the commenters argued the imposition of common carrier requirements may have an adverse effect on the development of this service. AirTouch and others argue that Section 310(b) restrictions on foreign involvement in the affairs of domestic common carrier licensees may significantly hinder investment by foreign entities, as well as their willingness to allow a U.S. licensee to operate within their own borders.[245] The commenters allege that this investment is critical to the development of a global satellite service.[246] Further, Motorola states that the submission of U.S. service providers to common carrier requirements will inhibit their ability to compete with foreign systems that are not similarly encumbered.[247] LQP concurs, noting that the space station licensees should be free to tailor their business plans to their respective customer bases.[248]

181. While we have already found that common 2 carrier requirements need not be imposed on space segment operators providing service to resellers, there are several other factors that militate against the imposition of common carrier requirements, particularly those limiting alien ownership under Section 310(b) of the Communications Act. Specifically, these systems are inherently global, and extremely expensive. Systems may be comprised of as many as 66 satellites, only a small number of which are visible over the United States at any one time. Because of their global nature, many systems are raising capital in international markets.[249] As such, it is reasonable to expect that investors will want to be involved with system operation, particularly if the system will be accessed from the investor's jurisdiction. We concur that this foreign participation is likely to improve the likelihood of receiving a grant of space station access by foreign administrations.

2. System License and License Term

182. As proposed in the Notice, and unanimously endorsed by the parties, we will follow the policy we established in licensing NVNG MSS systems, which are also composed of constellations of technically identical LEO satellites. Specifically, we will issue a single "blanket" authorization for the construction, launch, and operation of all the satellites in an entity's constellation. This authorization will cover all construction and launches necessary to put the complete constellation into place and to maintain it until the end of the license term, including any replacement satellites necessitated by launch or operational failures, or by the retirement of satellites prior to the end of the license period. All replacement satellites, however, must be technically identical to those in service and may not cause a net increase in the number of operating satellites.[250] This blanket authorization will include any in-orbit spares for which the applicant seeks authorization as part of its system. Any such spares can be activated as required. Within ten days of activation, the licensee must certify to the Commission that the activation did not cause it to exceed the total number of operation satellites for which its

[234] See, e.g., AirTouch Comments at 7–8; Ellipsat Comments at 46; TRW Comments at 156–157.

[235] AirTouch Comments at 8; TRW Comments at 157; Ellipsat Comments at 46.

[236] See TRW Comments at 156. See also Motorola Comments at 63.

[237] Domestic Fixed-Satellite Transponder Sales, note 232, *supra*, at 1250–53.

[238] See Qualcomm, Inc., Application for Blanket Authority to Construct and Operate a Network of 12/14 GHz Transmit/Receive Mobile and Transportable Earth Stations and a Hub Earth Station, 4 FCC Rcd 1543 (1989).

[239] Final rules have been adopted establishing the NVNG mobile-satellite service, and three applications are pending. See NVNG MSS Order, note 48, *supra*.

[240] See paras. 44–45, *supra*.

[241] There is also support in antitrust law and policy for examining potential competition for that purpose. See Implementation of Sections 3(n) and 332 of the Communications Act, Regulatory Treatment of Mobile Services, Amendment of Part 90 of the Commission's Rules To Facilitate Future Development of SMR Systems in the 800 MHz Frequency Band, Amendment of Parts 2 and 90 of the Commission's Rules to Provide for the Use of 200 Channels Outside the Designated Filing Areas in the 896–901 MHz and 935–940 MHz Band Allotted to the Specialized Mobile Radio Pool, GN Docket No. 93–252, PR Docket No. 93–144, PR Docket No. 89–553, FCC 94–212, at paras. 69–70, (released Sept. 23, 1994).

[242] We emphasize that our decision with regard to the regulatory status of the provision of space segment capacity is taken pursuant to the Commission's authority under Section 332(c)(5). Therefore, our actions here should not be viewed as altering our decision in the CMRS Second Report and Order regarding individualized or customized service offerings made by CMRS providers to individual customers. As we explained in the CMRS Second Report and Order, individualized or customized offerings will be classified and regulated as CMRS, regardless of whether such offerings would be treated as common carriage under existing case law, if the service falls within the definition of CMRS. See CMRS Second Report and Order note 220, *supra*, at 1439 and n.130. We also explained that the public availability prong of the CMRS definition is met unless the service is used for a licensee's internal use or if Commission rules limit eligibility to specified user groups. *Id.* at 1441.

[243] See CMRS Second Report and Order, note 220, *supra*, at 1475–90.

[244] See 47 CFR 20.15.

[245] See AirTouch Comments at 4–7. *See also* TRW Comments at 161–163.

[246] See Ellipsat Comments at 46; AirTouch Comments at 5–6; Motorola Comments at 66–67.

[247] Motorola Comments at 66–67.

[248] LQP Comments at 99.

[249] See, e.g., Motorola Comments at 67; TRW Comments at 161–162 (noting that global geostationary satellite systems, like Panamsat, also have found it necessary to form partnerships with foreign companies in order to raise foreign capital).

[250] Technically identical satellites must have identical satellite antenna footprints and transmission parameters. They need not, however, have the identical physical structure or microelectronics.

system is authorized. Any spares or replacements that do not fall under the blanket authorization will need separate authorizations to build, launch and operate, but their terms will expire concurrently with the blanket authorization. As proposed in the Notice, the license will run from the date on which the first space station in the system begins transmissions and will be valid for a ten-year period.

183. Some applicants urge us to permit replacement satellites that are "functionally equivalent" to those authorized or have "the same particulars of operation," to enable them to more readily include evolutions in design into newer satellites. These are the same proposals and arguments we rejected when we adopted the blanket authorization standards for NVNG MSS satellites.[251] In the absence of arguments or evidence demonstrating that the NVNG MSS service is not analogous to the Big LEO service, we continue to believe our interests in assuring the continued compatibility of the subject systems with other users of the spectrum outweigh any convenience for licensees in a laxer standard. A modification application to upgrade satellite design will not be unduly burdensome and should not impede technical innovation.

184. We also deny the request of LQP and Constellation that a licensee be permitted to put "spare" satellites into service under their blanket license in order to enhance their systems. These parties would require only that there be no overall increase in effective isotropically radiated power (e.i.r.p.), pfd, or any other sharing criterion, and argue that this policy would allow licensees to increase path diversity, which can be a significant service improvement for CDMA systems. We are not convinced by LQP and Constellation that other operators would not be affected by the operation of facilities that have not been specifically analyzed and appropriately authorized. Accordingly, we affirm our requirement that any satellites that an applicant wishes to include in its system must be specified in its initial application or a modification application.

185. We proposed in the Notice that license terms will begin automatically with the first transmission from the first authorized satellite, and will continue for ten years.[252] All parties agree with the length of the license term. One party proposes that a license term should commence only after commencement of actual service or within six months of launch, whichever occurs first. Apparently, the concern is that the license term will begin to run before a licensee has launched a sufficient number of satellites with which to begin commercial operations. This overlooks our general policy that, because all transmissions are capable of causing interference, satellite license terms in all satellite services begin when radio transmissions commence. We will not treat Big LEO operators differently by permitting them to engage in any transmissions, whether those transmissions are to test the system's functioning or to provide a fully implemented commercial service, without a valid operating license. Further, we do not believe that Big LEO operators will be unduly burdened if the license term for the system begins to run on the date of the first transmission. If fuel is left on the satellite after its license term has expired, we will entertain a request for special temporary authority to continue to operate if that location has not been assigned to a new system.[253] Thus, we adopt our rule as proposed.

186. We also proposed a filing window for system replacement applications identical to the one implemented in the analogous NVNG MSS service. Specifically, we proposed that applications for the next generation Big LEO systems must be filed no earlier than three months prior to and no later than one month after the end of the seventh year of the existing license.[254] Motorola, LQP and Constellation variously contend that some replacement applications could affect other licensees' rights and thus potentially affected licensees should be able to file replacement applications earlier. No party has explained, however, why our proposed rules fail to provide adequate opportunity for affected entities to respond to proposed replacement systems, thus protecting their rights. We will therefore adopt the filing window for replacement systems as proposed.

187. In the Notice, we stated that we intend to grant replacement applications if frequencies remain available for use by such systems, consistent with our practice for other satellite services.[255] Three applicants urge us to adopt an explicit replacement expectancy, with TRW proposing a specific provision that would provide such an expectancy upon a licensee's consistent regulatory compliance. The Commission, however, has historically rejected establishing an explicit replacement expectancy for space station systems.[256] We have repeatedly noted circumstances such as intervening international agreements or changes in technology may affect our determination as to whether a replacement system would serve the public interest. We assure Big LEO licensees that given the enormous investment necessary to construct and operate a satellite system, we will consider replacement applications in this service similar to other satellite services, that is, we will grant authority to implement a next generation system unless extraordinary circumstances prevent us from doing so.

3. Implementation Milestones

188. As proposed in the Notice, we will adopt a set of satellite construction milestones modeled on those used in the NVNG MSS service. All parties agree that implementation milestones to monitor the progress of system implementation are advisable, and most parties approve of the essential elements of our proposed milestones, with certain minor clarifications and modifications, some of which we are adopting.

189. Each licensee will be required to adhere to a strict timetable for the system implementation. Failure to meet this timetable will render the authorization null and void. We will generally require each licensee to begin construction of its first two satellites within one year of the unconditional grant of its authorization, and complete construction of those first two satellites within four years of that grant. Construction for the remaining authorized operating satellites in the constellation must begin within three years of the initial authorization, and the entire authorized system must be operational within six years.[257] While we do not intend to deviate from these requirements for commencing construction, we may authorize a different schedule if an applicant concretely demonstrates that its

[251] See NVNG MSS Order, note 48, *supra*, at 8452.

[252] This follows the one-step processing and licensing policy that has been used for satellites since 1980. See 1980 Assignment Order, 84 FCC 2d 584 (1981).

[253] In the past, we have granted such requests when continued operations will not prevent a state-of-the-art satellite from taking its place. See, *e.g.*, Hughes Communications Galaxy, Inc., 9 FCC Rcd 217 (1994); Hughes Communications Galaxy, Inc., 9 FCC Rcd 218 (1994); and American Telephone and Telegraph Co., 8 FCC Rcd 8741 (1993).

[254] Proposed § 25.120(e).

[255] Notice, note 2, *supra*, at n. 134.

[256] See, *e.g.*, Assignment of Orbital Locations to Space Stations in the Domestic Fixed-Satellite Service, 3 FCC Rcd 6972 (*1988 Assignment Order*), at n. 31.

[257] Some applicants' suggestions for additional milestones are based on their mistaken belief that the Notice did not include a final system completion requirement.

proposed system's size and/or complexity warrants additional time because of the size or complexity of its proposed system.[258] In every case, the licensee's individual milestone timetable will be set and become a condition of its authorization. Some parties propose that we consider granting extensions of time to a licensee that has launched at least part of its system. We will not adopt such a provision, which would suggest that we will not enforce strictly the system completion requirement. Incomplete systems will not justify the reservation of the orbit/spectrum resource from other potential users, and applicants should not anticipate that their authorization will require anything less than a complete commitment of those resources necessary to execute the full global system upon which their authorization is premised.

190. We also will not impose a separate deadline for construction of in-orbit spares. We will leave the determination of what is an appropriate timetable for building or launching in-orbit spares to each licensee. It is reasonable to believe that if the rest of the system is implemented in a timely fashion, any in-orbit spares will also be put into place on a timetable deemed prudent by the operator. Moreover, we do not wish to discourage applicants from proposing as many in-orbit spares for inclusion in their initial blanket authorizations as they deem appropriate.

191. Some of the parties ask us to forego the construction commencement milestone in favor of a timetable that would focus only on the initiation of commercial service. They primarily contend that our milestones are unfair to those systems that could begin to provide service in stages (and, presumably, finance construction of the last satellites from initial revenue streams). We are concerned, however, that such a timetable would prevent prompt identification and elimination of those applicants that are not, for whatever reason, committed to building a system expeditiously that is capable of providing global service.[259] Most applicants fully support a global coverage requirement.[260]

192. Several applicants suggest that we adopt a more detailed standard or a series of milestones to enable us to track implementation progress more closely. LQP argues that this could result in long undetected delays in progress. We do not believe interim milestones are necessary. The annual reporting requirements (further discussed below) and our ability to demand additional contract and construction information should enable us to respond promptly to any implementation failures.

193. Motorola suggests that we require a specific and significant portion of the ground segment to be constructed on the same timetable as the space segment.[261] Such a requirement, opposed by all other applicants, is undesirable. As noted, service provision in foreign countries will be subject to a particular country's authorization. We cannot require a licensee to meet an implementation milestone when its ability to do so is outside of its control. In any event, licensees that have launched enough satellites to provide service should have no difficulty constructing their corresponding earth segments.

4. Reporting Requirements

194. We will also generally follow the NVNG MSS rules for annual reporting requirements for this service, as proposed in the Notice and supported by most parties. Every licensee must provide an annual report fully describing the status of its construction, system loading and any outages or malfunctions that have occurred during the reporting period. These reports will be required on June 30 of each year.

195. Although several applicants argue that the information requested is either too burdensome or too proprietary in nature for dissemination, we believe this information is needed to allow us to evaluate whether, and to what extent, the spectrum is being used and to monitor construction progress. Licensees may request confidentiality for any portion of their report, pursuant to § 0.459 of the Commission's rules, 47 CFR 0.459. As proposed in the Notice, we will also require that each licensee to certify to us within ten days of the date of any milestone requirement that the milestone was met or to advise us that it was not.

5. Distress and Safety Communications

196. Although Big LEO applicants did not indicate that they plan to use their systems for extensive distress and safety communications, we recognized in the Notice that because these systems have position determination capability,[262] they have the potential to complement existing search and rescue (SAR) and disaster response services. Further, although we recognize that Big LEO services cannot be used in lieu of distress beacons, such as satellite emergency position locator transmitters or emergency indicator radio beacons, that are required to be carried by international agreement or statute,[263] Big LEO system operators have certain obligations relating to maritime distress communications under sections 321(b) and 359 of the Communications Act, 47 U.S.C. 321(b), 359.[264] Other than these mandated requirements, we did not propose to require Big LEO systems to provide search and rescue or disaster response communications as a general service offering. We stated, however, that we expected that any satellite licensee that chose to offer emergency or safety communications services will coordinate its effort with the appropriate search and rescue organizations.[265] These requirements were contained in proposed rule § 25.143(f).

197. Mr. Bernard Trudell (Trudell) states that in cases of emergency all MSS providers should be required to comply with standards and call routing that will ensure the safety and well being of the public.[266] Additionally, Trudell states that most MSS providers

[258] See Notice, note 2, *supra* at 1136.

[259] Any applicant whose financial capability would be so constrained by the proposed construction milestones likely will not meet our financial qualifications. The milestones and the financial requirements provide a balanced approach to determining the actual capability of the applicants to implement the system and service they propose.

[260] See paras. 21–23, *supra*.

[261] Motorola would require a ground segment covering 75% of the world's population and 75% of the world's land area within six years of initial system authorization.

[262] See para. 104, *supra*.

[263] Compulsory equipment carriage requirements are established in portions of the Commission's rules as well as by statute. See, *e.g.*, 47 CFR 80.801, *et seq.*; Ch. IV, International Convention on the Safety of Life at Sea, 32 U.S.T. 47, T.I.A.S. 9700 (1974).

[264] Specifically, Section 321 of the Communications Act, 47 U.S.C. § 321, requires, *inter alia*, that all radio stations including Government stations and foreign ship stations within U.S. territorial waters, give absolute priority to radio communications or signals relating to ships in distress. Section 359 of the Communications Act, 47 U.S.C. 359, *requires, inter alia*, that U.S. ships that encounter dangers to navigation such as, dangerous ice or winds whose force is 10 or above on the Beaufort scale must transmit such information to ships in the vicinity and authorities on land. Section 359 also prohibits ships or mobile stations from charging for transmitting messages related to dangers to navigation.

[265] For example, the Interagency Committee on Search and Rescue (ICSAR) is composed of representatives from seven Federal Agencies, including the FCC, and has search and rescue responsibilities in the United States. Any satellite operator offering emergency services within the United States should coordinate the establishment of emergency services and procedures for its use with this organization. Similar procedures should be developed with all other domestic and international search and rescue organizations so that coordinated rescue operations can be quickly effected in the geographic area of concern.

[266] Trudell Comments at 4.

indicated that they would provide distress and safety services in part as justification for license authority.[267] Trudell concludes that the Commission should require MSS providers to address these issues. The U.S. Coast Guard (Coast Guard) states that it will depend increasingly on 9–1–1 type services and caller ID for its SAR operations and to prevent hoaxes. It requests, therefore, that Big LEO systems be required to provide standard location and caller ID information.[268] Several commenters expressed similar opinions stating, generally, that the Commission should require that Big LEO systems be required to provide standardized information that would identify the calling party, give the calling party's location and route emergency messages to an appropriate emergency organization.[269] The Interagency Committee for Search and Rescue [270] (ICSAR) noted all proposed Big LEO providers had stated that their systems will be available for distress and safety communications and recommends that the Commission develop requirements to ensure that MSS systems meet public safety needs.[271] ICSAR also recommends that these issues—standardized location, caller ID and routing of emergency or distress calls—be addressed in a separate rule making.[272] The National Emergency Number Association states that the Commission should adopt a rule to require that licensees of Big LEO systems cooperate in the provision of National Security and Emergency Preparedness (NS/EP) communications.[273]

198. LQP states that it supports the Commission's proposed rule regarding distress and safety communications and in principle its obligation regarding distress communications, but opposes having to provide search and rescue or disaster response communications as a general service offering.[274] LQP stated that the Commission should follow its decision reached in the Little LEO proceeding.[275] Motorola states that it does not object to the proposed rule and notes that consistent with the Commission's decision in the Little LEO proceeding, the Commission did not intend to require that Big LEO MSS licensees show specific means of interconnection to route distress calls and did not intend for big LEO MSS stations to be used in lieu of emergency beacons required to be carried by international agreement or statute.[276] Motorola strongly opposes the imposition of a specific technical model for the 9–1–1 interconnection and location information delivery.[277]

199. Many of the Big LEO applicants acknowledge that they may carry distress and safety or disaster response communications. They argue that this would be, however, no different than the capability of cellular radios today or future personal communications services that may be used in the event of a distress or an emergency. In the Notice, we reminded licensees of their obligations under the Communications Act regarding distress communications and noted the potential for such systems to complement existing services, but, also recognized that Big LEO systems are not intended to replace existing international safety services. Further, the Commission has begun to examine matters related to enhanced 9–1–1 capability including position locations in PCS, cellular and other mobile services in a recently initiated rule making.[278] We are, therefore, denying commenters requests that the Commission require caller ID, standardized position information and automatic routing for distress and safety communications or disaster response communications. We will address those issues in our rulemaking proceeding on enhanced 9–1–1 capability,[279] and we will adopt section 25.143(f) substantially as proposed.

200. We also noted, however, that we expected any satellite licensee that chose to offer emergency or safety communications to coordinate with appropriate SAR organizations.[280] No commenters opposed this suggestion and we are adding it to the proposed rule.

201. Comsat states that because of the critical nature of distress and safety communications to the maritime community and the extensive international effort that is underway to implement the Global Maritime Distress and Safety System (GMDSS),[281] the Commission should determine the extent to which applicants for Big LEO systems will provide distress and safety communications and participate in the GMDSS.[282] Mobile Datacom requests clarification of the proposed requirement for position determination capability for Big LEO systems related to distress communications.[283] Specifically, it requests that the Commission clarify whether Big LEO systems will be permitted to arrange for radio determination satellite service (RDSS) from companies such as Mobile Datacom.[284].

202. As we noted in paragraph 86 of the Notice, Big LEO systems may not be used in lieu of emergency beacons required to be carried by statute or treaty. In response to Comsat's request, we note that Big LEO systems cannot now be used to comply with the requirements of the GMDSS. The requirements for GMDSS equipment and the approval process are contained in §§80.1101 and 80.1103, respectively, of the Commission's Rules.[285] There are, however, no restrictions prohibiting any Big LEO system from carrying distress and safety communications on an ancillary basis. Finally, in response to Mobile Datacom's request for clarification of whether position determination information can be supplied by an RDSS licensee, we proposed that Big LEO systems be capable of determining the position of a user transceiver, but did not specify how licensees have to derive the

[267] *Id* at 2.

[268] Coast Guard Comments at 1.

[269] See, *e.g.*, Comments of the National Association of EMS Physicians at 1; Comments of the Texas Advisory Commission on State Emergency Communications at 2, Reply Comments at 2; Reply Comments of the National Institute for Urban Search and Rescue at 2 and 3; and Reply Comments of the National Emergency Number Association at 3.

[270] ICSAR is made up of representatives from seven Federal agencies including the Federal Communications Commission. This Committee has search and rescue responsibilities under the United States National Search and Rescue Plan.

[271] ICSAR Reply Comments at 2.

[272] *Id.* See also Summary of Pertinent Comments attached to ICSAR's Reply comments for a summary of issues.

[273] National Communications System Comments at 2.

[274] LQP Comments at 116, Reply Comments at 94. *See also* Comments of TRW at 193 and Constellation Reply Comments at 54.

[275] See NVNG MSS Order, note 48, *supra*, at 8458.

[276] Motorola Comments at 68.

[277] See Motorola Reply Comments at 54–55.

[278] See Second Report and Order, Gen. Docket No. 90–314, 8 FCC Rcd 7700 (1993), at para. 139. Notice of Proposed Rulemaking in CC Docket No. 94–102, FCC 94–237 (adopted September 19, 1994) (Enhanced 9–1–1 Notice).

[279] *Id.*

[280] See Notice, note 2, *supra*, at para. 86.

[281] Certain U.S. ships are required to carry radio equipment. Carriage requirements are established by statute, treaty and in the Commission's Rules. See, Sections 351 through 386 of the Communications Act of 1934, 47 U.S.C. 351–386; Amendments to the 1974 SOLAS Convention concerning Radiocommunications for the Global Maritime Distress and Safety System, Ch. IV, International Convention for the Safety of Life at Sea, 32 U.S.T. 47, T.I.A.S. 9700 (1974); and subparts Q, R, S, T and W of the Commission's Rules, 47 CFR subparts Q, R, S, T and W.

[282] COMSAT Comments at 14.

[283] Mobile Datacom apparently believes that the Commission proposed a requirement for position information because of the requirements in the Communications Act related to distress and safety communications. The proposed requirement for position information is, however, related to interference protection for the radio astronomy service.

[284] Mobile Datacom Comments at 14.

[285] See 47 CFR 80.1101 and 80.1103.

position information. We believe that decision is best left to the system provider. In conclusion, we are clarifying the language in Section 25.143(f) regarding a licensee's responsibility to protect distress communications and to make clear that although it is the licensee's responsibility to determine position information of transceivers that we are not prescribing how this must be accomplished.[286]

6. Other Requirements

203. As proposed in the Notice and without objection from any interested parties, we will adopt a specific rule that prohibits any licensee from selling a bare license for a profit.[287] This provision is critical to discourage speculators and to prevent unjust enrichment of those who do not implement their proposed systems. This provision is not intended to prevent the infusion of capital by either debt or equity financing, but any such transaction will be monitored to ensure that it does not constitute an evasion of our anti-trafficking provision.[288] This rule, however, will not apply if auctions are implemented. It is not intended to prohibit applicants who obtain licenses by competitive bidding from negotiating post-auction resale transactions.[289]

204. In the Notice, we also requested comment on whether any additional public service requirements should be imposed on Big LEO licensees. Those favoring such a requirement were instructed to provide an analysis of the utility of Big LEO systems to provide these services and an analysis of the existing systems used to provide these services, including their costs. Several commenters recognize the important potential of MSS for educational and public service uses.[290] The Corporation for Public Broadcasting (CPB), for example, discusses the promise of Big LEO systems to provide educational services to those in remote areas and to allow users throughout the world to take "electronic field trips." CPB urges that to ensure public access to these services, the Commission should require licensees to make their systems available to educators and students at preferential rates. It further argues that even if the Commission does not mandate a rate preference in this proceeding, it should consider imposing such a requirement in a variety of other services.

205. None of the LEO applicants support a mandatory service or preferential rate requirement. Ellipsat notes that MSS systems are unsuitable for providing the envisioned services. According to Ellipsat, Big LEO systems have inherently low data rates and cannot supply the high bandwidth required to support the contemplated educational services without drastically absorbing MSS capacity.[291] Motorola further argues that requiring Big LEO operators to dedicate a portion of their capacity to non-revenue generating activities would unduly constrain MSS systems and would handicap them in their ability to compete with other wireless services and with foreign MSS providers.[292] TRW and Motorola argue that none of the proponents of such a requirement have provided a detailed analysis of existing systems and costs, as required. In the absence of this analysis, they conclude that there is no basis upon which the Commission could impose public service requirements.[293]

206. In light of the service hardships alleged by the system proponents, we believe that a strong demonstration of need and feasibility is required prior to adopting specific public service requirements for Big LEO systems. We agree with Motorola and TRW that there is not sufficient information in this record to support such requirements at this time.

207. The National Communication Systems (NCS) believes that Big LEO licensees should be required to cooperate in providing national security/emergency preparedness services (NS/EP) and that any discussion of technical requirements for Big LEO systems should address survivable and endurable communications. NCS does not propose specific rules but instead requests that the Commission consider these issues in its report and order. We note that the Commission has chartered a federal advisory committee, the Network Reliability Council (NRC), to consider whether and to what extent essential services, including emergency 9–1–1 service, health, safety and other emergency communications services, are compromised during network outages.[294] The NRC agreed that national security would be included within the topic of emergency services pursuant to its charter.[295] We further note that on September 19, 1994 the Commission adopted a Notice of Inquiry requesting comment on the extent to which mobile radio services, including LEO MSS, should be required to meet compatibility requirements with 9–1–1 services.[296] The Commission will consider issues regarding the availability of reliable emergency services in these proceedings.

F. Mobile Earth Station Licensing

208. In the Notice, the Commission proposed a licensing procedure for the earth station segment of the satellite system. We indicated that the ground segment will be comprised of central fixed-earth "gateway" stations operating in the feeder link frequency bands, mobile user transceiver units operating in the mobile satellite frequency bands, and tracking, telemetry and command (TT&C) earth stations operating in either the feeder link, mobile service or space bands. We proposed to license gateway and TT&C stations as fixed-satellite earth stations under Part 25. In addition, we proposed a blanket licensing approach for the user transceivers. Under this approach, a service vendor, which may or may not be the space station licensee, would hold the authorization and would be responsible for a specified number of technically identical transceiver units. Blanket applications would include a demonstration that the operation of transceivers will not interfere with other authorized users. License term would be ten years from date of grant and requests for additional units would be treated as minor license modifications.[297] In addition, we proposed that an end user be required to obtain authorization of the space station operator before the user may transmit to that system and, that once access authority is obtained, the operations of that transceiver would fall under the blanket earth station

[286] TRW states that Big LEO system licensees operating on U.S. territorial waters are required to give priority to distress communications. See TRW Comments at 194. Motorola stated that the requirements of proposed rule section 25.143(f) would apply only for MSS stations used to comply with an international agreement or statute. See Motorola Comments at 68 and Reply Comments at 58.

[287] See Notice, note 2, *supra*, at para. 84.

[288] Motorola is concerned that one applicant might prop up another simply to guarantee access to the maximum possible spectrum by CDMA operations. This concern can be appropriately addressed as a real party in interest question if the issue arises. Motorola's speculation about a possible future occurrence does not warrant further consideration or action at this time.

[289] See para. 96, *supra*.

[290] See Joint Comments of the Association of America's Public Television Stations and Public Broadcasting Service at 2; Comments of National Public Radio at 2; Comments of the Corporation for Public Broadcasting at 2–3.

[291] Ellipsat Reply Comments at 36.

[292] Motorola Reply Comments at 58.

[293] TRW Reply Comments at 95; Motorola Reply Comments at 59.

[294] See 59 FR 31246 (June 17, 1994).

[295] See Minutes of the Network Reliability Council Meeting, July 6, 1994.

[296] See Enhanced 9–1–1 Notice, note 278, *supra*.

[297] See proposed §§ 25.115(d), 25.130(b), 25.133(b), 25.136, and 25.213.

license of the space station operator or the vendor. Our proposed rules would not preclude bilateral, government-to-government discussions regarding international roaming arrangements. They would also permit roaming into the United States by users having technically compatible transceivers designed to operate with U.S. licensed systems and once authorized to access a U.S. system, a roaming user's transceiver operations would fall within the blanket license of the satellite operator or the service vendor. The regulatory treatment of earth station licensees providing commercial mobile radio services would be as common carriers.[298]

209. The comments received in response to our proposals were favorable[299] and thus we will adopt the rules substantially as proposed. Constellation and Motorola, suggested several minor clarifications to the final rules and we will adopt these suggestions.[300] We will not, however, adopt at this time a complete revision of § 25.115, Applications for Earth Station Authorizations, as suggested by Motorola. If experience with these licensing procedures indicates that this rule, as it applies to the Big LEO service, needs to be amended, we will consider doing so at a later time.[301]

G. International Issues

1. Coordination

210. As we stated in the *Notice*, non-geostationary mobile satellites, in their orbits around the world, will pass over all countries. Because these systems provide global coverage, each will require global coordination. As with all satellite services, each Big LEO applicant and licensee will be required to provide the Commission with all information necessary for advance publication, coordination, and notification of frequency assignments pursuant to the international Radio Regulations and for consultation pursuant to Article 14 of the INTELSAT Agreement and Article 8 of the INMARSATQ Convention.[302]

211. Furthermore, the ITU (WARC-92) has adopted Resolution 46 to govern the coordination of mobile satellite systems in this frequency band. This procedure assures that worldwide coordination is accomplished in a manner that requires both the administration proposing the system and the administration that is affected by the planned system to cooperate in resolving coordination difficulties.[303] We agree with LQP and TRW that successful coordination under Resolution 46 is not a prerequisite for licensing, launching and operating these systems.[304] We note, however, that until they successfully complete coordination they cannot cause harmful interference to other primary services operating in these frequency bands, nor can they claim protection. We, however, will follow the coordination procedures prescribed by the ITU and will work with the global community to promote mobile satellite services through the development of sharing techniques and the exploration of other technical issues.[305] Moreover, as we stated in our *Notice*, we will continue to require our licensees to meet both their international obligations and any national requirements imposed by other licensing administrations regarding operations within their territories.[306] We continue to believe that decisions relating to the implementation of Big LEO service within a country's territory will remain within that country's jurisdiction and control.

212. In the Joint Proposal, the parties state that the Commission should establish a global band segmentation sharing plan different than the spectrum domestic spectrum plan. Specifically, the parties state that outside of North America, CDMA MSS licensees should be limited to operating their systems over 9.75 MHz of spectrum at 1610–1619.75 MHz and that the TDMA MSS licensee should be limited to operating its system over 6.75 MHz of spectrum at 1619.75–1626.5 MHz. According to the Joint Proposal, all U.S. international coordination activity should be based either on the domestic band segmentation plan we are adopting today, or, outside North America, on the proposed global plan. In addition, the parties to the Joint Proposal request the Commission to prohibit MSS licensees from seeking or accepting an exclusive assignment in the 1.6 GHz band that would preclude other MSS systems from providing service in any foreign country. LQP objects to these proposals, stating that they could be construed as preempting other nations' sovereign decisions.

213. We will not impose a global band sharing plan on U.S. licensees at this time. The four parties to the Joint Proposal have not given any justification for doing so, and one applicant specifically opposes the imposition of such a plan. We have no evidence on the record before us of imminent coordination conflicts among the applicants beyond U.S. borders. Neither is it clear at present that operating constraints designed to accommodate our domestic licensees will provide either necessary or effective in other jurisdictions. Perhaps most importantly, we do not believe it is appropriate for the United States to impose global band sharing restrictions, that directly impact the ability of other countries to access these systems as they see fit, absent indications from these countries regarding their planned use of these frequency bands. Accordingly, we will not mandate a band sharing scheme to be followed beyond U.S. borders.

2. EC Concerns

214. The Delegation of the European Commission (EC) is concerned that the proposals in the Notice are based purely upon domestic U.S. interests despite the global nature of the proposed systems and services. Specifically, the EC alleges that the Notice: (1) Fails to take into account proposed non-U.S. or future systems, their access to the U.S. market and use of spectrum in the U.S.; (2) indicates an intention to extend Section 310 restrictions to the proposed systems inhibiting potential European investment; (3) advances trade and industrial policy arguments underlining the importance of the proposed systems

[298] See Notice, note 2, *supra*, at paras. 88–90.

[299] See e.g., Comments of TRW, Inc. and Comsat Corporation.

[300] These include adding to § 25.115(d)(3) the words "if not already licensed under this subpart" to clarify that gateway, TT&C and Network Control earth stations can be licensed under other procedures; adding to § 25.120(e) language relating to renewals and cut-off periods; clarifying § 25.136(b) to distinguish between authorization of a particular unit and use of the system; clarifying § 25.130(b) to recognize specific procedures for NVNG MSS transceiver units; and clarifying § 25.136(a) to include cockpit communications.

[301] Other than § 25.213(b), we will not adopt specific technical requirements for Big LEO transceivers at this time. These requirements are being considered in domestic and international fora and will be codified, if necessary, when earth station applications have been filed. We note that user transceivers will be required to comply with all applicable domestic and international standards governing their operations, including the radiofrequency radiation levels recommended by the American National Standards Institute (ANSI). See 47 CFR 1.1.1307(b).

[302] See 47 CFR 25.111(b).

[303] ITU Resolution No. 46 (WARC-92, Res. 46) states that "[a]ffected administrations, as well as the administration seeking coordination, shall make all possible mutual efforts to overcome the difficulties in a manner acceptable to the parties concerned."

[304] See LQP Comments at 117 and TRW Comments at 196. However, as we stated in our Notice, if a licensee has not completed coordination prior to launch, it must operate on a non-interference basis with respect to authorized users. See International Radio Regulation (RR) 342.

[305] Indeed, the United States participates actively in ITU-R Study Groups 2, 4 and 8, all of which are examining issues that address sharing and coordination of MSS systems.

[306] To the extent a licensee does not desire to meet a national requirement of a licensing administration within its territory, it may refrain from providing service to that particular administration. See TRW Comments at 196.

to the U.S. economy and U.S. leadership; (4) proposes unilateral solutions to orbit, frequency and coverage issues that are global in nature; (5) fails to discuss requirements to effect the satisfactory application of Resolutions 46 and 70 of WARC–92; and (6) fails to address issues related to the 2 GHz band. The EC states that the regulatory approach that we proposed raises global regulatory and trade issues and that the U.S. should not proceed with its domestic licensing process until it consults with foreign administrations.

215. We agree that the proposed systems have international ramifications. Many of these are or will be addressed in appropriate international fora and in ITU satellite coordination activities. Others may be appropriate for bilateral consultations of the nature sought by the EC. However, we do not agree that the U.S. domestic licensing process must await final resolution of these issues.

216. We find delaying the U.S. licensing process is unacceptable. Delaying our regulatory process would delay the improved communications and economic growth that Big LEO services will create. These benefits would be developed both for citizens of the United States and all other countries that may choose to participate in rendering these services. Such a delay would also harm developing countries by limiting their opportunity to improve their communications infrastructure. The uncertainty associated with delay could also adversely impact the viability of the proposed systems in the financial markets and the ability of the applicants to attract additional investors. U.S. applicants have already invested significant resources in research and development, satellite design, marketing and participation in ITU meetings and conferences. Even if the United States were to delay its licensing process, it is unclear how the EC proposes to resolve the issues it has identified, resulting in open-ended delay. Further, the EC's criticism of our proposals is not accompanied by recommendations. Indeed, it is not clear that the EC is yet in a position to speak authoritatively for its member countries. We do not believe that an indefinite delay in the U.S. regulatory process under such circumstances is warranted.

217. It is also clear that we do not need to delay the domestic licensing proceeding until international agreements are finalized. Regardless of our domestic decisions, each administration will retain the right to license gateway earth stations and mobile earth stations needed to provide service. In addition, U.S. licensees will be subject to ITU recommendations and coordination procedures. Further, the United States is working with the ITU Radio Communications sector to develop standards applicable to LEO systems. However, we seek to leave system design and service offerings to the licensees as much as possible in order to encourage technological innovation, to promote rapid implementation of Big LEO services and to maximize consumer choice. Therefore it is in the interest of the United States government and U.S. system operators to seek globally acceptable standards and we will strive to do so. We disagree with the EC that we are not taking into account projects envisaged outside the United States and future global systems that might use the spectrum. In the Notice, we noted that all U.S. satellite systems are subject to ITU coordination procedures.[307] Thus, U.S.-licensed operators are required to coordinate their proposed systems with countries whose existing services, or whose possible future MSS systems, might be affected. Regardless of the spectrum licensing arrangement within the United States, we would work with affected administrations to resolve any spectrum sharing or technical issues. Further, we are not precluding access to the U.S. market. We believe, however, that subject is more appropriately handled through bilateral discussions (as the EC contemplates) and the ITU coordination process.

218. In addition, we are not seeking to extend § 310 restrictions on the proposed systems with the intention of inhibiting European investment. In fact, § 310(b) restrictions will not necessarily apply to the systems because we are not requiring them to operate on a common carrier basis.[308] This policy will permit investment by European industry and other non-government interests. Some of the proposed systems already anticipate significant non-U.S. investment and continue to seek additional such participation. We recognize multinational participation as an integral part of developing a global system.

219. With regard to the EC's concern that we are advancing trade and industrial policy arguments by moving ahead with the proposed systems, we note that a report prepared by PKMG Peat Marwick on behalf of the European Commission suggests that (with regard to Europe), "* * * the *immediate* priority is international trade and policy issues;"[309] the very issues the EC accuses the United States of advancing. Notwithstanding the EC's views, the United States has every right under established ITU procedures to move forward with licensing systems that are necessary to satisfy domestic demand for new communication services. Other administrations have the right to decide whether these or any other non-U.S. licensed systems will operate in their countries and whether to participate in the provision of services. Participation in providing these MSS services will give their industries the opportunity to share in the global economic benefits we believe these systems will bring.

220. The EC also argues that the Notice proposes unilateral solutions to orbit, frequency and coverage issues that have global implications. Further, it contends that the Notice fails to discuss requirements necessary to effect the application of ITU Resolution Nos. 46 and 70.

221. With regard to orbit considerations[310] and the use of 1.6/2.4 GHz frequencies, we note that as a matter of course the United States engages in good faith negotiations with respect to whatever non-U.S. systems have been filed with the ITU at the time U.S. systems are ready to begin coordination.[311] Consequently, the use of the orbits and of frequencies by U.S.-licensed systems will be subject to the outcome of the ITU coordination process. The worldwide coverage conditions proposed in the Notice[312] result from our desire that these systems be capable of providing coverage to all areas of the world. This could further U.S. participation in the global information infrastructure and potentially benefit developing countries. Again, however, whether U.S.-licensed systems provide services outside the United States would be subject to the agreement of and authorization by other administrations.

222. With regard to the application of Resolutions No. 46 and 70, we note that Resolution No. 46 relates to "interim" procedures for the coordination and notification of non-geostationary

[307] Notice, not 2, *supra*, at para. 91.

[308] See paras. 171–181, *supra*.

[309] See "Satellite Personal Communications and their Consequences for European Telecommunications Trade and Industry," KPMG Peat Marwick, at 4, *emphasis added*.

[310] We assume here that the EC refers to non-geostationary vs. geostationary orbits.

[311] We note that the following administrations have proposed MSS systems in the 1.6/2.4 GHz bands that have been advance published, coordinated or notified with the ITU: France (2 systems); Germany; INMARSAT; Russian Federation (2 systems); Tonga (4 systems); and the United States (2 systems).

[312] Notice, note 2, *supra*, at para. 23.

satellite networks. As an interim procedure it is subject to further development and will likely evolve. Nevertheless, U.S.-licensed systems will be subject to whatever coordination procedures are in effect at the time, including Resolution 46 or its successor. In the Notice we stated explicitly that we would follow coordination procedures prescribed by the ITU, and in fact we reference Resolution No. 46 and its applicability to Big LEO systems.[313] We also note that each Big LEO applicant will be required to provide us all information necessary to advance publish, notify and coordinate their proposed systems. Implicitly, all applicants will be required to assist us in effecting whatever coordination procedures the ITU requires.[314]

223. On the other hand, Resolution 70 relates to "establishment" of standards for low-orbit satellite systems and has no requirements per se. It seeks to begin the process of establishing standards for low-orbit satellite systems and invites the appropriate ITU organs to begin studies in this regard. The United States participates in these ITU activities and will continue to do so. However, as Resolution No. 70 has not resulted in any specific ITU recommendations, it is not possible to address "requirements" in a domestic licensing proceeding.

224. Finally, the EC contends that the Notice fails to address issues related to access to 2 GHz MSS bands[315] and the relation between access to those bands and the bands under consideration here. First, we note that the 2 GHz bands have not yet been allocated for MSS in the United States. Therefore, these bands will be the subject of another proceeding. In such a proceeding, all matters relevant to the use of 2 GHz bands would be discussed. Nevertheless, we note the increasing demand for access to MSS spectrum worldwide and the potential value of the 2 GHz bands for the provision of MSS. We are also aware of proposals to use the 2 GHz bands for services similar and competitive to those envisaged by the Big LEO applicants.[316] The United States would like to facilitate access to these bands, as does the EC. We believe that WRC–95 and future multi-lateral consultations would present the appropriate fora to discuss access to and use of 2 GHz MSS bands.

IV. Final Regulatory Flexibility Analysis

225. *Need for Rules and Objective.* We have codified proposed rules that will permit Big LEO systems to be licensed. Our objectives have been to promote efficiency and innovation in the licensing and use of the electromagnetic spectrum, to develop competitive and innovative communications systems, and to promote effective and adaptive regulations.

226. *Issues Raised by the Public in Response to the Initial Analysis.* No comments were received specifically in response to the Initial Regulatory Flexibility Analysis. We have, however, taken into account all issues raised by the public in response to the proposed rules. In certain instances, we have eliminated or modified our proposed rules in response to those comments.

227. *Alternatives that would Lessen Impact.* The minimal regulatory burden that we have imposed is necessary in order to carry out our duties under the Communications Act and other Federal statutes. We will continue to examine these requirements in an effort to eliminate unnecessary regulations and to minimize significant economic impact on small businesses.

V. Conclusion and Ordering Clause

228. By our action today, we are adopting regulations that will allow the licensing of competitive voice and data Big LEO systems. This service has the potential to provide the United States public with a wide range of needed mobile voice services and to help stimulate the domestic economy as these multi-billion dollar systems are implemented in the United States and throughout the world.

229. Accordingly, *It Is Ordered* that Parts 25 and 94 of the Commission's rules are amended as specified in Appendix B, effective November 21, 1994.

230. *It Is Further Ordered* that the applicants will be required to file conforming amendments and all necessary fees no later than November 16, 1994 for continued consideration in this processing group.

List of Subjects

47 CFR Part 25

Communications common carriers, Reporting and recordkeeping requirements, Satellites

47 CFR Part 94

Communications equipment, Radio, Reporting and recordkeeping requirements

For the reasons set forth in the preamble, Title 47, Parts 25 and 94, of the Code of Federal Regulations, is amended as set forth below.

Title 47 of the Code of Federal Regulations, Parts 25 and 94, are amended as follows:

PART 25—[AMENDED]

1–2. The authority citation for Part 25 continues to read as follows:

Authority: Secs. 25.101 to 25.601 issued under Sec. 4, 48 Stat. 1066, as amended; 47 U.S.C. 154. Interprets or apply secs. 101–104, 76 Stat. 419–427; 47 U.S.C. 701–744; 47 U.S.C. 554.

3. Section 25.114 is amended by revising paragraphs (c)(6), (c)(18), and (c)(26), and adding new paragraphs (c)(28) and (d), to read as follows:

§ 25.114 Applications for space station authorizations.

* * * * *

(c) * * *

(6)(i) For geostationary satellite orbit satellites, orbital location, or locations if alternatives are proposed, requested for the satellite, the factors which support such an orbital assignment, the range of orbital locations from which adequate service can be provided and the basis for determining that range of orbital locations, and a detailed explanation of all factors that would limit the orbital arc over which the satellite could adequately serve its expected users.

(ii) For non-geostationary satellite orbit satellites, the number of space stations and applicable information relating to the number of orbital planes, the inclination of the orbital plane(s), the orbital period, the apogee, the perigee, the argument(s) of perigee, active service arc(s), and right ascension of the ascending node(s).

(iii) For 1.6/2.4 GHz Mobile-Satellite Service space stations, the feeder link frequencies requested for the satellite, together with the demonstration required by §§ 25.203 (j) and (k).

* * * * *

(18) Detailed information demonstrating the financial qualifications of the applicant to construct and launch the proposed satellites. Applications for domestic fixed-satellite systems and mobile-satellite systems shall provide the financial information required by § 25.140(b)–(e), § 25.142(a)(4), or § 25.143(b)(3), as appropriate. Applications for international satellite systems authorized pursuant to

[313] Notice, note 2, *supra*, at para. 92 and n. 149.

[314] This requirement applies to all FCC-licensed satellite systems and is codified in the FCC rules. See 47 CFR 25.111(b).

[315] The "2 GHz" MSS bands were allocated at WARC–92 as follows: 1970–1980 MHz and 2160–2170 MHz: (Regions 1 and 3)—Fixed, Mobile; (Region 2)—Fixed, Mobile, Mobile-Satellite*. 1980–2010 MHz and 2170–2200 MHz: (Regions 1, 2 and 3)—Fixed, Mobile, Mobile-Satellite*. (*=These MSS allocations are available for use after Jan. 1, 2005, except in the U.S., when they will be available after Jan. 1, 1996.)

[316] For example, the FCC has received two petitions (names) to provide MSS services in this range. In addition, spectrum in this range has been identified for a satellite component of FLMPTS.

Establishing of Satellite Systems Providing International Communications, 50 FR 42266 (October 18, 1985), 101 FCC 2d 1046 (1985), *recon.* 61 RR 2d 649 (1986), *further recon.* 1 FCC Rcd 439 (1986), shall provide the information required by that decision.

* * * * *

(26) Applications for authorizations in the Mobile-Satellite Service in the 1545–1559/1646.5–1660.5 MHz frequency bands shall also provide all information necessary to comply with the policies and procedures set forth in Rules and Policies Pertaining to the Use of Radio Frequencies in a Land Mobile Satellite Service, 52 FR 4017 (Feb. 9, 1987), 2 FCC Rcd 485 (1987).

* * * * *

(28) Applications for authorizations in the 1.6/2.4 GHz Mobile-Satellite Service shall also provide all information specified in § 25.143.

(d) Applicants requesting authority to construct and/or launch a system comprised of technically identical, non-geostationary satellite orbit mobile-satellite service space stations may file a single "blanket" application containing the information specified in paragraph (c) of this section for each representative space station.

4. Section 25.115 is amended by revising paragraph (d) to read as follows:

§ 25.115 Applications for earth station authorizations.

* * * * *

(d) User transceivers in the NVNG and 1.6/2.4 GHz Mobile-Satellite Service need not be individually licensed. Service vendors may file blanket applications for transceiver units using FCC Form 493 and specifying the number of units to be covered by the blanket license. Each application for a blanket license under this section shall include the following:

(1) A general narrative section describing the applicant and the overall system operation,

(2) A Form 430 (Licensee Qualification Report), if not already on file in conjunction with other facilities licensed under this subpart,

(3) A Form 493 for each representative type of user transceiver terminal unit,

(4) A designation of a point of contact where records of individual users will be maintained.

In addition, applicants in the NVNG MSS service shall provide the information described in § 25.135. Applicants in the 1.6/2.4 GHz Mobile-Satellite Service shall demonstrate that the stations comply with the technical requirements specified in § 25.213.

5. Section 25.120 is amended by revising paragraphs (d) and (e) to read as follows:

§ 25.120 License term and renewals.

* * * * *

(d) *Space stations.*

(1) For geostationary satellite orbit satellites, the license term will begin at 3 a.m. EST on the date the licensee certifies to the Commission that the satellite has been successfully placed into orbit and that the operations of the satellite fully conform to the terms and conditions of the space station radio authorization.

(2) For non-geostationary satellite orbit satellites, the license term will begin at 3 a.m. EST on the date that the licensee certifies to the Commission that its initial space station has been successfully placed into orbit and that the operations of that satellite fully conform to the terms and conditions of the space station system authorization. All space stations launched and brought into service during the ten-year license term shall operate pursuant to the system authorization, and the operating authority for all space stations will terminate upon the expiration of the system license.

(e) *Renewal of licenses.* Applications for renewals of earth station licenses must be submitted on FCC Form 405 (Application for Renewal of Radio Station License in Specified Services) no earlier than 90 days, and no later than 30 days, before the expiration date of the license. Applications for space station system replacement authorization for non-geostationary orbit satellites shall be filed no earlier than 90 days, and no later than 30 days, prior to the end of the seventh year of the existing license term.

6. Section 25.130 is amended by revising paragraph (b) to read as follows:

§ 25.130 Filing requirements for transmitting earth stations.

* * * * *

(b) A frequency coordination analysis in accordance with § 25.203 shall be provided for earth stations transmitting in the frequency bands shared with equal rights between terrestrial and space services, except that applications for user transceiver units associated with the NVNG mobile-satellite service shall instead provide the information required by § 25.135 and applications for user transceiver units associated with the 1.6/2.4 GHz Mobile-Satellite Service shall demonstrate that user transceiver operations comply with the requirements set forth in § 25.213.

7. Section 25.133 is amended by revising paragraph (b) to read as follows:

§ 25.133 period of construction; certification of commencement of operation.

* * * * *

(b) Each license for a transmitting earth station included in this part shall also specify as a condition therein that upon the completion of construction, each licensee must file with the Commission a certification containing the following information: The name of the licensee; file number of the application; call sign of the antenna; date of the license; a certification that the facility as authorized has been completed and that each antenna facility has been tested and is within 2 dB of the pattern specified in § 25.209, § 25.135 (NVNG MSS earth stations), or § 25.213 (1.6/2.4 GHz Mobile-Satellite Service earth stations); the date on which the station became operational; and a statement that the station will remain operational during the license period unless the license is submitted for cancellation. For stations authorized under § 25.115(c) of this part (Large Networks of Small Antennas operating in the 12/14 GHz bands) and § 25.115(d) of this part (User Transceivers in the Mobile-Satellite Service), a certificate must be filed when the network is put into operation.

8. A new § 25.136 is added to read as follows:

§ 25.136 Operating provisions for earth station networks in the 1.6/2.4 GHz mobile-satellite service.

In addition to the technical requirements specified in § 25.213, earth stations operating in the 1.6/2.4 GHz Mobile-Satellite Service are subject to the following operating conditions:

(a) User transceiver units associated with the 1.6/2.4 Mobil-Satellite service may not be operated on civil aircraft unless the earth station has a direct physical connection to the aircraft Cabin Communication system.

(b) User transceiver units in this service are authorized to communicate with and through U.S. authorized space stations only. No person shall transmit to a space station unless the specific transmission is first authorized by the space station licensee or by a service vendor authorized by that licensee.

(c) Any user transceiver unit associated with this service will be deemed, when communicating with a particular 1.6/2.4 GHz Mobile-Satellite Service system pursuant to paragraph (b) of this section, to be temporarily associated with and licensed to the system operator or service vendor holding the blanket earth station license awarded pursuant to Section 25.115(d). The domestic earth station licensee

shall, for this temporary period, assume the same licensee responsibility for the user transceiver as if the user transceiver were regularly licensed to it.

9. Section 25.141 is amended by revising paragraphs (a) and (f) to read as follows:

§ 25.141 Licensing provisions for the radio-determination satellite service.

(a) *Space station application requirements.* Each application for a space station license in the radiodetermination satellite service shall describe in detail the proposed radiodetermination satellite system, setting forth all pertinent technical and operational aspects of the system, including its capability for providing and controlling radiodetermination service on a geographic basis, and the technical, legal and financial qualifications of the applicant. In particular, each application shall include the information specified in Appendix B of Space Station Application Filing Procedures, 93 FCC 2d 1260, 1265 (1983), except that in lieu of demonstrating compliance with item II.F (two degree spacing), applicants are required to demonstrate compatibility with licensed satellite systems in the same frequency band. Applicants must also file information demonstrating compliance with all requirements of this section, specifically including information demonstrating how the applicant has complied or plans to comply with the requirements of paragraph (f) of this section.

* * * * *

(f) *Radiodetermination satellite service.* Licenses shall coordinate with radiodetermination satellite system licensees to avoid harmful interference to other radiodetermination satellite systems through:

(1) Power flux density limits;

(2) Use of pseudorandom-noise codes (for both the satellite-to-user link and for the user-to-satellite link); and

(3) Random access, time division multiplex techniques.

Licensees shall coordinate with 1.6/2.4 GHz Mobile-Satellite Service system licensees to avoid interference to 1.6/2.4 GHz Mobile-Satellite Service systems.

10. A new § 25.143 is added to read as follows:

§ 25.143 Licensing provisions for the 1.6/2.4 GHz Mobile-Satellite Service.

(a) *System License:* Applicants authorized to construct and launch a system of technically identical non-geostationary satellite orbit satellites will be awarded a single "blanket" license covering a specified number of space stations to operate in a specified number of orbital planes.

(b) *Qualification Requirements.*

(1) *General Requirements:* Each application for a space station system authorization in the 1.6/2.4 GHz mobile-satellite service shall describe in detail the proposed satellite system, setting forth all pertinent technical and operational aspects of the system, and the technical, legal, and financial qualifications of the applicant. In particular, each application shall include the information specified in § 25.114.

(2) *Technical Qualifications:* In addition to providing the information specified in paragraph (b)(1) of this section, each applicant shall demonstrate the following:

(i) That the proposed system employs a non-geostationary constellation or constellations of satellites;

(ii) That the proposed system be capable of providing mobile satellite services to all locations as far north as 70° latitude and as far south as 55° latitude for at least 75% of every 24-hour period, *i.e.*, that at least one satellite will be visible above the horizon at an elevation angle of at least 5° for at least 18 hours each day within the described geographic area;

(iii) That the proposed system is capable of providing mobile satellite services on a continuous basis throughout the fifty states, Puerto Rico and the U.S. Virgin Islands, U.S., *i.e.*, that at least one satellite will be visible above the horizon at an elevation angle of at least 5° at all times within the described geographic areas;

(iv) That operations will not cause unacceptable interference to other authorized users of the spectrum. In particular, each application shall demonstrate that the space station(s) comply with the requirements specified in § 25.213.

(3) *Financial Qualifications:* Each applicant for a space station system authorization in the 1.6/2.4 GHz mobile-satellite service must demonstrate, on the basis of the documentation contained in its application, that it is financially qualified to meet the estimated costs of the construction and launch of all proposed space stations in the system and the estimated operating expenses for one year after the launch of the initial space station. Financial qualifications must be demonstrated in the form specified in §§ 25.140(c) and (d). In addition, applicants relying on current assets or operating income must submit evidence of a management commitment to the proposed satellite system. Failure to make such a showing will result in the dismissal of the application.

(c) *Replacement of Space Stations Within the System License Term.* Licensees of 1.6/2.4 GHz mobile-satellite systems authorized through a blanket license pursuant to paragraph (a) of this section need not file separate applications to construct, launch and operate technically identical replacement satellites within the term of the system authorization. However, the licensee shall certify to the Commission, at least thirty days prior to launch of such replacement(s) that:

(1) The licensee intends to launch a space station that is technically identical to those authorized in its system authorization, and

(2) Launch of this space station will not cause the licensee to exceed the total number of operating space stations authorized by the Commission.

(d) *In-Orbit Spares.* Licensees need not file separate applications to operate technically identical in-orbit spares authorized as part of the blanket license pursuant to paragraph (a) of this section. However, the licensee shall certify to the Commission, within 10 days of bringing the in-orbit spare into operation, that operation of this space station did not cause the licensee to exceed the total number of operating space stations authorized by the Commission.

(e) *Reporting requirements.*

(1) All operators of 1.6/2.4 GHz mobile-satellite systems shall, on June 30 of each year, file with the International Bureau and the Field Office in Laurel, Maryland a report containing the following information.

(i) Status of satellite construction and anticipated launch dates, including any major problems or delays encountered;

(ii) A listing of any non-scheduled space station outages for more than 30 minutes and the cause or causes of the outage;

(iii) A detailed description of the utilization made of the in-orbit satellite system. That description should identify the percentage of time that the system is actually used for U.S. domestic or transborder transmission, the amount of capacity (if any) sold but not in service within U.S. territorial geographic areas, and the amount of unused system capacity; and

(iv) Identification of any space stations not available for service or otherwise not performing to specifications, the cause or causes of these difficulties, and the date any space station was taken out of service or the malfunction identified.

(2) All operators of 1.6/2.4 GHz mobile-satellite systems shall, within 10

days after a required implementation milestone as specified in the system authorization, certify to the Commission by affidavit that the milestone has been met or notify the Commission by letter that it has not been met. At its discretion, the Commission may require the submission of additional information (supported by affidavit of a person or persons with knowledge thereof) to demonstrate that the milestone has been met.

(f) *Safety and distress communications.*

(1) Stations operating in the 1.6/2.4 GHz Mobile-Satellite Service that are voluntarily installed on a U.S. ship or are used to comply with any statute or regulatory equipment carriage requirements may also be subject to the requirements of sections 321(b) and 359 of the Communications Act of 1934. Licensees are advised that these provisions give priority to radio communications or signals relating to ships in distress and prohibits a charge for the transmission of maritime distress calls and related traffic.

(2) Licensees offering distress and safety services should coordinate with the appropriate search and rescue organizations responsible for the licensees service area.

(g) *Considerations involving transfer or assignment applications.*

(1) "Trafficking" in bare licenses issued pursuant to paragraph (a) of this section is prohibited, except with respect to licenses obtained through a competitive bidding procedure.

(2) The Commission will review a proposed transaction to determine if the circumstances indicate trafficking in licenses whenever applications (except those involving *pro forma* assignment or transfer of control) for consent to assignment of a license, or for transfer of control of a licensee, involve facilities licensed pursuant to paragraph (a) of this section. At its discretion, the Commission may require the submission of an affirmative, factual showing (supported by affidavits of a person or persons with personal knowledge thereof) to demonstrate that no trafficking has occurred.

(3) If a proposed transfer of radio facilities is incidental to a sale of other facilities or merger of interests, any showing requested under paragraph (g)(2) of this section shall include an additional exhibit which:

(i) Discloses complete details as to the sale of facilities or merger of interests;

(ii) Segregates clearly by an itemized accounting, the amount of consideration involved in the sale of facilities or merger of interest; and

(iii) Demonstrates that the amount of consideration assignable to the facilities or business interests involved represents their fair market value at the time of the transaction.

11. Section 25.201 is amended by adding new paragraphs, in alphabetical order, to read as follows:

§ 25.201 Definitions.

* * * * *

Mobile-Satellite Service. A radiocommunication service:

(1) Between mobile earth stations and one or more space stations, or between space stations used by this service; or

(2) Between mobile earth stations, by means of one or more space stations.

This service may also include feeder links necessary for its operation. (RR)

* * * * *

1.6/2.4 GHz Mobile-Satellite Service. A mobile-satellite service that operates in the 1610–1626.5 MHz and 2483.5–2500 MHz frequency bands, or in any portion thereof.

* * * * *

12. Section 25.202 is amended by adding new paragraphs (a)(4) and (a)(5) to read as follows:

§ 25.202 Frequencies, frequency tolerance and emission limitations.

* * * * *

(a) * * *

(4) The following frequencies are available for use by the 1.6/2.4 GHz Mobile-Satellite Service:

1610–1626.5 MHz: User-to-Satellite Link

1613.8–1626.5 MHz: Satellite-to-User Link (secondary)

2483.5–2500 MHz: Satellite-to-User Link

(5) The following frequencies are available for use by the inter-satellite service:

22.55–23.00 GHz

23.00–23.55 GHz

24.45–24.65 GHz

24.65–24.75 GHz

13. Section 25.203 is amended by revising paragraph (c)(2)(vii) and adding new paragraphs (j) and (k) to read as follows:

§ 25.203 Choice of sites and frequencies.

* * * * *

(c) * * *

(2) * * *

(vii) Antenna horizon gain plot(s) determined in accordance with § 25.253(b) for satellite longitude range specified in paragraph (c)(2)(v) of this section, taking into account the provisions of § 25.253(a)(2) for earth stations operating with non-geostationary satellites.

* * * * *

(j) Applicants for non-geostationary 1.6/2.4 GHz Mobile-Satellite Service/radiodetermination satellite service feeder links shall indicate the frequencies and spacecraft antenna gain contours towards each feeder-link earth station location and will coordinate with licensees of other fixed-satellite service and terrestrial-service systems sharing the band to determine geographic protection areas around each non-geostationary mobile-satellite service/radiodetermination satellite service feeder link earth station.

(k) An applicant for a non-geostationary 1.6/2.4 GHz Mobile-Satellite Service space station or earth station that will operate with a geostationary satellite or non-geostationary satellite in a shared frequency band in which the non-geostationary system is (or is proposed to be) licensed for feeder links, shall demonstrate in its application that its proposed space or earth station will not cause unacceptable interference to any other satellite network that is authorized to operate in the same frequency band, or certify that the operations of its space or earth station shall conform to established coordination agreements between the operator(s) of the space station(s) with which the earth station is to communicate and the operator(s) of any other U.S. space station licensed to use the band.

14. Section 25.208 is amended by revising paragraph (c) to read as follows:

§ 25.208 Power flux density limits.

* * * * *

(c) In the 17.7–19.7 GHz, 22.55–23.00 GHz, 23.00–23.55 GHz, and 24.45–24.75 GHz frequency bands, the power flux density at the Earth's surface produced by emissions from a space station for all conditions and for all methods of modulation shall not exceed the following values:

(1) 115 dB (W/m^2) in any 1 MHz band for angles of arrival between 0 and 5 degrees above the horizontal plane.

(2) 115+0.5 (d–5) dB (W/m^2) in any 1 MHz band for angles of arrival d (in degrees) between 5 and 25 degrees above the horizontal plane.

(3) 105 dB (W/m^2) in any 1 MHz band for angles of arrival between 25 and 90 degrees above the horizontal plane.

15. A new § 25.213 is added to read as follows:

§ 25.213 Inter-Service coordination requirements for the 1.6/2.4 GHz Mobile-Satellite Service.

(a) Protection of the radio astronomy service in the 1610.6–1613.8 MHz band against interference from 1.6/2.4 GHz Mobile-Satellite Service systems.

(1) *Protection zones.* All 1.6/2.4 GHz Mobile Satellite Service systems shall be capable of determining the position of the user transceivers accessing the space segment through either internal radiodetermination calculations or external sources such as LORAN–C or the Global Positioning System. During periods of radio astronomy observations, land mobile earth stations shall not operate when located within geographic protection zones defined by the radio observatory coordinates and separation distances as follows:

(i) In the band 1610.6–1613.8 MHz, within a 160 km radius of the following radio astronomy sites:

Observatory	Latitude (DMS)	Longitude (DMS)
Arecibo, PR	18 20 46	66 45 11
Green Bank Telescope, WV	38 25 59	79 50 24
	38 26 09	79 49 42
Very Large Array, NM	34 04 43	107 37 04
Owens Valley, CA	37 13 54	118 17 36
Ohio State, OH	40 15 06	83 02 54

(ii) In the band 1610.6–1613.8 MHz, within a 50 km radius of the following sites:

Observatory	Latitude (DMS)	Longitude (DMS)
Pile Town, NM	34 18 04	108 07 07
Los Alamos, NM	35 46 30	106 14 42
Kitt Peak, AZ	31 57 22	111 36 42
Ft. Davis, TX	30 38 06	103 56 39
N. Liberty, IA	41 46 17	91 34 26
Brewster, WA	48 07 53	119 40 55
Owens Valley, CA	37 13 54	118 16 34
St. Croix, VI	17 45 31	64 35 03
Mauna Kea, HI	19 48 16	155 27 29
Hancock, NH	42 56 01	71 59 12

(iii) Out-of-band emissions of a mobile earth station licensed to operate within the 1610.0–1626.5 MHz band shall be attenuated so that the power flux density it produces in the 1610.6–1613.8 MHz band at any radio astronomy site listed in paragraph (a)(1)(i) or (ii) of this section shall not exceed the emissions of a mobile earth station operating within the 1610.6–1613.8 MHz band at the edge of the protection zone applicable for that site. As an alternative, a mobile earth station shall not operate during radio astronomy observations within the 1613.8–1615.8 MHz band within 100 km of the radio astronomy sites listed in paragraph (a)(1)(i) of this section, and within 30 km of the sites listed in paragraph (a)(1)(ii) of this section, there being no restriction on a mobile earth station operating within the 1615.8–1626.5 MHz band.

(iv) For airborne mobile earth stations operating in the 1610.0–1626.5 MHz band, the separation distance shall be the larger of the distances specified in paragraph (a)(1) (i), (ii) or (iii) of this section, as applicable, or the distance, d, as given by the formula:

d (km) = 4.1 square root of (h)

where h is the altitude of the aircraft in meters above ground level.

(v) Smaller geographic protection zones may be used in lieu of the areas specified in paragraphs (a)(1) (i), (ii), (iii), and (iv) of this section if agreed to by the Mobile-Satellite Service licensee and the Electromagnetic Spectrum Management Unit (ESMU), National Science Foundation, Washington, D.C. upon a showing by the Mobile-Satellite Service licensee that the operation of a mobile earth station will not cause harmful interference to a radio astronomy observatory during periods of observation.

(vi) The ESMU shall notify Mobile-Satellite Service space station licensees authorized to operate mobile earth terminals in the 1610.0–1626.5 MHz band of periods of radio astronomy observations. The mobile-satellite systems shall be capable of terminating operations within the frequency bands and protection zones specified in paragraphs (a)(1)(i) through (iv) of this section, as applicable, after the first position fix of the mobile earth terminal either prior to transmission or, based upon its location within the protection zone at the time of initial transmission of the mobile earth terminal. Once the mobile-satellite system determines that a mobile earth terminal is located within an RAS protection zone, the mobile-satellite system shall immediately initiate procedures to relocate the mobile earth terminal operations to a non-RAS frequency.

(vii) A beacon-actuated protection zone may be used in lieu of fixed protection zones in the 1610.6–1613.8 MHz band if a coordination agreement is reached between a mobile-satellite system licensee and the ESMU on the specifics of beacon operations.

(viii) Additional radio astronomy sites, not located within 100 miles of the 100 most populous urbanized areas as defined by the United States Census Bureau at the time, may be afforded similar protection one year after notice to the mobile-satellite system licensees by issuance of a public notice by the Commission.

(2) Mobile-Satellite Service space stations transmitting in the 1613.8–1626.5 MHz band shall take whatever steps necessary to avoid causing harmful interference to the radio astronomy facilities listed in paragraphs (a)(1)(i) and (ii) of this section during periods of observation.

(3) Mobile-Satellite Service space stations operating in the 2483.5–2500 MHz frequency band shall limit spurious emission levels in the 4990–5000 MHz band so as not to exceed −241 dB (W/m²/Hz) at the surface of the Earth.

(4) The Radioastronomy Service shall avoid scheduling radio astronomy observations during peak MSS/RDSS traffic periods to the greatest extent practicable.

(b) Protection of the radionavigation-satellite service. Mobile earth stations operating in the 1610–1626.5 MHz band shall limit out-of-band emissions in the 1574.397–1576.443 MHz band so as not to exceed an e.i.r.p. density level of −70 dB (W/MHz) averaged over any 20 ms period. The e.i.r.p. of any discrete spurious emission (*i.e.*, bandwidth less than 600 Hz) in the 1574.397–1576.443 MHz band shall not exceed −80 dBW.

(c) Protection of aeronautical radionavigation systems. Mobile-satellite earth stations transmitting in the 1610–1626.5 MHz band shall limit e.i.r.p. levels to no greater than −15 dB (W/4kHz) on frequencies being used by systems operating in accordance with international Radio Regulation RR 732, and to no greater than −3 dB (W/4kHz) on frequencies that are not so being used. Pursuant to international RR 731F, respectively, all mobile-satellite Earth-to-space operations in the 1610–1626.5 MHz band and mobile-satellite space-to-Earth operations in the 1613.8–1626.5 MHz band must be coordinated and notified under the procedures set forth in Resolution 46 (WARC–92). Such mobile-satellite stations shall not cause harmful interference to, or claim protection from, stations in the aeronautical radionavigation service and stations operating pursuant to international RR 732.

(d) Fixed stations operating pursuant to international Radio Regulation RR 730. Pursuant to international Radio Regulations RR 731E and RR 731F, all mobile-satellite operations in the 1610–1626.5 MHz band (Earth-to-space transmissions) and all operations in the 1613.8–1626.5 MHz band (space-to-Earth transmissions), respectively, must be coordinated with systems operating pursuant to international RR 730 according to the coordination and notification procedures set forth in Resolution 46 (WARC–92). All such mobile-satellite stations shall not cause harmful interference to, or claim protection from, stations in the fixed service operating pursuant to international RR 730.

16. A new § 25.278 is added to subpart D to read as follows:

§ 25.278 Additional Coordination Obligation for Non-Geostationary and Geostationary Satellite Systems in Frequencies Allocated to the Fixed-Satellite Service.

Licensees of non-geostationary satellite systems that use frequency bands allocated to the fixed-satellite service for their feeder link operations shall coordinate their operations with licensees of geostationary fixed-satellite service systems licensed by the Commission for operation in the same frequency bands. Licensees of geostationary fixed-satellite service systems in the frequency bands that are licensed to non-geostationary satellite systems for feeder link operations shall coordinate their operations with the licensees of such non-geostationary satellite systems.

17. A new § 25.279 is added to subpart D to read as follows:

§ 25.279 Inter-satellite service.

(a) Any non-geostationary satellite communicating with other space stations may use frequencies in the inter-satellite service as indicated in § 2.106. This does not preclude the use of other frequencies for such purposes as provided for in several service definitions, *e.g.*, FSS. The technical details of the proposed inter-satellite link shall be provided in accordance with § 25.114(c).

(b) *Operating conditions.* In order to ensure compatible operations with authorized users in the frequency bands to be utilized for operations in the inter-satellite service, these inter-satellite service systems must operate in accordance with the conditions specified in this section.

(1) *Coordination requirements with federal government users.* (i) In frequency bands allocated for use by the inter-satellite service that are also authorized for use by agencies of the federal government, the federal use of frequencies in the inter-satellite service frequency bands is under the regulatory jurisdiction of the National Telecommunications and Information Administration (NTIA).

(ii) The Commission will use its existing procedures to reach agreement with NTIA to achieve compatible operations between federal government users under the jurisdiction of NTIA and inter-satellite service systems through frequency assignment and coordination practice established by NTIA and the Interdepartment Radio Advisory Committee (IRAC). In order to facilitate such frequency assignment and coordination, applicants shall provide the Commission with sufficient information to evaluate electromagnetic compatibility with the federal government users of the spectrum, and any additional information requested by the Commission. As part of the coordination process, applicants shall show that they will not cause interference to authorized federal government users, based upon existing system information provided by the government. The frequency assignment and coordination of the satellite system shall be completed prior to grant of construction authorization.

(2) *Coordination among inter-satellite service systems.* Applicants for authority to establish inter-satellite service are encouraged to coordinate their proposed frequency usage with existing permittees and licensees in the inter-satellite service whose facilities could be affected by the new proposal in terms of frequency interference or restricted system capacity. All affected applicants, permittees, and licensees, shall at the direction of the Commission, cooperate fully and make every reasonable effort to resolve technical problems and conflicts that may inhibit effective and efficient use of the radio spectrum; however, the permittee or licensee being coordinated with is not obligated to suggest changes or re-engineer an applicant's proposal in cases involving conflicts.

PART 94—[AMENDED]

18. The authority citation for Part 94 continues to read as follows:

Authority: Secs. 4, 303, 48 Stat., as amended, 1066, 1082; 47 U.S.C. 154, 303, unless otherwise noted.

19. The table in paragraph (b) of § 94.61 is amended by revising footnote 4 to read as follows:

§ 94.61 Applicability.

* * * * *

(b) * * *

Frequencies in this band are shared with mobile and radiolocation stations in other services, and must accept harmful interference that may be experienced from operations of industrial, scientific, or medical (ISM) equipment operating at 2450 MHz. In the 2483.5–2500 MHz band, no applications for new stations or modifications to existing stations to increase the number of transmitters will be accepted. Existing licensees as of July 25, 1985, are grandfathered and their operation is co-primary with the Radiodetermination Satellite Service and Mobile-Satellite Service. However, all grandfathered temporary fixed licensees are required to notify directly each Radiodetermination Satellite Service and Mobile-Satellite Service licenses concerning present and proposed locations of operations.

Federal Communications Commission.

William F. Caton,

Acting Secretary.

[FR Doc. 94–26090 Filed 10–19–94; 8:45 am]

BILLING CODE 6712–01–M

federal register

Friday
October 21, 1994

Part VI

Department of the Interior

Fish and Wildlife Service

50 CFR Part 20
Migratory Bird Harvest Information Program; Final Rule

DEPARTMENT OF THE INTERIOR

Fish and Wildlife Service

50 CFR Part 20

RIN 1018–AC37

Migratory Bird Harvest Information Program

AGENCY: Fish and Wildlife Service, Interior.

ACTION: Final rule.

SUMMARY: The Fish and Wildlife Service (Service) and State wildlife agencies (States) are cooperatively establishing a national Migratory Bird Harvest Information Program (Program) in which migratory game bird hunters will be required to participate by supplying their names, addresses, and other necessary information to the hunting licensing authority of the State in which they hunt. Hunters will be required to have evidence of current participation in the Program on their person while hunting migratory game birds. The quality and extent of information about harvests of migratory game birds must be improved in order to better manage these populations. Hunters' names and addresses will be used to provide a sampling frame for a voluntary survey which will improve harvest estimates for migratory game birds.

EFFECTIVE DATE: This rule takes effect on October 21, 1994.

FOR FURTHER INFORMATION CONTACT: Robert L. Jessen, Migratory Bird Harvest Information Program Coordinator, Office of Migratory Bird Management, U.S. Fish and Wildlife Service, (301) 497–5980, FAX (301) 497–5981.

SUPPLEMENTARY INFORMATION: The purpose of this final rule is to facilitate the collection of needed information about the harvest of migratory game birds. A proposed rule was published on March 14, 1994 at 59 FR 11838. This final rule revises the migratory bird hunting regulations to require hunters, as a condition for hunting migratory game birds, to annually provide their names, addresses, and other necessary information to the licensing authority of the State in which they hunt. This information will provide a sampling frame for the national Migratory Bird Harvest Survey that the Service will conduct annually.

The Service and States are currently implementing this Program over a 5-year period, starting with the 1994–95 hunting season. During this implementation, the requirement to participate in the Program will not apply on Federal Indian Reservations or to tribal members hunting on ceded lands. The participating States will provide the names, addresses, and other necessary information obtained from licensed hunters. During the implementation phase the Service will work with the States to investigate and develop alternative methods for obtaining information about unlicensed hunters to facilitate their inclusion in the sample frame upon full implementation. The Program will be evaluated to determine the adequacy and timeliness of the sample and the time burden, cost, and other impacts on hunters, State license agents, States, and the Service.

The names, addresses, and other information for an adequate sample of hunters are needed in time for hunting record forms to be distributed to selected hunters before they forget the details of their hunts. Because of this fundamental need, States have only a short time to provide hunter names and addresses. The approaches used by different States will be compared. Minimum survey standards will be developed during the next 2 years to ensure the quality of survey data. As each new State is phased into the Program, an agreement will be developed with each State in order to identify and resolve specific reporting or data-capture problems. This will ensure that each State will be providing reliable survey data and that no material biases are incorporated into the system.

A Program validation (*e.g.*, "Migratory Bird Harvest Information Program Participant") will be printed on the annual State hunting license or supplementary permit for those hunters who participate in the Program. The State may charge these hunters a small handling fee to compensate agents and to cover the State's administrative costs associated with implementing the Program.

To reduce survey costs and to identify hunters who hunt less commonly hunted species, migratory bird hunters will be asked the following questions:

1. Will you hunt migratory game birds during [season]? [This screening question is needed only if a State asks all hunters to provide their names, addresses, and other information needed by the Program].

2. Please check the birds you hunted last season in the United States. [This list need only include migratory birds that are hunted in the State.]

_____ Ducks
_____ Geese
_____ Cranes
_____ Coots
_____ Snipe
_____ Mourning doves
_____ White-winged doves
_____ Band-tailed pigeons
_____ Woodcock
_____ Rails/Gallinules

3. How many of these birds did you bag last season?

	None	1–10	11–30	31+
Ducks	.....	.....	.....	.....
Geese	.....	.....	.....	.....
Doves	.....	.....	.....	.....
Wood-cock	.....	.....	.....	.....

Question #3 will identify which success category (*e.g.*, none, 1–10, etc.) a hunter was in during the previous year and will allow stratification of the sample. A stratified sample (multiplying the number of hunters in each category by the average seasonal bag per hunter in that category and then adding the results for each category) will provide a better estimate of total harvest and will not require as large a sample size as a standard sample (multiplying the total number of hunters by the average seasonal bag per hunter).

To protect hunters' privacy, it is the policy of the Service to use the names and addresses only for conducting hunter surveys and for no other purpose. All records of hunters' names and addresses will be deleted after the surveys, and no permanent record of names and addresses will be maintained by the Service. State uses of these names and addresses will be governed by State laws.

The provisions of 5 U.S.C. 553(d)(3) provides for a minimum of 30 days for a rule to become effective unless an agency, for good cause, has reason to make it sooner. The Service and the States are currently implementing this Program over a five year period at the request of the International Association of Fish and Wildlife Agencies. This rule will add Maryland to the list of States already participating. Maryland has implemented the requirements of this rule under State authority effective September 1. Therefore, the Service finds good cause to make this rule effective upon publication.

Review of Comments and the Service's Response

Comments on the proposed rule were received from 12 States. None of the comments questioned the need for the Program or for improved migratory bird harvest estimates; almost all expressed support for the proposed changes to the Program. Two States requested delays in their implementation date and four States requested advances in theirs. The Program was supported by the States of

Arizona, Arkansas, Georgia, Louisiana, Maine, Maryland, Michigan, Minnesota, Missouri, Oklahoma, Texas and Vermont.

1. Impact of Procedures on State Wildlife Agencies

Comments: Arkansas pointed out that, overall, the Program will add burdens to their Agency, license vendors, and sportsmen. They recommended reducing the hunter questions.

Service Response: Changes as described in the Proposed Rule will reduce the number of questions. Enrolling hunters in the State of hunting eliminates questions concerning species not found in that State. For example, band-tailed pigeons are restricted to western States and this question will appear only in those States. This and some combining of species, such as duck/coot, will reduce the number of questions to roughly half of the original list.

2. Service Financial Support for the Program

Comment: Louisiana stated that the amount of financial support the Service will provide States during the Implementation Phase appears to be declining. They requested firm and substantial funding support from the Service.

Service Response: This Program has always been viewed in the context of a partnership with Federal and State funds being used to implement the effort. The Service's initial estimate of financial support for the Program was contingent upon approval of two funding sources. One was from Federal Aid Administrative Funds at $500,000 annually for each of the first three years of the implementation phase. The second was from the Service's annual appropriation which, in turn, was contingent upon Congressional approval of the President's FY 1994 budget request of $750,000. The Administrative Funds were approved in full, while the Congressional appropriation was reduced to $500,000. The present schedule of payment for names and addresses is 30¢ per hunter the first 2 years in the Program and 10¢ per hunter thereafter.

3. Implementation Phase—Schedule of State Participation

Comments: Six States requested changes in their scheduled entry into the Program. Four requested to be advanced and two to be delayed. Maine requested to be moved ahead from 1998 to 1996. With the financial assistance provided by the Service, Maine will be able to adopt an automated system of issuing licenses. Oklahoma requested to move ahead from 1996 to 1995. A change in State licensing procedures will complement this agenda change. Vermont would like to advance to 1996 from their scheduled entry in 1998. Oregon has implemented a basic system of electronic license sale and is prepared to enter the program in 1995. Texas requested to move back from 1994 to 1995. Texas is working on several license-system changes and would like to implement these changes and the Harvest Information Program at the same time. Georgia also requested to move back from 1995 to 1996. Georgia is working toward a State program to improve their hunting and fishing license procedures and would like to include implementation of the Harvest Information Program at the same time.

Service Response: The Service has consistently encouraged States to advance in the implementation schedule, while discouraging any delays. The Service is encouraged by the advances proposed by Maine, Oklahoma, Oregon, and Vermont, and will accommodate these changes in the schedule. The proposed delays by Texas and Georgia are viewed as setbacks to the Program. Both proposals, however, are premised on improved license procedures that will better accommodate the Harvest Information Program. The Service has made it clear that no schedule changes will be made that cause financial disadvantage to other States entering the Program. Therefore, a one-year delay will be granted for these States with the understanding that a portion of their original "start-up" monies will be used to assist those States that are now advancing in the schedule. The long-term ramification of delays in State Program entry are being reviewed with the International Association of Fish and Wildlife Agencies.

4. Limiting the Program Requirements to Licensed Hunters

Comments: Seven States specifically regarded this as a positive change that would aid them in the implementation. Three implied support by their broad agreement to changes. Two States had reservations. Missouri expressed concern that with each exemption the quality of the harvest estimate is reduced. They urged rigorous survey standards for exempt categories of hunters. Maryland strongly encouraged the Service to require that all migratory bird hunters participate in the Program. Their concern is that serious bias may be introduced and that Program credibility may, as a consequence, be in question.

Service Response: In general the Service agrees that under a State licensing (permitting) system, exempt hunters must be enrolled by an alternate survey procedure. The Service acknowledges that the migratory bird harvest from all hunters is desirable and that unlicensed hunter harvest must be addressed. The Service proposes to do this with individual States as they enter the Program. The Program changes that have evolved since its original design have replaced a Federal Permit with a State Permit. This change places many States in the incongruous role of requiring an action that under State law is specifically exempt from a license requirement (*e.g.*, hunters under 16 years of age). This conflict is better addressed with individual States. Some States have the authority to require non-licensed hunters to acquire permits, but many do not. In response to the request for information on unlicensed hunters, only Maine responded. In Maine, only hunters who hunt exclusively on their own land are exempt from licensing. They estimate this to be 0.3 percent of the hunter population (600 individuals) and that their hunting is largely for deer. Migratory bird hunter harvest would be "negligible".

5. Hunters Will Now Acquire Permits for Each State in Which They Hunt

Comments: All State comments were supportive of this change. They varied from "support" to "a significant improvement".

Service Response: Program changes that evolved into issuance of a State permit negated the notion of a Federal permit that would be valid in all States. This change will also simplify questions by restricting them to the species available in the State of hunting and generally will be more cost-effective for the States.

NEPA Consideration

The establishment of this Harvest Information Program and options have been considered in the "Environmental Assessment: Migratory Bird Harvest Information Program." Copies of this document are available from the Service at the address indicated under the caption FOR FURTHER INFORMATION CONTACT.

Regulatory Flexibility Act, Executive Order 12866, and the Paperwork Reduction Act

This rule was not subject to Office of Management and Budget review under Executive Order 12866. This rule will not have a significant effect on a substantial number of small entities

under the Regulatory Flexibility Act, 5 U.S.C. 601 *et seq.*

This rule may eventually affect about 5 million migratory game bird hunters when it is fully implemented. It will require migratory game bird hunters to supply their names, addresses, and other necessary information to the State licensing authority in the State hunted in order that they can be sampled for a voluntary national harvest survey. Hunters will be required to have evidence of current participation in the Program on their person while hunting migratory game birds.

The States may require a small handling fee to compensate their hunting-license vendors and to cover their administrative costs. Many of the State hunting-license vendors are small entities, but this rule should not economically impact those vendors. Only migratory game bird hunters (individuals) would be required to provide this information, so this rule should not adversely affect small entities.

The collection of information contained in this rule has been approved by the Office of Management and Budget under 44 U.S.C. 3501 *et seq.* and assigned clearance number 1018–0015. The information is required from hunters to obtain the benefit of hunting migratory game birds.

The public reporting burden for this collection of information is estimated to average 0.015 hours per response, including the time for reviewing instructions, searching existing data sources, gathering and maintaining the data needed, and completing and reviewing the collection of information. Comments regarding the burden estimate or any other aspect of these reporting requirements should be directed to the Service Information Collection Clearance Officer, MS–224 ARLSQ, Fish and Wildlife Service, Washington, DC 20240, or the Office of Management and Budget, Paperwork Reduction Project 1018–0015, Washington, DC 20503.

Executive Order (EO) 12612—Federalism

This regulation does not have significant federalism effects as provided in EO 12612. Due to the migratory nature of certain species of birds, the Federal Government has been given responsibility over these species by the Migratory Bird Treaty Act of 1918. State harvest surveys presently cannot provide adequate national estimates of migratory game bird harvests for the following reasons: Some States do not now conduct annual harvest surveys or maintain accessible lists of hunter names and addresses. Comparable information is not available from all States because States have different licensing laws regulating who must buy a hunting license and different survey procedures. The harvest of those hunters who can legally hunt without an annual State license is excluded from State estimates. Hunters might buy more than one type of license in a single State and might buy licenses from more than one State, introducing duplication problems. Currently, many State license lists are not available in time to permit distribution of hunter records early in the hunting season. Budget constraints often prevent States from conducting harvest surveys during certain years or could cause some States to eliminate them completely.

This rule does not have a substantial direct effect on fiscal capacity, change the roles or responsibilities of Federal or State Governments, or intrude on State policy or administration. Therefore, this regulation does not have significant federalism effects and do not have sufficient federalism implications to warrant the preparation of a Federalism Assessment. In fact, the Service would cooperate with States in providing surveys to meet special management needs, and increased cooperation between Federal and State Agencies would reduce duplication of survey efforts.

Executive Order 12630—Taking of Individual Property Rights

Executive Order 12630 discussed guidelines for the taking of individual property rights. This rule, authorized by the Migratory Bird Treaty Act, does not affect any constitutionally-protected property rights. This rule will not result in the physical occupancy of property, the physical invasion of property, or the regulatory taking of any property.

Authorship

The primary author of this proposed rule is Robert L. Jessen, working under the direction of Paul R. Schmidt, Chief, Office of Migratory Bird Management.

List of Subjects in 50 CFR Part 20

Exports, Hunting, Imports, Reporting and recordkeeping requirements, Transportation, Wildlife.

For the reasons set out in the preamble, 50 CFR part 20 is amended as set forth below.

PART 20—MIGRATORY BIRD HUNTING

1. The authority citation for part 20 continues to read as follows:

Authority: The Migratory Bird Treaty Act (July 3, 1918), as amended, (16 U.S.C. 703–711); the Fish and Wildlife Improvement Act (November 8, 1978), as amended, (16 U.S.C. 712); and the Fish and Wildlife Act of 1956 (August 8, 1956), as amended, (16 U.S.C. 742 a-d and e-j).

2. Section 20.20 is amended by revising paragraphs (b) and (c) and adding paragraphs (d) and (e) to read as follows:

§ 20.20 Migratory Bird Harvest Information Program.

* * * * *

(b) Each person hunting migratory game birds in California, Maryland, Missouri, and South Dakota shall have identified himself or herself as a migratory bird hunter and given his or her name, address, and date of birth to the respective State hunting licensing authority and shall have on his or her person evidence, provided by that State, of compliance with this requirement.

(c) *Tribal exemptions.* Nothing in paragraph (b) of this section shall apply to tribal members on Federal Indian Reservations or to tribal members hunting on ceded lands.

(d) *State exemptions.* Nothing in paragraph (b) of this section shall apply to those hunters who are exempt from State-licensing requirements in the State in which they are hunting.

(e) *Implementation schedule.* The Service is implementing this Program over a 5-year period, 1994–1998, which will incorporate approximately one-half million additional migratory bird hunters each year. States must participate on or before the following schedule:

1995—Louisiana, Minnesota, Oklahoma, Oregon, Pennsylvania, and Texas

1996—Alabama, Georgia, Illinois, Maine, Michigan, Mississippi, North Carolina, Tennessee, and Vermont

1997—Arizona, Arkansas, Colorado, Florida, Kentucky, South Carolina, Virginia, and Wisconsin

1998—Alaska, Connecticut, Delaware, Idaho, Indiana, Iowa, Kansas, Massachusetts, Montana, Nebraska, Nevada, New Hampshire, New Jersey, New Mexico, New York, North Dakota, Ohio, Rhode Island, Utah, Washington, West Virginia, and Wyoming.

Dated: September 27, 1994.

George T. Frampton, Jr.,

Assistant Secretary for Fish and Wildlife and Parks.

[FR Doc. 94–26044 Filed 10–20–94; 8:45 am]

BILLING CODE 4310–55–P

federal register

Friday
October 21, 1994

Part VII

Department of the Interior

Fish and Wildlife Service

50 CFR Part 32

Addition of Bayou Cocodrie National Wildlife Refuge to the List of Open Areas for Hunting in Louisiana; Proposed Rule

DEPARTMENT OF THE INTERIOR

Fish and Wildlife Service

50 CFR Part 32

RIN 1018–AD00

Addition of Bayou Cocodrie National Wildlife Refuge to the List of Open Areas for Hunting in Louisiana

AGENCY: Fish and Wildlife Service, Interior.

ACTION: Proposed rule.

SUMMARY: The U.S. Fish and Wildlife Service (Service) proposes to add Bayou Cocodrie National Wildlife Refuge to the list of areas open for upland game and big game hunting in Louisiana along with pertinent refuge-specific regulations for such activities. The Service has determined that such use will be compatible with the purposes for which the refuge was established. The Service has further determined that this action is in accordance with the provisions of all applicable laws, is consistent with principles of sound wildlife management, and is otherwise in the public interest by providing additional recreational opportunities of a renewable natural resource.

DATES: Comments may be submitted on or before November 21, 1994.

ADDRESSES: Assistant Director—Refuges and Wildlife, U.S. Fish and Wildlife Service, 1849 C Street, NW, MS 670 ARLSQ, Washington, DC 20240.

FOR FURTHER INFORMATION CONTACT: Duncan L. Brown, Esq., at the address above; Telephone: 703–358–1744.

SUPPLEMENTARY INFORMATION: National wildlife refuges are generally closed to hunting and sport fishing until opened by rulemaking. The Secretary of the Interior (Secretary) may open refuge areas to hunting and/or fishing upon a determination that such uses are compatible with the purpose(s) for which the refuge was established, and that funds are available for development, operation, and maintenance of a hunting or fishing program. The action must also be in accordance with provisions of all laws applicable to the areas, must be consistent with the principles of sound wildlife management, and must otherwise be in the public interest. This rulemaking proposes to open Bayou Cocodrie National Wildlife Refuge to upland game (squirrel, rabbit, raccoon, opossum and coyote) and big game (white-tailed deer) hunting.

Request for Comments

Department of the Interior policy is, whenever practicable, to afford the public a meaningful opportunity to participate in the rulemaking process. A 30-day comment period is specified in order to facilitate public input. Accordingly, interested persons may submit written comments concerning this proposed rule to the person listed above under the heading **ADDRESSES**. All substantive comments will be reviewed and considered.

Statutory Authority

The National Wildlife Refuge System Administration Act of 1966, as amended (NWRSAA) (16 U.S.C. 668dd), and the Refuge Recreation Act of 1962 (RRA) (16 U.S.C. 460k) govern the administration and public use of national wildlife refuges. Specifically, Section 4(d)(1)(A) of the NWRSAA authorizes the Secretary to permit the use of any areas within the National Wildlife Refuge System (Refuge System) for any purpose, including but not limited to hunting, fishing, public recreation and accommodations, and access, when he determines that such uses are compatible with the purposes for which each refuge was established. The Service administers the Refuge System on behalf of the Secretary. The RRA gives the Secretary additional authority to administer refuge areas within the Refuge System for public recreation as an appropriate incidental or secondary use only to the extent that it is practicable and not inconsistent with the primary purposes for which the refuges were established. In addition, prior to opening refuges to hunting or fishing under this Act, the Secretary is required to determine that funds are available for the development, operation, and maintenance of the permitted forms of recreation.

Opening Package

In preparation for this opening, the refuge unit has included in its "openings package" for Regional review and approval from the Washington Office the following documents: a hunting/fishing plan; an environmental assessment; a Finding of No Significant Impact (FONSI); a Section 7 evaluation or statement, pursuant to the Endangered Species Act, that these openings are not likely to adversely affect a listed species or critical habitat; a letter of concurrence from the affected States; and refuge-specific regulations to administer the hunts. From a review of the totality of these documents, the Secretary has determined that the opening of the Bayou Cocodrie National Wildlife Refuge to upland game and big game hunting is compatible with the principles of sound wildlife management and will otherwise be in the public interest.

In accordance with the NWRSAA and the RRA, the Secretary has also determined that this opening for upland game and big game hunting is compatible and consistent with the primary purposes for which the refuge was established, and that funds are available to administer the programs. A brief description of the hunting program is as follows:

Bayou Cocodrie National Wildlife Refuge

Public Law 101–593, enacted by Congress on November 16, 1990, authorized the establishment of Bayou Cocodrie National Wildlife Refuge (NWR). The refuge is located in Concordia Parish in east central Louisiana. It was established to protect some of the last remaining, least disturbed bottomland hardwoods in the Mississippi River Delta. These forested wetlands represent one of the most valuable and productive wildlife habitats in the southeastern United States. The stated purposes found at 104 Stat. 2957 provide that the refuge purposes are (1) the conservation and enhancement of wetlands; (2) the general wildlife management as a unit of the National Wildlife Refuge System, including management for migratory birds; and (3) for fish and wildlife-oriented recreational activities.

Total refuge acreage is proposed at 17,269 acres, including an 11,230-acre core tract formerly owned by The Nature Conservancy. The remaining 6,039 acres are adjacent, privately-owned tracts. Acquisition to date totals 9,805 acres of the core tract. The area offers attractive shallow-water feeding habitat for pintails and other dabbling ducks such as mallards and blue-winged teal, and provides excellent habitat for resident game, including white-tailed deer, turkeys, woodcock, and grey and fox squirrels. The bottomland hardwoods also serve as both permanent homes and migration habitat for many species of passerine birds, including songbirds and neotropical migrants.

The area has historically been noted for its excellent hunting opportunities for white-tailed deer and small game such as rabbits and squirrels. Nearly all of the refuge area was leased by hunting clubs or commercial hunting enterprises prior to the government obtaining the property. Based on preliminary assessment of the refuge and the experience of the local Louisiana Department of Wildlife and Fisheries biologist and enforcement personnel, all indications support the fact that relevant wildlife populations are

sufficient for hunting and for other refuge objectives.

Because of the unpredictable refuge development timeframe, the location of future land purchases, and the limited amount of developed waterfowl habitat, the initial hunting program will involve only resident game including white-tailed deer, squirrels, and rabbits. A waterfowl hunting program is totally dependent on the capability of being able to have dependable water sources to maintain optimum water levels for waterfowl hunting. Seasons and bag limits for resident game seasons hunting will be within the guidelines established by the Louisiana Department of Wildlife and Fisheries, but will likely be more conservative. The hunting program will be reviewed on an annual basis and revisions will be made accordingly.

The sport hunting program will be monitored by refuge personnel. Currently, the refuge is operating at the "custodial level" with only one staff member—the refuge manager. Resources from other refuges (Tensas River, Catahoula, and Lake Ophelia) will be utilized to help administer the hunt programs.

To facilitate the distribution of news releases, the refuge will maintain a mailing list for newspapers, local radio and television stations. News releases will be developed announcing the hunting season dates, where regulations can be obtained, and other pertinent information.

Opening the refuge to upland game and big game hunting has been found to be compatible in a separate compatibility determination. This determination noted that time and zone restrictions would be implemented as land acquisition progressed to ensure continued compatibility. A Section 7 evaluation pursuant to the Endangered Species Act was conducted and it was determined that the proposed action is not likely to adversely affect any Federally listed or proposed for listing threatened or endangered species or their critical habitats. Pursuant to the National Environmental Policy Act (NEPA), an environmental assessment was made and a Finding of No Significant Impact (FONSI) was made regarding the hunt. Numerous contacts were made throughout the area of the refuge soliciting comments on the proposed hunting plan. The Louisiana Department of Wildlife and Fisheries concurs and fully supports the regulated recreational hunting program proposed at the refuge.

The Service has determined that there would be sufficient funds to administer the proposed hunt pursuant to the requirements of the Refuge Recreation Act. The cost of the proposed hunt program is estimated to be approximately $25,000 for the initial year and $10,000 per year thereafter. Sufficient funds would be available within the refuge unit budget to operate such a hunt as proposed. It is estimated, further, that 10,000 hunter visits per year would take place.

Paperwork Reduction Act

The information collection requirements for part 32 are found in 50 CFR part 25 and have been approved by the Office of Management and Budget under 44 U.S.C. 3501 et seq. and assigned clearance number 1018–0014. The information is being collected to assist the Service in administering these programs in accordance with statutory authorities which require that recreational uses be compatible with the primary purposes for which the areas were established. The information requested in the application form is required to obtain a benefit.

The public reporting burden for the application form is estimated to average six (6) minutes per response, including time for reviewing instructions, gathering and maintaining data, and completing the form. Direct comments on the burden estimate or any other aspect of this form to the Service Information Collection Officer, U.S. Fish and Wildlife Service, 1849 C Street NW, MS 224 ARLSQ, Washington, DC 20240; and the Office of Management and Budget, Paperwork Reduction Project (1018–0014), Washington, DC 20503.

Economic Effect

This rulemaking was not subject to Office of Management and Budget review under Executive Order 12866. In addition, a review under the Regulatory Flexibility Act of 1980 (5 U.S.C. 601 et seq.) has revealed that the rulemaking would not have a significant effect on a substantial number of small entities, which include businesses, organizations or governmental jurisdictions. This proposed rule would have minimal effect on such entities.

Federalism

This proposed rule will not have substantial direct effects on the States, on the relationship between the national government and the States, or on the distribution of power and responsibilities among the various levels of government. Therefore, in accordance with Executive Order 12612, it is determined that this rule does not have sufficient Federalism implications to warrant the preparation of a Federalism Assessment.

Environmental Considerations

Pursuant to the requirements of section 102(2)(C) of the National Environmental Policy Act of 1969 (42 U.S.C. 4332(2)(C)), an environmental assessment has been prepared for this opening. Based upon the Environmental Assessments, the Service issued a Finding of No Significant Impact with respect to the opening. A Section 7 evaluation was prepared pursuant to the Endangered Species Act with a finding that no adverse impact would occur to any identified threatened or endangered species.

Primary Author

Duncan L. Brown, Esq., Division of Refuges, U.S. Fish and Wildlife Service, Washington, DC, is the primary author of this rulemaking document.

List of Subjects in 50 CFR Part 32

Hunting, Fishing, Reporting and recordkeeping requirements, Wildlife, Wildlife refuges.

Accordingly, part 32 of chapter I of Title 50 of the *Code of Federal Regulations* is proposed to be amended as set forth below:

PART 32—[AMENDED]

1. The authority citation for part 32 continues to read as follows:

Authority: 5 U.S.C. 301; 16 U.S.C. 460k, 664, 668dd, and 715i.

2. Section 32.7 *List of refuge units open to hunting and/or fishing* is amended by adding the alphabetical listing of "Bayou Cocodrie National Wildlife Refuge" under the state of Louisiana.

3. Section 32.37 *Louisiana* is amended by adding the alphabetical listing of Bayou Cocodrie National Wildlife Refuge to read as follows:

§ 32.37 Louisiana.

* * * * *

Bayou Cocodrie National Wildlife Refuge

A. Hunting of Migratory Game Birds. [Reserved.]

B. Upland Game Hunting. Hunting of squirrel, rabbit, raccoon, opossum and coyote is permitted on designated areas of the refuge subject to the following condition: Permits are required.

C. Big Game Hunting. Hunting of white-tailed deer is permitted on designated areas of the refuge subject to the following condition: Permits are required.

D. Sport Fishing. [Reserved.]

* * * * *

Dated: September 9, 1994.

George T. Frampton, Jr.,

Assistant Secretary for Fish and Wildlife and Parks.

[FR Doc. 94–26146 Filed 10–20–94; 8:45 am]

BILLING CODE 4310–55–P

federal register

Friday
October 21, 1994

Part VIII

Department of Justice

Bureau of Prisons

28 CFR Parts 545 and 550
Drug Abuse Treatment Programs; Final and Interim Rules

DEPARTMENT OF JUSTICE

Bureau of Prisons

28 CFR Parts 545, and 550

[BOP-1010-F]

RIN 1120-AA16

Drug Abuse Treatment Programs

AGENCY: Bureau of Prisons, Justice.

ACTION: Final and interim rules.

SUMMARY: In this document, the Bureau of Prisons is amending its rule on Chemical Abuse Programs by renaming it as Drug Abuse Treatment Programs, by expanding programming available to inmates, and by requiring participation from certain inmates. An inmate who has been recommended for drug programming during incarceration by the sentencing judge, or whose presentence investigation contains evidence that alcohol or other drug use contributed to the commission of the instant offense, or for whom alcohol or drug abuse was a reason for violation of either supervised release, parole or community corrections center placement will be required to participate in a drug abuse education course. Further program opportunities are presented through voluntary participation in residential and non-residential drug abuse treatment programs and through transitional services. This amendment also makes conforming changes with respect to inmate financial responsibility requirements. Provisions on eligibility criteria for residential and non-residential drug treatment programs are being adopted on an interim basis. This amendment is intended to fulfill statutory requirements to make available to inmates appropriate substance abuse treatment.

DATES: Effective November 21, 1994; comments on interim provisions in §§ 550.55(a) and 550.57(a) are due December 20, 1994.

ADDRESSES: Office of General Counsel, Bureau of Prisons, HOLC Room 754, 320 First Street, NW., Washington, DC 20534.

FOR FURTHER INFORMATION CONTACT: Roy Nanovic, Office of General Counsel, Bureau of Prisons, phone (202) 514-6655.

SUPPLEMENTARY INFORMATION: The Bureau of Prisons is amending its regulations on Chemical Abuse Programs. A proposed rule on this subject was published in the **Federal Register** on January 7, 1994 (59 FR 1240 *et seq.*). This proposed rule renamed such programming as Drug Abuse Treatment Programs and distinguished between mandatory and voluntary requirements for inmate participation. The comment period closed on March 8, 1994. The Bureau received comment from only one respondent. A summary of comment and agency response follows.

The commenter stated that the statutory provision mandating the Bureau of Prisons to provide substance abuse treatment programs is directly opposed to mandating participation in treatment programs when imposing the original sentence. The commenter cited 18 U.S.C. 3582(a) and 28 U.S.C. 994(k) as being "inappropriately immiscible" to the provisions proposed in 28 CFR 550.52(a) (1) and (3). In response, the Bureau notes that there is no statutory conflict. The provisions in 18 U.S.C. 3582(a) and 28 U.S.C. 994(k) relate to imposition of sentence by the court under the guidelines of the United States Sentencing Commission. These are intended to ensure that the various aspects relating to the offense are considered in determining the relevance of imprisonment, and if relevant, the length of such imprisonment. It is only after a term of imprisonment is imposed that 18 U.S.C. 3621 becomes applicable. The Bureau's authority under 18 U.S.C. 3621(b) to make available appropriate substance abuse treatment for each inmate committed to its custody has been implemented separately through this very rulemaking. Use by the Bureau of the sentencing court's recommendation or of information in the Presentence Investigation has no direct impact on the prior decision taken by the sentencing court.

The commenter also questioned the operation of the program at a specific Bureau institution, stating that the proposals were being implemented with severe sanctions for an inmate who does not participate voluntarily. The administrative remedy procedure is the appropriate means for inmates to voice their concerns on such aspects of their imprisonment. A review of inmate remedy requests for calendar year 1993 at the cited institution indicates only one request filed under the subject matter of substance abuse programs. The "severe sanctions" apparently refer to pay and community status restrictions (i.e., being held to the lowest pay grade and loss of eligibility for furlough consideration or community corrections center placement) imposed on an inmate who had declined to complete drug abuse education requirements. That complaint ultimately was mooted upon the inmate's completion of the forty hour course.

In issuing the final rule, the Bureau has further reorganized the regulations for the sake of clarity. Additional provisions have been added which are either administrative in nature or are intended to allow for increased voluntary participation in drug abuse treatment programming. Specific provisions as to eligibility criteria codified in new §§ 550.55(a) and 550.57(a) are being adopted on an interim basis with the opportunity for further comment. A discussion of this further reorganization and additions follows.

The statement of purpose and scope § 550.50 is adopted as final without change. The provisions in proposed § 550.51 have been reorganized and revised as new §§ 550.51 through 550.53. As revised, new § 550.51 defines the role of the Drug Abuse Treatment Coordinator and the Drug Abuse Treatment Specialist. Provisions of proposed § 550.51 which covered requirements on the Admission and Orientation program and screening and referral are now separately stated in new §§ 550.52 and 550.53. New § 550.52 contains the provisions pertinent to the Admission and Orientation program. These provisions have been reworded, but there is no change in the intent. New § 550.53 contains the provisions pertinent to screening and referral. As revised, this section now also provides for a record review by the case manager.

The provisions in proposed § 550.52 on the drug abuse education course have been revised as new § 550.54. This section has been reorganized and revised for the sake of clarity. As revised, paragraph (a)(2) of this section now also specifies that, with respect to voluntary participants, the Bureau gives priority consideration to those inmates whose participation has been recommended by unit or treatment staff. This change is necessary to help ensure the efficient program allocation of Bureau resources. Paragraph (b) of the revised section now allows for inmates to receive work assignment promotions during their participation in or while on a "waiting list" for the drug abuse education course.

The provisions in proposed § 550.53 on institution residential and nonresidential programs have been revised and separately stated in new §§ 550.55 through 550.57. New § 550.55 covers the voluntary institution residential drug abuse treatment program. As revised, this section no longer restricts application to those inmates who have been recommended by unit and/or drug treatment staff. As a consequence of this expansion of programming opportunity, paragraph (a)

of new § 550.55 now contains eligibility criteria for program participation. The eligibility criteria is intended to allow the Bureau to allocate its resources in an efficient manner. The Bureau is adopting this provision on an interim basis, and will accept comments for the purpose of reissuance as a final regulation. New § 550.56 contains the provisions in proposed § 550.53(c) on the use of incentives. New § 550.57 covers the voluntary non-residential drug treatment program. As revised, programming opportunities appropriate for the drug abuse treatment needs of inmates who have more than thirty-six months left to serve have been expanded and consequent eligibility criteria in § 550.57(a) have been adopted on an interim basis.

The provisions for transitional services in proposed § 550.54 have been adopted as final without change in new § 550.58.

Conforming changes to the Bureau's provisions on inmate financial responsibility (28 CFR 545.11) have been adopted as final without change. Other proposed conforming changes to the provisions on institution work and performance pay (28 CFR 545.23) will be addressed in a separate final rule document.

Interested persons may participate in this rulemaking by submitting data, views, or arguments in writing to the Bureau of Prisons, 320 First Street, NW., HOLC Room 754, Washington, DC 20534. Comments received on the interim rule provisions during the comment period will be considered before final action is taken. Comments received on the final rule provisions will be considered but will receive no formal response in the **Federal Register**. All comments received remain on file for public inspection at the above address.

The Bureau of Prisons has determined that this rule is not a significant regulatory action for the purpose of E.O. 12866, and accordingly this rule was not reviewed by the Office of Management and Budget. After review of the law and regulations, the Director, Bureau of Prisons has certified that this rule, for the purpose of the Regulatory Flexibility Act (Pub. L. 96–354), does not have a significant impact on a substantial number of small entities.

List of Subjects in 28 CFR Parts 545 and 550

Prisoners.

Kathleen M. Hawk,

Director, Bureau of Prisons.

Accordingly, pursuant to the rulemaking authority vested in the Attorney General in 5 U.S.C. 552(a) and delegated to the Director, Bureau of Prisons in 28 CFR 0.96(p), parts 545 and 550 in subchapter C of 28 CFR, chapter V are amended as set forth below.

SUBCHAPTER C—INSTITUTIONAL MANAGEMENT

PART 550—DRUG PROGRAMS

1. The authority citation for 28 CFR part 550 is added to read as follows, and all other authority citations within the part are removed:

Authority: 5 U.S.C. 301; 18 U.S.C. 3621, 3622, 3624, 4001, 4042, 4081, 4082 (Repealed in part as to offenses committed on or after November 1, 1987), 4251–4255, 5006–5024 (repealed October 12, 1984 as to conduct occurring after that date), 5039; 28 U.S.C. 509, 510; 28 CFR 0.95–0.99.

2. Subpart F, consisting of §§ 550.50 and 550.51, is revised to consist of §§ 550.50 through 550.58 as follows:

Subpart F—Drug Abuse Treatment Programs

Sec.
550.50 Purpose and scope.
550.51 Institution organization/staff roles and responsibilities.
550.52 Admission and Orientation program.
550.53 Screening and referral.
550.54 Requirements for drug abuse education course.
550.55 Institution residential drug abuse treatment program.
550.56 Incentives for residential drug abuse treatment program participation.
550.57 Non-residential drug abuse treatment program.
550.58 Transitional services.

Subpart F—Drug Abuse Treatment Programs

§ 550.50 Purpose and scope.

The Bureau of Prisons provides, to the extent practicable, appropriate drug abuse treatment programs to inmates.

§ 550.51 Institutional organization/staff roles and responsibilities.

(a) *Drug Abuse Treatment Coordinator.* The Warden shall designate a drug abuse treatment coordinator for his/her institution.

(b) *Drug Abuse Treatment Specialist.* All institutions shall employ a drug abuse treatment specialist. The drug abuse treatment specialist is responsible for providing drug abuse education and non-residential drug abuse treatment services to the inmate population, under the supervision of the drug abuse treatment coordinator. In institutions with residential drug abuse treatment programs, additional drug abuse treatment specialist staff are employed to provide treatment services on the residential drug abuse treatment unit.

§ 550.52 Admission and Orientation program.

Drug abuse treatment coordinators at all institutions shall ensure that inmates are informed about local and Bureau-wide drug abuse programming and treatment opportunities during the Admission and Orientation program.

§ 550.53 Screening and referral.

A psychologist or drug abuse treatment specialist shall interview all new institution admissions for drug abuse problems. A record review will be performed by a case manager in the normal course of his/her duties. Based on these reviews and interviews, drug abuse treatment staff shall make an appropriate drug education/treatment referral.

§ 550.54 Requirements for drug abuse education course.

(a)(1) *Mandatory participation.* An inmate is required to participate in the drug abuse education course if he/she has been sentenced or returned to custody as a violator after September 30, 1991 and it is determined by unit and/or drug abuse treatment staff through a combination of interview and file review that:

(i) There is evidence in the Presentence Investigation that alcohol or other drug use contributed to the commission of the instant offense;

(ii) Alcohol or other drug use was a reason for violation either of supervised release, including parole, or BOP community status (CCC placement) for which the inmate is now incarcerated; or

(iii) The inmate was recommended for drug programming during incarceration by the sentencing judge.

(2) *Voluntary participation.* Inmates who are not required by paragraph (a)(1) of this section to participate in the drug abuse education course may request to participate voluntarily in the drug abuse education course when participant space is available. Volunteers must have the approval of the drug abuse treatment coordinator. Priority consideration shall be given to those inmates whose participation has been recommended by unit or treatment staff.

(b) *Sanctions.* An inmate who is required by paragraph (a)(1) of this section to participate in the drug abuse education course and who refuses participation, withdraws, is expelled, or otherwise fails to meet the attendance and examination requirements shall be held at the lowest pay grade (Grade 4) within the institution and shall be ineligible for community programs. Inmates may be permitted to receive work promotions during their

participation or while on a "waiting list" for the drug abuse education course. The Warden may make exceptions to the provisions of this paragraph for good cause with reasons for such exceptions documented in writing.

(c) *Exemptions.* An inmate may be exempted from the required drug abuse education course due to cognitive impairment or other learning disabilities only after evaluation and recommendation by a psychologist. An inmate may also be exempted from the drug abuse education course if that inmate volunteers for, enters and completes a residential drug abuse treatment program or if he/she completes a structured drug abuse treatment program at one of the Bureau of Prisons' Intensive Confinement Centers (ICC).

(d) *Written consent.* All inmates who enter the drug abuse education course (whether as mandatory or as voluntary participants) are required to sign an agreement to participate prior to admission to the course.

(e) *Completion.* Completion of the drug abuse education course requires attendance and participation during course sessions and a passing grade on an examination given at the end of the course. Inmates required to participate in this course ordinarily are provided at least three chances to pass the final examination before privileges are lost or sanctions (see paragraph (b) of this section) are invoked. A certificate of achievement will be awarded to all who successfully complete the program. A copy of this certificate will be forwarded to the unit team for placement in the inmate's central file.

§ 550.55 Institution residential drug abuse treatment program.

Residential drug abuse treatment is available at selected Bureau of Prisons institutions. It is an intensive, unit-based treatment experience provided by a team of drug abuse treatment specialists and the drug abuse treatment coordinator.

(a) *Eligibility.* The following criteria must be met for an inmate to be recommended and/or approved for the residential drug abuse treatment program.

(1) The inmate must have a documented drug abuse problem.

(2) The inmate must have no serious mental impairment which would substantially interfere with or preclude full participation in the program.

(3) The inmate must sign an agreement acknowledging his/her program responsibility.

(4) Ordinarily, the inmate must be within thirty-six months of release.

(5) The security level of the residential program institution must be appropriate for the inmate.

(b) *Application/Referral/Placement.* Participation in the residential drug abuse treatment program is voluntary. An inmate may be referred for treatment by unit and/or drug treatment staff or apply for the program by submitting a request to a staff member (ordinarily, a member of the inmate's unit team or the drug abuse treatment coordinator). The decision on placement is made by the drug abuse treatment coordinator.

(c) *Withdrawal/expulsion.* An inmate may withdraw voluntarily from the program. The drug abuse treatment coordinator may remove an inmate from the program based upon disruptive or negative behavior. Withdrawal or removal from the residential program may result in the inmate's being returned to his/her prior institution (when the inmate had been specifically transferred for the purpose of program participation) and/or return of tangible incentives previously achieved.

§ 550.56 Incentives for residential drug abuse treatment program participation.

(a) An inmate may receive incentives for his or her satisfactory involvement in the residential program. These incentives may include, but are not limited to, the following.

(1) Limited financial awards, based upon the inmate's achievement/completion of program phases.

(2) Consideration for the maximum period of time (currently 180 days) in a Community Corrections Center placement, provided the inmate is otherwise eligible for this designation.

(3) Local institution incentives such as preferred living quarters or special recognition privileges.

(b) An inmate must meet his/her financial program responsibility obligations (see 28 CFR part 545) prior to being able to receive an incentive for his/her residential program participation.

§ 550.57 Non-residential drug abuse treatment program.

Non-residential drug abuse treatment is provided at all institutions and ordinarily consists of individual and/or group counseling and self-help programming provided through the institution's Psychology Services department.

(a) *Eligibility.* The following criteria must be met for an inmate to be recommended or approved for a non-residential drug abuse treatment program.

(1) The inmate must have a documented drug abuse problem.

(2) The inmate must have no serious mental impairment which would substantially interfere with or preclude full participation in the program.

(3) The inmate must sign an agreement acknowledging his/her program responsibility.

(b) *Application/Referral/Placement.* Participation in the non-residential drug abuse treatment program is voluntary. An inmate may be referred for treatment by unit and/or drug treatment staff or may apply for these programs by submitting a request to a staff member (ordinarily, a member of the inmate's unit team or the drug abuse treatment coordinator). The decision on placement is made by the drug abuse treatment coordinator.

(c) *Withdrawal/expulsion.* An inmate may withdraw voluntarily from the program. The drug abuse treatment coordinator may remove an inmate from the program based upon disruptive or negative behavior.

§ 550.58 Transitional services.

(a) Transitional treatment programming is required for all inmates completing an institution's residential treatment program. Transitional treatment includes treatment provided to inmates who, upon completing the residential program, return to the general population of that or another institution. An inmate's refusal to participate in this program is considered a program failure and disqualifies the inmate for any additional incentives consideration, and may result in the inmate's redesignation.

(b) An inmate who successfully completes a residential drug abuse program and who, based on eligibility, is transferred to a Community Corrections Center (CCC), is required to participate in a community-based treatment program each week, in addition to the required employment and other program activities of the CCC. The inmate's failure to meet the requirements of treatment may result in the inmate's being returned to the institution for refusing a program assignment.

(c) Staff may offer an inmate who has not been involved in the institution's drug abuse treatment program the opportunity to become involved in the transitional drug treatment program as part of the inmate's CCC placement. In addition, with the drug abuse treatment coordinator's approval, an inmate may volunteer and be accepted for transitional drug treatment programming.

3. The authority citation for 28 CFR part 545 continues to read as follows:

Authority: 5 U.S.C. 301; 18 U.S.C. 3013, 3571, 3572, 3621, 3622, 3624, 3663, 4001, 4042, 4081, 4082 (Repealed in part as to offenses committed on or after November 1, 1987), 4126, 5006–5024 (Repealed October 12, 1984 as to offenses committed after that date), 5039; 28 U.S.C. 509, 510; 28 CFR 0.95–0.99.

4. In § 545.11, a new paragraph (d)(11) is added to read as follows:

§ 545.11 Procedures.

* * * * *

(d) * * *

(11) The inmate will not receive an incentive for participation in residential drug treatment programs.

[FR Doc. 94–26111 Filed 10–20–94; 8:45 am]

BILLING CODE 4410–05–P

Reader Aids

Federal Register

Vol. 59, No. 203

Friday, October 21, 1994

INFORMATION AND ASSISTANCE

Federal Register

Index, finding aids & general information	202–523–5227
Public inspection announcement line	523–5215
Corrections to published documents	523–5237
Document drafting information	523–3187
Machine readable documents	523–3447

Code of Federal Regulations

Index, finding aids & general information	523–5227
Printing schedules	523–3419

Laws

Public Laws Update Service (numbers, dates, etc.)	523–6641
Additional information	523–5230

Presidential Documents

Executive orders and proclamations	523–5230
Public Papers of the Presidents	523–5230
Weekly Compilation of Presidential Documents	523–5230

The United States Government Manual

General information	523–5230

Other Services

Data base and machine readable specifications	523–3447
Guide to Record Retention Requirements	523–3187
Legal staff	523–4534
Privacy Act Compilation	523–3187
Public Laws Update Service (PLUS)	523–6641
TDD for the hearing impaired	523–5229

ELECTRONIC BULLETIN BOARD

Free **Electronic Bulletin Board** service for Public Law numbers, Federal Register finding aids, and list of documents on public inspection. 202–275–0920

FAX-ON-DEMAND

The daily Federal Register Table of Contents and the list of documents on public inspection are available on the National Archives fax-on-demand system. You must call from a fax machine. There is no charge for the service except for long distance telephone charges. 301–713–6905

FEDERAL REGISTER PAGES AND DATES, OCTOBER

50153–50480	3	51839–52070	13
50481–50678	4	52071–52232	14
50679–50812	5	52233–52398	17
50813–51080	6	52399–52654	18
51081–51350	7	52655–52890	19
51351–51482	11	52891–53032	20
51483–51838	12	53033–53346	21

CFR PARTS AFFECTED DURING OCTOBER

At the end of each month, the Office of the Federal Register publishes separately a List of CFR Sections Affected (LSA), which lists parts and sections affected by documents published since the revision date of each title.

3 CFR

Proclamations:
6728 50679
6729 50681
6730 50683
6731 51081
6732 51351
6733 51489
6734 52061
6735 52063
6736 52065
6737 52067
6738 52069
6739 52231
6740 52399
6741 53033
6742 53035
6743 53037
6744 53039
6745 53041

Executive Orders:
July 2, 1910 (Revoked in part by PLO 7092) 50508
12352 (Revoked by EO 12931) 52387
12775 (Continued by Notice of September 30, 1994) 50479
12775 (See DOT final rule of Oct. 6) 51066
12775 (Revoked by EO 12932) 52403
12779 (See DOT final rule of Oct. 6) 51066
12779 (Revoked by EO 12932) 52403
12784 (See EO 12929) 50473
12853 (See DOT final rule of Oct. 6) 51066
12853 (Revoked by EO 12932) 52403
12868 (Revoked by EO 12930) 50475
12872 (See DOT final rule of Oct. 6) 51066
12872 (Revoked by EO 12932) 52403
12914 (See DOT final rule of Oct. 6) 51066
12914 (Revoked by EO 12932) 52403
12917 (See DOT final rule of Oct. 6) 51066
12917 (Revoked by EO 12932) 52403
12920 (See DOT final rule of Oct. 6) 51066
12920 (Revoked by EO 12932) 52403
12922 (See DOT final rule of Oct. 6) 51066
12922 (Revoked by EO 12932) 52403
12953 (See DOT final rule of Oct. 6) 51066
12929 50473
12930 50475
12931 52387
12932 52403

Administrative Orders:
Presidential Determinations:
No. 94–52 of September 29, 1994 50477
No. 94–53 of September 30, 1994 51483
No. 94–54 of September 30, 1994 51485
No. 94–55 of September 30, 1994 51487
No. 94–56 of September 30, 1994 52389
No. 94–57 of September 30, 1994 52057
No. 94–58 of September 30, 1994 52391
No. 94–59 of September 30, 1994 52059
No. 95–1 of October 1, 1994 52393
Memorandums:
September 27, 1994 50685
September 30, 1994 50809
October 7, 1994 52395
October 13, 1994 52397
Notices:
September 30, 1994 50479

5 CFR

213 50813
316 46895
532 52405
846 50687
890 51353
1320 50813
1633 50816
Ch. LXXVI 50816

Proposed Rules:
214 52459
315 52925
317 52459
319 52459
359 52459
531 52467

534 ... 52459
843 ... 50705
2604 ... 50171

7 CFR

Ch. I ... 51083
Ch. IX ... 51083
Ch. X ... 51083
Ch. XI ... 51083
52 ... 52624, 52630
55 ... 52636
56 ... 52636
59 ... 52636
70 ... 52636
210 ... 51083, 52588
246 ... 50818
271 ... 51353
272 ... 50153
273 ... 50173
301 ... 51839, 52405, 52891
400 ... 52407
735 ... 51355
736 ... 51355
737 ... 51355
738 ... 51355
739 ... 51355
740 ... 51355
741 ... 51355
742 ... 51355
800 ... 52071, 52655
906 ... 50824
928 ... 52409
945 ... 50793, 52411
966 ... 51087
967 ... 52411
981 ... 52413
987 ... 52411
993 ... 52411
1493 ... 52866
1755 ... 53043
1951 ... 53079

Proposed Rules:

1 ... 51389
70 ... 52469
273 ... 52928
782 ... 52931
1220 ... 52475

8 CFR

103 ... 51091
204 ... 51358
212 ... 51091
214 ... 51101
217 ... 51091
245 ... 51091, 53020
274a ... 52894

9 CFR

51 ... 51102, 52233
78 ... 51102
92 ... 52235, 52237
94 ... 52237
75 ... 50860
102 ... 50861
113 ... 51390

10 CFR

34 ... 50688
35 ... 50688
50 ... 50688
73 ... 50688
110 ... 50688
600 ... 53260

Proposed Rules:

2 ... 50706
50 ... 50513, 52255, 52707
52 ... 52255
61 ... 52941
100 ... 52255
150 ... 50706
430 ... 50706, 51140

11 CFR

Proposed Rules:

110 ... 50708
9003 ... 51006
9004 ... 51006
9006 ... 51006
9007 ... 51006
9033 ... 51006
9034 ... 51006
9037 ... 51006
9038 ... 51006

12 CFR

230 ... 52657
303 ... 52658
304 ... 50826
338 ... 52658
614 ... 50964
701 ... 52862
1403 ... 53083
1609 ... 52669

Proposed Rules:

3 ... 52100
25 ... 51232
203 ... 51323
208 ... 52100
225 ... 52100
228 ... 51232
325 ... 52714
327 ... 50710
345 ... 51232
563e ... 51232

13 CFR

121 ... 50964

14 CFR

11 ... 52683
25 ... 52683
27 ... 50380
29 ... 50380
39 ... 50481, 51103, 51361, 51840, 51841, 51842, 51846, 52414
67 ... 52894
71 ... 51362, 51491, 51851, 51852, 52241, 52242, 52894, 52895
93 ... 51363
97 ... 52243, 52244, 52246, 52417, 52418, 52419
101 ... 50390
121 ... 52640, 52683, 53085
125 ... 52640, 52683
135 ... 52640, 52683

Proposed Rules:

Ch. I ... 50864
11 ... 50676
39 ... 51151, 51392, 51875, 51877, 51879, 52273, 52479, 52481, 52482, 52483, 52485, 52720
61 ... 53226
67 ... 53226
71 ... 50865, 51394, 51395
380 ... 51881
381 ... 51881
399 ... 51881

15 CFR

770 ... 50156
771 ... 50156
773 ... 52685
775 ... 50156
778 ... 52685
799 ... 52685
925 ... 51105

17 CFR

200 ... 52689
229 ... 52689
239 ... 52689
240 ... 52689
270 ... 52689
274 ... 52689

Proposed Rules:

240 ... 50866, 52723

18 CFR

161 ... 52896
250 ... 52896

19 CFR

19 ... 51492
101 ... 50689
111 ... 53086
112 ... 51492
113 ... 51492
118 ... 51492
125 ... 51492
146 ... 51492
178 ... 51492

Proposed Rules:

101 ... 50717
122 ... 50717

20 CFR

Proposed Rules:

404 ... 52380
416 ... 52380

21 CFR

11 ... 50793
101 ... 50828
314 ... 50338
450 ... 50484
452 ... 52077
510 ... 50828
520 ... 50829
556 ... 50829
558 ... 51497
812 ... 52078
1308 ... 52905
1310 ... 51364, 51365, 52588
1313 ... 51365, 52588

Proposed Rules:

101 ... 51030, 52275
170 ... 51030
310 ... 51030
1307 ... 51887
1309 ... 51887
1310 ... 51887
1313 ... 51887
1316 ... 51887

22 CFR

40 ... 51367

24 CFR

200 ... 50456
203 ... 50456, 52905
204 ... 50456
206 ... 50456
267 ... 50456
291 ... 52905
791 ... 50158
905 ... 51852
990 ... 51852

Proposed Rules:

Ch. I ... 52104
200 ... 51519
760 ... 51519
813 ... 50870
905 ... 50870
908 ... 50870
913 ... 50870

25 CFR

Proposed Rules:

309 ... 51908, 52588

26 CFR

1 ... 50159, 50161, 50485, 51105, 51369
301 ... 53087
602 ... 50161, 51369

Proposed Rules:

1 ... 52105, 52110
40 ... 52735
48 ... 52735

28 CFR

82 ... 50830
545 ... 53342
550 ... 53342

Proposed Rules:

542 ... 50179

29 CFR

1601 ... 52704
1910 ... 51672
1928 ... 51672
1952 ... 50793
2610 ... 52079
2619 ... 52081
2622 ... 52079
2644 ... 52083
2676 ... 52081

Proposed Rules:

1609 ... 51396

30 CFR

250 ... 53091
256 ... 53091
280 ... 53091
281 ... 53091
701 ... 53022
780 ... 53022
784 ... 53022
816 ... 53022
817 ... 53022
880 ... 52374
914 ... 52906
935 ... 51498
950 ... 53094

Proposed Rules:

913 ... 52487
914 ... 52941, 52943
916 ... 51911
935 ... 53122
944 ... 53123

31 CFR

103 ... 52250
205 ... 51855
550 ... 51106

Proposed Rules:

103 ... 52275
247 ... 53125
334 ... 50874

32 CFR

706 ... 52909, 52910, 53097

806 50834
806b 53098
Proposed Rules:
323 51911

33 CFR

100 ..... 51500, 51503
117 ..... 50166, 52423
151 51332
155 53286
156 53286
165 ..... 50489, 50490, 50491, 50492, 52424
Proposed Rules:
Ch. I 52646
117 ..... 50528, 50529, 50530, 50531
165 52945
166 50533
167 50533

34 CFR

396 52218
685 52704
Proposed Rules:
682 ..... 51346, 52038

35 CFR

135 52862

36 CFR

242 51855
Proposed Rules:
800 50395

37 CFR

Proposed Rules:
1 50181

39 CFR

111 50690
962 51860
Proposed Rules:
111 51397

40 CFR

15 50691
32 50691
51 50693
52 ..... 50493, 50495, 50498, 50500, 50502, 50504, 50844, 51108, 51376, 51379, 51381, 51382, 51506, 51514, 51517, 51860, 51863, 52425, 52427, 52429, 52431, 52588, 52704, 52911, 52915, 52916
55 50845
60 51383
62 50506
63 53109
81 ..... 50848, 52431
86 51114
227 52650
261 52862
272 ..... 52084, 52918
271 ..... 51115, 51116, 51122
355 51821
Proposed Rules:
51 50718
52 ..... 50211, 50533, 50536, 50884, 51153, 51397, 51521, 51912, 52495, 52496, 52743, 52946, 52947, 53128
62 50536
63 51913
70 ..... 50214, 50537, 52122, 52123, 52743
81 52496
82 52126
131 52496
141 51522
142 51522
180 53130
258 ..... 51523, 52498
264 51523
265 51523
271 53132
300 ..... 50884, 51933, 52747, 52949
355 51816
721 50537

41 CFR

101–17 50507
101–45 50696
101–46 50696

42 CFR

403 51125
488 52862
489 52862
1003 52862
Proposed Rules:
418 52129

43 CFR

Public Land Orders:
3862 (corrected by PLO 7093) 52921
5023 (removed by PLO 7096) 52922
7091 50698
7092 50508
7093 52921
7094 52921
7095 52921
7096 52922
Proposed Rules:
11 52749

44 CFR

64 53110
65 ..... 52436, 52438
67 52439
Proposed Rules:
67 52501

45 CFR

801 51387
Proposed Rules:
233 51536
1355 50646
1356 50646
1357 ..... 50646, 52951

46 CFR

10 50964
69 50508
Proposed Rules:
Ch. I 50537, 52276
30 52133
31 52133
32 52133
34 52133
35 52133
70 52133
72 52133
76 52133
77 52133
78 52133
90 52133
92 52133
95 52133
159 52590
160 52590
190 52133
193 52133
540 52133

47 CFR

0 50167
24 50509
25 53294
73 ..... 50168, 50169, 50850, 51130, 51518, 51866, 51867, 51868, 51869, 52086, 52441, 52442
76 ..... 51869, 52087, 53113
94 53294
Proposed Rules:
1 51538
73 ..... 50719, 50886, 50887, 51153, 51398, 51539, 51540
76 ..... 50538, 51934

48 CFR

209 ..... 51130, 51132
213 50851
216 53116
225 ..... 50511, 51132
235 52442
242 53116
247 50851
252 ..... 51130, 51132, 53116
538 52450
552 ..... 52253, 52450
570 52253
Proposed Rules:
22 51399
31 51399
42 51399
45 52277
52 52277
242 50539
252 ..... 51130, 51132, 52277
970 52505
1815 51154
1819 51154
1827 51936
1852 ..... 51154, 51936
1870 51154

49 CFR

171 53116
219 50699
397 51824
571 51229
572 52089
591 52095
592 52095
1249 52099
604 51133
1002 52372
1039 51134
Proposed Rules:
171 51157
177 51157
178 51157
179 51157
180 51157
192 52863
195 52863
229 52953
231 52953
232 52953
391 50887
393 51540
571 51158
1002 51546
1160 51546
1161 51546
1162 51546
1163 51546

50 CFR

17 ..... 50796, 50852
20 ..... 50424, 53334
100 51855
215 50372
216 ..... 50372, 52922
285 51871
301 ..... 51871, 53117
625 50512
640 53118
642 53120
663 ..... 50857, 51871
672 ..... 50169, 50170, 50699, 51134, 51872, 51873, 52099, 52923
675 ..... 50699, 50858, 51387, 51873, 51874, 52452, 53121
676 ..... 51135, 51874
678 ..... 51388, 52453
685 52924
Proposed Rules:
17 ..... 50540, 50550, 50557, 51404
32 53338
216 51552
285 52277
638 52136
640 52136
642 52136
646 52136
651 53133
654 52507
659 52136
675 ..... 50893, 52277
676 52862
678 52277

LIST OF PUBLIC LAWS

This is a continuing list of public bills from the current session of Congress which have become Federal laws. It may be used in conjunction with "PLUS" (Public Laws Update Service) on 202–523–6641. The text of laws is not published in the **Federal Register** but may be ordered in individual pamphlet form (referred to as "slip laws") from the Superintendent of Documents, U.S. Government Printing Office, Washington, DC 20402 (phone, 202–512–2470).

H.R. 1520/P.L. 103–371

Petroleum Marketing Practices Act Amendments of 1994 (Oct. 19, 1994; 108 Stat. 3484; 3 pages)

H.R. 2826/P.L. 103–372

To provide for an investigation of the whereabouts of the United States citizens and others who have been missing from Cyprus since 1974. (Oct. 19, 1994; 108 Stat. 3487; 1 page)

H.R. 2902/P.L. 103–373

Federal Payment Reauthorization Act of 1994 (Oct. 19, 1994; 108 Stat. 3488; 4 pages)

H.R. 3485/P.L. 103–374

To authorize appropriations for carrying out the Earthquake Hazards Reduction Act of 1977 for fiscal years 1995 and 1996. (Oct. 19, 1994; 108 Stat. 3492; 2 pages)

H.R. 4308/P.L. 103–375

North American Wetlands Conservation Act Amendments of 1994 (Oct. 19, 1994; 108 Stat. 3494; 3 pages)

H.R. 4379/P.L. 103–376

Farm Credit System Agricultural Export and Risk Management Act (Oct. 19, 1994; 108 Stat. 3497; 4 pages)

H.R. 4653/P.L. 103–377

Mohegan Nation of Connecticut Land Claims Settlement Act of 1994 (Oct. 19, 1994; 108 Stat. 3501; 7 pages)

H.R. 5155/P.L. 103–378

To authorize the transfer of naval vessels to certain foreign countries. (Oct. 19, 1994; 108 Stat. 3508; 2 pages)

H.J. Res. 401/P.L. 103–379

Designating the months of March 1995 and March 1996 as "Irish-American Heritage Month". (Oct. 19, 1994; 108 Stat. 3510; 2 pages)

H.J. Res. 417/P.L. 103–380

Providing for temporary extension of the application of the final paragraph of section 10 of the Railway Labor Act with respect to the dispute between the Soo Line Railroad Company and certain of its employees. (Oct. 19, 1994; 108 Stat. 3512; 1 page)

S. 2475/P.L. 103–381

African Conflict Resolution Act (Oct. 19, 1994; 108 Stat. 3513; 5 pages)

Last List October 20, 1994

Microfiche Editions Available...

Federal Register

The Federal Register is published daily in 24x microfiche format and mailed to subscribers the following day via first class mail. As part of a microfiche Federal Register subscription, the LSA (List of CFR Sections Affected) and the Cumulative Federal Register Index are mailed monthly.

Code of Federal Regulations

The Code of Federal Regulations, comprising approximately 200 volumes and revised at least once a year on a quarterly basis, is published in 24x microfiche format and the current year's volumes are mailed to subscribers as issued.

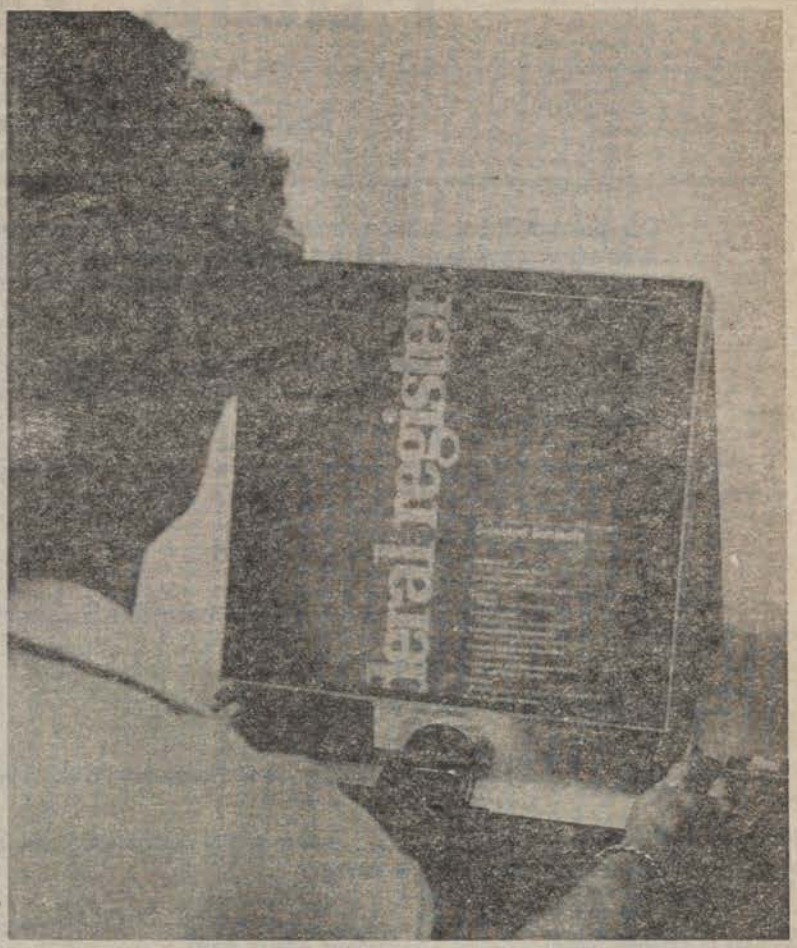

Microfiche Subscription Prices:

Federal Register:

One year: $433.00
Six months: $216.50

Code of Federal Regulations:

Current year (as issued): $264.00

Superintendent of Documents Subscription Order Form

Order Processing Code:
*** 5419**

Charge your order. It's easy! MasterCard VISA

To fax your orders (202) 512–2233

☐ **YES,** enter the following indicated subscriptions in 24x microfiche format:

____ **Federal Register** (MFFR) ☐ One year at $433 each ☐ Six months at $216.50

____ **Code of Federal Regulations** (CFRM5) ☐ One year at $264 each

The total cost of my order is $ _____. Price includes regular domestic postage and handling and is subject to change. International customers please add 25%.

(Company or personal name) (Please type or print)

(Additional address/attention line)

(Street address)

(City, State, Zip code)

(Daytime phone including area code)

(Purchase order no.)

For privacy, check box below:
☐ Do not make my name available to other mailers

Check method of payment:
☐ Check payable to Superintendent of Documents
☐ GPO Deposit Account ☐☐☐☐☐☐☐ – ☐
☐ VISA ☐ MasterCard ☐☐☐☐ (expiration)

(Authorizing signature) 10/94

Thank you for your order!

Mail to: Superintendent of Documents
P.O. Box 371954, Pittsburgh, PA 15250–7954

Public Laws

103d Congress, 2d Session, 1994

Pamphlet prints of public laws, often referred to as slip laws, are the initial publication of Federal laws upon enactment and are printed as soon as possible after approval by the President. Legislative history references appear on each law. Subscription service includes all public laws, issued irregularly upon enactment, for the 103d Congress, 2d Session, 1994.

(Individual laws also may be purchased from the Superintendent of Documents, Washington, DC 20402-9328. Prices vary. See Reader Aids Section of the Federal Register for announcements of newly enacted laws.)

Superintendent of Documents **Subscriptions** Order Form

Order Processing Code:
*** 6216**

☐ **YES**, enter my subscription(s) as follows:

Charge your order. It's Easy! MasterCard VISA

To fax your orders (202) 512-2233

_____ subscriptions to **PUBLIC LAWS** for the 103d Congress, 2d Session, 1994 for $156 per subscription.

The total cost of my order is $_____. International customers please add 25%. Prices include regular domestic postage and handling and are subject to change.

(Company or Personal Name) (Please type or print)

(Additional address/attention line)

(Street address)

(City, State, ZIP Code)

(Daytime phone including area code)

(Purchase Order No.)

May we make your name/address available to other mailers? YES ☐ NO ☐

Please Choose Method of Payment:

☐ Check Payable to the Superintendent of Documents

☐ GPO Deposit Account ☐☐☐☐☐☐☐-☐

☐ VISA or MasterCard Account

☐☐☐☐☐☐☐☐☐☐☐☐☐☐☐☐☐☐☐☐

☐☐☐☐ (Credit card expiration date)

Thank you for your order!

(Authorizing Signature) (1/94)

Mail To: New Orders, Superintendent of Documents
P.O. Box 371954, Pittsburgh, PA 15250-7954

Printed on recycled paper