AUTHENTICATED
U.S. GOVERNMENT
INFORMATION
GPO

8–15–94
Vol. 59 No. 156

federal register

Monday
August 15, 1994

NOW AVAILABLE ONLINE!
Subscribe Now ... Only $375 Per Year
See Page II for Details.

United States
Government
Printing Office
SUPERINTENDENT
OF DOCUMENTS
Washington, DC 20402

OFFICIAL BUSINESS
Penalty for private use, $300

SECOND CLASS NEWSPAPER

Postage and Fees Paid
U.S. Government Printing Office
(ISSN 0097–6326)

8–15–94
Vol. 59 No. 156
Pages 41637–41972

federal register

Monday
August 15, 1994

Briefing on How To Use the Federal Register
For information on briefings in Denver, CO and Washington, DC, see announcement on the inside cover of this issue.

FEDERAL REGISTER Published daily, Monday through Friday, (not published on Saturdays, Sundays, or on official holidays), by the Office of the Federal Register, National Archives and Records Administration, Washington, DC 20408, under the Federal Register Act (49 Stat. 500, as amended; 44 U.S.C. Ch. 15) and the regulations of the Administrative Committee of the Federal Register (1 CFR Ch. I). Distribution is made only by the Superintendent of Documents, U.S. Government Printing Office, Washington, DC 20402.

The **Federal Register** provides a uniform system for making available to the public regulations and legal notices issued by Federal agencies. These include Presidential proclamations and Executive Orders and Federal agency documents having general applicability and legal effect, documents required to be published by act of Congress and other Federal agency documents of public interest. Documents are on file for public inspection in the Office of the Federal Register the day before they are published, unless earlier filing is requested by the issuing agency.

The seal of the National Archives and Records Administration authenticates this issue of the **Federal Register** as the official serial publication established under the Federal Register Act. 44 U.S.C. 1507 provides that the contents of the **Federal Register** shall be judicially noticed.

The **Federal Register** is published in paper, 24x microfiche and as an online database through *GPO Access*, a service of the U.S. Government Printing Office. The online database is updated by 6 a.m. each day the **Federal Register** is published. The database includes both text and graphics from Volume 59, Number 1 (January 2, 1994) forward. It is available on a Wide Area Information Server (WAIS) through the Internet and via asynchronous dial-in. The annual subscription fee for a single workstation is $375. Six-month subscriptions are available for $200 and one month of access can be purchased for $35. Discounts are available for multiple-workstation subscriptions. To subscribe, Internet users should telnet to wais.access.gpo.gov and login as newuser (all lower case); no password is required. Dial in users should use communications software and modem to call (202) 512–1661 and login as wais (all lower case); no password is required; at the second login prompt, login as newuser (all lower case); no password is required. Follow the instructions on the screen to register for a subscription for the **Federal Register** Online via *GPO Access*. For assistance, contact the *GPO Access* User Support Team by sending Internet e-mail to help@eids05.eids.gpo.gov, or a fax to (202) 512–1262, or by calling (202) 512–1530 between 7 a.m. and 5 p.m. Eastern time, Monday through Friday, except Federal holidays.

The annual subscription price for the **Federal Register** paper edition is $444, or $490 for a combined **Federal Register**, Federal Register Index and List of CFR Sections Affected (LSA) subscription; the microfiche edition of the **Federal Register** including the Federal Register Index and LSA is $403. Six month subscriptions are available for one-half the annual rate. The charge for individual copies in paper form is $6.00 for each issue, or $6.00 for each group of pages as actually bound; or $1.50 for each issue in microfiche form. All prices include regular domestic postage and handling. International customers please add 25% for foreign handling. Remit check or money order, made payable to the Superintendent of Documents, or charge to your GPO Deposit Account, VISA or MasterCard. Mail to: New Orders, Superintendent of Documents, P.O. Box 371954, Pittsburgh, PA 15250–7954.

There are no restrictions on the republication of material appearing in the **Federal Register**.

How To Cite This Publication: Use the volume number and the page number. Example: 59 FR 12345.

SUBSCRIPTIONS AND COPIES

PUBLIC

Subscriptions:

Paper or fiche	202–512–1800
Assistance with public subscriptions	512–1806

Online:

Telnet wais.access.gpo.gov, login as newuser <enter>, no password <enter>; or use a modem to call (202) 512–1661, login as wais, no password <enter>, at the second login as newuser <enter>, no password <enter>.

Assistance with online subscriptions	202–512–1530

Single copies/back copies:

Paper or fiche	512–1800
Assistance with public single copies	512–1803

FEDERAL AGENCIES

Subscriptions:

Paper or fiche	523–5243
Assistance with Federal agency subscriptions	523–5243

For other telephone numbers, see the Reader Aids section at the end of this issue.

THE FEDERAL REGISTER
WHAT IT IS AND HOW TO USE IT

FOR: Any person who uses the Federal Register and Code of Federal Regulations.

WHO: The Office of the Federal Register.

WHAT: Free public briefings (approximately 3 hours) to present:

1. The regulatory process, with a focus on the Federal Register system and the public's role in the development of regulations.
2. The relationship between the Federal Register and Code of Federal Regulations.
3. The important elements of typical Federal Register documents.
4. An introduction to the finding aids of the FR/CFR system.

WHY: To provide the public with access to information necessary to research Federal agency regulations which directly affect them. There will be no discussion of specific agency regulations.

WASHINGTON, DC
(TWO BRIEFINGS)

WHEN: September 13 at 9:00 am and 1:30 pm
WHERE: Office of the Federal Register
Conference Room, 800 North Capitol Street NW, Washington, DC (3 blocks north of Union Station Metro)
RESERVATIONS: 202–523–4538

DENVER, CO

WHEN: September 21, 9:00 am–12 noon
WHERE: Colorado National Bank Building
12345 W. Alameda Parkway,
Room 207, Lakewood, CO
RESERVATIONS: Federal Information Center
1–800–359–3997

Printed on recycled paper containing 100% post consumer waste

Contents

Federal Register
Vol. 59, No. 156
Monday, August 15, 1994

Agency for Toxic Substances and Disease Registry
NOTICES
Grants and cooperative agreements; availability, etc.:
Toxic interactions for chemical mixtures; public health assessment research program, 41764–41767

Agricultural Marketing Service
RULES
Celery grown in Florida, 41637–41638
Marketing orders; expenses and assessment rates, 41638–41640
PROPOSED RULES
Kiwifruit grown in California, 41717–41719

Agriculture Department
See Agricultural Marketing Service
See Food Safety and Inspection Service

Army Department
See Engineers Corps

Centers for Disease Control and Prevention
NOTICES
Grant and cooperative agreement awards:
American Academy of Dermatology, 41768–41769
Washington State Health Department, 41767–41768

Commerce Department
See International Trade Administration
See Minority Business Development Agency
See National Oceanic and Atmospheric Administration
NOTICES
Agency information collection activities under OMB review, 41746–41747

Consumer Product Safety Commission
PROPOSED RULES
Bicycle helmets; safety standards, 41719–41739

Defense Department
See Defense Nuclear Agency
See Engineers Corps

Defense Nuclear Agency
PROPOSED RULES
Privacy Act; implementation, 41739–41740

Drug Enforcement Administration
NOTICES
Applications, hearings, determinations, etc.:
Ciba-Geigy Corp., 41785
Hayes, Jude R., M.D., 41785–41787
Kilian, Robert J., M.D., 41787–41789
Pawlyszyn, Demetrius, M.D., 41789–41791
Sigma Chemical Co., 41791

Education Department
RULES
Postsecondary education:
Strengthening institutions program, 41914–41925
Special education and rehabilitative services:
Independent living services programs, 41880–41912
NOTICES
Grants and cooperative agreements; availability, etc.:
Safe schools program, 41928–41945

Employment and Training Administration
RULES
Administrative Law Judges Office proceedings:
Filing and service requirements, 41874–41878
NOTICES
Adjustment assistance:
F.C.I. et al., 41794–41795
Gordon County Farm et al., 41791–41792
Sunnyside Coal Co., 41795
Adjustment assistance and NAFTA transitional adjustment assistance:
Andre Fashions et al., 41792–41794
NAFTA transitional adjustment assistance:
Elf Atochem North America, Inc., 41795

Energy Department
See Energy Information Administration
See Federal Energy Regulatory Commission
See Hearings and Appeals Office, Energy Department
RULES
Uranium enrichment decontamination and decommissioning fund; domestic utilities special assessment procedures, 41956–41965
NOTICES
Grant and cooperative agreement awards:
American Council for An Energy Efficient Economy, 41752
American Geological Institute, 41752
Iowa Natural Resources Department, 41752–41753

Energy Information Administration
NOTICES
Forms; availability, etc.:
Natural gas monthly quantity and value report, 41753–41754

Engineers Corps
NOTICES
Organization, functions, and authority delegations:
Defense Secretarv et al.; Harbor Maintenance Trust Fund status annual report; transmittal to Congress, 41751
Reports; availability, etc.:
Harbor Maintenance Trust Fund status; report to Congress (1993 FY), 41751–41752

Environmental Protection Agency
RULES
Air quality implementation plans; approval and promulgation; various States:
Massachusetts, 41706–41708
North Carolina, 41708–41709
Wisconsin, 41709–41711
PROPOSED RULES
Air programs:
Stratospheric ozone protection—Refrigerant recycling program, 41968–41972
Air quality implementation plans; approval and promulgation; various States:
North Carolina, 41740–41741

Hazardous waste:
Combustion permitting procedures; public participation, 41741
Land disposal restrictions; exemptions—
Great Lakes Chemical Corp., 41741–41745
NOTICES
Agency information collection activities under OMB review, 41757–41758
Clean Air Act:
Acid rain provisions—
State permits, 41758–41759
Superfund; response and remedial actions, proposed settlements, etc.:
Torch Lake, MI, 41759

Federal Aviation Administration
RULES
Airworthiness directives:
Boeing, 41645–41655
GROB Luft und Raumfahrt, 41662–41663
Pratt & Whitney, 41655–41662
Schweizer Aircraft Corp. et al., 41643–41645

Federal Communications Commission
RULES
Radio stations; table of assignments:
Texas, 41711
NOTICES
Agency information collection activities under OMB review, 41759–41760
Rulemaking proceedings; petitions filed, granted, denied, etc., 41760

Federal Energy Regulatory Commission
PROPOSED RULES
Electric utilities (Federal Power Act):
Public and transmitting utilities; stranded costs recovery, 41739
NOTICES
Natural gas certificate filings:
Koch Gateway Pipeline Co. et al., 41754–41755
Applications, hearings, determinations, etc.:
Bedford, VA, et al., 41755
Colorado Interstate Gas Co., 41755

Federal Maritime Commission
NOTICES
Complaints filed:
Balladin, Marion L., et al., 41760–41761
Investigations, hearings, petitions, etc.:
Trans-Atlantic Agreement, 41761

Federal Reserve System
NOTICES
Agency information collection activities under OMB review, 41761–41762
Meetings; Sunshine Act, 41814
Applications, hearings, determinations, etc.:
Meridian Bancorp, Inc., 41762
Pikeville National Corp. et al., 41762–41763

Fish and Wildlife Service
RULES
Importation, exportation, and transportation of wildlife:
Live farm-raised fish and fish eggs; export requirements, exemption, 41711–41715

Food and Drug Administration
RULES
Animal drugs, feeds, and related products:
Butorphanol tartrate injection, 41665
Ceftiofur, 41665–41666
Ketamine hydrochloride injection, 41663–41664
Oxytetracycline hydrochloride soluble powder, 41664–41665
NOTICES
Food additive petitions:
Vanetta (U.S.A.) Inc., 41769
Grants and cooperative agreements; availability, etc.:
Orphan drug products; safety and effectiveness in rare diseases and conditions; clinical studies, 41769–41773
Medical devices; premarket approval:
OPUS CEA, 41773–41774
VENTAK PRx Models 1700 and 1705 AICD System, etc., 41774

Food Safety and Inspection Service
RULES
Meat and poultry inspection:
Sodium citrate as tripe denuding agent, 41640–41641

Foreign Claims Settlement Commission
NOTICES
Meetings; Sunshine Act, 41814

General Services Administration
NOTICES
Information resources management:
North American telephone numbering plan; changes, 41763

Health and Human Services Department
See Agency for Toxic Substances and Disease Registry
See Centers for Disease Control and Prevention
See Food and Drug Administration
See Inspector General Office, Health and Human Services Department
See National Institutes of Health
See Substance Abuse and Mental Health Services Administration
NOTICES
Meetings:
Research Integrity Commission, 41763
Organization, functions, and authority delegations:
Consumer Affairs Office, 41763–41764

Health Care Financing Administration
See Inspector General Office, Health and Human Services Department

Hearings and Appeals Office, Energy Department
NOTICES
Special refund procedures; implementation, 41755–41757

Housing and Urban Development Department
NOTICES
Meetings:
Lead-Based Paint Hazard Reduction and Financing Task Force, 41779–41780

Immigration and Naturalization Service
RULES
Nonimmigrant classes:
Temporary alien workers seeking H-1B, O, and P classifications, 41818–41842

PROPOSED RULES
Nonimmigrant classes:
Foreign employers seeking to employ temporary alien workers in H, O, and P nonimmigrant classifications, 41843–41846

Indian Affairs Bureau
PROPOSED RULES
Financial activities:
Individual Indian money accounts, 41948–41953

Inspector General Office, Health and Human Services Department
NOTICES
Program exclusions; list, 41776–41779

Interior Department
See Fish and Wildlife Service
See Indian Affairs Bureau
See Land Management Bureau

Internal Revenue Service
RULES
Income taxes:
Consolidated return regulations—
Stock basis and excess loss accounts, etc., 41666–41704
PROPOSED RULES
Income taxes:
Charitable contributions; substantiation requirement
Hearing, 41739

International Development Cooperation Agency
See Overseas Private Investment Corporation

International Trade Administration
NOTICES
United States-Canada free-trade agreement; binational panel reviews:
Softwood lumber products from—
Canada, 41747–41749

Interstate Commerce Commission
NOTICES
Railroad services abandonment:
Illinois Central Railroad Co., 41783

Justice Department
See Drug Enforcement Administration
See Foreign Claims Settlement Commission
See Immigration and Naturalization Service
See Justice Statistics Bureau

Justice Statistics Bureau
NOTICES
Grants and cooperative agreements; availability, etc.:
Statistics program, 41783–41785

Labor Department
See Employment and Training Administration
RULES
Administrative Law Judges Office proceedings:
Filing and service requirements, 41874–41878

Land Management Bureau
NOTICES
Boundary establishment, descriptions, etc.:
John Day River, OR, 41780
Closure of public lands:
Nevada, 41780–41781
Environmental statements; availability:
River Gas of Utah, Inc. Coalbed Methane Project, UT, 41781
Realty actions; sales, leases, etc.:
Alaska, 41781–41782

Minority Business Development Agency
NOTICES
Business development center program applications:
Alaska, 41749
Native American business development center program applications:
Cherokee, 41749–41750

National Aeronautics and Space Administration
NOTICES
Inventions, Government-owned; availability for licensing, 41795–41797

National Highway Traffic Safety Administration
NOTICES
Motor vehicle safety standards:
Nonconforming vehicles—
Importation eligibility; determinations, 41811–41813

National Institutes of Health
NOTICES
Meetings:
Fogarty International Center Advisory Board, 41775
National Institute of Allergy and Infectious Diseases, 41775
National Institute of Mental Health, 41776
National Institute on Alcohol Abuse and Alcoholism, 41775
National Institute on Deafness and Other Communication Disorders, 41775–41776
Research Grants Division Behavioral and Neurosciences Special Emphasis Panel, 41776

National Oceanic and Atmospheric Administration
NOTICES
Meetings:
Private Enterprise-Government Interactions Task Group, 41751
Permits:
Marine mammals, 41750–41751

National Science Foundation
NOTICES
Meetings:
Geosciences Special Emphasis Panel, 41797
Meetings; Sunshine Act, 41814

Nuclear Regulatory Commission
RULES
Radiation protection standards:
Protection of individuals exposed to ionizing radiation from routine activities licensed by NRC; removal of expired material; clarification, 41641–41643
NOTICES
Environmental statements; availability, etc.:
Sacramento Municipal Utility District, 41797–41799
South Carolina Electric & Gas Co. et al., 41799–41800
Texas Utilities Electric Co. et al., 41800
Meetings:
Nuclear fuel cycle facilities, integrated safety analysis; guidance document; workshop, 41800–41801
Reactor Safeguards Advisory Committee, 41801–41802

Applications, hearings, determinations, etc.:
Carolina Power & Light Co., 41804
Commonwealth Edison Co., 41802–41804
Peco Energy Co., 41804–41806

Overseas Private Investment Corporation
NOTICES
Agency information collection activities under OMB review, 41782–41783

Pension Benefit Guaranty Corporation
RULES
Single-employer plans:
Valuation of plan benefits—
Interest rates and factors, 41704–41706

Personnel Management Office
PROPOSED RULES
Retirement:
Civil Service and Federal Employees Retirement System—
Survivor annuity entitlement based on remarriage before age 55; termination, 41716–41717
NOTICES
Meetings:
Federal Salary Council, 41806

Public Health Service
See Agency for Toxic Substances and Disease Registry
See Centers for Disease Control and Prevention
See Food and Drug Administration
See National Institutes of Health
See Substance Abuse and Mental Health Services Administration

Research and Special Programs Administration
PROPOSED RULES
Hazardous materials:
Hazard materials identification systems; improvements, 41848–41872

Securities and Exchange Commission
NOTICES
Meetings; Sunshine Act, 41814–41815
Self-regulatory organizations; proposed rule changes:
American Stock Exchange, Inc., 41807–41808
Applications, hearings, determinations, etc.:
Minnesota Mutual Life Insurance Co. et al., 41808–41810

Substance Abuse and Mental Health Services Administration
NOTICES
Meetings; advisory committees:
September, 41779

Tennessee Valley Authority
NOTICES
Meetings; Sunshine Act, 41815

Toxic Substances and Disease Registry Agency
See Agency for Toxic Substances and Disease Registry

Transportation Department
See Federal Aviation Administration
See National Highway Traffic Safety Administration
See Research and Special Programs Administration
NOTICES
Aviation proceedings:
Agreements filed; weekly receipts, 41810
Certificates of public convenience and necessity and foreign air carrier permits; weekly applications, 41810–41811
Hearings, etc.—
Miami Air Charter, 41810

Treasury Department
See Internal Revenue Service
NOTICES
Agency information collection activities under OMB review, 41813

Separate Parts In This Issue

Part II
Department of Justice, Immigration and Naturalization Service, 41818–41846

Part III
Department of Transportation, Research and Special Programs Administration, 41848–41872

Part IV
Department of Labor, Employment and Training Administration, 41874–41878

Part V
Department of Education, 41880–41912

Part VI
Department of Education, 41914–41925

Part VII
Department of Education, 41928–41945

Part VIII
Department of the Interior, Bureau of Indian Affairs, 41948–41953

Part IX
Department of Energy, 41956–41965

Part X
Environmental Protection Agency, 41968–41972

Reader Aids
Additional information, including a list of public laws, telephone numbers, and finding aids, appears in the Reader Aids section at the end of this issue.

Electronic Bulletin Board
Free **Electronic Bulletin Board** service for Public Law numbers, **Federal Register** finding aids, and a list of documents on public inspection is available on 202–275–1538 or 275–0920.

CFR PARTS AFFECTED IN THIS ISSUE

A cumulative list of the parts affected this month can be found in the Reader Aids section at the end of this issue.

5 CFR
Proposed Rules:
831 41716
842 41716

7 CFR
958 41638
967 41637
982 41638
Proposed Rules:
920 41717

8 CFR
214 41818
Proposed Rules:
214 41843
274a 41843

9 CFR
318 41640

10 CFR
19 41641
20 41641
35 41641
40 41641
766 41956

14 CFR
39 (6 documents) 41643, 41645, 41647, 41653, 41655, 41662

16 CFR
Proposed Rules:
1203 41719

18 CFR
Proposed Rules:
35 41739

20 CFR
655 41874

21 CFR
510 41663
520 41664
522 (3 documents) 41663, 41665

25 CFR
Proposed Rules:
115 41948

26 CFR
1 41666
602 41666
Proposed Rules:
1 41739

29 CFR
18 41874
24 41874
2619 41704
2676 41704

32 CFR
Proposed Rules:
318 41739

34 CFR
364 41880
365 41880
366 41880
367 41880
607 41914

40 CFR
52 (3 documents) 41706, 41708, 41709
Proposed Rules:
52 41740
82 41968
124 41741
268 41741
270 41741

47 CFR
73 41711

49 CFR
Proposed Rules:
171 41848
172 41848
173 41848
174 41848
175 41848
176 41848
177 41848

50 CFR
14 41711

Rules and Regulations

Federal Register
Vol. 59, No. 156
Monday, August 15, 1994

This section of the FEDERAL REGISTER contains regulatory documents having general applicability and legal effect, most of which are keyed to and codified in the Code of Federal Regulations, which is published under 50 titles pursuant to 44 U.S.C. 1510.

The Code of Federal Regulations is sold by the Superintendent of Documents. Prices of new books are listed in the first FEDERAL REGISTER issue of each week.

DEPARTMENT OF AGRICULTURE

Agricultural Marketing Service

7 CFR Part 967

[Docket No. FV94-967-1IFR]

Celery Grown in Florida; Expenses and Assessment Rate

AGENCY: Agricultural Marketing Service, USDA.

ACTION: Interim final rule with request for comments.

SUMMARY: This interim final rule authorizes expenditures and establishes an assessment rate under Marketing Order No. 967 for the 1994–95 fiscal year. Authorization of this budget enables the Florida Celery Committee (Committee) to incur expenses that are reasonable and necessary to administer the program. Funds to administer this program are derived from assessments on handlers.

DATES: Effective August 1, 1994, through July 31, 1995. Comments received by September 14, 1994, will be considered prior to issuance of a final rule.

ADDRESSES: Interested persons are invited to submit written comments concerning this action. Comments must be sent in triplicate to the Docket Clerk, Fruit and Vegetable Division, AMS, USDA, P.O. Box 96456, Room 2523–S, Washington, DC 20090–6456, FAX 202–720–5698. Comments should reference the docket number and the date and page number of this issue of the **Federal Register** and will be available for public inspection in the Office of the Docket Clerk during regular business hours.

FOR FURTHER INFORMATION CONTACT: Martha Sue Clark, Marketing Order Administration Branch, Fruit and Vegetable Division, AMS, USDA, P.O. Box 96456, room 2523–S, Washington, DC 20090–9456, telephone 202–720–9918, or William G. Pimental, Southeast Marketing Field Office, Fruit and Vegetable Division, AMS, USDA, P.O. Box 2276, Winter Haven, FL 33883–2276, telephone 813–299–4770.

SUPPLEMENTARY INFORMATION: This rule is issued under Marketing Agreement No. 149 and Order No. 967, both as amended (7 CFR part 967), regulating the handling of celery grown in Florida. The marketing agreement and order are effective under the Agricultural Marketing Agreement Act of 1937, as amended (7 U.S.C. 601–674), hereinafter referred to as the Act.

The Department of Agriculture (Department) is issuing this rule in conformance with Executive Order 12866.

This interim final rule has been reviewed under Executive Order 12778, Civil Justice Reform. Under the provisions of the marketing order now in effect, Florida celery is subject to assessments. It is intended that the assessment rate as issued herein will be applicable to all assessable celery handled during the 1994–95 fiscal year, which begins August 1, 1994, and ends July 31, 1995. This interim final rule will not preempt any State or local laws, regulations, or policies, unless they present an irreconcilable conflict with this rule.

The Act provides that administrative proceedings must be exhausted before parties may file suit in court. Under section 608c(15)(A) of the Act, any handler subject to an order may file with the Secretary a petition stating that the order, any provision of the order, or any obligation imposed in connection with the order is not in accordance with law and requesting a modification of the order or to be exempted therefrom. Such handler is afforded the opportunity for a hearing on the petition. After the hearing the Secretary would rule on the petition. The Act provides that the district court of the United States in any district in which the handler is an inhabitant, or has his or her principal place of business, has jurisdiction in equity to review the Secretary's ruling on the petition, provided a bill in equity is filed not later than 20 days after the date of the entry of the ruling.

Pursuant to the requirements set forth in the Regulatory Flexibility Act (RFA), the Administrator of the Agricultural Marketing Service (AMS) has considered the economic impact of this rule on small entities.

The purpose of the RFA is to fit regulatory actions to the scale of business subject to such actions in order that small businesses will not be unduly or disproportionately burdened. Marketing orders issued pursuant to the Act, and the rules issued thereunder, are unique in that they are brought about through group actions of essentially small entities acting on their own behalf. Thus, both statutes have small entity orientation and compatibility.

There are seven producers of Florida celery under this marketing order, and seven handlers. Small agricultural producers have been defined by the Small Business Administration (13 CFR 121.601) as those having annual receipts of less than $500,000, and small agricultural service firms are defined as those whose annual receipts are less than $5,000,000. The majority of Florida celery producers and handlers may be classified as small entities.

The budget of expenses for the 1994–95 fiscal year was prepared by the Florida Celery Committee, the agency responsible for local administration of the marketing order, and submitted to the Department for approval. The members of the Committee are producers and handlers of Florida celery. They are familiar with the Committee's needs and with the costs of goods and services in their local area and are thus in a position to formulate an appropriate budget. The budget was formulated and discussed in a public meeting. Thus, all directly affected persons have had an opportunity to participate and provide input.

The assessment rate recommended by the Committee was derived by dividing anticipated expenses by expected shipments of Florida celery. Because that rate will be applied to actual shipments, it must be established at a rate that will provide sufficient income to pay the Committee's expenses.

The Committee met June 15, 1994, and unanimously recommended a 1994–95 budget of $42,000, $3,000 less than the previous year. The budget item for 1994–95 which has increased compared to 1993–94 is $200 for the contingency reserve for which no funding was recommended last year. Budget items which have decreased compared to the amount budgeted for 1993–94 (in parentheses) are: Travel for Committee personnel, $1,000 ($2,000), telephone and telegraph, $500 ($600),

postage, $200 ($300), and promotion, merchandising, and public relations, $13,000 ($15,000). All other items are budgeted at last year's amounts.

The Committee also unanimously recommended an assessment rate of $0.01 per crate, the same as last season. This rate, when applied to anticipated shipments of 4,200,000 crates, will yield $42,000 in assessment income. Funds in the Committee's authorized reserve as of June 15, 1994, estimated at $15,000, were within the maximum permitted by the order of one marketing year's expenses.

While this action will impose some additional costs on handlers, the costs are in the form of uniform assessments on handlers. Some of the additional costs may be passed on to producers. However, these costs will be offset by the benefits derived by the operation of the marketing order. Therefore, the Administrator of the AMS has determined that this action will not have a significant economic impact on a substantial number of small entities.

After consideration of all relevant matter presented, including the information and recommendations submitted by the Committee and other available information, it is hereby found that this rule, as hereinafter set forth, will tend to effectuate the declared policy of the Act.

Pursuant to 5 U.S.C. 553, it is also found and determined upon good cause that it is impracticable, unnecessary, and contrary to the public interest to give preliminary notice prior to putting this rule into effect and that good cause exists for not postponing the effective date of this action until 30 days after publication in the **Federal Register** because: (1) The Committee needs to have sufficient funds to pay its expenses which are incurred on a continuous basis; (2) the fiscal year begins on August 1, 1994, and the marketing order requires that the rate of assessment for the fiscal year apply to all assessable Florida celery handled during the fiscal year; (3) handlers are aware of this action which was unanimously recommended by the Committee at a public meeting and which is similar to budgets issued in past years; and (4) this interim final rule provides a 30-day comment period, and all comments timely received will be considered prior to finalization of this action.

List of Subjects in 7 CFR Part 967

Celery, Marketing agreements, Reporting and recordkeeping requirements.

For the reasons set forth in the preamble, 7 CFR part 967 is amended as follows:

PART 967—CELERY GROWN IN FLORIDA

1. The authority citation for 7 CFR part 967 continues to read as follows:

Authority: 7 U.S.C. 601–674.

2. A new § 967.229 is added to read as follows:

Note: This section will not appear in the Code of Federal Regulations.

§ 967.229 Expenses and assessment rate.

Expenses of $42,000 by the Florida Celery Committee are authorized, and an assessment rate of $0.01 per crate of assessable celery is established for the fiscal year ending July 31, 1995. Unexpended funds may be carried over as a reserve.

Dated: August 8, 1994.

Robert C. Keeney,

Deputy Director, Fruit and Vegetable Division.

[FR Doc. 94–19895 Filed 8–12–94; 8:45 am]

BILLING CODE 3410–02–P

---

7 CFR Parts 958 and 982

[Docket Nos. FV94–958–1FIR, FV94–982–2FIR]

Expenses and Assessment Rates for Specified Marketing Orders (Idaho-Eastern Oregon Onions and Oregon and Washington Filberts/Hazelnuts)

AGENCY: Agricultural Marketing Service, USDA.

ACTION: Final rule.

SUMMARY: The Department of Agriculture (Department) is adopting as a final rule, without change, the provisions of two interim final rules that authorized expenditures and established assessment rates under Marketing Orders 958 and 982 for the 1994–95 fiscal period. Authorization of these budgets enables the Idaho-Eastern Oregon Onion Committee and the Filbert/Hazelnut Marketing Board (Committee and Board) to incur expenses that are reasonable and necessary to administer the programs. Funds to administer these programs are derived from assessments on handlers.

EFFECTIVE DATE: Sections 958.238 and 982.338 are effective July 1, 1994, through June 30, 1995.

FOR FURTHER INFORMATION CONTACT: Martha Sue Clark, Marketing Order Administration Branch, Fruit and Vegetable Division, AMS, USDA, P.O. Box 96456, room 2523–S, Washington, DC 20090–6456, telephone 202–720–9918; Robert J. Curry (M.O. 958) or Teresa L. Hutchinson (M.O. 982), Northwest Marketing Field Office, Fruit and Vegetable Division, AMS, USDA, Green-Wyatt Federal Building, room 369, 1220 Southwest Third Avenue, Portland, OR 97204, telephone 503–326–2724.

SUPPLEMENTARY INFORMATION: This rule is effective under Marketing Agreement No. 130 and Order No. 958, both as amended (7 CFR part 958), regulating the handling of onions grown in designated counties in Idaho, and Malheur County, Oregon; and Marketing Agreement and Order No. 982, both as amended (7 CFR part 982), regulating the handling of filberts/hazelnuts grown in Oregon and Washington. The marketing agreements and orders are effective under the Agricultural Marketing Agreement Act of 1937, as amended (7 U.S.C. 601–674), hereinafter referred to as the Act.

The Department of Agriculture (Department) is issuing this rule in conformance with Executive Order 12866.

This rule has been reviewed under Executive Order 12778, Civil Justice Reform. Under the marketing order provisions now in effect, Idaho-Eastern Oregon onions and Oregon-Washington filberts/hazelnuts are subject to assessments. It is intended that the assessment rates as issued herein will be applicable to all assessable onions and filberts/hazelnuts handled during the 1994–95 fiscal period, which began July 1, 1994, and ends June 30, 1995. This rule will not preempt any State or local laws, regulations, or policies, unless they present an irreconcilable conflict with this rule.

The Act provides that administrative proceedings must be exhausted before parties may file suit in court. Under section 608c(15)(A) of the Act, any handler subject to an order may file with the Secretary a petition stating that the order, any provision of the order, or any obligation imposed in connection with the order, is not in accordance with law and requesting a modification of the order or to be exempted therefrom. A handler is afforded the opportunity for a hearing on the petition. After the hearing the Secretary would rule on the petition. The Act provides that the district court of the United States in any district in which the handler is an inhabitant, or has his or her principal place of business, has jurisdiction in equity to review the Secretary's ruling on the petition, provided a bill in equity is filed not later than 20 days after the date of the entry of the ruling.

Pursuant to requirements set forth in the Regulatory Flexibility Act (RFA), the Administrator of the Agricultural Marketing Service (AMS), has

considered the economic impact of this rule on small entities.

The purpose of the RFA is to fit regulatory actions to the scale of business subject to such actions in order that small businesses will not be unduly or disproportionately burdened. Marketing orders issued pursuant to the Act, and the rules issued thereunder, are unique in that they are brought about through group action of essentially small entities acting on their own behalf. Thus, both statues have small entity orientation and compatibility.

There are approximately 450 producers of Idaho-Eastern Oregon onions under Marketing Order 958, and approximately 35 handlers. Also, there are approximately 950 producers of Oregon and Washington filberts/hazelnuts under Marketing Order 982, and approximately 21 handlers. Small agricultural producers have been defined by the Small Business Administration (13 CFR 121.601) as those having annual receipts of less than $500,000, and small agricultural service firms are defined as those whose annual receipts are less than $5,000,000. The majority of the producers and handlers covered under these orders may be classified as small entities.

The budgets of expenses for the 1994–95 fiscal period were prepared by the Committee and the Board, the agencies responsible for local administration of their respective orders, and submitted to the Department for approval. The members of this Committee and the Board are producers and handlers of Idaho-Eastern Oregon onions and Oregon and Washington filberts/hazelnuts. They are familiar with the Committee's and Board's needs and with the costs for goods and services in their local areas and are thus in a position to formulate appropriate budgets. The budgets were formulated and discussed by the Committee and Board. Thus, directly affected persons have had an opportunity to participate and provide input.

The recommended assessment rates were derived by dividing anticipated Committee and Board expenses by expected respective shipments of Idaho-Eastern Oregon onions and assessable Oregon and Washington filberts/hazelnuts handled. Because these rates will be applied to actual shipments of onions and of assessable filberts/hazelnuts, the assessment rates must be established at levels that will provide sufficient income to pay the Committee's and Board's expenses.

The Idaho-Eastern Oregon Onion Committee met on March 22, 1994, and unanimously recommended a 1994–95 budget of $1,020,039, $10,161 less than the previous year. Increases in expenditures, which include $154 for research and $18,500 for promotion and advertising, will be offset by decreases of $18,495 for salary expenses and $10,320 for travel and office expenses. Major expenses items include $113,785 for salary expenses, $57,600 for travel and office expenses, $60,154 for research, $668,500 for promotion and advertising, $60,000 for export, and $50,000 for contingencies.

The Committee also unanimously recommended an assessment rate of $0.10 per hundredweight, the same as last season. This rate, when applied to anticipated shipments of 8,000,000 hundredweight, will yield $800,000 in assessment income. This, along with $30,000 in interest income and $190,039 from the Committee's authorized reserve, will be adequate to cover budgeted expenses. Funds in the reserve at the beginning of the 1994–95 fiscal period, estimated at $898,928, were within the maximum permitted by the order of one fiscal period's expenses.

In a mail vote conducted the week of March 28, 1994, the Filbert/Hazelnut Marketing Board unanimously recommended a 1994–95 budget of $507,010, $97,215 more than the previous year. The major budget item is $250,000 for the Board's promotion program to maintain and expand markets for filberts/hazelnuts. This is $30,000 more than budgeted last year for promotion. Other increases include $2,865 for general and administrative expenses, $1,350 for furniture, $1,000 for a crop survey, $20,000 for research, and $42,000 for the emergency reserve fund.

The Board also unanimously recommended an assessment rate of $0.007 per pound, the same as last year. This rate, when applied to anticipated shipments of 56,000,000 pounds, will yield $392,000 in assessment income. This, along with $28,000 from previously unassessed 1993 crop filberts, $6,000 in interest income, and $81,010 from the Board's authorized reserve, will be adequate to cover budgeted expenses. Funds in the reserve at the beginning of the 1994–95 marketing year, estimated at $453,673, were within the maximum permitted by the order of one marketing year's expenses.

Interim final rules were published in the **Federal Register** on May 12, 1994, for 7 CFR part 958 (59 FR 24631) and 7 CFR part 982 (59 FR 24632). Those rules added § 958.238 and § 982.338 which authorized expenses, and established assessment rates for the Committee and Board. Those rules provided that interested persons could file comments through June 13, 1994. No comments were received.

While this action will impose some additional costs on handlers, the costs are in the form of uniform assessments on handlers. Some of the additional costs may be passed on to producers. However, these costs will be offset by the benefits derived by the operation of the marketing orders. Therefore, the Administrator of the AMS has determined that this action will not have a significant economic impact on a substantial number of small entities.

It is found that the specified expenses for the marketing orders covered in this rulemaking are reasonable and likely to be incurred and that such expenses and the specified assessment rates to cover such expenses will tend to effectuate the declared policy of the Act.

It is further found that good cause exists for not postponing the effective date of this action until 30 days after publication in the **Federal Register** (5 U.S.C. 553) because the Committee and Board need to have sufficient funds to pay their expenses which are incurred on a continuous basis. The 1994–95 fiscal periods for the programs began on July 1, 1994. The marketing orders require that the rates of assessment for the fiscal periods apply to all assessable onions and filberts/hazelnuts handled during the fiscal periods. In addition, handlers are aware of these actions which were recommended by the Committee and Board and published in the **Federal Register** as interim final rules.

List of Subjects

7 CFR part 958

Marketing agreements, Onions, Reporting and recordkeeping requirements.

7 CFR part 982

Filberts, Hazelnuts, Marketing agreements, Nuts, Reporting and recordkeeping requirements.

For the reasons set forth in the preamble, 7 CFR parts 958 and 982 are amended as follows:

PART 958—ONIONS GROWN IN CERTAIN DESIGNATED COUNTIES IN IDAHO, AND MALHEUR COUNTY, OREGON

Accordingly, the interim rule amending 7 CFR part 958 which was published at 59 FR 24631 on May 12, 1994, is adopted as a final rule without change.

PART 982—FILBERTS/HAZELNUTS GROWN IN OREGON AND WASHINGTON

Accordingly, the interim rule amending 7 CFR part 982 which was published at 59 FR 24632 on May 12, 1994, is adopted as a final rule without change.

Dated: August 8, 1994.

Robert C. Keeney,

Deputy Director, Fruit and Vegetable Division.

[FR Doc. 94–19893 Filed 8–12–94; 8:45 am]

BILLING CODE 3410–02–P

Food Safety and Inspection Service

9 CFR Part 318

[Docket No. 92–029F]

RIN 0583–AB66

Sodium Citrate as a Tripe Denuding Agent

AGENCY: Food Safety and Inspection Service, USDA.

ACTION: Final rule.

SUMMARY: The Food Safety and Inspection Service (FSIS) is amending the Federal meat inspection regulations to permit the use of sodium citrate in solution to denude beef stomachs of mucous membranes (tripe). This regulation makes available to meat processors an additional, alternative tripe-denuding formulation containing sodium citrate as an ingredient. The sodium citrate solution is as effective as existing tripe-denuding agents, but is less objectionable to workers than the agents now in use. The sodium citrate-containing formulation contributes to improved tripe production.

EFFECTIVE DATE: September 14, 1994.

FOR FURTHER INFORMATION CONTACT: Dr. William James, Director, Slaughter Inspection Standards and Procedures Division, Science and Technology, Food Safety and Inspection Service, U.S. Department of Agriculture, Washington, DC 20250–3700, (202) 720–3219.

SUPPLEMENTARY INFORMATION:

Background

Under the Federal Meat Inspection Act (21 U.S.C. 601 *et seq.*), FSIS provides mandatory inspection of meat and meat food products prepared for distribution in commerce. The Act prohibits the addition of any substance to any meat or meat food product that may render the product adulterated (21 U.S.C. 601). Section 318.7(a)(1) of the Federal meat inspection regulations (9 CFR 318.7) prohibits the use of any substance in the preparation of any product unless its use is approved in § 318.7(c)(4) of the Federal meat inspection regulations, which is the chart of substances acceptable for use in the preparation of products, or unless it is approved elsewhere in the regulations or it is approved by the Administrator.

In 1990, Birko Corporation, a manufacturer of processing aids and other direct food ingredients, petitioned the Food and Drug Administration (FDA) and us to approve the use of several compounds, including sodium citrate, for use in denuding tripe. Tripe denudation—the removal of mucous membranes from beef stomachs—is a necessary step in the cleaning and preparation of tripe for use as human food. We reviewed the data and other information submitted by the petitioner and determined that the proposed use of sodium citrate did not result in product adulteration or misbranding.

FDA lists sodium citrate as generally recognized as safe when used in accordance with good manufacturing practice in an amount not in excess of that required to achieve its intended effect (21 CFR 182.1751). In an August 24, 1992, letter to the petitioner, FDA reported this fact and stated that it would have "no objection to [sodium citrate's] addition to the tripe-denuding mixture [contemplated by the petitioner] providing that it is used in accordance with good manufacturing practice [1]." FDA further stipulated that the sodium citrate used be of food-grade quality and that the quantity used not be in excess of the amount reasonably required to accomplish its intended effect.

On January 5, 1994, we published a proposal in the **Federal Register** (59 FR 550–551) to permit the use of sodium citrate, in combination with other approved agents, to denude beef stomachs of mucous membranes, in an amount sufficient to accomplish the intended effect. We received no comments in response to the proposed rule.

Therefore, we are amending § 318.7(c)(4) of the Federal meat inspection regulations to permit the use of sodium citrate as a tripe denuding agent in combination with other approved agents, in an amount sufficient to accomplish the intended effect. Use of sodium citrate for this purpose will be subject to the condition that the substance be removed from the denuded tripe by rinsing with potable water.

Executive Order 12866 and Regulatory Flexibility Act

This final rule has been determined to be not significant and, therefore, has not been reviewed by the Office of Management and Budget.

The Administrator has determined that this final rule will not have a significant impact on a substantial number of small entities, as defined by the Regulatory Flexibility Act (5 U.S.C. 601). This regulation makes available to meat processors an additional, alternative tripe-denuding formulation containing sodium citrate as an ingredient. The sodium citrate formulation could be manufactured and sold in liquid form and used in existing or newly developed tripe denuding equipment. The sodium citrate-containing formulation could be used most efficiently in the new equipment and contribute to improved tripe production. Small establishments will benefit from the use of the sodium citrate product because it provides them a more efficient, less expensive, alternate means of tripe preparation than is currently available.

Executive Order 12778

This final rule was reviewed under Executive Order 12778, Civil Justice Reform. States and local jurisdictions are preempted under the Federal Meat Inspection Act (FMIA) and the Poultry Products Inspection Act (PPIA) from imposing requirements with respect to premises, facilities, and operations of federally inspected meat or poultry products, and any marking, labeling, packaging, or ingredient requirements on federally inspected meat and poultry products that are in addition to, or different than, those imposed under the FMIA and PPIA. States and local jurisdictions may, however, exercise concurrent jurisdiction over meat and poultry products that are outside official establishments for the purpose of preventing the distribution of meat and poultry products that are misbranded or adulterated under the FMIA or PPIA, or in the case of imported articles, which are not at such an establishment, after their entry into the United States. The States may, however, impose more stringent requirements on such State inspected products and establishments.

This final rule is not intended to have retroactive effect, and no applicable administrative procedures must be exhausted before any judicial challenge to the provisions of this rule. However, the applicable administrative procedures specified in 9 CFR 306.5

---

[1] A copy of this letter is available for review in the office of the FSIS Docket Clerk, U.S. Department of Agriculture, Food Safety and Inspection Service, Room 3171–S, Washington, DC 20250–3700.

must be exhausted prior to any judicial challenge to the application of the provisions of this rule, if the challenge involves any decision of an inspector relating to inspection services provided under the FMIA. The applicable administrative procedures specified in 9 CFR part 335 must be exhausted prior to any judicial challenge to the application of the provisions of this rule with respect to labeling decisions.

List of Subjects in 9 CFR Part 318

Meat inspection, Food additives.

For the reasons set out in the preamble, 9 CFR part 318 is amended as follows:

PART 318—ENTRY INTO OFFICIAL ESTABLISHMENTS; REINSPECTION AND PREPARATION OF PRODUCTS

1. The authority citation for part 318 continues to read as follows:

Authority: 7 U.S.C. 450, 1901–1906; 21 U.S.C. 601–695; 7 CFR 2.17, 2.55.

2. Section 318.7(c)(4) is amended by adding to the chart of substances, under the Class of Substance "Denuding agents; may be used in combination. Must be removed from tripe by rinsing with potable water.," the substance sodium citrate in alphabetical order as follows:

§ 318.7 Approval of substances for use in the preparation of products.

* * * * *

(c) * * *

(4) * * *

Class of substance	Substance	Purpose	Products	Amount
* * *	*	*	*	*
Denuding Agents; may be used in combination. Must be removed from tripe by rinsing with potable water.	Sodium Citrate	do	do	Do.
* * *	*	*	*	*

Done at Washington, DC, on August 4, 1994.

Patricia Jensen,

Acting Assistant Secretary, Marketing and Inspection Services.

[FR Doc. 94–19833 Filed 8–12–94; 8:45 am]

BILLING CODE 3410–DM–P

NUCLEAR REGULATORY COMMISSION

10 CFR Parts 19, 20, 35, and 40

RIN 3150–AA38

Standards for Protection Against Radiation; Clarification

AGENCY: Nuclear Regulatory Commission.

ACTION: Final rule; clarification.

SUMMARY: On December 22, 1993, a final rule making a number of conforming amendments to the NRC's standards for protection against radiation was published in the **Federal Register** (58 FR 67657). References to the former standards for protection against radiation were removed from the regulations, and, in that process, certain requirements and provisions not intended to be removed were inadvertently deleted. This final rule reinstates those applicable implementation provisions of the NRC's regulations which were intended to remain in effect or are needed for clarity.

EFFECTIVE DATE: August 15, 1994.

FOR FURTHER INFORMATION CONTACT: Jayne M. McCausland, Office of Nuclear Regulatory Research, U.S. Nuclear Regulatory Commission, Washington, DC 20555, telephone (301) 415–6219.

SUPPLEMENTARY INFORMATION: On May 21, 1991 (56 FR 23360), the Nuclear Regulatory Commission (NRC) published its revised standards for protection against radiation (10 CFR 20.1001–20.2401 and the associated appendices). The revised standards for protection against radiation incorporated scientific information and reflected changes in the basic philosophy of radiation protection that had occurred since the promulgation of the original regulations. The revisions conformed the Commission's regulations to the Presidential Radiation Protection Guidance to Federal Agencies for Occupational Exposure and to recommendations of national and international radiation protection organizations. The revised standards for protection against radiation became effective on June 20, 1991. However, NRC licensees were permitted to defer the mandatory implementation of these regulations until January 1, 1993.

On August 26, 1992 (57 FR 38588), the NRC published a final rule that extended the date by which NRC licensees were required to implement the revised standards for protection against radiation from January 1, 1993, until January 1, 1994. That document also made several conforming amendments to the text of the revised standards for protection against radiation that were necessary to reflect the new mandatory implementation date.

On December 22, 1993 (58 FR 67657), the NRC published a final rule on "removal of expired material." In that final rule, effective on January 1, 1994, a number of provisions were removed or modified to reflect the effective date for NRC's revised standards for radiation protection. Several provisions that were removed or modified by the December 22, 1993, action should not have been removed or modified because they have continuing effect beyond the January 1, 1994, effective date for the revised standards for protection against radiation. The NRC is concerned that some licensees might misinterpret the Commission's intent in some instances because of the removal of these paragraphs and/or references. Accordingly, this final rule restores those provisions of § 20.1008 that were incorrectly removed by the December 22, 1993, rulemaking. These provisions clearly indicate that requirements in effect prior to January 1, 1994, that are cited in license conditions or technical specifications, may have continued applicability. It also corrects minor errors discovered in reviewing the published version of the December 22, 1993, final rule.

Specifically, 10 CFR 19.13 currently provides that, at the request of any worker formerly engaged in licensed activities controlled by the licensee, each licensee will provide to the worker reports of his/her exposures if the worker was required to be monitored under the provisions of § 20.1502. This action clarifies that licensees continue to be responsible for providing worker exposure reports to those workers subject to the monitoring requirements in effect prior to January 1, 1994.[1] This

[1] Previous §§ 20.108 and 20.202 provided personnel monitoring requirements that were in effect prior to January 1, 1994 (see 10 CFR Chapter

Continued

will eliminate possible misinterpretations caused by the deletion of the reference in § 19.13(c) to formerly applicable monitoring requirements found in §§ 20.108 and 20.202 in the December 22, 1993, amendments and will ensure that licensees are aware that they are still responsible for providing workers with records of their occupational exposure in accordance with the monitoring requirements in the appropriate sections contained in the current Part 20 or regulations in effect prior to January 1, 1994.

This action restores portions of § 20.1008, "Implementation," which specify that technical specifications and license conditions that cite regulations in effect prior to January 1, 1994, may, under some conditions, take precedence over new Part 20 provisions. This action facilitates the transition from formerly applicable Part 20 provisions to current Part 20 provisions until technical specification changes, license amendments, or license renewals are effected.

In 10 CFR 35.205 (a), the December 22, 1993, amendment replaced references to §§ 20.103 (Exposure of individuals to concentrations of radioactive materials in air in restricted areas) and 20.106 (Radioactivity in effluents to unrestricted areas) with a reference to § 20.1301 (Dose limits for individual members of the public). This action adds a reference to § 20.1201 (Occupational dose limits for adults) to correspond to the earlier reference to formerly applicable § 20.103. This will ensure that licensees understand that this section covers dose limits for airborne concentrations in restricted areas as well as unrestricted areas.

Also, in paragraph (c) of § 35.205, the December 22, 1993, amendments inadvertently revised a reference to the occupational concentration limits in Appendix B to Part 20 to reference § 20.1301 (i.e., dose limits for individual members of the public). This action corrects the misreference to read § 20.1201 to clarify that occupational dose limits were intended rather than public dose limits.

In 10 CFR 40.34, this action corrects a transposed number which resulted in a reference to units of quantities (§ 20.2101 (a)) rather than the intended reference to occupational dose limits (§ 20.1201 (a)).

These amendments are corrective in nature and restore provisions inadvertently deleted in prior amendments (December 22, 1993; 58 FR 67657). Because the opportunity for public comment was previously provided for the changes that formed the basis for the December 22, 1993, amendments (May 21, 1991; 56 FR 23360 and August 26, 1992; 57 FR 38588), and because the proposed changes are minor corrective amendments, the NRC has determined that good cause exists to dispense with the notice and comment provisions of the Administrative Procedure Act (APA) pursuant to 5 U.S.C. 553(b)(3)(B). For the same reasons, the NRC has determined that good cause exists to waive the 30-day deferred effective date provisions of the APA (5 U.S.C. 553(d)).

Environmental Impact: Categorical Exclusion

The NRC has determined that this rule is the type of action described in categorical exclusion 51.22(c)(2). Therefore, neither an environmental impact statement nor an environmental assessment has been prepared for this final rule.

Paperwork Reduction Act Statement

This final rule does not contain a new or amended information collection requirement subject to the Paperwork Reduction Act of 1980 (44 U.S.C. 3501 et seq.). Existing requirements were approved by the Office of Management and Budget, approval numbers 3150–0044, –0014, –0010, and –0020.

Regulatory Analysis

This final rule is administrative in that it reinstates provisions inadvertently removed from the text of an existing regulation. These amendments will not have a significant impact. Therefore, the NRC has not prepared a separate regulatory analysis for this final rule. The final regulatory analysis for the May 21, 1991, final rule examined the costs and benefits of the alternatives considered by the Commission in developing the revised standards for protection against radiation and is available for inspection in the NRC Public Document Room, 2120 L Street, NW. (Lower Level), Washington, DC.

Backfit Analysis

The NRC has determined that the backfit rule, 10 CFR 50.109, does not apply to this final rule and, therefore, that a backfit analysis is not required for this final rule because these amendments do not involve any provision that would impose backfits as defined in 10 CFR 50.109(a)(1).

List of Subjects

10 CFR Part 19

Criminal penalties, Environmental protection, Nuclear materials, Nuclear power plants and reactors, Occupational safety and health, Radiation protection, Reporting and recordkeeping requirements, Sex discrimination.

10 CFR Part 20

Byproduct material, Criminal penalties, Licensed material, Nuclear materials, Nuclear power plants and reactors, Occupational safety and health, Packaging and containers, Radiation protection, Reporting and recordkeeping requirements, Special nuclear material, Source material, Waste treatment and disposal.

10 CFR Part 35

Byproduct material, Criminal penalties, Drugs, Health facilities, Health professions, Medical devices, Nuclear materials, Occupational safety and health, Radiation protection, Reporting and recordkeeping requirements.

10 CFR Part 40

Criminal penalties, Government contracts, Hazardous materials transportation, Nuclear materials, Reporting and recordkeeping requirements, Scientific equipment, Security measures, Source material, Special nuclear material, Uranium.

PART 19—NOTICES, INSTRUCTIONS, AND REPORTS TO WORKERS: INSPECTION AND INVESTIGATIONS

1. The authority citation for Part 19 continues to read as follows:

Authority: Secs. 53, 63, 81, 103, 104, 161, 186, 68 Stat. 930, 933, 935, 936, 937, 948, 955, as amended, sec. 234, 83 Stat. 444, as amended (42 U.S.C. 2073, 2093, 2111, 2133, 2134, 2201, 2236, 2282); sec. 201, 88 Stat. 1242, as amended (42 U.S.C. 5841); Public Law 95–601, sec. 10, 92 Stat. 2951, as amended by Public Law 102–486, sec. 2902, 106 Stat. 3123 (42 U.S.C. 5851).

2. In § 19.13, paragraph (c) is revised to read as follows:

§ 19.13 Notifications and reports to individuals.

* * * * *

(c)(1) At the request of a worker formerly engaged in licensed activities controlled by the licensee, each licensee shall furnish to the worker a report of the worker's exposure to radiation and/or to radioactive material:

(i) As shown in records maintained by the licensee pursuant to § 20.2106 for each year the worker was required to be

---

1 as codified as of January 1, 1993). In addition, it should be noted that the 1992 version of Chapter 10 of the Code of Federal Regulations incorrectly referenced § 20.107 as a monitoring requirement.

monitored under the provisions of § 20.1502; and

(ii) For each year the worker was required to be monitored under the monitoring requirements in effect prior to January 1, 1994.

(2) This report must be furnished within 30 days from the time the request is made or within 30 days after the exposure of the individual has been determined by the licensee, whichever is later. This report must cover the period of time that the worker's activities involved exposure to radiation from radioactive material licensed by the Commission and must include the dates and locations of licensed activities in which the worker participated during this period.

* * * * *

PART 20—STANDARDS FOR PROTECTION AGAINST RADIATION

3. The authority citation for Part 20 continues to read as follows:

Authority: Secs. 53, 63, 65, 81, 103, 104, 161, 182, 186, 68 Stat. 930, 933, 935, 936, 937, 948, 953, 955, as amended (42 U.S.C. 2073, 2093, 2095, 2111, 2133, 2134, 2201, 2232, 2236), secs. 201, as amended, 202, 206, 88 Stat. 1242, as amended, 1244, 1246 (42 U.S.C. 5841, 5842, 5846).

4. Section 20.1008 is added to read as follows:

§ 20.1008 Implementation.

(a) [Reserved].

(b) The applicable section of §§ 20.1001–20.2402 must be used in lieu of requirements in the standards for protection against radiation in effect prior to January 1, 1994 [1] that are cited in license conditions or technical specifications, except as specified in paragraphs (c), (d), and (e) of this section. If the requirements of this part are more restrictive than the existing license condition, then the licensee shall comply with this part unless exempted by paragraph (d) of this section.

(c) Any existing license condition or technical specification that is more restrictive than a requirement in §§ 20.1001–20.2402 remains in force until there is a technical specification change, license amendment, or license renewal.

(d) If a license condition or technical specification exempted a licensee from a requirement in the standards for protection against radiation in effect prior to January 1, 1994,[1] it continues to exempt a licensee from the corresponding provision of §§ 20.1001–20.2402.

(e) If a license condition cites provisions in requirements in the standards for protection against radiation in effect prior to January 1, 1994 [1] and there are no corresponding provisions in §§ 20.1001–20.2402, then the license condition remains in force until there is a technical specification change, license amendment, or license renewal that modifies or removes this condition.

[1] See §§ 20.1–20.602 codified as of January 1, 1993.

[1] See §§ 20.1–20.602 codified as of January 1, 1993.

PART 35—MEDICAL USE OF BYPRODUCT MATERIAL

5. The authority citation for Part 35 continues to read as follows:

Authority: Secs. 81, 161, 182, 183, 68 Stat. 935, 948, 953, 954, as amended (42 U.S.C. 2111, 2201, 2232, 2233); sec. 201, 88 Stat. 1242, as amended (42 U.S.C. 5841).

6. In § 35.205, paragraphs (a) and (c) are revised to read as follows:

§ 35.205 Control of aerosols and gases.

(a) A licensee that administers radioactive aerosols or gases shall do so in a room with a system that will keep airborne concentrations low enough so as not to exceed the limits prescribed by §§ 20.1201 and 20.1301 of this chapter. The system must either be directly vented to the atmosphere through an air exhaust or provide for collection and decay or disposal of the aerosol or gas in a shielded container.

* * * * *

(c) Before receiving, using, or storing a radioactive gas, the licensee shall calculate the amount of time needed after a spill to reduce the concentration in the room low enough so as not to exceed the limits prescribed by § 20.1201 of this chapter. The calculation must be based on the highest activity of gas handled in a single container, the air volume of the room, and the measured available air exhaust rate.

* * * * *

PART 40—DOMESTIC LICENSING OF SOURCE MATERIAL

7. The authority citation for Part 40 continues to read as follows:

Authority: Sec. 62, 63, 64, 65, 81, 161, 182, 183, 186, 68 Stat. 932, 933, 935, 948, 953, 954, 955, as amended, secs. 11e(2), 83, 84, Public Law 95–604, 92 Stat. 3033, as amended, 3039, sec. 234, 83 Stat. 444, as amended (42 U.S.C. 2014(e)(2), 2092, 2093, 2094, 2095, 2111, 2113, 2114, 2201, 2232, 2233, 2236, 2282); sec. 274, Public Law 86–373, 73 Stat. 688 (42 U.S.C. 2021); secs. 201, as amended, 202, 206, 88 Stat. 1242, as amended, 1244, 1246, (42 U.S.C. 5841, 5842, 5846); sec. 275, 92 Stat. 3021, as amended by Public Law 97–415, 96 Stat. 2067 (42 U.S.C. 2022).

Section 40.7 also issued under Public Law 95–602, sec. 10, 92 Stat. 2951, as amended by Public Law 102–486, sec. 2902, 106 Stat. 3123 (42 U.S.C. 5851). Section 40.31(g) also issued under sec. 122, 68 Stat. 939 (42 U.S.C. 2152). Section 40.46 also issued under sec. 184, 68 Stat. 954, as amended (42 U.S.C. 2234). Section 40.71 also issued under sec. 187, 68 Stat 955 (42 U.S.C. 2237).

§ 40.34 [Amended]

8. In § 40.34, paragraph (a)(2) is amended by revising the reference to "§ 20.2101(a)" to read "§ 20.1201(a)."

Dated at Rockville, Maryland, this 9th day of August 1994.

For the Nuclear Regulatory Commission.

James M. Taylor,

Executive Director for Operations.

[FR Doc. 94–19900 Filed 8–12–94; 8:45 am]

BILLING CODE 7590–01–P

DEPARTMENT OF TRANSPORTATION

Federal Aviation Administration

14 CFR Part 39

[Docket No. 92–ASW–50; Amendment 39–8934; AD 94–12–06]

Airworthiness Directives; Schweizer Aircraft Corporation and Hughes Helicopters, Inc. Model 269A, 269A–1, 269B, 269C, and TH–55A Series Helicopters

AGENCY: Federal Aviation Administration, DOT.

ACTION: Final rule.

SUMMARY: This amendment supersedes an existing airworthiness directive (AD), applicable to Schweizer Aircraft Corporation and Hughes Helicopters, Inc. Model 269A, 269A–1, 269B, 269C, and TH–55A series helicopters, that currently requires repetitive inspections and replacement of certain lower belt drive pulley bearings (pulley bearings). This amendment retains the present AD requirements and adds an alternate pulley bearing to the requirements of the AD. This amendment is prompted by the introduction of an alternate pulley bearing into service by Schweizer Aircraft Corporation. The actions specified by this AD are intended to prevent failure of the pulley bearings, loss of power to the rotor systems, and subsequent loss of control of the helicopter.

DATES: Effective on September 19, 1994

The incorporation by reference of certain publications listed in the

regulations is approved by the Director of the Federal Register as of September 19, 1994.

ADDRESSES: The service information referenced in this AD may be obtained from Schweizer Aircraft Corporation, P.O. Box 147, Elmira, New York 14902. This information may be examined at the Federal Aviation Administration (FAA), Office of the Assistant Chief Counsel, 2601 Meacham Blvd., room 663, Fort Worth, Texas; or at the Office of the Federal Register, 800 North Capitol Street NW., suite 700, Washington, DC.

FOR FURTHER INFORMATION CONTACT: Mr. Raymond Reinhardt, Aerospace Engineer, FAA, New York Aircraft Certification Office, Propulsion Branch, ANE-174, New England Region, 181 South Franklin Avenue, Valley Stream, New York 11581, telephone (516) 791-7421, fax (516) 791-9024.

SUPPLEMENTARY INFORMATION: A proposal to amend part 39 of the Federal Aviation Regulations (14 CFR 39) by superseding AD 80-02-14, Amendment 39-3668 (45 FR 3251, January 17, 1980), which is applicable to Schweizer Aircraft Corporation and Hughes Helicopters, Inc. Model 269A, 269A-1, 269B, 269C, and TH-55A series helicopters, was published in the **Federal Register** on July 2, 1993 (58 FR 35900). That action proposed to continue the present AD requirements for lower belt drive pulley bearings (pulley bearings), part number (P/N) 269A5050-57, and also proposed a one-time inspection of the pulley bearing installation, repetitive inspections of the pulley bearings, and an 1,800 hours' time-in-service life limit for pulley bearings, part number (P/N) 269A5050-80. Pulley bearings, P/N 269A5050-80, are subject to the same requirements as pulley bearings, P/N 269A5050-57.

Interested persons have been afforded an opportunity to participate in the making of this amendment. No comments were received on the proposal or the FAA's determination of the cost to the public. The FAA has determined that air safety and the public interest require the adoption of the rule as proposed, with only editorial changes. The FAA has determined that these changes will neither increase the economic burden on any operator nor increase the scope of the AD.

The FAA estimates that 700 helicopters of U.S. registry will be affected by this AD, that it will take approximately 1.5 work hours per helicopter to accomplish the required actions, and that the average labor rate is $55 per work hour. Required parts, if needed, will cost approximately $635 per helicopter. Based on these figures, the total cost impact of the AD on U.S. operators is estimated to be $168,875 each year assuming 175 helicopters would need new parts each year.

The regulations adopted herein will not have substantial direct effects on the States, on the relationship between the national government and the States, or on the distribution of power and responsibilities among the various levels of government. Therefore, in accordance with Executive Order 12612, it is determined that this final rule does not have sufficient federalism implications to warrant the preparation of a Federalism Assessment.

For the reasons discussed above, I certify that this action (1) is not a "significant regulatory action" under Executive Order 12866; (2) is not a "significant rule" under DOT Regulatory Policies and Procedures (44 FR 11034, February 26, 1979); and (3) will not have a significant economic impact, positive or negative, on a substantial number of small entities under the criteria of the Regulatory Flexibility Act. A final evaluation has been prepared for this action and it is contained in the Rules Docket. A copy of it may be obtained from the Rules Docket at the location provided under the caption **ADDRESSES**.

List of Subjects in 14 CFR Part 39

Air transportation, Aircraft, Aviation safety, Incorporation by reference, Safety.

Adoption of the Amendment

Accordingly, pursuant to the authority delegated to me by the Administrator, the Federal Aviation Administration amends part 39 of the Federal Aviation Regulations (14 CFR part 39) as follows:

PART 39—AIRWORTHINESS DIRECTIVES

1. The authority citation for part 39 continues to read as follows:

Authority: 49 U.S.C. App. 1354(a), 1421 and 1423; 49 U.S.C. 106(g); and 14 CFR 11.89.

§ 39.13 [AMENDED]

2. Section 39.13 is amended by removing Amendment 39-3668, (45 FR 3251, January 17, 1980), and by adding a new airworthiness directive (AD), Amendment 39-8934, to read as follows:

94-12-06 Schweizer Aircraft Corporation and Hughes Helicopters, Inc.: Amendment 39-8934. Docket Number 92-ASW-50. Supersedes AD 80-02-14, Amendment 39-3668.

Applicability: Model 269A, 269A-1, 269B, 269C, and TH-55A helicopters, with lower belt drive pulley bearings, part number (P/N) 269A5050-57 or 269A5050-80, installed, certificated in any category.

Compliance: Required as indicated, unless accomplished previously.

To prevent failure of the lower belt drive pulley bearings (pulley bearings), loss of power to the rotor systems, and subsequent loss of control of the helicopter, accomplish the following:

(a) Within the next 50 hours' time-in-service (TIS) after the effective date of this AD, replace all pulley bearings, P/N 269A5050-57 or 269A5050-80, that have accumulated 1,750 or more hours' TIS on the effective date of this AD. For pulley bearings that have accumulated less than 1,750 hours' TIS on the effective date of this AD, replace these pulley bearings on or prior to attaining 1,800 hours' total TIS. If replaced with pulley bearings, P/N 269A5050-57 or 269A5050-80, the repetitive inspection requirements of paragraph (d) of this AD are applicable.

Note: The following paragraphs of the AD, relative to bearing retention system inspection, cover two systems of retention. At delivery, all Model 269A, 269A-1, 269B, TH-55A, and certain 269C helicopters, serial numbers 1 through 589, were equipped with sheet metal lower bearing straps, P/N 269A5463. Model 269C helicopters, serial numbers 590 and subsequent, were equipped with machined lower bearing caps that are part of a 269A5573-11 "H" frame assembly. Paragraph (b) concerns the sheet metal straps and paragraph (c) concerns the machined caps.

(b) Within the next 50 hours' TIS after the effective date of this AD, on helicopters equipped with sheet metal lower bearing straps, P/N 269A5463—

(1) Inspect the pulley bearings in accordance with paragraphs a. through f. of Part I of Schweizer Aircraft Corporation or Hughes Helicopters, Inc. Service Information Notice (SIN) N-146.2, dated December 7, 1979, and,

(2) Shim bearing straps in accordance with paragraph h.(2) of Part I of SIN N-146.2, dated December 7, 1979.

(c) Within the next 50 hours' TIS after the effective date of this AD, on helicopters equipped with machined lower pulley bearing caps (caps) that are part of a 269A5573-11 "H" frame assembly, inspect caps and frame assembly lower bearing bore for out-of-roundness in accordance with paragraphs l. through p., Part I of SIN N-164, dated December 7, 1979.

(1) If out-of-roundness exceeds 0.001 inch Total Indicator Reading (T.I.R.), reverse the caps and repeat the inspections of paragraph (c) of this AD for both caps.

(2) If out-of-roundness exceeds 0.001 inch T.I.R. after reversing and reinspecting the caps, replace both caps with two lower bearing straps, P/N 269A5463, in accordance with paragraph r. of Part I of SIN N-164, dated December 7, 1979.

(d) Within 300 hours' TIS after accomplishing paragraphs (b) or (c) of this AD, and thereafter at intervals not to exceed 300 hours' TIS from the last inspection, inspect the pulley bearings in accordance

with paragraph a. through e. of Part III of SIN N-164, dated December 7, 1979.

(e) Before returning any helicopter equipped with a replacement "H" frame assembly to service, accomplish the inspections of paragraphs (b) or (c) of this AD as appropriate.

(f) An alternative method of compliance or adjustment of the compliance time that provides an acceptable level of safety may be used when approved by the Manager, New York Aircraft Certification Office, FAA. Operators shall submit their requests through an FAA Principal Maintenance Inspector, who may concur or comment and then send it to the Manager, New York Aircraft Certification Office.

Note: Information concerning the existence of approved alternative methods of compliance with this AD, if any, may be obtained from the New York Aircraft Certification Office.

(g) Special flight permits may be issued in accordance with sections 21.197 and 21.199 of the Federal Aviation Regulations (14 CFR 21.197 and 21.199) to operate the helicopter to a location where the requirements of this AD can be accomplished.

(h) The inspections and replacements shall be done in accordance with Schweizer Aircraft Corporation SIN N-164 and SIN N-146.2, both dated December 7, 1979. This incorporation by reference was approved by the Director of the **Federal Register** in accordance with 5 U.S.C. 552(a) and 1 CFR Part 51. Copies may be obtained from Schweizer Aircraft Corporation, P.O. Box 147, Elmira, New York 14902. Copies may be inspected at the FAA, Office of the Assistant Chief Counsel, 2601 Meacham Blvd., Room 663, Fort Worth, Texas; or at the Office of the **Federal Register**, 800 North Capitol Street NW., suite 700, Washington, DC.

(i) This amendment becomes effective on September 19, 1994.

Issued in Fort Worth, Texas, on June 17, 1994.

Eric Bries,

Acting Manager, Rotorcraft Directorate, Aircraft Certification Service.

[FR Doc. 94-17868 Filed 8-12-94; 8:45 am]

BILLING CODE 4910-13-P

---

14 CFR Part 39

[Docket No. 93-NM-218-AD; Amendment 39-8995; AD 94-16-05]

Airworthiness Directives; Boeing Model 767 Series Airplanes Equipped With Carbon Brakes

AGENCY: Federal Aviation Administration, DOT.

ACTION: Final rule.

SUMMARY: This amendment adopts a new airworthiness directive (AD), applicable to certain Boeing Model 767 series airplanes, that requires repetitive inspections to detect cracking, corrosion, and wear of various components of the main landing gear (MLG) brake assembly, and correction of discrepancies. This amendment is prompted by reports indicating that components in the MLG assembly have been damaged due to the consequences of vibration in the brake assembly. The actions specified by this AD are intended to minimize the exposure of the brake assembly to the consequences of a vibratory condition that could ultimately lead to failure of components of the MLG; such failure could severely affect the braking capability of the airplane while on the ground.

DATES: Effective September 14, 1994.

The incorporation by reference of certain publications listed in the regulations is approved by the Director of the Federal Register as of September 14, 1994.

ADDRESSES: The service information referenced in this AD may be obtained from Boeing Commercial Airplane Group, P.O. Box 3707, Seattle, Washington 98124-2207. This information may be examined at the Federal Aviation Administration (FAA), Transport Airplane Directorate, Rules Docket, 1601 Lind Avenue, SW., Renton, Washington; or at the Office of the Federal Register, 800 North Capitol Street, NW., suite 700, Washington, DC.

FOR FURTHER INFORMATION CONTACT: Kristin Larson, Aerospace Engineer, Systems & Equipment Branch, ANM-130S, FAA, Transport Airplane Directorate, Seattle Aircraft Certification Office, 1601 Lind Avenue, SW., Renton, Washington 98055-4056; telephone (206) 227-1760; fax (206) 227-1181.

SUPPLEMENTARY INFORMATION: A proposal to amend part 39 of the Federal Aviation Regulations (14 CFR part 39) to include an airworthiness directive (AD) that is applicable to certain Boeing Model 767 series airplanes was published in the **Federal Register** on March 15, 1994 (59 FR 11946). That action proposed to require inspections to detect cracking, corrosion, and wear of various components of the main landing gear (MLG) brake assembly, and correction of discrepancies.

Interested persons have been afforded an opportunity to participate in the making of this amendment. Due consideration has been given to the comments received.

One commenter supports the proposal.

Several commenters request that the proposal be withdrawn. These commenters contend that AD 94-03-07, amendment 39-8814 (59 FR 7897, February 17, 1994), adequately addresses the safety concerns related to failures caused by the vibration phenomenon of the brakes. That AD is applicable to the same airplanes that would be affected by the proposal, and requires that operators incorporate modifications and perform several different types of inspections to detect cracking and other damage of various components of the MLG brake assembly. Additionally, one commenter advises that every operating airplane affected by AD 94-03-07 is currently in compliance with that AD and, due to the efforts of the operators of these airplanes, there has been a "dramatic effect" in addressing the known brake failure modes.

The FAA does not concur with the request to withdraw the AD. The issuance of AD 94-03-07 was prompted by incidents of brake failure and by physical evidence, which indicated that certain components in the brake load path are subject to damage or failure due to the vibration phenomenon of the brakes. Such damage or failures can contribute to the overall failure of the braking system. While accomplishment of the requirements of AD 94-03-07 will minimize the likelihood or effect of failures of certain components within the brake system, accomplishment of the repetitive inspection requirements of this new AD will address potential damage that could further aggravate the identified vibration phenomenon. While there have been no in-service incidents of failure of certain of these specific components, the FAA has determined that the potential exists for such failures to occur, due to the configuration of the MLG brake assembly and the continuing occurrences of the vibration phenomenon of the brakes. If the failure of the subject components were to occur, it could further aggravate the vibratory condition and weaken the brake load path, possibly leading to further failures or loss of braking. No evidence has been submitted to the FAA to indicate that this potential for failure does not exist, or to justify that inspection of these components is not necessary. In light of these factors, the FAA has determined that this final rule is both appropriate and warranted.

One commenter states that the proposed inspections to detect corrosion and damage to the brake hardware are currently part of operators' maintenance programs. Prudent operators would be expected to adjust their maintenance programs to reflect the changes in the inspections and inspection intervals recommended by Boeing Service Bulletin 767-32-0128 (which is referenced in the proposal). The commenter contends that the incidents upon which the proposed AD and AD 94-03-07 are based are the result of design defects rather than improper

maintenance; therefore, an operator's maintenance program should not have to be revised via an AD in order to address the safety concern. The commenter suggests that the FAA should not require the operator's maintenance program to be revised unless it can show that the maintenance program is inadequate. In this regard, the commenter requests that the FAA review its justification for the proposed rule to ensure that it is sufficient to satisfy the requirements of part 39 of the Federal Aviation Regulations (FAR) (14 CFR part 39), "Airworthiness Directives."

The FAA concurs with the commenter's observation that the unsafe condition addressed by this AD action is the result of a design deficiency and not a maintenance deficiency; however, the FAA does not concur with the commenter's inference that this AD is not justified. This commenter appears to be confusing the basis for finding of an unsafe condition with the appropriate means of addressing the unsafe condition. While it is true that the unsafe condition is based on a design deficiency of the MLG assembly, there currently is no permanent "design fix" to eliminate the problem. Therefore, although a design fix would be the ultimate intention, the FAA has determined that the accomplishment of the inspection requirements of this AD, in the interim, is necessary in order to minimize the occurrence of brake failures due to the brake vibration phenomenon and to ensure that an acceptable level of safety is maintained. With regard to the commenter's statement concerning maintenance programs, even though a parallel inspection action currently may be part of an operator's maintenance program, this AD serves as the means available to the FAA for mandating the appropriate inspection actions and ensuring their accomplishment at timely intervals by all affected operators.

Further, according to part 39 of the FAR, the issuance of an AD must be based on the finding that an unsafe condition exists or is likely to develop in aircraft of a particular type design. This AD is prompted by what the FAA has determined to be an unsafe condition to which Model 767 series airplanes equipped with carbon brakes are subject. That unsafe condition entails the failure of MLG components and the subsequent loss of braking capability, which is brought about by the effects of a vibration phenomenon that is known to exist in the brake assembly of these airplanes. The FAA also has determined that repetitive inspections of the affected area must be mandated in order to minimize the failure of the components and to ensure that safety is not degraded. The appropriate vehicle for mandating such action to correct an unsafe condition is the airworthiness directive. Accordingly, the issuance of this AD is justified under part 39 of the FAR.

One commenter requests an explanation of why the requirements of AD 94–03–07 are considered interim action. The FAA responds by noting that it considers the requirements of both AD 94–03–07 as well as this new AD to be interim action. The accomplishment of the requirements of these AD's is intended to minimize the occurrence of brake failures due to the brake vibration phenomenon. These actions do not eliminate the vibration phenomenon itself, however, as has been verified by a recent incident that occurred in March 1994. During that incident, an airplane that was in compliance with AD 94–03–07 experienced a rejected takeoff in which there was no detected brake loss, but brake components were found to be fractured or damaged during an inspection performed after the incident occurred. The damage that was sustained as a result of that incident was primarily in components other than those addressed by AD 94–03–07. It is apparent that failure of the brake components due to vibration can still occur. The FAA maintains that design changes are needed that will eliminate or significantly reduce the vibration phenomenon recognized in the Model 767 carbon brake system, or significantly reduce the occurrence of failures in the brake load path. The FAA considers that the actions required by AD 94–03–07 and by this new AD are interim actions until such design changes are developed and available.

Several commenters request that the proposed compliance terms be revised from "hours time-in-service" to "flight cycles." These commenters point out that the procedures specified in the referenced Boeing service bulletin are in terms of flight cycles, not hours. The FAA concurs. The reference to "hours time-in-service" that appeared in the proposal was an error. The wording of the final rule has been corrected to specify "flight cycles". This correction will not impose any additional burden on affected operators; it will relieve operators from having to perform the inspections earlier or more often than is actually necessary.

These same commenters request that the compliance time for the inspections that would be required by paragraph (a) be revised from the proposed 1,500 hours time-in-service to 1,600 flight cycles. The commenters state that AD 94–03–07 requires that the rod linkage be inspected at intervals of 800 flight cycles; therefore, the adoption of a 1,600-flight cycle interval for the proposed inspections would allow some of them to be accomplished concurrently with those of AD 94–03–07. This will simplify scheduling and eliminate duplication of work for affected operators. The FAA concurs. In addition to considering the reasons presented by these commenters, the FAA has reviewed and approved Revision 1 of Boeing Service Bulletin 767–32–0128, dated March 31, 1994. Among other things, this revised version of the service bulletin recommends that inspections of the pins, the brake torque arm bushings, and the brake rod bushings begin within 1,600 flight cycles and be repeated at intervals of 1,600 flight cycles. Paragraph (a) of the final rule has been revised to specify a 1,600-flight cycle inspection interval, and to reference the revised version of the service bulletin as the appropriate source of service information.

Another commenter requests that the inspections of the bulkhead, keeper pin, and brake attach pin, as proposed by paragraph (b), be eliminated. This commenter points out that modification of the brake rod pin assembly and the brake attach pin retainer, which is required by AD 94–03–07, has significantly strengthened the brake load path in this area. There has been no indication that this area continues to be a problem area once the modification is installed. The FAA concurs with the commenter's request to delete the proposed inspections. The requirements of AD 94–03–07 eliminated the cross bolts at the brake rod attach pin, thereby eliminating one of the failure modes in the brake load path that had accounted for a significant number of brake loss incidents. The modification required by AD 94–03–07 improves the brake load path in the brake-to-brake rod attachment area. In light of this, the FAA has determined that the inspections proposed in paragraph (b) of the notice are not necessary, and has deleted them from the final rule. The FAA notes that Part 2 of Revision 1 of Boeing Service Bulletin 767–32–0128 provides instructions for inspecting the modified area for corrosion or damage. Although those inspections may be "value added," the FAA does not consider them necessary to improve the safety of the brake system.

One commenter provides an update on the number of airplanes affected by the proposed AD. The information provided by this commenter indicates that the worldwide number has risen

from 289 airplanes (at the time the proposal was issued) to 308 airplanes; and the U.S.-registered number has risen from 71 airplanes to 77 airplanes. The FAA has revised the economic impact information, below, accordingly.

After careful review of the available data, including the comments noted above, the FAA has determined that air safety and the public interest require the adoption of the rule with the changes previously described. The FAA has determined that these changes will neither increase the economic burden on any operator nor increase the scope of the AD.

There are approximately 308 Model 767 series airplanes of the affected design in the worldwide fleet. The FAA estimates that 77 airplanes of U.S. registry will be affected by this AD, that it will take approximately 10 work hours per airplane to accomplish the required actions, and that the average labor rate is $55 per work hour. Based on these figures, the total cost impact of the AD on U.S. operators is estimated to be $42,350, or $550 per airplane, per inspection cycle.

The total cost impact figure discussed above is based on assumptions that no operator has yet accomplished any of the requirements of this AD action, and that no operator would accomplish those actions in the future if this AD were not adopted.

The regulations adopted herein will not have substantial direct effects on the States, on the relationship between the national government and the States, or on the distribution of power and responsibilities among the various levels of government. Therefore, in accordance with Executive Order 12612, it is determined that this final rule does not have sufficient federalism implications to warrant the preparation of a Federalism Assessment.

For the reasons discussed above, I certify that this action (1) is not a "significant regulatory action" under Executive Order 12866; (2) is not a "significant rule" under DOT Regulatory Policies and Procedures (44 FR 11034, February 26, 1979); and (3) will not have a significant economic impact, positive or negative, on a substantial number of small entities under the criteria of the Regulatory Flexibility Act. A final evaluation has been prepared for this action and it is contained in the Rules Docket. A copy of it may be obtained from the Rules Docket at the location provided under the caption **ADDRESSES.**

List of Subjects in 14 CFR Part 39

Air transportation, Aircraft, Aviation safety, Incorporation by reference, Safety.

Adoption of the Amendment

Accordingly, pursuant to the authority delegated to me by the Administrator, the Federal Aviation Administration amends part 39 of the Federal Aviation Regulations (14 CFR part 39) as follows:

PART 39—AIRWORTHINESS DIRECTIVES

1. The authority citation for part 39 continues to read as follows:

Authority: 49 U.S.C. App. 1354(a), 1421 and 1423; 49 U.S.C. 106(g); and 14 CFR 11.89.

§ 39.13 [Amended]

2. Section 39.13 is amended by adding the following new airworthiness directive:

94-16-05 Boeing: Amendment 39-8995. Docket 93-NM-218-AD.

Applicability: Model 767 series airplanes equipped with carbon brakes, certificated in any category.

Compliance: Required as indicated, unless accomplished previously.

To prevent the failure of components of the main landing gear, which could severely affect the braking capability of the airplane while on the ground, accomplish the following:

(a) Within 1,600 flight cycles after the effective date of this AD, and thereafter at intervals not to exceed 1,600 flight cycles, conduct inspections to detect cracking and corrosion of the pin that attaches the brake rod to the brake housing; to detect cracking of the brake torque arm bushings; and to detect wear of the brake rod bushings; in accordance with Part 1 of Boeing Service Bulletin 767-32-0128, Revision 1, dated March 31, 1994. If any discrepancy is detected in any part, replace or repair the part in accordance with the compliance schedule specified in Figure 1, Figure 2, or Figure 3 of the service bulletin, as applicable.

Note 1: Inspections, replacement, and repairs performed prior to the effective date of this AD in accordance with Boeing Service Bulletin 767-32-0128, dated November 11, 1993, are considered to be in compliance with this paragraph.

(b) An alternative method of compliance or adjustment of the compliance time that provides an acceptable level of safety may be used if approved by the Manager, Seattle Aircraft Certification Office (ACO), FAA, Transport Airplane Directorate. Operators shall submit their requests through an appropriate FAA Principal Maintenance Inspector, who may add comments and then send it to the Manager, Seattle ACO.

Note 2: Information concerning the existence of approved alternative methods of compliance with this AD, if any, may be obtained from the Seattle ACO.

(c) Special flight permits may be issued in accordance with sections 21.197 and 21.199 of the Federal Aviation Regulations (14 CFR 21.197 and 21.199) to operate the airplane to a location where the requirements of this AD can be accomplished.

(d) The actions shall be done in accordance with Boeing Service Bulletin 767-32-0128, Revision 1, dated March 31, 1994. This incorporation by reference was approved by the Director of the Federal Register in accordance with 5 U.S.C. 552(a) and 1 CFR part 51. Copies may be obtained from Boeing Commercial Airplane Group, P.O. Box 3707, Seattle, Washington 98124-2207. Copies may be inspected at the FAA, Transport Airplane Directorate, 1601 Lind Avenue, SW., Renton, Washington; or at the Office of the Federal Register, 800 North Capitol Street, NW., suite 700, Washington, DC.

(e) This amendment becomes effective on September 14, 1994.

Issued in Renton, Washington, on August 2, 1994.

Darrell M. Pederson,

Acting Manager, Transport Airplane Directorate, Aircraft Certification Service.

[FR Doc. 94-19353 Filed 8-12-94; 8:45 am]

BILLING CODE 4910-13-U

---

14 CFR Part 39

[Docket No. 92-NM-237-AD; Amendment 39-8998; AD 94-17-03]

Airworthiness Directives; Boeing Model 767 Series Airplanes Equipped With Rolls-Royce RB211-524 Series Engines

AGENCY: Federal Aviation Administration, DOT.

ACTION: Final rule.

SUMMARY: This amendment adopts a new airworthiness directive (AD), applicable to certain Boeing Model 767 series airplanes, that requires inspections, adjustments, and functional checks of the thrust reverser system; installation of a terminating modification; and repetitive operational checks of the gearbox locks and the air motor brake following accomplishment of the modification. This amendment is prompted by the identification of a modification that ensures that the level of safety inherent in the original type design of the thrust reverser system is further enhanced. The actions specified by this AD are intended to prevent possible discrepancies that exist in the current thrust reverser control system, which could result in an inadvertent deployment of a thrust reverser during flight.

DATES: Effective September 14, 1994.

The incorporation by reference of certain publications, as listed in the regulations, is approved by the Director

of the Federal Register as of September 14, 1994.

The incorporation by reference of Boeing Service Bulletin 767–78–0048, dated August 15, 1991, listed in the regulations was approved previously by the Director of the Federal Register as of October 15, 1991 (56 FR 51638, October 15, 1991).

ADDRESSES: The service information referenced in this AD may be obtained from Boeing Commercial Airplane Group, P.O. Box 3707, Seattle, Washington 98124–2207.

This information may be examined at the Federal Aviation Administration (FAA), Transport Airplane Directorate, Rules Docket, 1601 Lind Avenue, SW., Renton, Washington; or at the Office of the Federal Register, 800 North Capitol Street, NW., suite 700, Washington, DC.

FOR FURTHER INFORMATION CONTACT: Lanny Pinkstaff, Aerospace Engineer, Propulsion Branch, ANM–140S, FAA, Transport Airplane Directorate, Seattle Aircraft Certification Office, 1601 Lind Avenue, SW., Renton, Washington 98055–4056; telephone (206) 227–2684; fax (206) 227–1181.

SUPPLEMENTARY INFORMATION:

A proposal to amend part 39 of the Federal Aviation Regulations (14 CFR part 39) to include an airworthiness directive (AD) that is applicable to certain Boeing Model 767 series airplanes was published in the **Federal Register** on August 6, 1993 (58 FR 42032). That action proposed to supersede AD 91–22–02, Amendment 39–8062 (56 FR 51638, October 15, 1991), to require inspections, adjustments, and functional checks of the thrust reverser system on Model 767 series airplanes equipped with Rolls-Royce RB211–524 or General Electric CF6–80C2 series engines. That action also proposed to require installation of a terminating modification and repetitive operational checks of the gearbox locks and the air motor brake following accomplishment of that modification on Model 767 series airplanes equipped with Rolls- Royce RB211–524 series engines.

Interested persons have been afforded an opportunity to participate in the making of this amendment. Due consideration has been given to the comments received.

One commenter supports the proposed rule.

The Air Transport Association (ATA) of America, on behalf of one of its members, requests that two immediately adopted rules be created from this proposed rule: one for airplanes equipped with Rolls-Royce RB211–524 series engines, and the other for the airplanes equipped with General Electric CF6–80C2 series engines. If either of the two rules should be revised in the future, the superseded rule would only apply to the operators actually affected, and operators having airplanes with the other engine type would not be required to change their AD compliance records.

The FAA concurs that two separate AD's should be created from the proposal. Therefore, this final rule has been revised to require those actions specified in the proposal for Model 767 series airplanes equipped with Rolls-Royce RB211–524 series engines only. Paragraph (a) of this final rule has been revised to specify that accomplishment of the actions required by that paragraph terminates the actions required by paragraph (a) of AD 91–22–02. Subsequently, the FAA may consider superseding AD 91–22–02 to remove the requirements for Model 767 series airplanes equipped with Rolls-Royce RB211–524 series engines from that AD, to specify that those requirements are contained in this AD, and to require accomplishment of a terminating modification for Model 767 series airplanes equipped with General Electric CF6–80C2 series engines (once that modification becomes available).

The economic impact information, below, has also been revised to specify the costs associated with accomplishment of the actions required by this AD for those airplanes equipped with Rolls-Royce RB211–524 series engines only.

Boeing requests that specific references to page numbers and revision dates of the Boeing 767 Airplane Maintenance Manual (AMM) be eliminated from the AD. Boeing recommends that the proposed AD specify only the ATA Chapter-Section-Subject, pageblock, and task title. Boeing explains that the AMM's are customized for each operator to reflect all of the equipment in that operator's fleet. Therefore, the number of pages for any given procedure is variable, depending on the number of different equipment configurations documented in an operator's AMM.

Boeing also indicates that AMM procedures are revised periodically for non-technical reasons. Boeing adds that changes to the structure of the procedures are necessary to accommodate an upgrade of the publishing system that is currently under way, which, in addition to repagination, will necessitate the issuance of revised AMM pages.

Boeing states that the effect of specifying AMM page numbers and revision dates in the AD is that operators may be unable to use the procedure contained in the AMM to perform certain tests required by the AD. Each operator would be required to maintain an obsolete version of the procedure, or to request FAA approval of an alternative method of compliance with the AD that would allow the use of the current version of the AMM.

The FAA concurs partially. In light of the information submitted by the commenter, the FAA agrees that specific AMM page numbers and dates should not be specified in the final rule. However, the FAA does not agree with the commenter's recommendation that the final rule specify the ATA Chapter-Section-Subject, pageblock, and task title. The FAA's objective in proposing periodic operational checks of the gearbox locks and the air motor brake is to ensure the integrity of the locking function. Since the issuance of the proposal and receipt of Boeing's comments to the proposal, Boeing has submitted to the FAA separate procedures for accomplishment of the operational check of the integrity of the gearbox locks and the air motor brake. For clarification purposes, the requirements of paragraph (d) of the proposal have been separated into two paragraphs [(c) and (d)] of the final rule. The AMM references specified in paragraph (c) of the proposal have been removed from the final rule. Paragraph (d) of the final rule specifies that the operational checks are required to be accomplished in accordance with the procedures that appear in Appendix 1 (including Figure 1) of this AD.

Since the issuance of the proposal, the FAA has reviewed and approved Boeing Service Bulletin 767–78–0059, Revision 3, dated January 20, 1994, which adds a note in several locations to specify that whenever a changed or disconnected connector is connected, an inspection of the disconnected electrical connectors to detect bent or pushed-back pins should be performed. This inspection is necessary simply to verify the correct installation of the connectors; the FAA does not consider that this inspection will impose an additional burden on any operator. Additionally, the revised service bulletin references the latest version of a particular wire kit to show changes in wiring information. Paragraph (c) of the final rule has been revised to reflect the latest revision of the service bulletin as an additional source of service information.

It should be noted that Revisions 2 and 3 of Boeing Service Bulletin 767–78–0059 reference Rolls-Royce Service Bulletins RB.211–71–9608, RB.211–71–9600, and RB.211–71–9601, and Eldec

Service Bulletin 8–651–32–01 as additional sources of service information for accomplishment of the locking gearbox installation. However, the Boeing service bulletins do not specify the appropriate revision levels for those Rolls-Royce and Eldec service bulletins. Therefore, the FAA has added "NOTE 1" to paragraph (c) of this AD to specify that the intent of that paragraph is that the appropriate revision levels for the Rolls-Royce and Eldec service bulletins to be used in conjunction with Boeing Service Bulletin 767–78–0059 are as follows: Rolls-Royce Service Bulletin RB.211–71–9608, Revision 1, dated October 2, 1992; Rolls-Royce Service Bulletin RB.211–71–9600, Revision 4, dated February 11, 1994; Rolls-Royce Service Bulletin RB.211–71–9601, Revision 1, dated October 2, 1992; and Eldec Service Bulletin 8–651–32–01, dated January 31, 1992.

After careful review of the available data, including the comments noted above, the FAA has determined that air safety and the public interest require the adoption of the rule with the changes previously described. The FAA has determined that these changes will neither increase the economic burden on any operator nor increase the scope of the AD.

Currently, there are no Model 767 series airplanes equipped with Rolls-Royce RB211–524 series engines on the U.S. Register. However, should an affected airplane be imported and placed on the U.S. Register in the future, it will require approximately 22 work hours to accomplish the inspections, adjustments, and functional checks, 754 work hours to accomplish the modification, and 1 work hour to accomplish the operational checks of the modification, at an average labor rate of $55 per work hour. Required parts will be supplied by the manufacturer at no cost to operators. Based on these figures, the total cost impact for the required actions will be $42,735 per airplane.

The regulations adopted herein will not have substantial direct effects on the States, on the relationship between the national government and the States, or on the distribution of power and responsibilities among the various levels of government. Therefore, in accordance with Executive Order 12612, it is determined that this final rule does not have sufficient federalism implications to warrant the preparation of a Federalism Assessment.

For the reasons discussed above, I certify that this action (1) is not a "significant regulatory action" under Executive Order 12866; (2) is not a "significant rule" under DOT Regulatory Policies and Procedures (44 FR 11034, February 26, 1979); and (3) will not have a significant economic impact, positive or negative, on a substantial number of small entities under the criteria of the Regulatory Flexibility Act. A final evaluation has been prepared for this action and it is contained in the Rules Docket. A copy of it may be obtained from the Rules Docket at the location provided under the caption **ADDRESSES.**

List of Subjects in 14 CFR Part 39

Air transportation, Aircraft, Aviation safety, Incorporation by reference, Safety. Adoption of the Amendment.

Accordingly, pursuant to the authority delegated to me by the Administrator, the Federal Aviation Administration amends part 39 of the Federal Aviation Regulations (14 CFR part 39) as follows:

PART 39—AIRWORTHINESS DIRECTIVES

1. The authority citation for part 39 continues to read as follows:

Authority: 49 U.S.C. App. 1354(a), 1421 and 1423; 49 U.S.C. 106(g); and 14 CFR 11.89.

§ 39.13 [Amended]

2. Section 39.13 is amended by adding the following new airworthiness directive:

94–17–03 BOEING: Amendment 39–8998. Docket 92–NM–237–AD.

Applicability: Model 767 series airplanes equipped with Rolls-Royce RB211–524 series engines, certificated in any category.

Compliance: Required as indicated, unless accomplished previously.

To ensure the integrity of the fail safe features of the thrust reverser system, accomplish the following:

(a) Within 30 days after October 15, 1991 (the effective date of AD 91–22–02, Amendment 39–8062), perform the inspections, adjustments, and functional checks described in Boeing Service Bulletin 767–78–0048, dated August 15, 1991, or Revision 1, dated March 26, 1992. Perform those actions in accordance with procedures described in the service bulletin. After the effective date of this AD, those actions shall be accomplished only in accordance with Revision 1 of the service bulletin. Accomplishment of the actions required by this paragraph terminates the actions required by paragraph (a) of AD 91–22–02, amendment 39–8062.

(1) Except as provided by paragraph (a)(2) of this AD, repeat all inspections and functional checks in accordance with the service bulletin at intervals not to exceed 3,000 flight hours.

(2) Repeat the functional check of the grounding wire for the thrust reverser Selector Sequence Valve (SSV) in accordance with the service bulletin at intervals not to exceed 1,500 flight hours, and whenever maintenance action is taken that would disturb the SSV grounding circuit.

(b) If any of the inspections and/or functional checks required by paragraph (a) of this AD cannot be successfully performed, or if those inspections and/or functional checks result in findings that are unacceptable in accordance with Boeing Service Bulletin 767–78–0048, dated August 15, 1991, or Revision 1, dated March 26, 1992, accomplish paragraphs (b)(1) and (b)(2) of this AD. After the effective date of this AD, the actions required by paragraph (b)(2) of this AD shall be accomplished only in accordance with Boeing Service Bulletin 767–78–0048, Revision 1, dated March 26, 1992.

(1) Prior to further flight, deactivate the associated thrust reverser in accordance with Section 78–31–1 of Boeing Document D630T002, "Boeing 767 Dispatch Deviation Guide," Revision 11, dated March 15, 1993. No more than one thrust reverser on any airplane may be deactivated under the provisions of this paragraph.

(2) Within 10 days after deactivation of any thrust reverser in accordance with this paragraph, the thrust reverser must be repaired in accordance with Boeing Service Bulletin 767–78–0048, dated August 15, 1991, or Revision 1, dated March 26, 1992. Additionally, the inspections and/or functional checks required by paragraph (a) of this AD must be successfully accomplished; once this is accomplished, the thrust reverser must then be reactivated.

(c) Within 3 years after the effective date of this AD, install a second locking gearbox system on the left- and right-hand engine thrust reversers, in accordance with Boeing Service Bulletin 767–78–0059, Revision 2, dated June 10, 1993; or Revision 3, dated January 20, 1994.

Note 1: Revisions 2 and 3 of Boeing Service Bulletin 767–78–0059 reference Rolls-Royce Service Bulletins RB.211–71–9608, RB.211–71–9600, and RB.211–71–9601, and Eldec Service Bulletin 8–651–32–01 as additional sources of service information for accomplishment of the locking gearbox installation. However, the Boeing service bulletins do not specify the appropriate revision levels for those Rolls-Royce and Eldec service bulletins. The appropriate revision levels for the Rolls-Royce and Eldec service bulletins to be used in conjunction with Boeing Service Bulletin 767–78–0059 are as follows: Rolls-Royce Service Bulletin RB.211–71–9608, Revision 1, dated October 2, 1992; Rolls-Royce Service Bulletin RB.211–71–9600, Revision 4, dated February 11, 1994; Rolls-Royce Service Bulletin RB.211–71–9601, Revision 1, dated October 2, 1992; and Eldec Service Bulletin 8–651–32–01, dated January 31, 1992.

(d) Within 3,000 flight hours after accomplishing the modification required by paragraph (c) of this AD, or within 1,000 flight hours after the effective date of this AD, whichever occurs later; and thereafter at intervals not to exceed 3,000 flight hours; perform operational checks of the number 2 and number 3 gearbox locks and of the air motor brake in accordance with Appendix 1 (including Figure 1) of this AD.

(e) Accomplishment of the modification and periodic operational checks required by paragraphs (c) and (d) of this AD constitutes terminating action for the inspections, adjustments, and functional checks required by paragraph (a) of this AD.

(f) An alternative method of compliance or adjustment of the compliance time that provides an acceptable level of safety may be used if approved by the Manager, Seattle Aircraft Certification Office (ACO), FAA, Transport Airplane Directorate. Operators shall submit their requests through an appropriate FAA Principal Maintenance Inspector, who may add comments and then send it to the Manager, Seattle ACO.

Note 2: Information concerning the existence of approved alternative methods of compliance with this AD, if any, may be obtained from the Seattle ACO.

(g) Special flight permits may be issued in accordance with sections 21.197 and 21.199 of the Federal Aviation Regulations (FAR) (14 CFR 21.197 and 21.199) to operate the airplane to a location where the requirements of this AD can be accomplished.

(h) Certain actions shall be done in accordance with Boeing Service Bulletin 767–78–0048, Revision 1, dated March 26, 1992; and Boeing Service Bulletin 767–78–0059, Revision 2, dated June 10, 1993, or Boeing Service Bulletin 767–78–0059, Revision 3, dated January 20, 1994. The incorporation by reference of these documents was approved by the Director of the Federal Register in accordance with 5 U.S.C. 552(a) and 1 CFR part 51. Certain other actions shall be done in accordance with Boeing Service Bulletin 767–78–0048, dated August 15, 1991. The incorporation by reference of that document was approved previously by the Director of the Federal Register in accordance with 5 U.S.C. 552(a) and 1 CFR part 51 as of October 15, 1991 (56 FR 51638). Copies may be obtained from Boeing Commercial Airplane Group, P.O. Box 3707, Seattle, Washington 98124–2207. Copies may be inspected at the FAA, Transport Airplane Directorate, 1601 Lind Avenue, SW., Renton, Washington; or at the Office of the Federal Register, 800 North Capitol Street, NW., suite 700, Washington, DC.

(i) This amendment becomes effective on September 14, 1994.

Appendix 1

1. Gearbox Lock and Air Motor Brake Test

A. General

(1) To do the test of the gearbox Locks and air motor brake, you must do the steps that follow:

(a) Do the deactivation procedure of the thrust reverser system.

(b) Do the test of the air motor brake.

(c) Do the test of the gearbox locks.

(d) Do the activation procedure of the thrust reverser system.

B. Equipment

(1) CP30784—INA Access Platform, Rolls-Royce

(2) CP30769—Protection Pads, Rolls-Royce

(3) CP30785—Access Stools, Rolls-Royce

(4) UT1293/1—Load Tool, Rolls-Royce (2 required)

C. Procedure (Fig. 1)

WARNING: DO THE DEACTIVATION PROCEDURE OF THE THRUST REVERSER SYSTEM, WHICH MUST INCLUDE THE INSTALLATION OF LOCK BARS (OR BLOCKERS), TO PREVENT THE ACCIDENTAL OPERATION OF THE THRUST REVERSER. THE ACCIDENTAL OPERATION OF THE THRUST REVERSER COULD CAUSE INJURY TO PERSONS AND DAMAGE TO EQUIPMENT.

(1) Do the deactivation procedure of the thrust reverser in the forward thrust position for ground maintenance.

(2) Use of 0.25 inch (6.4 mm) square drive to turn the manual lock release screw to release the No. 2 and No. 3 gearbox locks.

Note: It is not always easy to turn the manual lock release screws. This is because of a preload in the system. To release the preload, lightly turn the manual cycle and lockout shafts in the stow direction.

(a) Make sure the lock indicators are extended at gearboxes No. 2 and No. 3.

(3) Do a test of the air motor brake:

(a) IF YOU USE THE LOAD TOOLS;

Try to move the translating cowl in the extend direction as follows:

(1) Remove the lock bars that you installed in the deactivation procedure.

(2) Install the load tools through the cutouts and into the No. 2 and No. 3 gearboxes.

(3) Attach the torque wrenches to the load tools.

(4) Try to move the translating cowl in the extend direction.

(b) IF YOU DO NOT USE THE LOAD TOOLS;

Try to move the translating cowl in the extends direction as follows:

(1) Remove the lock bars that you installed in the deactivation procedure.

(2) Put the 0.25 inch (6.4 mm) square drive extensions into the manual cycle and lockout shaft at the No. 2 and No. 3 gearboxes.

(a) attach the standard drive tools.

(3) Try to move the translating cowl in the extend direction.

(c) If the translating cowl moves, replace the air motor and shutoff valve.

(4) Do a test of the gearbox locks:

Note: The steps that follow are for the No. 3 gearbox. Then do these steps again for the No. 2 gearbox.

(a) Install the lock bars in the manual cycle and lockout shafts at the No. 2 and No. 3 gearboxes.

(b) Install the INA access platform in the exhaust mixer duct.

(c) Install the protection pads and the access stools.

(d) Release the air motor brake:

(1) Open the air motor access and pressure relief panel.

(2) Pull the air motor brake release handle forward and turn it counterclockwise to lock the handle in its position.

(e) Turn the manual lock release screw clockwise to engage the No. 3 gearbox lock.

(1) Make sure that the lock indicator is retracted (under the surface) at gearbox No. 3.

(f) Make sure the No. 2 gearbox lock is released.

(1) Make sure the lock indicator is extended at gearbox No. 2.

(g) IF YOU USE THE LOAD TOOLS;

Do a check of the lock dogs as follows:

(1) Remove the lock bars from the No. 2 and No. 3 gearboxes.

(2) Install the load tool through the cutout and into the No. 3 gearbox.

(3) Attach the torque wrench to the load tool.

CAUTION: DO NOT APPLY A TORQUE LOAD OF MORE THAN 30 POUNDS-INCHES (3.4 NEWTON-METERS) TO MANUAL CYCLE AND LOCKOUT SHAFT. A LARGER TORQUE LOAD CAN CAUSE DAMAGE TO THE MECHANISM.

(4) Apply a torque counterclockwise through the manual wind position of the No. 3 gearbox.

(a) If the translating cowl does not move, the lock bar touched one of the two lock dogs.

(b) If the translating cowl moved, lock the thrust reverser until the No. 3 gearbox is replaced.

(5) Turn the manual lock release screw counterclockwise to release the gearbox lock.

(a) Make sure that the indication rod comes out of the No. 3 gearbox.

(6) Turn the manual cycle and lockout shaft counterclockwise a ¼ of a turn.

(7) Turn the manual lock release screw clockwise to engage the No. 3 gearbox lock.

(a) Make sure that the indication rod is fully retracted (under the surface).

CAUTION: DO NOT APPLY A TORQUE LOAD OF MORE THAN 30 POUND-INCHES (3.4 NEWTON-METERS) TO THE MANUAL CYCLE AND LOCKOUT SHAFT. A GREATER TORQUE LOAD CAN CAUSE DAMAGE TO THE MECHANISM.

(8) Apply a torque counterclockwise through the manual wind position of the No. 3 gearbox.

(a) If the manual cycle and lockout shaft can not be turned more than approximately ¼ turn, the second lock dog is serviceable.

(b) If the manual cycle and lockout shaft can be turned more than approximately ¼ turn, the second lock dog is unserviceable. Lock the thrust reverser until the No. 3 gearbox is replaced.

Note: The two lock dogs are found ½ turn apart when you use the manual cycle and lockout shaft. It necessary, do the check again to make sure that the lock dogs are serviceable.

(9) Do the procedure given above for the No. 2 gearbox lock.

(h) IF YOU DO NOT USE THE LOAD TOOLS; Do a check of the lock dogs as follows:

(1) Remove the lock bars from the No. 2 and No. 3 gearboxes.

(2) Put the 0.25 inch (6.4 mm) square drive extensions into the manual cycle and lockout shaft at the No. 2 and No. 3 gearboxes.

(a) Attach the standard drive tools.

CAUTION: DO NOT APPLY A TORQUE LOAD OF MORE THAN 30 POUND-INCHES (3.4 NEWTON-METERS) TO THE MANUAL CYCLE AND LOCKOUT SHAFT. A LARGER TORQUE LOAD CAN CAUSE DAMAGE TO THE MECHANISM.

(3) Apply a torque counterclockwise through the manual wind position of the No. 3 gearbox.

(a) If the translating cowl does not move, the lock bar touched one of the two lock dogs.

(b) If the translating cowl moved, lock the thrust reverser until the No. 3 gearbox is replaced.

(4) Turn the manual lock release screw counterclockwise to release the gearbox lock.

(a) Make sure that the indication rod comes out of the No. 3 gearbox.

(5) Turn the manual cycle and lockout shaft counterclockwise a ¼ of a turn.

(6) Turn the manual lock release screw clockwise to engage the No. 3 gearbox lock.

(a) Make sure that the indication rod is fully retracted (under the surface).

CAUTION: DO NOT APPLY A TORQUE LOAD OF MORE THAN 30 POUND-INCHES (3.4 NEWTON-METERS) TO THE MANUAL CYCLE AND LOCKOUT SHAFT. A GREATER TORQUE LOAD CAN CAUSE DAMAGE TO THE MECHANISM.

(7) Apply a torque counterclockwise through the manual wind position of the No. 3 gearbox.

(a) If the manual cycle and lockout shaft can not be turned more than approximately ¼ turn, the second lock dog is serviceable.

(b) If the manual cycle and lockout shaft can be turned more than approximately ¼ turn, the second lock dog is unserviceable. Lock the thrust reverser until the No. 3 gearbox is replaced.

Note: The two lock dogs are found ½ turn apart when you use the manual cycle and lockout shaft. If necessary, do the check again to make sure that the lock dogs are serviceable.

(8) Do the procedure given above for the No. 2 gearbox lock.

(5) Install the lock bars in the manual cycle and lockout shafts at the No. 2 and No. 3 gearboxes.

(6) Apply the air motor manual brake:

(a) Turn the air motor brake release handle clockwise and then release.

(b) Close the air motor access and pressure relief panel.

(7) Make sure the No. 2 and No. 3 gearbox locks are released.

(a) Make sure the lock indicator rods are extended at the No. 2 and No. 3 gearboxes.

(8) IF YOU USE THE LOAD TOOLS;

Try to move the translating cowl in the extend direction as follows:

(a) Remove the lock bars from the No. 2 and No. 3 gearboxes.

(b) Install the load tools through the cutouts and into the No. 2 and No. 3 gearboxes.

(c) Attach the torque wrenches to the load tools.

(d) Try to move the translating cowl in the extend direction.

(9) IF YOU DO NOT USE THE LOAD TOOLS;

Try to move the translating cowl in the extend direction as follows:

(a) Remove the lock bars from the No. 2 and No. 3 gearboxes.

(b) Put the 0.25 inch (6.4 mm) square drive extensions into the manual cycle and lockout shaft at the No. 2 and No. 3 gearboxes.

(1) Attach the standard drive tools.

(c) Try to move the translating cowl in the extend direction.

(10) If the translating cowl moves, do the full test again.

(a) If the translating sleeve moves again, lock the thrust reverser until you can replace the two locking gearboxes and the air motor and shutoff valve.

(11) Remove the access tools and protection pads.

(12) Remove the INA access platform from the exhaust mixer duct.

(13) Do the activation procedure of the thrust reverser system.

(14) Do the functional test of the thrust reverser system.

BILLING CODE 4910–13–M

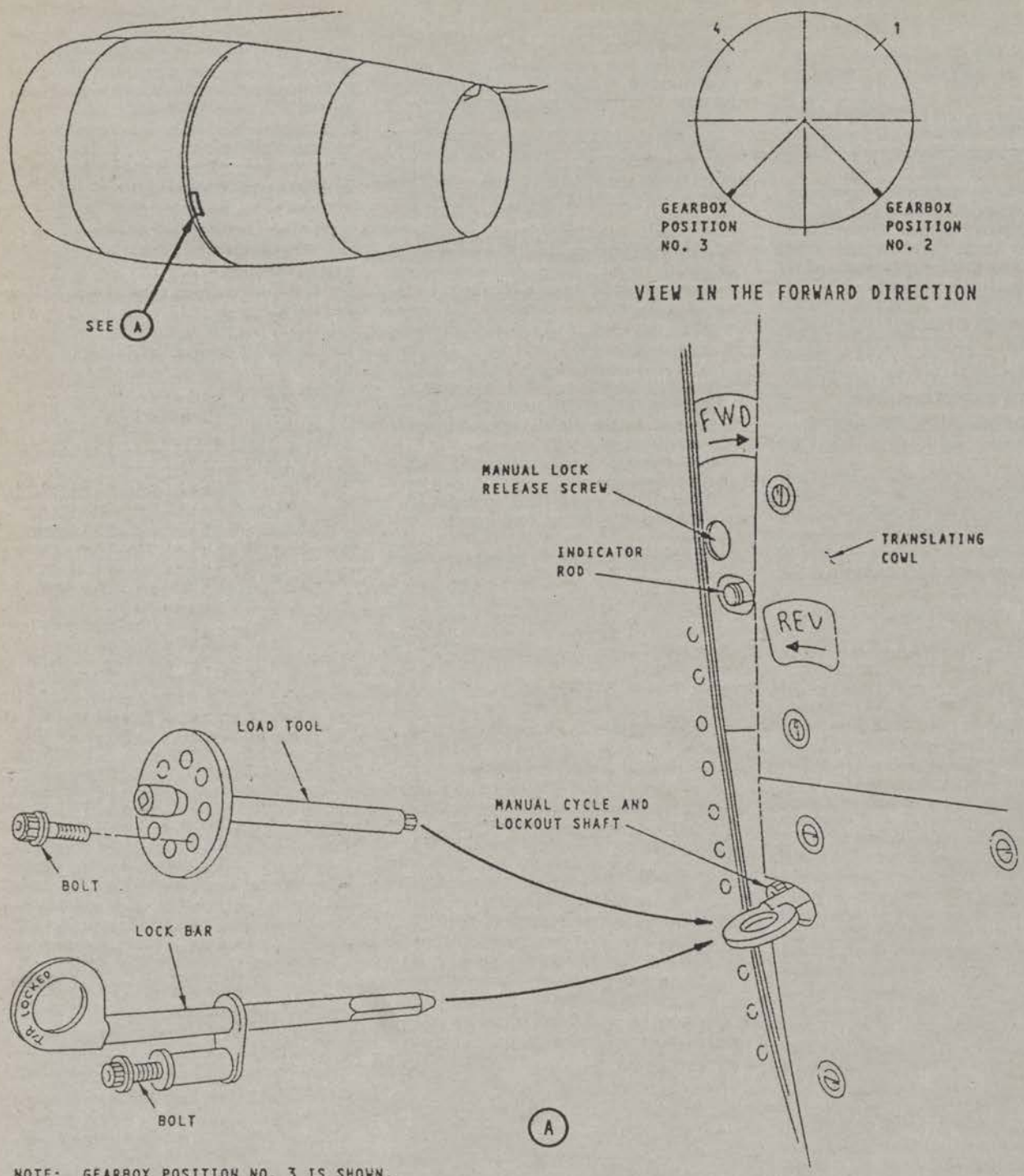

NOTE: GEARBOX POSITION NO. 3 IS SHOWN.
GEARBOX POSITION NO. 2 IS THE SAME.

Lock Bar/Load Tool Installation and Gearbox Manual Lock Release
Figure 1

BILLING CODE 4910–13–C

Issued in Renton, Washington, on August 4, 1994.

James V. Devany,

Acting Manager, Transport Airplane Directorate, Aircraft Certification Service.

[FR Doc. 94–19481 Filed 8–12–94; 8:45 am]

BILLING CODE 4910–13–U

---

14 CFR Part 39

[Docket No. 93–NM–204–AD; Amendment 39–8996; AD 94–17–01]

Airworthiness Directives; Boeing Model 747 Series Airplanes

AGENCY: Federal Aviation Administration, DoT.

ACTION: Final rule.

SUMMARY: This amendment adopts a new airworthiness directive (AD), applicable to certain Boeing Model 747 series airplanes, that requires inspections to detect cracking in the upper row of fasteners in the lower lobe of the fuselage skin lap joints, and repair, if necessary. This amendment is prompted by reports of incidents involving fatigue cracking and corrosion in transport category airplanes that are approaching or have exceeded their design life goal. The actions specified by this AD are intended to prevent separation of the fuselage skin and rapid loss of pressure in the airplane. This AD also relates to the recommendations of the Airworthiness Assurance Working Group assigned to review Model 747 series airplanes, which indicate that, to assure long term continued operational safety, various structural inspections should be accomplished.

DATES: Effective September 14, 1994.

The incorporation by reference of certain publications listed in the regulations is approved by the Director of the Federal Register as of September 14, 1994.

ADDRESSES: The service information referenced in this AD may be obtained from Boeing Commercial Airplane Group, P.O. Box 3707, Seattle, Washington 98124–2207. This information may be examined at the Federal Aviation Administration (FAA), Transport Airplane Directorate, Rules Docket, 1601 Lind Avenue, SW., Renton, Washington; or at the Office of the Federal Register, 800 North Capitol Street, NW., suite 700, Washington, DC.

FOR FURTHER INFORMATION CONTACT: Steven C. Fox, Aerospace Engineer, Airframe Branch, ANM–120S, FAA, Transport Airplane Directorate, Seattle Aircraft Certification Office, 1601 Lind Avenue, SW., Renton, Washington 98055–4056; telephone (206) 227–2777; fax (206) 227–1181.

SUPPLEMENTARY INFORMATION: A proposal to amend part 39 of the Federal Aviation Regulations (14 CFR part 39) to include an airworthiness directive (AD) that is applicable to certain Boeing Model 747 series airplanes was published in the **Federal Register** on March 14, 1994 (59 FR 11733). That action proposed to require repetitive external high frequency eddy current inspections (HFEC) to detect cracking in the upper row of fasteners in the lower lobe of the fuselage skin lap joints, and repair, if necessary.

Interested persons have been afforded an opportunity to participate in the making of this amendment. Due consideration has been given to the comments received.

One commenter requests that the requirements of the proposal be revised to coincide with the actions specified in the service bulletin that is referenced in the proposal as the appropriate source of service information. The commenter states that Boeing Service Bulletin 747–53A2267, Revision 3, dated March 26, 1992, excludes airplanes on which lap joints are thicker than 0.071 inch. The FAA does not concur. The FAA finds that the requirements of the AD and the actions specified in Revision 3 of the service bulletin include inspection of areas at the upper row of fasteners in the lap joint on which the thickness of the skin is 0.090 inch or less (where protruding head fasteners are required). As such, airplanes on which the skin of the lap joints is thicker than 0.071 inch are not exempt from the requirements of the AD or the actions specified in the referenced service bulletin.

One commenter questions the justification for including the airplane having line position 1 in the applicability of the proposal since it is not included in the effectivity of Boeing Service Bulletin 747–53A2267, Revision 3, dated March 26, 1992, which is referenced in the proposal as the appropriate source of service information. From this comment, the FAA infers that the commenter requests that this airplane be deleted from the applicability of the proposal. The FAA does not concur. The FAA intentionally included airplane having line position 1 in the applicability of the rule since it, too, is subject to the same unsafe condition as those airplanes listed in the referenced service bulletin. Therefore, no change to the final rule is necessary.

One commenter requests that the proposal be revised to include specific procedures to accomplish the inspection required by paragraph (a) for airplanes that have been modified to install a main deck side cargo door (MDSCD) in accordance with a supplemental type certificate (STC). The commenter states that, as a result of the STC modification, the MDSCD doublers cover the lap joints. The FAA does not concur. The FAA's intent is not to address in this rule every conceivable airplane configuration for every operator. Consequently, paragraph (d) of this AD provides for FAA approval of alternative methods of compliance to address unique circumstances. Until such time that the FAA approves of such alternative methods of compliance, operators are required to remove the doublers that cover the lap joints to accomplish the required inspection. Therefore, no change to the final rule is necessary.

One commenter requests correction of typographical errors in the applicability statements of proposed paragraphs (a)(2) and (a)(3). The commenter notes that the correct date for the original issue of Boeing Service Bulletin 747–53A2267 is March 28, 1986, rather than March 8, 1986, as erroneously referenced in paragraph (a)(2) of the proposal. This commenter also points out that the optional modification referenced in the applicability statement of proposed paragraph (a)(3) is in error. The optional modification was not introduced until Revision 2 of the service bulletin; therefore, the reference to the original issue and Revision 1 of the service bulletin in proposed paragraph (a)(3) is erroneous. The FAA concurs. Paragraphs (a)(2) and (a)(3) of the final rule have been revised accordingly.

One commenter requests clarification of the requirement in proposed paragraph (c) to inspect following repair of the lap joint in accordance with the 747 Structural Repair Manual (SRM) since the SRM specifies various repairs depending upon the extent of damage to the lap joint. The FAA concurs that clarification is warranted. The FAA finds that if the damage to the lap joint is such that the repair specified in the SRM includes removing the lap joint and the upper row of countersunk fasteners, then the inspection required by paragraph (a) of the final rule does not have to be repeated following such repairs. Paragraph (c) of the final rule has been revised accordingly.

One commenter requests that detailed visual inspections of the lap joints to detect corrosion be included in the proposal, in light of the consequences of crack propagation due to corrosion in lap joints. The commenter notes that these inspections are specified in Boeing Service Bulletin 747–53A2267, which is referenced in the proposal as the appropriate source of service information. The FAA concurs, in part. The FAA acknowledges the criticality of

inspecting to detect corrosion. However, as stated in the proposal, these inspections are currently required by AD 90–25–05, Amendment 39–6790 (55 FR 49268, November 27, 1990), which requires inspections to detect fatigue cracking due to corrosion. Therefore, no change to the final rule is necessary.

Another commenter, a non-U.S. operator, requests that the proposed rule be revised to include a provision specifying that pressurization cycles of 2.0 psi or less need not be counted as a flight cycle when determining the number of flight cycles relative to the proposed compliance thresholds.

The FAA does not concur. The FAA considers it inappropriate to include various provisions in an AD applicable to a single operator's unique use of an affected airplane. Paragraph (d) of this AD provides for the approval of alternative methods of compliance to address these types of unique circumstances. Further, this commenter does not compile data for each of its airplanes so that an individual airplane's pressurization cycles could be determined; instead, it uses a fleet average to calculate the equivalent number of pressurization cycles. The FAA does not consider it appropriate to use approximations for determining compliance with this AD.

After careful review of the available data, including the comments noted above, the FAA has determined that air safety and the public interest require the adoption of the rule with the changes previously described. The FAA has determined that these changes will neither increase the economic burden on any operator nor increase the scope of the AD.

There are approximately 200 Model 747 series airplanes of the affected design in the worldwide fleet. The FAA estimates that 118 airplanes of U.S. registry will be affected by this AD, that it will take approximately 124 work hours per airplane to accomplish the required actions, and that the average labor rate is $55 per work hour. Based on these figures, the total cost impact of the AD on U.S. operators is estimated to be $804,760, or $6,820 per airplane.

The total cost impact figure discussed above is based on assumptions that no operator has yet accomplished any of the requirements of this AD action, and that no operator would accomplish those actions in the future if this AD were not adopted.

The FAA recognizes that the required inspections will require a large number of work hours to accomplish. However, the compliance times specified in paragraph (a) of this AD should allow ample time for the inspections to be accomplished coincidentally with scheduled major airplane inspection and maintenance activities, thereby minimizing the costs associated with special airplane scheduling.

The regulations adopted herein will not have substantial direct effects on the States, on the relationship between the national government and the States, or on the distribution of power and responsibilities among the various levels of government. Therefore, in accordance with Executive Order 12612, it is determined that this final rule does not have sufficient federalism implications to warrant the preparation of a Federalism Assessment.

For the reasons discussed above, I certify that this action (1) is not a "significant regulatory action" under Executive Order 12866; (2) is not a "significant rule" under DOT Regulatory Policies and Procedures (44 FR 11034, February 26, 1979); and (3) will not have a significant economic impact, positive or negative, on a substantial number of small entities under the criteria of the Regulatory Flexibility Act. A final evaluation has been prepared for this action and it is contained in the Rules Docket. A copy of it may be obtained from the Rules Docket at the location provided under the caption **ADDRESSES**.

List of Subjects in 14 CFR Part 39

Air transportation, Aircraft, Aviation safety, Incorporation by reference, Safety. Adoption of the Amendment.

Accordingly, pursuant to the authority delegated to me by the Administrator, the Federal Aviation Administration amends part 39 of the Federal Aviation Regulations (14 CFR part 39) as follows:

PART 39—AIRWORTHINESS DIRECTIVES

1. The authority citation for part 39 continues to read as follows:

Authority: 49 U.S.C. App. 1354(a), 1421 and 1423; 49 U.S.C. 106(g); and 14 CFR 11.89.

§ 39.13 [Amended]

2. Section 39.13 is amended by adding the following new airworthiness directive:

94–17–01 Boeing: Amendment 39–8996. Docket 93–NM–204–AD.

Applicability: Model 747 series airplanes having line positions 1 through 200 inclusive, certificated in any category.

Compliance: Required as indicated, unless accomplished previously.

To prevent separation of fuselage skin and rapid loss of pressure in the airplane, accomplish the following:

(a) Perform an external high frequency eddy current inspection to detect cracks in the upper row of fasteners in the modified lap joints in accordance with Boeing Service Bulletin 747–53A2267, Revision 3, dated March 26, 1992, at the time specified in paragraph (a)(1) or (a)(2) or (a)(3) of this AD, as applicable.

(1) For airplanes on which the full modification required by AD 90–06–06, Amendment 39–6490, has been accomplished in accordance with Revision 2 of Boeing Service Bulletin 747–53A2267, dated March 29, 1990, or Revision 3, dated March 26, 1992: Prior to the accumulation of 10,000 flight cycles after accomplishment of the full modification.

(2) For airplanes on which the full modification required by AD 90–06–06, Amendment 39–6490, has been accomplished in accordance with Boeing Service Bulletin 747–53A2267, dated March 28, 1986, or Revision 1, dated September 25, 1986: Prior to the accumulation of 7,000 flight cycles after accomplishment of the full modification.

(3) For airplanes on which the optional modification has been accomplished in accordance with Boeing Service Bulletin 747–53A2267, Revision 2, dated March 29, 1990; or Revision 3, dated March 26, 1992: Prior to the accumulation of 7,000 flight cycles after accomplishment of the optional modification.

(b) If no cracking is detected, repeat the inspection required by paragraph (a) of this AD thereafter at intervals not to exceed 3,000 flight cycles.

(c) If any cracking is detected, prior to further flight, repair in accordance with the Section 53–30–03 of the 747 Structural Repair Manual (SRM), and repeat the inspections required by paragraph (a) of this AD.

(1) If the repair specified in the 747 SRM does not include removing the lap joint and the upper row of countersunk fasteners, thereafter at intervals not to exceed 3,000 flight cycles.

(2) If the repair specified in the 747 SRM includes removing the lap joint and the upper row of countersunk fasteners, such repair constitutes terminating action for the inspection requirements of this AD.

(d) An alternative method of compliance or adjustment of the compliance time that provides an acceptable level of safety may be used if approved by the Manager, Seattle Aircraft Certification Office (ACO), FAA Transport Airplane Directorate. Operators shall submit their requests through an appropriate FAA Principal Maintenance Inspector, who may add comments and then send it to the Manager, Seattle ACO.

Note: Information concerning the existence of approved alternative methods of compliance with this AD, if any, may be obtained from the Seattle ACO.

(e) Special flight permits may be issued in accordance with sections 21.197 and 21.199 of the Federal Aviation Regulations (14 CFR 21.197 and 21.199) to operate the airplane to a location where the requirements of this AD can be accomplished.

(f) The inspections shall be done in accordance with Boeing Service Bulletin

747-53A2267, Revision 3, dated March 26, 1992. This incorporation by reference was approved by the Director of the Federal Register in accordance with 5 U.S.C. 552(a) and 1 CFR part 51. Copies may be obtained from Boeing Commercial Airplane Group, P.O. Box 3707, Seattle, Washington 98124-2207. Copies may be inspected at the FAA, Transport Airplane Directorate, 1601 Lind Avenue, SW., Renton, Washington; or at the Office of the Federal Register, 800 North Capitol Street, NW., suite 700, Washington, DC.

(g) This amendment becomes effective on September 14, 1994.

Issued in Renton, Washington, on August 4, 1994.

James V. Devany,

Acting Manager, Transport Airplane Directorate, Aircraft Certification Service.

[FR Doc. 94-19480 Filed 8-12-94; 8:45 am]

BILLING CODE 4910-13-U

---

14 CFR Part 39

[Docket No. 91-ANE-51; Amendment 39-8987; AD 94-15-16]

Airworthiness Directives; Pratt & Whitney JT9D Series Turbofan Engines

AGENCY: Federal Aviation Administration, DOT.

ACTION: Final rule.

SUMMARY: This amendment adopts a new airworthiness directive (AD), applicable to Pratt & Whitney JT9D series turbofan engines, that requires a one-time modification and overhaul of engine control system accessories. This amendment is prompted by multiple engine surge and power loss events caused by deterioration of internal components of engine control system accessories. The actions specified by this AD are intended to prevent the loss of engine compressor surge margin caused by the deterioration of engine control system accessories, resulting in an engine surge, and subsequent power loss or inflight engine shufdown.

DATES: Effective October 14, 1994.

The incorporation by reference of certain publications listed in the regulations is approved by the Director of the Federal Register as of October 14, 1994.

ADDRESSES: The service information referenced in this AD may be obtained from Pratt & Whitney, Publications Department, 400 Main Street, East Hartford, CT 06108. This information may be examined at the Federal Aviation Administration (FAA), New England Region, Office of the Assistant Chief Counsel, 12 New England Executive Park, Burlington, MA; or at the Office of the Federal Register, 800 North Capitol Street, NW., suite 700, Washington, DC.

FOR FURTHER INFORMATION CONTACT: Daniel Kerman, Aerospace Engineer, Engine Certification Office, FAA, Engine and Propeller Directorate, 12 New England Executive Park, Burlington, MA 01803-5299; telephone (617) 238-7130; fax (617) 238-7199.

SUPPLEMENTARY INFORMATION: A proposal to amend part 39 of the Federal Aviation Regulations (14 CFR part 39) to include an airworthiness directive (AD) that is applicable to Pratt & Whitney (PW) JT9D series turbofan engines was published in the **Federal Register** on January 5, 1993 (58 FR 275). That action proposed to require a one-time modification and overhaul of engine control system accessories to prevent loss of engine compressor surge margin caused by the deterioration of engine control system accessories, resulting in an engine surge, and subsequent power loss or inflight engine shutdown.

Interested persons have been afforded an opportunity to participate in the making of this amendment. Due consideration has been given to the comments received.

Several commenters question the need for the Federal Aviation Administration (FAA) to issue an AD to improve the inflight engine shutdown rate. The commenters cite section 39.1 of the Federal Aviation Regulations (14 CFR 39.1) which requires that an AD be issued when an unsafe condition exists in a product and is likely to exist or develop in other products of the same design. The commenters further state that an inflight engine shutdown on a multi-engine aircraft is not a safety event but an operational restriction. The FAA does not concur. A decrease in engine component reliability can pose a potentially unsafe condition due to excessive inflight engine shutdown or surge rates. After a review of the inflight engine shutdown and surge rates, the FAA determined that certain populations of engines had a heightened susceptibility to engine surge, but in many instances engine surge events did not result in an actual inflight engine shutdown. For this reason it is not sufficient to consider only inflight engine shutdown rates. Other measures of overall engine reliability were also considered, including component mean time between failure and unscheduled removal rates. The requirements of this AD will help preclude an incident where multiple engines on the same aircraft surge, with or without a resultant inflight engine shutdown. The FAA has received 12 reports of multiple engine surge events occurring during critical phases of flight such as takeoff and climb-out; therefore, the FAA has determined that an unsafe condition exists in a product that is likely to exist or develop in other products of the same type design and, accordingly, AD action is warranted.

One commenter states that the AD should be revised to require incorporation of its provisions into an operator's existing FAA-approved maintenance program, and that once incorporated into the program, the AD would no longer be applicable. In addition, the commenter suggests that the FAA Flight Standards District Offices should administer the maintenance program. The FAA does not concur. This AD will restore engine component reliability through incorporation of certain design upgrades. These upgrades are necessary due to design deficiencies of these components. This AD will not require periodic maintenance, but only a one-time incorporation of certain service bulletin (SB) upgrades. The FAA has, however, approved guidance titled, "Guidance Criteria for Overhaul," which is incorporated as a separate document into the latest revisions to the components' maintenance manuals (MM). This document essentially provides for incorporation of the SB's required by this AD, and also requires replacement of all disposable packings and seals. The guidance provides suggested maintenance intervals consistent with mean time between failure rates for each component.

Several commenters request as an alternate means of compliance to the modification required by PW SB No. 5889, that the FAA include in this AD the tap and torque procedure described in the applicable engine MM. The FAA does not concur. The tap and torque procedure has not provided consistent fault-proof installation of engine main fuel pumps. Revision 6 to PW SB No. 5889 introduces the improved QAD ring with the necessary featural changes to alleviate the possibility of a maintenance-induced error during the installation of an engine main fuel pump. The FAA has incorporated Revision 6 into this AD.

One commenter states that rather than specifying "Time Since Last Overhaul" the AD should read "Time Since Limited Overhaul." The FAA does not concur. The intervals specified in this AD are based on time since a complete overhaul accomplished in accordance with the components' MM. Previous revisions to the components' MM's did not include a defined procedure for limited overhaul. Therefore, there is no standard by which the FAA can

evaluate whether the limited overhaul procedures will accomplish the necessary design upgrades, and the commenter does not include supporting data. The latest revisions to the components' MM's, in the section titled "Guidance Criteria for Overhaul," defines what is required to perform a limited overhaul on these components. If an operator satisfies these minimum criteria and has data to demonstrate low inflight engine shutdown and surge rates, the operator may apply for an alternate means of compliance with this AD.

One commenter states that Hamilton Standard (HS) SB No. JFC68 73–19 should be referred to as a "General" SB in order to avoid confusion. The FAA concurs and the final rule has been changed accordingly.

One commenter states that HS SB No. JFC68–3 73–150 requires installation of components that are then replaced during accomplishment of HS SB No. JFC68–3 73–151, and that HS SB No. JFC68–4 73–50 requires installation of components that are then replaced during accomplishment of HS SB No. JFC68–4 73–51. The commenter questions if it is acceptable to install the most recent parts. The FAA concurs. The reliability aspects of the requirements of HS SB No. JFC68–3 73–150 and HS SB No. JFC68–3 73–151, and HS SB No. JFC68–4 73–50 and HS SB No. JFC68–4 73–51, are similar. Accomplishment of HS SB No. JFC68–3 73–151 and HS SB No. JFC68–4 73–51 in lieu of HS SB No. JFC68–3 73–150 and HS SB No. JFC68–4 73–50, respectively, constitute an acceptable alternate means of compliance for this AD.

One commenter states that HS MM 73–21–01, Revision 19, is dated January 15, 1992, not June 15, 1991. The FAA concurs and has changed the AD accordingly.

One commenter states that HS SB No. 75–49 requires components to be reidentified to L47, not L30. The FAA concurs and has changed the AD accordingly.

One commenter states that HS SB No. 75–27 has not been revised. The FAA concurs and has changed the AD accordingly.

Several commenters address that HS Engine Vane Control (EVC)3–5 is not applicable to the PW Model JT9D–7Q engine. The FAA concurs and has changed the AD accordingly.

Several commenters state that TRW (formerly Argo-Tech) SB 73–43 does not include the PW Models JT9D–20 or –20J engines and question if compliance will be required for these models. The FAA concurs. PW has released SB No. 6127, dated September 10, 1993, that includes the PW JT9D–20 and –20J engine models. This SB in turn makes reference to Argo-Tech SB No. 73–43, which calls for modification of the PW Models JT9D–20 and –20J fuel pump to accommodate the new QAD ring. The FAA has changed the AD accordingly to include this SB.

One commenter states that soft-time requirements would be preferable to hard time requirements for one-time overhaul and modification of engine accessories. The FAA does not concur. Most significantly, many operators have decided to postpone accessory upgrades recommended by PW. The FAA's analysis indicates that postponing these upgrades has a cumulative effect which has resulted in a degradation of component reliability and loss of engine surge margin. The FAA conducted an industry-wide survey and determined that there is a direct correlation between accessory build standard and engine surge rate. There is also a direct correlation between time between accessory overhaul and loss of engine surge margin due to the degradation of the accessories. The one-time overhaul and modifications required by this AD have been established based on the FAA's review of inflight engine shutdown and surge rates. The FAA recommends that following accomplishment of the one-time overhaul and modifications required by this AD, all operators establish a soft-time overhaul interval for maintenance of engine accessories in accordance with the "Guidance Criteria for Overhaul" incorporated into the components' MM's.

One commenter states that the AD does not clearly state that the overhaul requirement for the accessories is a one-time overhaul. The FAA concurs and has changed the AD accordingly to emphasize that this overhaul is a one-time requirement only.

One commenter questions why the threshold for overhaul is 12,000 hours time in service (TIS) for the EVC and 10,000 hours for the Engine Vane and Bleed Control (EVBC). The commenter states that the EVBC is more reliable than the EVC. The FAA does not concur. The fleet survey provided data on mean time failure rates from which the overhaul intervals specified in this AD were derived. Based on this review, the FAA has determined that maximum time between overhauls should be 12,000 hours TIS for EVC's and 10,000 hours TIS for EVBC's. If an operator can provide enhanced reliability data through improved maintenance procedures, the FAA may consider this data as an acceptable alternate means of compliance for this AD.

One commenter states that the AD does not account for operators' responsiveness to vendor recommended modifications and that the AD requires immediate incorporation of SB's assigned a low to medium priority by the Original Equipment Manufacturer. The FAA does not concur. The FAA conducted a fleet survey which showed that most operators lacked adequate accessory build standards and that this inadequacy had a direct effect on engine surge and inflight shutdown rates. Furthermore, those operators that have incorporated the modifications required by this AD, satisfy the intent of this AD, and no further action is required. Regarding the SB's priority, the FAA has determined that all the required SB's have a significant effect on engine surge margin regardless of SB category.

One commenter states that the AD is contradictory about previous accomplishment. The commenter references paragraphs (a)(3), (a)(4), (b)(3), (b)(4), (c)(3), (c)(4) of the AD. The FAA does not concur. These paragraphs state that previous accomplishment for overhaul is based on Time Since Overhaul, and extend credit to those operators who have already accomplished overhaul provided they are within the prescribed intervals specified by the AD. As to the paragraphs requiring modifications, if the operator has implemented all the SB's referenced in the AD, then the operator has accomplished previously the modification requirements of this AD.

One commenter states that the AD will require all their components to be overhauled and modified by the calendar end date of January 31, 1995, based on the operator's maintenance program, which will require overhaul of all components disassembled to the extent required for these modifications. The FAA does not concur. An individual operator's FAA-approved maintenance program may dictate that the components must be overhauled by a certain date, but for other operators there may be instances where certain components may remain in service past the calendar-end date. In the NPRM, paragraphs (a)(3), (b)(3), (c)(3), and (d)(3) stated that certain components must be overhauled prior to a certain TIS, or January 31, 1995, whichever occurs later. Since publication of that NPRM, the FAA has determined to extend the compliance end date to July 31, 1995, due to the time required to adequately address all comments and publish the final rule.

One commenter states that the AD would require, based on current aircraft utilization, the majority of Fuel Control Units to be modified within 250 days after the effective date of this AD. The FAA concurs. The FAA has determined that the drawdown intervals defined in this AD constitute an acceptable minimum standard of airworthiness for the PW JT9D fuel control.

One commenter states that monitoring of engine condition is not taken into account as a compliance option in the AD. The FAA concurs. However, this data could be used as substantiation for an alternate means of compliance.

After careful review of the available data, including the comments noted above, the FAA has determined that air safety and the public interest require the adoption of the rule with the changes described previously. The FAA has determined that these changes will neither increase the economic burden on any operator nor increase the scope of the AD.

The FAA estimates that approximately 300 engines of the affected design installed on aircraft of U.S. registry will be affected by this AD, that it will take approximately 30 work hours per engine to accomplish the required actions, and that the average labor rate is $55 per work hour. Required parts will cost approximately $13,100 per engine. Based on these figures, the total cost impact of the AD on U.S. operators is estimated to be $4,425,000.

The regulations adopted herein will not have substantial direct effects on the States, on the relationship between the national government and the States, or on the distribution of power and responsibilities among the various levels of government. Therefore, in accordance with Executive Order 12612, it is determined that this final rule does not have sufficient federalism implications to warrant the preparation of a Federalism Assessment.

For the reasons discussed above, I certify that this action (1) is not a "significant regulatory activity" under Executive Order 12866; (2) is not a "significant rule" under DOT Regulatory Policies and Procedures (44 FR 11034, February 26, 1979); and (3) will not have a significant economic impact, positive or negative, on a substantial number of small entities under the criteria of the Regulatory Flexibility Act. A final evaluation has been prepared for this action and it is contained in the Rules Docket. A copy of it may be obtained from the Rules Docket at the location provided under the caption **ADDRESSES**.

List of Subjects in 14 CFR Part 39

Air Transportation, Aircraft, Aviation safety, Incorporation by reference, Safety.

Adoption of the Amendment

Accordingly, pursuant to the authority delegated to me by the Administrator, the Federal Aviation Administration amends part 39 of the Federal Aviation Regulations (14 CFR part 39) as follows:

PART 39—AIRWORTHINESS DIRECTIVES

1. The authority citation for part 39 continues to read as follows:

Authority: 49 U.S.C. App. 1354(a), 1421 and 1423; 49 U.S.C. 106(g); and 14 CFR 11.89.

§ 39.13 [Amended]

2. Section 39.13 is amended by adding the following new airworthiness directive:

94-15-16 Pratt & Whitney: Amendment 39-8987. Docket 91-ANE-51.

Applicability: Pratt & Whitney (PW) Model JT9D-3A, -7, -7A, -7AH, -7H, -7F, -7J, -20, -20J, -59A, -70A, and -7Q turbofan engines installed on but not limited to Boeing 747 series, McDonnell Douglas DC-10 series, and Airbus A300 series aircraft.

Compliance: Required as indicated, unless accomplished previously.

To prevent the loss of engine compressor surge margin caused by the deterioration of engine control system accessories, resulting in an engine surge, and subsequent power loss or inflight engine shutdown, accomplish the following:

(a) Perform a one-time overhaul and modification of the main fuel controls as follows:

(1) For main fuel controls with either 12,000 hours or more time since overhaul (TSO) on the effective date of this AD or with an undocumented TSO, or for those main fuel controls that have never been overhauled and have either 12,000 hours or more time since new (TSN) on the effective date of this AD or an undocumented TSN, overhaul in accordance with the applicable Hamilton Standard (HS) Maintenance Manual (MM) listed in Table 1 of this AD, and modify in accordance with the applicable HS Service Bulletins (SB) listed in Table 2 of this AD, at the earliest of: the next shop visit; 3,000 hours time in service (TIS) after the effective date of this AD; or July 31, 1995.

(2) For main fuel controls with more than 10,000 hours but less than 12,000 hours TSO, or TSN if never overhauled, on the effective date of this AD, overhaul in accordance with the applicable HS MM listed in Table 1 of this AD, and modify in accordance with the applicable HS SB's listed in Table 2 of this AD, not later than 3,000 hours TIS after the effective date of this AD, or by July 31, 1995, whichever occurs first.

(3) For main fuel controls with 10,000 hours or less TSO, or TSN if never overhauled, on the effective date of this AD, overhaul in accordance with the applicable HS MM listed in Table 1 of this AD, not later than 12,000 hours TSO or TSN, or by July 31, 1995, whichever occurs later.

(4) For main fuel controls with 10,000 hours or less TSO, or TSN if never overhauled, on the effective date of this AD, modify in accordance with the applicable HS SB's listed in Table 2 of this AD, not later than 12,000 hours TSO or TSN, or by July 31, 1995, whichever occurs first.

TABLE 1.—ENGINE ACCESSORY OVERHAUL REFERENCE LIST

Accessory description	Hamilton standard maint. manual No.	Temporary revision No.
Main fuel controls:		
JFC68-3	73-21-01, Revision 19, dated January 15, 1992	73-54, dated June 15, 1992.
JFC68-4	73-21-02, Revision 10, dated January 15, 1992	73-31, dated June 15, 1992.
JFC68-6	73-21-03, Revision 10, dated September 15, 1992	N/A.
Engine vane controls:		
EVC3-2 and EVC3-4	75-31-01, Revision 20, dated July 1, 1992	75-26, dated July 15, 1993.
EVC3-5	75-32-01, Revision 9, dated June 15, 1986	75-5, dated July 1, 1992.
Engine vane and bleed controls:		
GTA9-1 and GTA9-2	75-34-01, Revision 11, dated August 15, 1992	N/A.

TABLE 2.—HAMILTON STANDARD MAIN FUEL CONTROL UNIT (FCU) SERVICE BULLETIN INCORPORATION LIST

FCU model JFC68–3, JT9D–3A, –7 series engines	FCU model JFC68–4, JT9D–20, –20J series engines	FCU model JFC68–6, JT9D–59A, –70A, –7Q series engines
73–150 (L160), Revision 1, dated 8–15–91	73–50 (L94), Revision 2, dated 12–13–93	73–23 (L30), Revision 1, dated 8–15–91.
73–139 (L152), Original, dated 2–27–76	73–42 (L87), Original, dated 2–27–76	N/A.
73–129 (L143), Revision 3, dated 7–1–77	73–36 (L81), Revision 3, dated 7–1–77	73–3 (L14), Original, dated 1–7–77.
73–128 (L142), Revision 1, dated 8–29–75	73–35 (L80), Revision 1, dated 8–29–75	N/A.
73–127 (L141), Revision 2, dated 10–31–78	73–33 (L79), Revision 2, dated 10–31–78	N/A.
73–122 (L137), Revision 1, dated 9–27–77	73–29 (L75), Revision 1, dated 9–27–77	N/A.
73–121 (L136), Original, dated 5–29–74	73–28 (L74), Original, dated 5–29–74	N/A.
73–117 (L133), Revision 3, dated 10–15–74	73–24 (L71), Revision 2, dated 10–15–74	N/A.
73–111 (L128), Revision 1, dated 10–27–76	73–21 (L69), Revision 1, dated 10–27–76	N/A.
N/A	N/A	73–27 (L33), Revision 1, dated 9–27–82.
73–19, General, Revision 1, dated 9–20–86	73–19, General, Revision 1, dated 9–20–86	73–19, General, Revision 1, dated 9–20–86.

(b) Perform a one-time overhaul and modification of engine vane controls as follows:

(1) For engine vane controls with either 12,000 hours or more TSO on the effective date of this AD or with an undocumented TSO, or for those engine vane controls that have never been overhauled and have either 12,000 hours or more TSN on the effective date of this AD or an undocumented TSN, overhaul in accordance with the applicable HS MM listed in Table 1 of this AD, and modify in accordance with the applicable HS SB's listed in Table 3 of this AD, at the earliest of: the next shop visit; 3,000 hours time in service (TIS) after the effective date of this AD; or July 31, 1995.

(2) For engine vane controls with more than 10,000 hours but less than 12,000 hours TSO, or TSN if never overhauled, on the effective date of this AD, overhaul in accordance with the applicable HS MM listed in Table 1 of this AD, and modify in accordance with the applicable HS SB's listed in Table 3 of this AD, not later than 3,000 hours TIS after the effective date of this AD, or by July 31, 1995, whichever occurs first.

(3) For engine vane controls with 10,000 hours or less TSO, or TSN if never overhauled, on the effective date of this AD, overhaul in accordance with the applicable HS MM listed in Table 1 of this AD, not later than 12,000 hours TSO or TSN, or by July 31, 1995, whichever occurs later.

(4) For engine vane controls with 10,000 hours or less TSO, or TSN if never overhauled, on the effective date of this AD, modify in accordance with the applicable HS SB's listed in Table 3 of this AD not later than 12,000 hours TSO or TSN, or by July 31, 1995, whichever occurs first.

TABLE 3.—HAMILTON STANDARD ENGINE VANE CONTROL (EVC) RECOMMENDED SERVICE BULLETIN INCORPORATION LIST

EVC3–2 model JT9D–3A, –7 series engines	EVC3–4 model JT9D–20, –20J series engines	EVC3–5 model JT9D–59A, –70A series engines
75–48 (L46), Revision 1, dated 8–6–91	75–27 (L33), Revision 1, dated 8–19–91	75–9 (L10), Revision 1, dated 8–21–91.
75–45 (L43), Revision 1, dated 8–16–91	75–24 (L30), Revision 1, dated 8–19–91	75–6 (L7), Revision 1, dated 8–20–91.
75–43 (L42), Revision 2, dated 4–25–91	75–23 (L29), Original, dated 3–31–88	75–5, Original, dated 3–31–88.
75–41 (L41), Revision 3, dated 8–16–91	75–22 (L28), Revision 1, dated 8–19–91	75–4 (L5), Revision 2, dated 8–20–91.
75–42, Revision 1, dated 8–16–91	N/A	N/A.
75–37 (L40), Revision 3, dated 8–16–91	75–19 (L27), Revision 3, dated 8–19–91	75–2 (L4), Revision 1, dated 11–8–79.
75–36, Revision 1, dated 9–1–78	75–20, Original dated 9–1–78	N/A.
75–31 (L35), Original, dated 5–23–75	75–14 (L22), Original, dated 5–23–75	N/A.
75–28 (L33), Original, dated 1–3–75	75–11 (L20), Original, dated 1–3–75	N/A.
75–27 (L32), Original, dated 9–10–74	75–10 (L19), Original, dated 9–10–74	N/A.
75–49 (L47), Original, dated 5–13–91	75–28 (L34), Original, dated 5–13–91	N/A.

(c) Perform a one-time overhaul and modification of engine vane and bleed controls as follows:

(1) For engine vane and bleed controls with either 10,000 hours or more TSO on the effective date of this AD or with an undocumented TSO, or for those engine vane and bleed controls that have never been overhauled and have either 10,000 hours or more TSN on the effective date of this AD or an undocumented TSN, overhaul in accordance with the applicable HS MM listed in Table 1 of this AD, and modify in accordance with the applicable HS SB's listed in Table 4 of this AD, at the earliest of: the next shop visit; 3,000 hours TIS after the effective date of this AD; or July 31, 1995.

(2) For engine vane and bleed controls with more than 8,000 hours but less than 10,000 hours TSO, or TSN if never overhauled, on the effective date of this AD, overhaul in accordance with the applicable HS MM listed in Table 1 of this AD, and modify in accordance with the applicable HS SB's listed in Table 4 of this AD, not later than 3,000 hours TIS after the effective date of this AD, or by July 31, 1995, whichever occurs first.

(3) For engine vane and bleed controls with 8,000 hours or less TSO, or TSN if never overhauled, on the effective date of this AD, overhaul in accordance with the applicable HS MM listed in Table 1 of this AD, not later than 10,000 hours TSO or TSN, or by July 31, 1995, whichever occurs later.

(4) For engine vane and bleed controls with 8,000 hours or less TSO, or TSN if never overhauled, on the effective date of this AD, modify in accordance with the applicable HS SB's listed in Table 4 of this AD, not later than 10,000 hours TSO or TSN, or by July 31, 1995, whichever occurs first.

TABLE 4.—HAMILTON STANDARD ENGINE VANE BLEED CONTROL (EVBC) (GTA9) REQUIRED SERVICE BULLETIN INCORPORATION LIST

JT9D–59A, -70A, -7Q, Series Engines

Service bulletin	Revision	Date
GTA9–75–26 (L21)	1	8–21–91
GTA9–75–19 (L14)	1	8–21–91
GTA9–75–17 (L13)	Original	3–31–88
GTA9–75–16 (L12)	Original	3–20–88
GTA9–75–9 (L8)	3	8–15–92

(d) Perform a one-time overhaul and modification of main fuel gear pumps as follows:

(1) For main fuel gear pumps with either 8,000 hours or more TSO on the effective date of this AD or with an undocumented TSO, or for those main fuel gear pumps that have never been overhauled and have either 8,000 hours or more TSN on the effective

date of this AD or an undocumented TSN, overhaul in accordance with either Argo-Tech (AT) Overhaul Manual (OM) No. 73-11-01 or No. 73-11-02, as applicable, and modify in accordance with the applicable TRW, AT, and Pratt & Whitney (PW) SB's listed in Table 5 of this AD, at the earliest of: the next shop visit; 3,000 hours TIS after the effective date of this AD; or July 31, 1995.

(2) For main fuel gear pumps with more than 6,000 hours but less than 8,000 hours TSO, or TSN if never overhauled, on the effective date of this AD, overhaul in accordance with either AT OM No. 73-11-01 or No. 73-11-02, as applicable, and modify in accordance with the applicable TRW, AT, and PW SB's listed in Table 5 of this AD, not later than 3,000 hours TIS after the effective date of this AD, or by July 31, 1995, whichever occurs first.

(3) For main fuel gear pumps with 6,000 hours or less TSO, or TSN if never overhauled, on the effective date of this AD, overhaul in accordance with either AT OM No. 73-11-01 or No. 73-11-02, as applicable, not later than 8,000 hours TSO or TSN, or by July 31, 1995, whichever occurs later.

(4) For main fuel gear pumps with 6,000 hours or less TSO, or TSN if never overhauled, on the effective date of this AD, modify in accordance with the applicable TRW, AT and PW SB's listed in Table 5 of this AD, not later than 8,000 hours TSO or TSN, or by July 31, 1995, whichever occurs first.

TABLE 5.—TRW, AT, AND PW MAIN FUEL GEAR PUMP REQUIRED SERVICE BULLETIN INCORPORATION LIST

JT9D-3A, -7, -20, -20J series engines	JT9D-59A, -70A, -7Q series engines
TRW 73-28 (-26), Revision 2, dated 4-15-77.	N/A.
TRW 73-29 (-27), Revision 1, dated 9-1-80.	TRW 73-5 (-9), Original, dated 4-30-81.
TRW 73-31 (-29), Original, dated 9-1-79.	N/A.
TRW 73-32 (-30), Revision 3, dated 4-1-85.	N/A.
AT 73-36 (-32), Revision 1, dated 10-1-88.	N/A.
AT 73-43, Original, dated 12-15-89.	N/A.
N/A	TRW 73-8 (-12) Original, dated 9-1-82.
PW 5889, Revision 6, dated 12-20-93.	N/A.
PW 6127, Original, dated 9-10-93.	N/A.

(e) For the purpose of this AD, a shop visit is defined as an engine removal where engine maintenance entails separation of pairs of mating engine flanges or the removal of a disk, hub, or spool.

(f) An alternative method of compliance or adjustment of the compliance time that provides an acceptable level of safety, may be used if approved by the Manager, Engine Certification Office. The request should be forwarded through an FAA Principal Maintenance Inspector, who may add comments and then send it to the Manager, Engine Certification Office.

Note: Information concerning the existence of approved alternative methods of compliance with this airworthiness directive, if any, may be obtained from the Engine Certification Office.

(g) Special flight permits may be issued in accordance with sections 21.197 and 21.199 of the Federal Aviation Regulations (14 CFR 21.197 and 21.199) to operate the aircraft to a location where the requirements of this AD can be accomplished.

(h) The overhauls and modifications shall be done in accordance with the following service bulletins:

SB No.	Pages	Revision	Date
TRW SB No. 73-28	1	2	4-15-77
	2	1	1-15-77
	3	2	4-15-77
	4	1	1-15-77
	4A	2	4-15-77
	5-7	1	1-15-77
	8	2	4-15-77
	9-10	1	1-15-77
Total Pages: 10			
TRW SB No. 73-29	1	1	9-1-80
	2	Original	3-1-79
	3	1	9-1-80
	4	Original	3-1-79
Total Pages: 4			
TRW SB No. 73-31	1-3	Original	9-1-79
Total Pages: 3			
TRW SB No. 73-32	1-3	3	4-1-85
	4	1	6-15-81
Total Pages: 4			
Argo-Tech SB No. 73-36	1-3	1	10-1-88
Total Pages: 3			
Argo-Tech SB No. 73-43	1	Original	12-15-89
Total Pages: 4			
TRW SB No. 73-8	1-4	Original	9-1-82
Total Pages: 4			
TRW SB No. 73-5	1-3	Original	4-30-81
Total Pages: 3			
PW SB No. 5889	1	6	12-20-93
	2	5	9-21-92
	3-5	Original	12-21-89
	6	4	5-7-92
	7-8	Original	12-21-89
	9-11	3	10-4-91
	12	1	1-24-90
	13	4	5-7-92
	14-18	Original	12-21-89
	19	6	12-20-93
	20	4	5-7-92

SB No.	Pages	Revision	Date
Total Pages: 20			
PW SB No. 6127	1–14	Original	9–10–93
Total Pages: 14			
HS SB No. GTA9–75–26	1–3	1	8–21–91
	4–6	Original	5–9–90
Total Pages: 6			
HS SB No. GTA9–75–19	1–4	1	8–21–91
Total Pages: 4			
HS SB No. GTA9–75–17	1–3	Original	3–31–88
Total Pages: 3			
HS SB No. GTA9–75–16	1–3	Original	3–20–88
Total Pages: 3			
HS SB No. GTA9–75–9	1–2	3	8–15–92
	3–7	2	8–21–91
Total Pages: 7			
HS SB No. 75–9	1–2	1	8–20–91
	2A/2B	1	8–20–91
	3–6	Original	5–9–90
Total Pages: 7			
HS SB No. 75–6	1–3	1	8–20–91
Total Pages: 3			
HS SB No. 75–5	1–3	Original	3–31–88
Total Pages: 3			
HS SB No. 75–4	1–3	2	8–20–91
	4–7	1	10–15–84
Total Pages: 7			
HS SB No. 75–2	1–7	1	11–8–79
Total Pages: 7			
HS SB No. 75–28	1–4	Original	5–13–91
Total Pages: 4			
HS SB No. 75–27	1–6	Original	8–19–91
Total Pages: 5			
HS SB No. 75–24	1–3	1	8–19–91
Total Pages: 3			
HS SB No. 75–23	1–3	Original	3–31–88
Total Pages: 3			
HS SB No. 75–22	1–2	1	8–19–91
	2A/2B	1	8–19–91
	3–6	Original	4–30–84
Total Pages: 6			
HS SB No. 75–19	1–2	3	8–19–91
	2A/2B	3	8–19–91
	3–7	2	11–8–79
Total Pages: 7			
HS SB No. 75–20	1–3	Original	9–1–78
Total Pages: 3			
HS SB No. 75–14	1–4	Original	5–23–75
Total Pages: 4			
HS SB No. 75–11	1–3	Original	1–3–75
Total Pages: 3			
HS SB No. 75–10	1–5	Original	9–10–74
Total Pages: 5			
HS SB No. 75–49	1–4	Original	5–13–91
Total Pages: 4			
HS SB No. 75–48	1–2	1	8–16–91
	3–6	Original	5–9–90
Total Pages: 6			
HS SB No. 75–45	1–4	1	8–16–91
Total Pages: 4			
HS SB No. 75–43	1–4	2	4–25–91
Total Pages: 4			
HS SB No. 75–42	1–2	1	8–16–91
Total Pages: 2			
HS SB No. 75–41	1–3	3	8–16–91
	4–7	2	12–20–90
Total Pages: 7			
HS SB No. 75–37	1–2	3	8–16–91
	2A/2B	3	8–16–91
	3–7	2	12–12–79
Total Pages: 8			
HS SB No. 75–36	1–3	Revision 1	9–1–78
Total Pages: 3			
HS SB No. 75–31	1–4	Original	5–23–75
Total Pages: 4			
HS SB No. 75–28	1–3	Original	1–3–75

SB No.	Pages	Revision	Date
Total Pages: 3			
HS SB No. 75–27	1–5	Original	9–10–74
Total Pages: 6			
HS General SB No. 73–19	1–3	1	9–20–86
	4	Original	12–15–84
	5–6	1	9–20–86
Total Pages: 6			
HS SB No. 73–27	1–2	1	9–27–82
	3–4	Original	2–10–82
	5	1	9–27–82
Total Pages: 5			
HS SB No. 73–23	1–2	1	8–15–91
	2A/2B	1	8–15–91
	3–5	Original	4–30–81
Total Pages: 5			
HS SB No. 73–3	1–5	Original	1–7–77
Total Pages: 5			
HS SB No. 73–50	1–2	2	12–13–92
	2A/2B	1	8–15–91
	3	Original	4–30–81
	4–5	2	12–13–92
Total Pages: 5			
HS SB No. 73–42	1–3	Original	2–27–76
Total Pages: 3			
HS SB No. 73–36	1	3	7–1–77
	2	1	11–5–76
	3	3	7–1–77
	4	2	4–20–77
	5	3	7–1–77
Total Pages: 5			
HS SB No. 73–35	1–2	1	8–29–75
	3–4	Original	4–22–75
	5–6	1	8–29–75
	7	Original	4–22–75
Total Pages: 7			
HS SB No. 73–33	1	2	10–31–78
	2	1	3–5–76
	3–4	2	10–31–78
	5	1	3–5–76
Total Pages: 5			
HS SB No. 73–29	1–3	1	9–27–77
	4–5	Original	2–7–75
	6–7	1	9–27–77
Total Pages: 7			
HS SB No. 73–28	1–5	Original	5–29–74
Total Pages: 5			
HS SB No. 73–24	1–2	2	10–15–74
	3–5	Original	11–16–73
Total Pages: 5			
HS SB No. 73–21	1–8	1	10–27–76
Total Pages: 8			
HS SB No. 73–150	1–2B	1	8–15–91
	3–5	Original	4–30–81
Total Pages: 5			
HS SB No. 73–139	1–3	Original	2–27–76
Total Pages: 3			
HS SB No. 73–129	1	3	7–1–77
	2	Original	2–21–75
	3	3	7–1–77
	4	2	4–20–77
	5	3	7–1–77
Total Pages: 5			
HS SB No. 73–128	1–3	1	8–29–75
	4	Original	4–22–75
	5	1	8–29–75
	6–7	Original	4–22–75
Total Pages: 7			
HS SB No. 73–127	1	2	10–31–78
	2	Original	3–12–75
	3–6	2	10–31–78
Total Pages: 6			
HS SB No. 73–122	1	1	9–27–77
	2	Original	2–7–75
	3	1	9–27–77

SB No.	Pages	Revision	Date
	4–5	Original	2–7–75
	6–7	1	9–27–77
Total Pages: 7			
HS SB No. 73–121	1–5	Original	5–29–74
Total Pages: 5			
HS SB No. 73–117	1–2	3	10–15–74
	3–5	Original	11–16–73
Total Pages: 5			
HS SB No. 73–111	1–8	1	10–27–76
Total Pages: 8			

This incorporation by reference was approved by the Director of the Federal Register in accordance with 5 U.S.C. 552(a) and 1 CFR part 51. Copies may be obtained from Pratt & Whitney, Technical Publications Department, M/S 132–30, 400 Main Street, East Hartford, CT 06108. Copies may be inspected at the FAA, New England Region, Office of the Assistant Chief Counsel, 12 New England Executive Park, Burlington, MA; or at the Office of the Federal Register, 800 North Capitol Street NW., suite 700, Washington, DC.

(i) This amendment becomes effective on October 14, 1994.

Issued in Burlington, Massachusetts, on July 28, 1994.

Jay J. Pardee,

Manager, Engine and Propeller Directorate, Aircraft Certification Service.

[FR Doc. 94–19354 Filed 8–12–94; 8:45 am]

BILLING CODE 4910–13–P

---

14 CFR Part 39

[Docket No. 93–CE–16–AD; Amendment 39–9002; AD 94–17- 06]

Airworthiness Directives; GROB Luft und Raumfahrt Models G102, G103, G109, and G109B Gliders

AGENCY: Federal Aviation Administration, DOT.

ACTION: Final rule.

SUMMARY: This amendment adopts a new airworthiness directive (AD) that applies to GROB Luft und Raumfahrt (Grob) Models G102, G103, G109, and G109B gliders. This action requires inspecting (one-time) the airbrake stops for cracks in the surrounding gelcoat and to ensure that the outer airbrake swivel levers are in contact with the stops during operation, and repairing any gelcoat cracks or any airbrake stops not in contact with the swivel levers. Excessive wear caused the airbrake fence to jam on the upper shell of the wing on one of the affected gliders, resulting in an accident. The actions specified by this AD are intended to prevent airbrake failure caused by jamming of the airbrake fence, which could result in loss of control of the glider.

DATES: Effective September 30, 1994.

The incorporation by reference of certain publications listed in the regulations is approved by the Director of the Federal Register as of September 30, 1994.

ADDRESSES: Service information that applies to this AD may be obtained from Grob Luft und Raumfahrt GmbH, D-8939 Mattsies, Germany. This information may also be examined at the Federal Aviation Administration (FAA), Central Region, Office of the Assistant Chief Counsel, room 1558, 601 E. 12th Street, Kansas City, Missouri 64106; or at the Office of the Federal Register, 800 North Capitol Street NW., suite 700, Washington, DC.

FOR FURTHER INFORMATION CONTACT: Mr. E. S. Chalpin, Program Manager, Brussels Aircraft Certification Office, FAA, Europe, Africa, and Middle East Office, c/o American Embassy, B–1000 Brussels, Belgium; telephone (322) 513.38.30 ext. 2717; facsimile (322) 230.68.99; or Mr. Herman C. Belderok, Project Officer, Small Airplane Directorate, Aircraft Certification Service, FAA, 1201 Walnut, suite 900, Kansas City, Missouri 64106; telephone (816) 426–6932; facsimile (816) 426–2169.

SUPPLEMENTARY INFORMATION: A proposal to amend part 39 of the Federal Aviation Regulations (14 CFR part 39) to include an AD that would apply to GROB Luft und Raumfahrt Models G102, G103, G109, and G109B gliders was published in the **Federal Register** on March 15, 1993 (58 FR 13710). The action proposed to require inspecting (one-time) the airbrake stops for cracks in the surrounding gelcoat and to ensure that the outer airbrake swivel levers are in contact with stops during operation, and repairing any gelcoat cracks or any airbrake stops not in contact with the swivel levers. The proposed actions would be accomplished in accordance with Grob Service Bulletin TM 306–31, TM 315–49, TM 320–6, and TM 817–36 (one document), dated September 14, 1992.

Interested persons have been afforded an opportunity to participate in the making of this amendment. No comments were received on the proposed rule or the FAA's determination of the cost to the public.

After careful review of all available information, the FAA has determined that air safety and the public interest require the adoption of the rule as proposed except for minor editorial corrections. The FAA has determined that these minor corrections will not change the meaning of the AD nor add any additional burden upon the public than was already proposed.

The FAA estimates that 282 gliders in the U.S. registry will be affected by this AD, that it will take approximately 1 workhour per glider to accomplish the required action, and that the average labor rate is approximately $55 an hour. Based on these figures, the total cost impact of the AD on U.S. operators is estimated to be $15,510. This figure is based on the assumption that no affected glider owner/operator has accomplished the required action.

The FAA has determined that calendar time is the most desirable method of compliance for this AD because yearly operational times vary greatly throughout the fleet. For example, one glider operator might utilize the glider 10 hours time-in-service (TIS) in one month, while another may not utilize the glider 10 hours TIS in one year. Therefore, to maintain continuity and avoid inadvertent grounding of the affected gliders, compliance based upon calendar time is utilized.

The regulations adopted herein will not have substantial direct effects on the States, on the relationship between the national government and the States, or on the distribution of power and responsibilities among the various levels of government. Therefore, in accordance with Executive Order 12612, it is determined that this final rule does not have sufficient federalism implications to warrant the preparation of a Federalism Assessment.

For the reasons discussed above, I certify that this action (1) is not a "significant regulatory action " under

Executive Order 12866; (2) is not a "significant rule" under DOT Regulatory Policies and Procedures (44 FR 11034, February 26, 1979); and (3) will not have a significant economic impact, positive or negative, on a substantial number of small entities under the criteria of the Regulatory Flexibility Act. A copy of the final evaluation prepared for this action is contained in the Rules Docket. A copy of it may be obtained by contacting the Rules Docket at the location provided under the caption "ADDRESSES".

List of Subjects in 14 CFR Part 39

Air transportation, Aircraft, Aviation safety, Incorporation by reference, Safety.

Adoption of the Amendment

Accordingly, pursuant to the authority delegated to me by the Administrator, the Federal Aviation Administration amends part 39 of the Federal Aviation Regulations (14 CFR part 39) as follows:

PART 39—AIRWORTHINESS DIRECTIVES

1. The authority citation for part 39 continues to read as follows:

Authority: 49 U.S.C. App. 1354(a), 1421 and 1423; 49 U.S.C. 106(g); and 14 CFR 11.89.

39.13 [Amended]

2. Section 39.13 is amended by adding a new AD to read as follows:

94-17-06 Grob Luft und Raumfahrt: Amendment 39-9002; Docket No. 93-CE-16-AD.

Applicability: Models G102, G103, G109, and G109B gliders (all serial numbers), certificated in any category.

Compliance: Required within the next 60 calendar days after the effective date of this AD, unless already accomplished.

To prevent airbrake failure caused by jamming of the airbrake fence, which could result in loss of control of the glider, accomplish the following:

(a) Inspect the airbrake stops for cracks in the surrounding gelcoat and to ensure that the outer airbrake swivel levers are in contact with stops during operation in accordance with the instructions in Grob Service Bulletin TM 306-31, TM 315-49, TM 320-6, and TM 817-36 (one document), dated September 14, 1992.

(b) Prior to further flight, repair any gelcoat cracks or any airbrake stops not in contact with the swivel levers in accordance with the instructions in Grob Service Bulletin TM 306-31, TM 315-49, TM 320-6, and TM 817-36 (one document), dated September 14, 1992.

(c) An alternative method of compliance or adjustment of the compliance time that provides an equivalent level of safety may be approved by the Manager, Brussels Aircraft Certification Office (ACO), FAA, Europe, Africa, and Middle East Office, c/o American Embassy, B-1000 Brussels, Belgium. The request shall be forwarded through an appropriate FAA Maintenance Inspector, who may add comments and then send it to the Manager, Brussels ACO.

Note: Information concerning the existence of approved alternative methods of compliance with this AD, if any, may be obtained from the Brussels ACO.

(d) The inspection required by this AD shall be done in accordance with Grob Service Bulletin TM 306-31, TM 315-49, TM 320-6, and TM 817-36 (one document), dated September 14, 1992. This incorporation by reference was approved by the Director of the Federal Register in accordance with 5 U.S.C. 552(a) and 1 CFR part 51. Copies may be obtained from GROB Luft und Raumfahrt GmbH, D-8939 Mattsies, Federal Republic of Germany. Copies may be inspected at the FAA, Central Region, Office of the Assistant Chief Counsel, Room 1558, 601 E. 12th Street, Kansas City, Missouri, or at the Office of the Federal Register, 800 North Capitol Street, NW., suite 700, Washington, DC.

(f) This amendment (39-9002) becomes effective on September 30, 1994.

Issued in Kansas City, Missouri, on August 8, 1994.

Barry D. Clements,

Manager, Small Airplane Directorate, Aircraft Certification Service.

[FR Doc. 94-19853 Filed 8-12-94; 8:45 am]

BILLING CODE 4910-03-P

DEPARTMENT OF HEALTH AND HUMAN SERVICES

Food and Drug Administration

21 CFR Parts 510 and 522

Animal Drugs, Feeds, and Related Products; Ketamine Hydrochloride Injection

AGENCY: Food and Drug Administration, HHS.

ACTION: Final rule.

SUMMARY: The Food and Drug Administration (FDA) is amending the animal drug regulations to reflect approval of an abbreviated new animal drug application (ANADA) filed by Phoenix Pharmaceutical, Inc. The ANADA provides for intramuscular use of ketamine hydrochloride injection in cats for restraint or as the sole anesthetic agent for diagnostic or minor, brief, surgical procedures that do not require skeletal muscle relaxation, and in subhuman primates for restraint.

EFFECTIVE DATE: August 15, 1994.

FOR FURTHER INFORMATION CONTACT: Charles W. Francis, Center For Veterinary Medicine (HFV-114), Food and Drug Administration, 7500 Standish Pl., Rockville, MD 20855, 301-594-1617.

SUPPLEMENTARY INFORMATION: Phoenix Pharmaceutical, Inc., 4621 Easton Rd., P.O. Box 6457 Farleigh Station, St. Joseph, MO 64506-0457, filed ANADA 200-042. The ANADA provides for intramuscular use of Ketaject® (ketamine hydrochloride injection, U.S.P.) in cats for restraint or as the sole anesthetic agent for diagnostic or minor, brief, surgical procedures that do not require skeletal muscle relaxation, and in subhuman primates for restraint. The drug is limited to use by or on the order of a licensed veterinarian.

Approval of ANADA 200-042 for Phoenix's Ketaject® Injection is as a generic copy of Fort Dodge's NADA 045-290 for Vetalar®/Ketaset® (ketamine hydrochloride injection, U.S.P.). The ANADA is approved as of June 30, 1994, and the regulations in 21 CFR 522.1222a(c) are amended to reflect the approval. The basis for approval is discussed in the freedom of information summary.

In addition, Phoenix Pharmaceutical, Inc., has not been previously listed in 21 CFR 510.600(c) as a sponsor of an approved application. Accordingly, that section is amended to add entries for the firm.

In accordance with the freedom of information provisions of part 20 (21 CFR part 20) and § 514.11(e)(2)(ii) (21 CFR 514.11(e)(2)(ii)), a summary of safety and effectiveness data and information submitted to support approval of this application may be seen in the Dockets Management Branch (HFA-305), Food and Drug Administration, rm. 1-23, 12420 Parklawn Dr., Rockville, MD 20857, between 9 a.m. and 4 p.m., Monday through Friday.

The agency has carefully considered the potential environmental effects of this action. FDA has concluded that the action will not have a significant impact on the human environment, and that an environmental impact statement is not required. The agency's finding of no significant impact and the evidence supporting that finding, contained in an environmental assessment, may be seen in the Dockets Management Branch (address above) between 9 a.m. and 4 p.m., Monday through Friday.

List of Subjects

21 CFR Part 510

Administrative practice and procedure, Animal drugs, Labeling, Reporting and recordkeeping requirements.

21 CFR Part 522

Animal drugs.

Therefore, under the Federal Food, Drug, and Cosmetic Act and under authority delegated to the Commissioner of Food and Drugs and redelegated to the Center for Veterinary Medicine, 21 CFR parts 510 and 522 are amended as follows:

PART 510— NEW ANIMAL DRUGS

1. The authority citation for 21 CFR part 510 continues to read as follows:

Authority: Secs. 201, 301, 501, 502, 503, 512, 701, 721 of the Federal Food, Drug, and Cosmetic Act (21 U.S.C. 321, 331, 351, 352, 353, 360b, 371, 379e).

2. Section 510.600 is amended in the table in paragraph (c)(1) by alphabetically adding a new entry for "Phoenix Pharmaceutical, Inc.," and in the table in paragraph (c)(2) by numerically adding a new entry for "057319" to read as follows:

§ 510.600 Names, addresses, and drug labeler codes of sponsors of approved applications.

* * * * *

(c) * * *

(1) * * *

Firm name and address	Drug labeler code
* * * * *	
Phoenix Pharmaceutical, Inc., 4621 Easton Rd., P.O. Box 6457 Farleigh Station, St. Joseph, MO 64506–0457	057319.
* * * * *	

(2) * * *

Drug labeler code	Firm name and address
* * * * *	
057319	Phoenix Pharmaceutical, Inc., 4621 Easton Rd., P.O. Box 6457 Farleigh Station, St. Joseph, MO 64506–0457
* * * * *	

PART 522—IMPLANTATION OR INJECTABLE DOSAGE FORM NEW ANIMAL DRUGS

1. The authority citation for 21 CFR part 522 continues to read as follows:

Authority: Sec. 512 of the Federal Food, Drug, and Cosmetic Act (21 U.S.C. 360b).

2. Section 522.1222a is amended by revising paragraph (c) to read as follows:

§ 522.1222a Ketamine hydrochloride injection.

* * * * *

(c) *Sponsors.* See Nos. 000856 and 057319 in § 510.600(c) of this chapter.

* * * * *

Dated: August 8, 1994.

Richard H. Teske,

Deputy Director, Premarket Review, Center for Veterinary Medicine.

[FR Doc. 94–19933 Filed 8–12–94; 8:45 am]

BILLING CODE 4160–01–F

---

21 CFR Part 520

Oral Dosage Form New Animal Drugs; Oxytetracycline Hydrochloride Soluble Powder

AGENCY: Food and Drug Administration, HHS.

ACTION: Final rule.

SUMMARY: The Food and Drug Administration (FDA) is amending the animal drug regulations to reflect approval of an abbreviated new animal drug application (ANADA) filed by Agri Laboratories, Ltd. The ANADA provides for the use of a generic oxytetracycline hydrochloride (OTC HCl) soluble powder as an antibacterial in drinking water for chickens, turkeys, and swine.

EFFECTIVE DATE: August 15, 1994.

FOR FURTHER INFORMATION CONTACT: Melanie R. Berson, Center for Veterinary Medicine (HFV–135), Food and Drug Administration, 7500 Standish Pl., Rockville, MD 20855, 301–594–1643.

SUPPLEMENTARY INFORMATION: Agri Laboratories, Ltd., P.O. Box 3103, St. Joseph, MO 64503, is the sponsor of ANADA 200–066, which provides for the use of a generic OTC HCl soluble powder as an antibacterial in drinking water for chickens, turkeys, and swine with the following conditions:

1. In chickens: control of infectious synovitis caused by *Mycoplasma synoviae*, control of chronic respiratory disease and air sac infections caused by *M. gallisepticum* and *Escherichia coli*, and control of fowl cholera caused by *Pasteurella multocida*;

2. In turkeys: control of hexamitiasis caused by *Hexamita meleagridis*, control of infectious synovitis caused by *M. synoviae*, control of complicating bacterial organisms associated with bluecomb (transmissible enteritis, coronaviral enteritis) in growing turkeys; and

3. In swine: control and treatment of bacterial enteritis caused by *E. coli* and *Salmonella choleraesuis* and bacterial pneumonia caused by *P. multocida*. In breeding swine: control and treatment of leptospirosis (reducing the incidence of abortions and shedding of leptospira) caused by *Leptospira pomona*.

ANADA 200–066 for Agri Laboratories, Ltd.'s Agrimycin-343 Soluble Powder is a generic copy of I.D. Russell Co. Laboratories' NADA 130–435 for Oxytet Soluble. The ANADA is approved as of July 15, 1994, and the regulations are amended in 21 CFR 520.1660d to reflect the approval. The basis for approval is discussed in the freedom of information summary.

In accordance with the freedom of information provisions of part 20 (21 CFR part 20) and § 514.11(e)(2)(ii) (21 CFR 514.11(e)(2)(ii)), a summary of safety and effectiveness data and information submitted to support approval of this application may be seen in the Dockets Management Branch (HFA–305), Food and Drug Administration, rm. 1–23, 12420 Parklawn Dr., Rockville, MD 20857, between 9 a.m. and 4 p.m., Monday through Friday.

The agency has carefully considered the potential environmental effects of this action. FDA has concluded that the action will not have a significant impact on the human environment, and that an environmental impact statement is not required. The agency's finding of no significant impact and the evidence supporting that finding, contained in an environmental assessment, may be seen in the Dockets Management Branch (address above) between 9 a.m. and 4 p.m., Monday through Friday.

List of Subjects in 21 CFR Part 520

Animal drugs.

Therefore, under the Federal Food, Drug, and Cosmetic Act and under authority delegated to the Commissioner of Food and Drugs and redelegated to the Center for Veterinary Medicine, 21 CFR part 520 is amended as follows:

PART 520—ORAL DOSAGE FORM NEW ANIMAL DRUGS

1. The authority citation for 21 CFR part 520 continues to read as follows:

Authority: Sec. 512 of the Federal Food, Drug, and Cosmetic Act (21 U.S.C. 360b).

2. Section 520.1660d is amended by adding new paragraphs (a)(6) and (b)(4), and by revising the last sentence in paragraphs (e)(1)(ii)(A)(*3*), (e)(1)(ii)(B)(*3*), (e)(1)(ii)(C)(*3*), and (e)(1)(iii)(C) to read as follows:

§ 520.1660d Oxytetracycline hydrochloride soluble powder.

(a) * * *

(6) Each 1.32 grams of powder contains 1 gram of OTC HCl (packet: 4.78 oz.).

(b) * * *

(4) No. 057561 for use of OTC HCl concentration in paragraph (a)(6) of this section in chickens, turkeys, and swine.

* * * * *

(e) * * *

(1) * * *

(ii) * * *

(A) * * *

(3) * * * Withdraw 5 days prior to slaughter those products sponsored by Nos. 000069, 017144, and 057561 in §510.600(c) of this chapter.

(B) * * *

(3) * * * Withdraw 5 days prior to slaughter those products sponsored by Nos. 000069, 017144, and 057561 in §510.600(c) of this chapter.

(C) * * *

(3) * * * Withdraw 5 days prior to slaughter those products sponsored by Nos. 000069, 017144, and 057561 in §510.600(c) of this chapter.

(iii) * * *

(C) * * * Administer up to 5 days; do not use for more than 5 consecutive days; withdraw 13 days prior to slaughter those products sponsored by Nos. 017144 and 057561.

* * * * *

Dated: August 8, 1994.

Richard H. Teske,

Deputy Director, Premarket Review, Center for Veterinary Medicine.

[FR Doc. 94–19934 Filed 8–12–94; 8:45 am]

BILLING CODE 4160–01–F

---

21 CFR Part 522

Implantation or Injectable Dosage Form New Animal Drugs; Butorphanol Tartrate Injection

AGENCY: Food and Drug Administration, HHS.

ACTION: Final rule.

SUMMARY: The Food and Drug Administration (FDA) is amending the animal drug regulations to reflect approval of a new animal drug application (NADA) filed by Fort Dodge Laboratories. The NADA provides for the use of butorphanol tartrate injection in cats for the relief of pain caused by major or minor trauma, or pain associated with surgical procedures.

EFFECTIVE DATE: August 15, 1994.

FOR FURTHER INFORMATION CONTACT: Marcia K. Larkins, Center for Veterinary Medicine (HFV–112), Food and Drug Administration, 7500 Standish Pl., Rockville, MD 20855, 301–594–0614.

SUPPLEMENTARY INFORMATION: Fort Dodge Laboratories, Fort Dodge, IA 50501, currently holds approval for NADA 102–990 which provides for use of butorphanol tartrate injection for the treatment of dogs for relief of chronic nonproductive cough originating from inflammatory conditions of the upper respiratory tract and for NADA 135–780 which provides for use of the drug for the treatment of horses and yearlings for relief of pain associated with colic, and for postpartum pain. The firm has filed NADA 141–047 which provides for use of a new concentration (2 milligrams per milliliter) of the drug in cats for the relief of pain caused by major or minor trauma, or pain associated with surgical procedures. The NADA is approved as of July 5, 1994, and the regulations are amended in 21 CFR 522.246 to reflect the approval. The basis for approval is discussed in the freedom of information summary.

In accordance with the freedom of information provisions of part 20 (21 CFR part 20) and §514.11(e)(2)(ii) (21 CFR 514.11(e)(2)(ii)), a summary of safety and effectiveness data and information submitted to support approval of this application may be seen in the Dockets Management Branch (HFA–305), Food and Drug Administration, rm. 1–23, 12420 Parklawn Dr., Rockville, MD 20857, between 9 a.m. and 4 p.m., Monday through Friday.

Under section 512(c)(2)(F)(ii) of the Federal Food, Drug, and Cosmetic Act (21 U.S.C. 360b(c)(2)(F)(ii)), this approval for nonfood producing animals qualifies for 3 years of marketing exclusivity beginning July 5, 1994, because the application contains reports of new clinical or field investigations (other than bioequivalence studies) essential to the approval of the application and conducted or sponsored by the applicant.

The agency has carefully considered the potential environmental effects of this action. FDA has concluded that the action will not have a significant impact on the human environment, and that an environmental impact statement is not required. The agency's finding of no significant impact and the evidence supporting that finding, contained in an environmental assessment, may be seen in the Dockets Management Branch (address above) between 9 a.m. and 4 p.m., Monday through Friday.

List of Subjects in 21 CFR Part 522

Animal drugs.

Therefore, under the Federal Food, Drug, and Cosmetic Act and under authority delegated to the Commissioner of Food and Drugs and redelegated to the Center for Veterinary Medicine, 21 CFR part 522 is amended as follows:

PART 522—IMPLANTATION OR INJECTABLE DOSAGE FORM NEW ANIMAL DRUGS

1. The authority citation for 21 CFR part 522 continues to read as follows:

Authority: Sec. 512 of the Federal Food, Drug, and Cosmetic Act (21 U.S.C. 360b).

2. Section 522.246 is amended in paragraph (a) by adding ", 2" after "0.5" and before the word "or", and by adding new paragraph (c)(3) to read as follows:

§522.246 Butorphanol tartrate injection.

* * * * *

(c) * * *

(3) *Cats*—(i) *Amount.* 0.2 milligram of butorphanol base activity per pound of body weight (0.4 milligram/kilogram), using 2 milligrams per milliliter solution.

(ii) *Indications for use.* For the relief of pain in cats caused by major or minor trauma, or pain associated with surgical procedures.

(iii) *Limitations.* For subcutaneous injection in cats only. Dose may be repeated up to 4 times per day. Do not treat for more than 2 days. Safety for use in pregnant female cats, breeding male cats or kittens less than 4 months of age has not been determined. Federal law restricts this drug to use by or on the order of a licensed veterinarian.

Dated: August 8, 1994.

Richard H. Teske,

Deputy Director, Premarket Review, Center for Veterinary Medicine.

[FR Doc. 94–19926 Filed 8–12–94; 8:45 am]

BILLING CODE 4160–01–F

---

21 CFR Part 522

Animal Drugs, Feeds, and Related Products; Ceftiofur

AGENCY: Food and Drug Administration, HHS.

ACTION: Final rule.

SUMMARY: The Food and Drug Administration (FDA) is amending the animal drug regulations to reflect approval of a supplemental new animal drug application (NADA) filed by The Upjohn Co. The supplemental NADA provides for use of ceftiofur sterile powder intramuscularly in horses for treatment of respiratory infections associated with *Streptococcus zooepidemicus.*

EFFECTIVE DATE: August 15, 1994.

FOR FURTHER INFORMATION CONTACT: Charles W. Francis, Center for Veterinary Medicine (HFV–114), Food and Drug Administration, 7500 Standish

Pl., Rockville, MD 20855, 301–594–1617.

SUPPLEMENTARY INFORMATION: The Upjohn Co., Kalamazoo, MI 49001, filed supplemental NADA 140–338, which provides for use of Naxcel® Sterile Powder (ceftiofur sodium) in horses as a 50 milligrams per milliliter reconstituted injectable solution. The product is currently approved for use in cattle, swine, and day-old chicks. The supplemental NADA is approved as of July 13, 1994, and the regulations are amended in 21 CFR 522.313 to reflect the approval. The basis for approval is discussed in the freedom of information summary.

In accordance with the freedom of information provisions of part 20 (21 CFR part 20) and § 514.11(e)(2)(ii) (21 CFR 514.11(e)(2)(ii)), a summary of safety and effectiveness data and information submitted to support approval of this application may be seen in the Dockets Management Branch (HFA–305), Food and Drug Administration, rm. 1–23, 12420 Parklawn Dr., Rockville, MD 20857, between 9 a.m. and 4 p.m., Monday through Friday.

Under section 512(c)(2)(F)(iii) of the Federal Food, Drug, and Cosmetic Act (21 U.S.C. 360b(c)(2)(F)(iii)), this approval qualifies for 3 years of marketing exclusivity beginning July 13, 1994, because the application contains reports of new clinical or field investigations (other than bioequivalence or residue studies) essential to the approval of the application and conducted or sponsored by the applicant.

The agency has carefully considered the potential environmental effects of this action. FDA has concluded that the action will not have a significant impact on the human environment, and that an environmental impact statement is not required. The agency's finding of no significant impact and the evidence supporting that finding, contained in an environmental assessment, may be seen in the Dockets Management Branch (address above) between 9 a.m. and 4 p.m., Monday through Friday.

List of Subjects in 21 CFR Part 522

Animal drugs.

Therefore, under the Federal Food, Drug, and Cosmetic Act and under authority delegated to the Commissioner of Food and Drugs and redelegated to the Center for Veterinary Medicine, 21 CFR part 522 is amended as follows:

PART 522—IMPLANTATION OR INJECTABLE DOSAGE FORM NEW ANIMAL DRUGS

1. The authority citation for 21 CFR part 522 continues to read as follows:

Authority: Sec. 512 of the Federal Food, Drug, and Cosmetic Act (21 U.S.C. 360b).

2. Section 522.313 is amended by adding new paragraph (d)(4) to read as follows:

§ 522.313 Ceftiofur sterile powder for injection.

* * * * *

(d) * * *

(4) *Horses*—(i) *Amount.* 2.2 to 4.4 milligrams per kilogram (1.0 to 2.0 milligrams per pound) of body weight.

(ii) *Indications for use.* For treatment of respiratory infections in horses associated with *Streptococcus zooepidemicus.*

(iii) *Limitations.* For intramuscular use only. Treatment should be repeated every 24 hours, continued for 48 hours after clinical signs have disappeared, and should not exceed 10 days. A maximum of 10 milliliters should be administered per injection site. Not for use in horses intended for food. Do not use in animals previously found to be hypersensitive to the drug. Federal law restricts this drug to use by or on the order of a licensed veterinarian.

Dated: August 8, 1994.

Richard H. Teske,

Deputy Director, Premarket Review, Center for Veterinary Medicine.

[FR Doc. 94–19932 Filed 8–12–94, 8:45 am]

BILLING CODE 4160–01–F

DEPARTMENT OF THE TREASURY

Internal Revenue Service

26 CFR Parts 1 and 602

[TD 8560]

RIN 1545–AQ69

Consolidated Returns—Stock Basis and Excess Loss Accounts, Earnings and Profits, Absorption of Deductions and Losses, Joining and Leaving Consolidated Groups, Worthless Stock Loss, Nonapplicability of Section 357(c)

AGENCY: Internal Revenue Service (IRS), Treasury.

ACTION: Final regulations.

SUMMARY: This document contains final regulations amending the consolidated return investment adjustment system, including the rules for earnings and profits and excess loss accounts. The amendments delink the adjustments to stock basis from the adjustments to earnings and profits. Stock basis is adjusted under rules similar to the rules for adjusting the basis of partnership interests and stock in S corporations, and earnings and profits are adjusted under a separate, parallel system. Amendments are also made to the rules limiting absorption of a member's deductions and losses when it leaves a consolidated group, modifying the stock basis and earnings and profits of members in certain group structure changes, allocating a corporation's tax items for the year it joins or leaves a consolidated group, allowing a worthless stock loss deduction with respect to the stock of members, and applying section 357(c) to transactions between members.

DATES: These regulations are effective January 1, 1995.

For dates of applicability, see the "Effective dates" section under the **SUPPLEMENTARY INFORMATION** portion of the preamble.

FOR FURTHER INFORMATION CONTACT: Concerning the regulations relating to stock basis, excess loss accounts, and earnings and profits generally, absorption of deductions and losses, worthless stock loss and the nonapplicability of section 357(c), Steven B. Teplinsky, (202) 622–7770; concerning the regulations relating to group structure changes, Rose L. Williams (202) 622–7550; and concerning the regulations relating to the allocation of items for the year a corporation joins or leaves a group, Roy A. Hirschhorn, (202) 622–7770. (These numbers are not toll-free numbers.)

SUPPLEMENTARY INFORMATION:

A. Paperwork Reduction Act

The collections of information contained in these final regulations have been reviewed and approved by the Office of Management and Budget in accordance with the requirements of the Paperwork Reduction Act (44 U.S.C. 3504(h)) under control number 1545–1344. The estimated average annual burden per respondent is .6 hours.

Comments concerning the accuracy of this burden estimate and suggestions for reducing this burden should be sent to the Internal Revenue Service, Attn: IRS Reports Clearance Officer, PC:FP, Washington, DC 20224, and to the Office of Management and Budget, Attn: Desk Officer for the Department of the Treasury, Office of Information and Regulatory Affairs, Washington, DC 20503.

B. Background

This document contains final regulations for adjusting the stock basis and earnings and profits (E&P) of members of consolidated groups, and related rules.

Proposed regulations were issued in a Notice of Proposed Rulemaking published in the **Federal Register** on November 12, 1992. See 57 FR 53634. In addition to the originally scheduled public hearing, a second hearing was scheduled in a Notice of Additional Public Hearing on Proposed Regulations published in the **Federal Register** on November 23, 1992. See 57 FR 54957. In Notice 92–59, 1992–2 C.B. 386, the IRS delayed the repeal of the 30-day rules so that they would continue to apply to corporations becoming or ceasing to be members before February 15, 1993.

The IRS received many comments on the proposed regulations addressing both policy and technical matters, and held public hearings on December 18, 1992 and March 4, 1993. After consideration of the comments and the statements made at the hearings, the proposed regulations are adopted as modified by this Treasury decision. The modifications, as well as several comments and suggestions that are not adopted in the final regulations, are discussed below.

No inference is intended by the final regulations as to the operation of the current regulations.

C. The Proposed and Final Regulations

The final regulations retain the general approach of the proposed regulations, delinking stock basis adjustments from E&P adjustments and operating through uniform rules of general application rather than through mechanical rules. However, numerous changes have been made to clarify the regulations and to conform their style to that of other recent consolidated return regulations.

1. Delinking Stock Basis and E&P

The investment adjustment system of the current regulations requires an owning member (P) to adjust its basis in the stock of a subsidiary (S) to reflect S's current E&P (or E&P deficit). P's basis is also generally reduced by the amount of any dividend distributions by S to P. The adjustments have the effect of treating P and S as a single entity. To the extent E&P includes amounts such as tax-exempt interest income, the adjustments prevent the income from being taxed indirectly on the disposition of S's stock.

After S's E&P is taken into account by P in adjusting its basis in S's stock, the stock basis adjustment is taken into account to adjust P's own E&P. This adjustment ensures that S's E&P is taken into account by P for purposes of further stock basis adjustments if P is not the common parent, and for distributions by P to nonmembers.

The current regulations were adopted in 1966. It was appropriate at that time to link stock basis and E&P adjustments because the modifications to taxable income required to compute E&P were generally also necessary to compute stock basis. Differences between taxable income and E&P have substantially increased since 1966, however, and many changes in the rules for determining E&P are not appropriate to the determination of stock basis. The resulting confusion and conflict is evidenced by recent cases examining the investment adjustment system.

Section 1503(e) corrects many investment adjustment distortions resulting from the divergence of taxable income and E&P. It requires P to redetermine its basis in S's stock under modified rules at the time the stock is disposed of. The modifications eliminate the original rationale for a system linking stock basis to E&P. Moreover, because the modifications are not generally integrated into the investment adjustment regulations, significant complexity has resulted.

The proposed regulations comprehensively revise the investment adjustment system by delinking stock basis adjustments from E&P adjustments. Stock basis adjustments are determined by reference to a modified computation of S's taxable income, rather than to S's E&P. S's E&P continues to tier up to P, but under a separate E&P adjustment system. Separating the stock basis and E&P adjustment systems implements the intent of section 1503(e) and prevents policies specific to one system from distorting the other.

Some commentators argued that the current E&P-based system is simpler because it is familiar to practitioners, even though it requires taxpayers to determine investment adjustments first by reference to E&P, then by incorporating modifications under current regulations, and finally by incorporating modifications under the Code. These commentators contended that the effect of transactions on E&P was usually clear, and that changing the system resulted in more, rather than less, uncertainty. Most commentators, however, agreed that delinking stock basis and E&P is appropriate.

The E&P system is fundamentally concerned with measuring dividend paying capacity, while the investment adjustment system is concerned with measuring consolidated taxable income. The current system is overly complex because it provides different rules for different sources of E&P, the effect of many transactions on E&P is uncertain, and the E&P rules are already overridden by temporary consolidated return regulations and later enacted Code provisions. By contrast, proper investment adjustments for most subsidiaries under the proposed regulations generally will equal the change in the subsidiary's net asset basis for tax purposes during the period that it is a member.

One example of the distortions under the current regulations is the effect of S's unabsorbed loss on P's E&P. The positive investment adjustment for unabsorbed losses correctly prevents P's basis in S's stock from being reduced while the loss is carried over. However, because P's E&P is adjusted by the amount of the adjustment to P's basis in S's stock, the adjustment also has the effect of preventing P's E&P from reflecting S's loss even though the dividend paying capacity of the group has diminished. Thus, the proper timing of stock basis and E&P adjustments is in conflict. The distortion is increased if the amount of S's tax loss and E&P deficit do not correspond, and uncertainty is created if the loss has a special status.

Investment adjustments under the proposed regulations generally are based on items calculated annually and reflected in a taxpayer's tax return or permanent records, rather than on E&P items that may never have been calculated or recorded. Although the current regulations require taxpayers to adjust stock basis annually, annual E&P computations are otherwise generally unnecessary and commentators generally agree that most groups fail to make the adjustments annually. If stock basis adjustments are not determined until stock is to be disposed of, costly E&P studies are required to calculate items from prior periods for which records may no longer be available.

Even if S attempts to calculate its E&P annually for purposes of the current regulations, that calculation is subject to uncertainty in many cases despite the development over the years of a substantial body of E&P guidance. See, e.g., section 312(h) and §§ 1.312–10 and 1.312–11 (E&P allocations in corporate separations and reorganizations). New transactions and Code provisions continue to develop and require E&P guidance.

Because the proposed regulations delink stock basis and E&P determinations, the policies influencing

the development of E&P rules no longer affect the unrelated and potentially conflicting policies for stock basis adjustments. Section 1503(e) already mandates separate computations for purposes of adjusting stock basis and E&P, and the growing disparity between taxable income and E&P may preclude taxpayers from relying on E&P guidance in many instances. See, e.g., section 1503(e)(1)(B). Consequently, the best approach to the investment adjustment system is to begin the computation with taxable income or loss and make adjustments. Compare the systems for adjusting the basis of partnership interests (section 705) and stock in S corporations (section 1367).

The final regulations retain the approach of the proposed regulations. Investment adjustments are determined by reference to (i) taxable income or loss, (ii) tax-exempt income, (iii) noncapital, nondeductible expenses, and (iv) distributions.

2. Taxpayers' Ability To Override Specific Rules

Many of the proposed regulation sections begin with a general statement of the purposes of the section. Most commentators supported these statements. Commentators suggested that taxpayers should be able to use them to override specific rules (i) in general, (ii) if failure to override would result in duplicating items, (iii) if the taxpayer discloses the override in its return, or (iv) if the taxpayer receives an expedited ruling from the IRS expressly allowing the override (under procedures to be established). Some commentators suggested that the IRS should also have the authority to override specific rules in certain circumstances, and that the circumstances justifying an IRS override could be broader than those justifying a taxpayer override.

The proposed statements of purposes were intended to prevent the recurrence of historic problems associated with literal application of the consolidated return regulations, and they are retained in the final regulations. However, commentators expressed a diversity of views as to how the regulations could be interpreted to serve taxpayer purposes. Consequently, the final regulations do not authorize taxpayers to deviate from specific rules, except to prevent duplication of adjustments. For example, a negative stock basis adjustment is not made under section 301(c)(2) if the adjustment has already been taken into account under the final regulations.

The proposed regulations also contain statements describing rules of construction and identify factors to be weighed in making adjustments. Commentators requested that these statements and factors be clarified. The statements and factors are not retained in the final regulations because they merely restate generally applicable rules of construction. The final regulations remain subject to generally applicable rules of construction.

3. Negative Adjustments

In addition to reducing stock basis for tax losses, the proposed regulations reduce stock basis for noncapital, nondeductible amounts such as Federal income taxes, and for distributions. The IRS received numerous comments on specific applications of these adjustments, particularly the negative adjustments for expiring losses and for distributions of E&P from years when S was affiliated with P but filed separate returns.

The proposed regulations provide that noncapital, nondeductible expenses result in negative adjustments. Like positive adjustments for tax-exempt income, these negative adjustments are necessary to preserve the treatment of items under the Code. Similar treatment is required for certain direct, permanent adjustments to the basis of S's assets. For example, a reduction in the basis of S's assets under section 50(c) must be reflected by a corresponding reduction in P's basis in S's stock.

a. Expiring Losses

Many comments were received on the negative adjustment for the expiration of S's loss carryovers. Commentators generally agreed that losses arising while S is a member of the group should be treated as noncapital, nondeductible amounts in the year they expire, but disagreed with this treatment for losses that arose before S became affiliated with P.

For example, if P forms S with a $100 capital contribution and S generates a $60 net operating loss (NOL) carryover, P's basis in S's stock remains $100 under the proposed regulations. If the NOL subsequently expires under section 172, the expiration is a noncapital, nondeductible expense upon the expiration because S's loss is effectively disallowed at that time. P's basis in S's stock must be reduced to prevent the loss from effectively being preserved in the basis. Commentators generally agreed with this result, and it conforms to the results for partners and S corporation shareholders whose loss carryovers expire.

If instead P buys existing S stock for $100, and at that time S's assets have a $40 basis and value and S has a $60 NOL, many commentators argued that P's $100 cost basis in the S stock does not reflect the $60 NOL and that the NOL's subsequent expiration therefore should not reduce P's basis in the S stock (or should reduce basis only to a limited extent). No principles have been identified to distinguish an expiring NOL from other noncapital, nondeductible amounts that reduce P's basis in S's stock. Moreover, no meaningful distinction has been found between the case in which S has a separate built-in loss (in the form of the NOL) that corresponds to its built-in gain and the case in which S has no built-in loss or gain at the time of P's acquisition and S subsequently produces corresponding gain and an NOL that expires.

Some commentators acknowledged that, if S has a $60 NOL and $60 of corresponding built-in gain, as much as $21 of P's cost basis in S's stock may reflect the NOL (35% of $60), but suggested that much less than $21 is likely to be reflected, particularly if the use of the NOL is limited under section 382. These commentators suggested that the analysis should shift to determining possible after-tax benefits of the NOL to the P group that might be reflected in P's cost basis in S's stock (i.e., P's negative adjustment would be limited to the amount paid by P for the NOL—an amount not to exceed $21).

The final regulations do not adopt this suggestion. Determining after-tax amounts accurately is inherently complex. In addition, there is no apparent reason why adjustments for absorption of the NOL should differ from those for expiration of the NOL, or why subsequent positive adjustments for S's built-in gain should not also increase basis by only an after-tax amount. For example, although S's $60 built-in gain would be fully subject to tax following repeal of the *General Utilities* doctrine, commentators did not suggest that P's basis should be increased by only $39 for the gain (65% of $60, or $60 minus a $21 discount in the purchase price of the S stock to reflect the built-in tax).

Almost all commentators argued that a negative adjustment is inappropriate in some cases. For example, if P buys existing S stock for $40, and at that time S's assets have a $40 basis and value and S has a $60 NOL, commentators argued that the expiration of the NOL should not reduce P's basis in the S stock (to a $20 excess loss account) because P's $40 cost basis in the S stock does not reflect the $60 NOL.

Commentators identified the following general cases in which a negative adjustment may be warranted: (i) if S incurs the loss after P purchases

the S stock (because P's basis in the stock reflects an amount corresponding to the NOL); (ii) if P acquires S stock in a carryover basis transaction (because P may succeed to a prior shareholder's stock basis reflecting the NOL); and (iii) if P indirectly acquires S stock by purchasing S's parent (because the parent's basis in S's stock may reflect the NOL).

The proposed regulations do not predicate stock basis adjustments on presumptions as to whether amounts are already reflected in stock basis. Instead, they reflect the treatment under the Code of all changes in S's net asset basis while S is a member. Substantially altering this approach to take additional information into account would require significant modifications, including appraisals and tracing.

Nevertheless, the IRS and the Treasury Department believe that certain cases merit relief. For example, if P buys S's stock and S has a large NOL carryover subject to a section 382 limitation, expiration of the NOL could easily result in an unavoidable negative adjustment even though the NOL was of limited value. Solutions suggested by commentators included (i) never providing a negative adjustment (even if the NOL arises in P's group) because there is no tax benefit for the expiration, (ii) limiting the negative adjustment to $.35 for every $1 of NOL (based on the highest marginal tax rate), (iii) requiring a negative adjustment only if S becomes a member after the proposed regulations are finalized (or only if the NOL expires after the proposed regulations are finalized), (iv) limiting the negative adjustment to prevent it from reducing P's basis in S's stock below S's net asset basis immediately after the expiration, and (v) permitting P to waive S's NOL before S becomes a member (thereby preventing the NOL from expiring while P owns S).

The final regulations generally retain the proposed rule requiring a negative stock basis adjustment for expiring losses. However, the final regulations provide a special rule allowing an acquiring group to waive S's loss carryovers from separate return limitation years. In addition, if S became a member of a group before the effective date of the final regulations and had a loss carryover from a separate return limitation year at that time, a special rule provides that the group is not required to treat expiration of the loss carryover as a negative adjustment under this section (although if S becomes a member of a second group after the effective date and the loss carryover expires while S is a member of the second group, the special rule does not apply).

To more fully integrate expired losses into the investment adjustment system, the final regulations also add special rules treating expired loss carryovers as continuing to exist for purposes of determining whether a positive adjustment is permitted for cancellation of indebtedness income and whether an excess loss account must be taken into account because of S's worthlessness.

To waive a loss carryover, the final regulations require the group to identify the amount waived (or the amount not waived) in a statement filed with the group's consolidated return for the year S becomes a member. The group may waive any carryover that it chooses, and may waive amounts carried from different years. However, the final regulations do not permit groups to identify the waived amount (or the unwaived amount) through formulas. Comments are solicited as to whether the use of formulas should be permitted and as to any other rules that should be adopted in subsequent IRS guidance.

b. Adjustments for All Distributions

Because stock basis adjustments under the proposed regulations generally conform to changes in S's net asset basis, and S's distribution of $1 always decreases S's net asset basis by $1, the proposed regulations require that all distributions by S reduce P's basis in S's stock. By contrast, the current regulations do not reduce basis for distributions of E&P earned in affiliated, nonconsolidated years. Because the proposed rule is a significant change from current law, the proposed regulations require negative adjustments for distributions of this E&P only if the distribution is made after the proposed regulations are adopted.

Many commentators argued that no negative adjustment should be required for distributions by S of E&P from affiliated, nonconsolidated years. They viewed the approach of the current regulations as preferable because (i) no positive adjustment is made when the E&P is earned, (ii) sections 243 and 1502 were intended to reach comparable results for nonconsolidated and consolidated groups with respect to affiliated, nonconsolidated E&P, and section 243 allows a 100% dividends received deduction to nonconsolidated groups without a basis reduction, and (iii) section 1059 was intended by Congress to be the only source of additional basis reductions. Moreover, although taxpayers could avoid the proposed negative adjustment by making a distribution during the last separate return year, commentators maintained that the proposed negative adjustment was a trap for taxpayers unable or unwilling to make distributions before joining in a consolidated return.

Commentators advocated preserving the approach of the current regulations by providing an exception for distributions of E&P accumulated in affiliated, nonconsolidated years. Such an exception would require determining the amount of modified taxable income for investment adjustment purposes that corresponds to the E&P, and providing rules relating that income to the distributed E&P. Although section 301(e) already modifies the applicable E&P, additional modifications would be required to determine the modified taxable income under the proposed regulations for particular subsidiaries.

Preserving separate return treatment for distributions during consolidated return years is increasingly inappropriate as more distinctions are made under the Code and regulations between corporations filing separate and consolidated returns. The proposed regulations maintain the distinctions between separate and consolidated returns by effectively preserving the separate return double tax system for E&P not distributed in separate return years.

The absence of a negative adjustment under the current regulations appears to be based on a presumption that the distributed E&P is not reflected in stock basis. This presumption may be wrong if, for example, P purchases S's stock after the E&P economically accrues but before it is taken into account for Federal income tax purposes. To limit the negative adjustment would be inconsistent with the general approach of the regulations because it would require appraisals and tracing of E&P to provide different stock basis reductions depending on the nature of the distributed E&P.

Commentators also suggested that requiring a negative adjustment for distributions could be appropriate if the regulations also provided that P's basis in S's stock was automatically or electively adjusted in S's first consolidated return year to reflect S's E&P from affiliated, nonconsolidated years. Where taxpayers fail to make distributions in consolidated return years, however, the adjustment would have the effect of positive investment adjustments for earnings in separate return years even though the consolidated return rules do not generally apply to those years. This approach would have the effect of inappropriately applying a portion of

the consolidated return rules to periods for which separate returns are filed.

Accordingly, the final regulations retain the requirement of a negative stock basis adjustment for all distributions. However, S's stock basis is not reduced as a result of a distribution of E&P accumulated in separate return years, if the distribution is made in a tax year beginning before January 1, 1995 and the distribution does not cause a negative adjustment under the investment adjustment rules in effect at the time of the distribution.

4. Allocation of Adjustments

The proposed regulations provide limited rules for allocating stock basis adjustments to different shares of stock. Allocation issues arise if, for example, P owns less than all of S's stock, S has more than one class of stock, P's interest in S varies, or P has different bases in different blocks of S's stock.

The allocation rules of the proposed regulations are similar in effect to those of the current regulations. Under the proposed regulations, however, stock basis adjustments must be cumulatively redetermined whenever necessary to determine the tax liability of any person.

Most commentators agreed that the proposed allocation rules provide greater guidance than the current regulations. Commentators had mixed views on the proposed cumulative redetermination rule. Some stated that cumulative redeterminations are complex, but are nevertheless economically sound and appropriate. Others stated that taxpayers should not be required to redetermine their basis because the requirement is inconsistent with the proposed annual basis adjustment statement and imposes undue administrative difficulties on taxpayers. However, specific problems that would commonly result in undue difficulties were not identified.

The final regulations retain the allocation system of the proposed regulations, including the cumulative redetermination rule, but provide additional guidance for cumulative redeterminations. See "Annual reporting requirement," discussed at C.7. of this preamble, for the elimination of the annual reporting requirement.

5. Election to Reallocate Basis

The current regulations provide that if P disposes of S stock with an excess loss account, P may avoid including the excess loss account in income by electing to reduce its basis in any retained S stock or debt by an amount equal to the excess loss account. This election was substantially limited by section 1503(e)(4) and by recent amendments to the consolidated return regulations, and its remaining scope is unclear.

The proposed regulations eliminate the election. Negative adjustments (other than for distributions) are not allocated to preferred stock because of its similarity to debt, which receives no negative adjustments. S's losses should not be allocated to preferred shares until S is unable to satisfy their priority. S's ability to satisfy their priority can only be determined with appraisals, and the use of appraisals is contrary to the general approach of the regulations.

Commentators requested that the election be retained. The most common use of the election is where P holds both common and preferred stock of S, because all of S's negative adjustments are allocated to its common stock. The rationale for an election in these cases is to permit P to avoid income from an excess loss account in the common stock that may be attributable to P's investment in the preferred stock.

However, P's investment in S's preferred stock is distinct from its investment in common stock. If negative adjustments should not be initially allocated to the preferred stock (or reallocated on a cumulative redetermination), they should not effectively be reallocated to the preferred stock through an election.

In view of the limited scope of the election, the increased ability of the allocation rules to reflect economic interests, and the limitations on allocating negative adjustments to preferred stock, the final regulations continue the approach of the proposed regulations and eliminate the basis reallocation election of current law.

6. Anti-Avoidance Rules

The proposed investment adjustment regulations require overriding adjustments to carry out the purposes of the regulations if any person acts with a principal purpose to avoid the effect of the regulations, or uses the regulations to avoid the effect of any other provision of the consolidated return regulations. More specific rules are provided to take into account any difference between the basis and value of property transferred to (or from) S, and to continue making adjustments if a corporation becomes a nonmember. Commentators criticized the uncertainty caused by the proposed overriding adjustment rules.

Anti-avoidance rules are necessary if the regulations are to operate through uniform rules of general application that are subject to interpretation and juxtaposition with other rules. Because the purposes of the regulations are identified, taxpayers generally should be aware of inappropriate results. Limiting circumvention of the regulations through transactions having a principal purpose of avoidance is consistent with other recent consolidated return guidance and with regulations issued under Code provisions applicable to separate return taxpayers.

The final regulations retain the general approach of the proposed regulations but operate through a single rule. Many of the proposed examples are modified to reflect comments, and examples of permitted avoidance of the rules are added. In the new examples, all relevant aspects of the transactions take place under separate return rules, so that avoidance of the regulations is not inconsistent with the purposes of the regulations.

7. Annual Reporting Requirement

To ensure more accurate determinations of stock basis adjustments, the proposed regulations require that a statement be included in each year's return identifying the adjustments for that year. This annual reporting requirement was proposed because of the concern that most groups do not determine the amount of their investment adjustments annually as required by the current regulations and do not maintain adequate records to make accurate determinations at a later date. Ultimately, these groups determine stock basis through elaborate but often unreliable E&P studies performed in connection with a later stock disposition.

Commentators differed in their views on the proposed annual reporting requirement. While some agreed that the additional burden was worth the potential improvement in compliance with the annual adjustment requirement and in the accuracy of the adjustments, others contended that the information contained in the annual statements would not be useful. They asserted that (i) the reporting would be burdensome because it would be required for all subsidiaries even though many would never be disposed of, (ii) collecting information relevant only for future determinations of tax liability would do little to improve the accuracy of investment adjustments, and (iii) the lack of a noncompliance penalty would lead to noncompliance with the reporting requirement or to faulty reporting.

The final regulations do not retain the proposed annual reporting requirement. The elimination of the proposed reporting requirement does not,

however, reflect acceptance of the view that taxpayers need not make investment adjustments annually. There is continuing concern that investment adjustments often are not determined with reasonable accuracy, particularly in the case of long-held subsidiaries.

To increase the accuracy of investment adjustment determinations (and the ability to examine the group's returns based on those determinations), the final regulations expressly require taxpayers to maintain annual books and records necessary for accurate stock basis adjustments. This requirement is consistent with section 6001, which generally requires taxpayers to keep those records that the Secretary deems necessary to determine tax liability. Taxpayers are cautioned that they are subject to penalties for tax underpayments resulting from, among other things, negligence or substantial or gross misstatements of the adjusted basis of any property (including stock of subsidiaries). See, e.g., section 6662 (c), (e), and (h).

8. E&P Adjustments

a. General Rules

The proposed regulations tier up E&P directly from S to P under a system separate from, but parallel to, the stock basis adjustment system. By separating the two systems, the possibility of phantom E&P adjustments resulting from the stock basis rules is eliminated.

If S earns E&P in a consolidated return year, the E&P tiers up under the proposed regulations directly and is included in P's E&P. If S later distributes the E&P to P, P's E&P does not further increase because P's dividend income is offset by a decrease for the tier up of S's E&P reduction under section 312 from the distribution.

The proposed regulations generally did not intend to permit the complete elimination of S's E&P from affiliated, nonconsolidated years by offsetting P's dividend income with S's E&P reduction from the distribution. S's affiliated, nonconsolidated E&P was not included in P's E&P when earned (because no tier up occurs in affiliated, nonconsolidated years), and if it is not included in P's E&P when distributed, it would be eliminated entirely. Commentators questioned this result because it cannot be achieved under the Code if separate returns are filed and is inconsistent with both single entity and separate entity treatment of P and S.

Both the current and the proposed regulations permit E&P distributed by S to be eliminated if the E&P was earned in years before S became affiliated with P (SRLY E&P). Elimination of SRLY E&P is also possible under separate return rules. Because P generally has no negative stock basis adjustment for separate return distributions by S, P's E&P from the dividend ultimately may be offset by an E&P deficit (or less E&P) from a later disposition of S's stock. Whether the elimination of SRLY E&P is correct depends on the extent to which the E&P is already reflected in P's E&P. However, the elimination of affiliated, nonconsolidated E&P is incorrect.

The final regulations generally retain the approach of the proposed regulations. However, the final regulations provide additional rules to prevent the elimination of S's affiliated, nonconsolidated E&P by its distribution to P during a consolidated return year.

b. Dividend Stripping

Several rules of the proposed regulations limit P's ability to obtain unintended tax benefits by avoiding negative basis adjustments for certain distributions from S while claiming the dividends received deduction for the distributions. For example, (i) P takes into account S's distribution to which section 301 applies when P becomes entitled to the distribution (generally on the record date), (ii) S's E&P is eliminated immediately before S becomes a nonmember to the extent the E&P is reflected by another member under the proposed regulations, and (iii) if P succeeds another corporation as the common parent of a group, P's E&P is adjusted immediately after it becomes the new common parent to reflect the E&P of the former common parent.

The final regulations retain the approach of the proposed regulations. However, the final regulations apply the distribution entitlement rule for all Federal income tax purposes (not just for purposes of stock basis and E&P adjustments). Expansion of the rule is consistent in many respects with current § 1.1502–32(k).

Because the final regulations retain the proposed entitlement rule for all Federal income tax purposes, S's E&P is reduced at the time P becomes entitled to a distribution from S. Applying the entitlement rule for E&P purposes is consistent with its application for stock basis adjustments and is necessary to prevent distortions in the amount of S's E&P when S leaves the group.

For example, assume that S has $50 of E&P from separate return years and $30 of current consolidated return year E&P. If S distributes $30 to P before becoming a nonmember, this distribution is treated as being made out of consolidated E&P. Thus, S's consolidated E&P is reduced to $0 and S continues to have $50 of accumulated E&P as a nonmember. Applying the entitlement rule for E&P purposes ensures consistent results for any distribution to which P becomes entitled while S is a member. Otherwise, S's $30 of consolidated E&P would be eliminated under the final regulations when S becomes a nonmember, and its $50 of accumulated E&P would be reduced by the amount of the distribution (to $20) due to a delay of the dividend payment until after S becomes a nonmember.

In addition, the final regulations retain and clarify the current rules for making proper adjustments to E&P where the location of a member other than the common parent changes within the group.

c. Tax Sharing Agreements

The current and the proposed regulations permit groups to elect to treat as a tax liability any amounts owing from one member to another as compensation for the absorption of tax attributes. The proposed regulations also require compensating amounts to be reflected for purposes of determining stock basis adjustments. In response to comments, the final regulations permit groups to conform the determination of E&P to the amounts reflected in stock basis.

9. Circular Basis Adjustments

The "circular basis" provisions of the current regulations limit the use of S's deductions and losses to offset P's gain from the sale of S stock. Without these rules, the absorption of S's losses would reduce P's basis in S's stock under the stock basis adjustment rules and thereby correspondingly increase P's gain on the stock sale. Ultimately, S's losses could be completely absorbed without reducing the net amount of P's gain on the stock sale.

The proposed regulations generally restate and clarify the current rule, and continue to prevent S's losses from offsetting P's gain from the sale of S stock. The proposed regulations expand the current rule to prevent losses of S's wholly owned subsidiary from offsetting P's gain from the sale of S stock, because absorption of these losses similarly reduces the basis of S's stock and correspondingly increases P's gain.

Commentators suggested that the limitation be further expanded to include brother-sister cases. If P owns all of the stock of S1 and S2, the proposed regulations do not limit the use of S1's losses against P's gain from the sale of S2 stock or the use of S2's losses against P's gain from the sale of S1 stock. The final regulations do not extend the limitation because these

cases cannot readily be distinguished from cases to which commentators believe the rules should not apply, and from cases in which some taxpayers would be disadvantaged.

Assume that P owns the stock of S1 with a $100 basis and $100 value, and the stock of S2 with a $100 basis and $150 value. S1 has a $20 NOL and S2's assets have a $100 basis. In Year 1, P sells S2's stock at a $50 gain, S1's NOL offsets $20 of P's gain, and use of the NOL reduces P's basis in S1 from $100 to $80. In Year 2, P sells S1 at an additional $20 gain. The group's aggregate gain in Years 1 and 2 is $50, and S's NOL is effectively eliminated.

Although many commentators suggested that S1's NOL be limited if its stock is also sold in Year 1, none suggested that the NOL be limited if S1's stock is sold in a later year. In addition, none suggested that S1's NOL be limited in Year 1 if P causes S2 to sell its assets rather than selling the S2 stock.

The suggested extension of the current limitation would be unfavorable to P if, for example, P had a $120 basis in S1's stock and the $20 loss inherent in the S1 stock could not be deducted under § 1.1502–20. Extending the limitation would prevent the group from offsetting S1's NOL against S2's taxable income merely to preserve P's stock loss that will be disallowed.

The final regulations retain the proposed rules.

10. Group Structure Change Rules

The proposed regulations expand the rules of current temporary regulations for determining stock basis and E&P in certain group structure changes. For example, if P is the common parent and its shareholders form a holding company (H) by transferring their P stock to H in a transaction to which section 351 applies, the transaction is a group structure change and H's basis in the P stock is determined under the current regulations by reference to the net basis of P's assets (rather than the basis of P's former shareholders in their P stock). The proposed regulations expand the scope of the current rules by including group structure changes that involve recognition transactions and by requiring only a 50% continuity of shareholders (rather than 80%), because the existence of the group is preserved in these transactions.

Commentators criticized the expansion of the current rules. Some argued that the rules should not be extended to taxable transactions because those transactions do not represent a mere rearrangement of the group's structure. However, the extension is consistent with the general approach of the current regulations to preserving the group's identity, and taxable transactions are indistinguishable for this purpose from nonrecognition transactions that were preceded by taxable transactions.

Commentators also suggested that P's NOLs should be treated as additional basis in determining P's net asset basis. This approach was not followed in the proposed regulations because additional rules would have been required if an NOL could be duplicated in H's basis in P's stock (e.g., if the NOL is subject to limitation under section 382).

The final regulations retain the approach of the proposed regulations but, in response to comments, allow the group to waive any loss carryovers of the former common parent immediately before the group structure change. The waiver is intended to permit groups to avoid later negative adjustments to H's basis in P's stock from the expiration of the loss carryovers.

11. Elimination of the 30-day Rules

The proposed regulations (together with Notice 92–59) eliminate the 30-day rules under the current regulations for corporations becoming or ceasing to be members on or after February 15, 1993. The 30-day rules were intended to be rules of administrative convenience. However, they create numerous inconsistencies that are not easily resolved, can lead to substantial complexity, and create unintended tax planning opportunities.

Many problems are raised by the 30-day rules. The rules apply only for purposes of the consolidated return regulations and therefore may conflict with rules under the Code that rely on precise timing (e.g., the effective date of a statutory provision applicable to acquisitions, or the date of an ownership change under section 382 resulting from joining or leaving a group). The rules may result in anomalies (e.g., if an historic member liquidates within the first 30 days of the group's year, taxpayers may argue that the member could deconsolidate itself for the short year ending with the liquidation). The recast of the 30-day rules may conflict with other recasts under the Code (e.g., if P acquires S's stock in a section 338(g) transaction, accelerating the inclusion of S in the P group to before the qualified stock purchase is inconsistent with section 338 policy, which does not permit S's gain on the deemed asset sale to be included in the P group's return). The 30-day rules could affect the results of virtually any transaction between S and another member of the selling or buying group during the 30-day period (e.g., if S distributes a lower-tier member's stock to its parent before P's acquisition of S's stock, it is unclear whether the 30-day rules could cause S's distribution to be treated as made from the P group).

Several alternatives were considered in developing the proposed regulations, but each alternative presented additional problems. It is not feasible to apply the 30-day rules uniformly under the Code because of the many conflicts that arise whenever the ownership of S's stock is treated as other than where the benefits and burdens of stock ownership reside. Accordingly, the final regulations continue the approach of the proposed regulations, but eliminate the 30-day rules only for subsidiaries that become or cease to be members of consolidated groups on or after January 1, 1995.

To ameliorate the administrative burdens of eliminating the 30-day rules, the final regulations allow taxpayers to use new simplified rules for allocating items to the short period that the 30-day rules eliminate. The final regulations further simplify item allocations by permitting taxpayers to prorate a target's items for the month of its acquisition or disposition. Guidance is being considered that identifies circumstances in which a stock acquisition formally occurring on one date may be treated for all Federal income tax purposes as occurring as of another date, if the benefits and burdens of ownership are transferred on the other date.

12. Miscellaneous Changes

a. Intercompany Transaction Rules

The final regulations move certain basis rules from § 1.1502–31 to the related provisions in §§ 1.1502–13 and 1.1502–14. These changes were not included in the proposed regulations because they were to be more fully considered in connection with revisions to the intercompany transaction system. See CO–11–91, 59 FR 18011. No inference should be drawn from the relocation of these rules, which is now necessary because the proposed investment adjustment rules are being finalized before the proposed intercompany transaction rules.

b. Restoration of Excess Loss Accounts Due to Worthlessness

The final regulations provide an additional restoration provision related to S's worthlessness. Under the additional rule, P's excess loss account with respect to S's stock is restored if any member takes into account a deduction or loss for the uncollectibility of debt of S and S does not take into

account a corresponding amount of income or gain in determining consolidated taxable income.

c. Loss Disallowance

The final regulations make technical changes in § 1.1502–20. Most of these changes conform the rules to the revised investment adjustment system. For example, the final regulations remove § 1.1502–20(e)(3) Example 8 because it is no longer necessary under the revised investment adjustment system. The final regulations also remove § 1.1502–20(a)(5) Example 6(iii) because it incorrectly interprets § 1.267(f)–2T. Consideration will be given to relief under section 7805(b) for taxpayers adversely affected by the changes.

Commentators expressed concern that the statement of purposes set forth in the proposed investment adjustment rules had the effect of disallowing positive investment adjustments for S's built-in gains, so that its stock would be sold at an increased gain. The statement of purposes was not intended to have this effect and has been modified in the final regulations.

d. Amendments to the Basis Reduction Account

The current regulations originally provided that, if S became a nonmember but P continued to own S stock, P's basis in the stock would be reduced before S became a nonmember. This rule was intended to eliminate the dividend stripping potential created because P's basis in S's stock increases for S's E&P during consolidated return years but generally does not decrease for S's distributions to P after S becomes a nonmember.

Temporary consolidated return regulations were issued in 1988 to eliminate this adjustment. Under the temporary regulations, P's basis increases are not eliminated. Instead, P has a basis reduction account (BRA) in S's stock and reduces its basis in the stock to the extent P subsequently receives distributions from S not in excess of the BRA.

The final regulations replace this system with a simpler approach. However, the BRA continues to apply (together with the other consequences of S becoming a nonmember) if S becomes a nonmember before the final regulations are effective.

Commentators requested modifications to the BRA to eliminate anomalies. The proposed regulations did not modify the BRA because the approach of the proposed regulations to potential dividend stripping is inconsistent with the approach of the BRA, and the necessary corrections would have been complex and may have required amended returns for prior periods. For the same reasons, the final regulations do not amend the BRA rules for subsidiaries that ceased to be members before the final regulations are effective.

e. Becoming or Ceasing To Be a Member

Under the proposed regulations, if S becomes or ceases to be a member during the group's tax year, the periods ending and beginning with S's becoming or ceasing to be a member are separate tax years for all Federal income tax purposes. However, the proposed regulations provide an election for allocating S's nonextraordinary items of income, gain, deduction, loss, and credit between the group's year and S's separate return year. For this purpose, the proposed regulations identify extraordinary items that are not subject to this ratable allocation.

The final regulations continue the approach of the proposed regulations and, in response to comments, the list of extraordinary items not subject to the ratable allocation election is expanded. In response to comments, the final regulations also allow S's nonextraordinary items from the month that S becomes or ceases to be a member to be allocated ratably within the month.

The proposed regulations provide that S generally becomes a member or ceases to be a member at the end of the day on which its status as a member changes (rather than at a specific time during the day). In response to comments, the final regulations provide that transactions occurring on the day of the change, but after the event that results in the change, are treated as occurring at the beginning of the following day if they are properly allocable to the part of the day after the event.

f. Distributions

Under § 1.1502–14 of the current regulations, P recognizes no gain with respect to a distribution from S that is described in section 301(c)(3); instead, such a distribution contributes to an excess loss account in S's stock. The proposed intercompany transaction regulations fully address the treatment of these distributions and continue the treatment provided under current law. See CO–11–91, 59 FR 18011. Consequently, the proposed amendment to § 1.1502–80 providing for the nonapplicability of section 301(c)(3) is unnecessary and is not retained in these final regulations. The treatment under current law is therefore retained.

The final regulations also clarify that the negative stock basis adjustment for distributions applies to all amounts to which section 301 applies and all other amounts treated as dividends (e.g., under section 356(a)(2)).

13. Effective Dates

a. Disposition Approach

The final regulations generally apply to determinations and transactions in tax years beginning on or after January 1, 1995. Once the final regulations apply, stock basis and E&P are determined or redetermined as if the regulations had always been in effect. However, the final regulations are not taken into account for tax years beginning before January 1, 1995.

Among the reasons for adopting the disposition approach are: (i) it eliminates the need to perpetuate prior regulations to determine prior period adjustments (including the need for E&P studies required to make the determinations); (ii) it eliminates the need for transitional rules to prevent duplication or omission of items under the pre-1966, current, and final regulations; (iii) it incorporates the principles of section 1503(e)(1)(A), which would otherwise require stock basis modifications for periods since 1972; and (iv) it eliminates anomalies arising from the adoption in 1966 of the first complete stock basis adjustment system (e.g., the inability to reflect pre-1966 E&P in stock basis if the E&P is lost before a deemed dividend election).

The most frequently discussed alternative to the disposition approach is a "lock-in" approach, under which the new rules would apply only to adjustments arising after the effective date of the final regulations. Several commentators suggested using a lock-in approach, or a combination of approaches (e.g., permitting a group to apply the current rules for adjustments in prior years, provided S is sold within the next 3 to 5 years). Commentators cited concerns with the administrative burdens of recomputing prior period adjustments, preserving taxpayer expectations, and determining pre-1966 adjustments.

Many taxpayers will benefit from the elimination of anomalies under the new regulations, and some commentators requested an earlier effective date, at least on an elective basis (e.g., for determinations between the date the regulations were proposed and the date they are finalized).

Although a lock-in approach would avoid requiring groups to apply the new rules to prior period adjustments, and may protect taxpayer expectations, the IRS and the Treasury Department understand that few groups determine

their stock basis adjustments annually and therefore have any substantial expectation regarding stock basis before a stock disposition is contemplated. A lock-in approach cannot be applied without complex rules to prevent the duplication or omission of items that would result from inconsistencies between the current and proposed regulations. The lock-in approach is therefore inconsistent with the simplified general approach of the regulations. The final regulations retain the disposition approach of the proposed regulations.

The proposed regulations would have applied to basis determinations after the date of adoption of the final regulations. To give taxpayers advance notice of the final rules, and to avoid complexities from applying both the current and the final regulations in a single tax year, the final regulations apply to determinations in tax years beginning on or after January 1, 1995. For prior years for which information is incomplete (e.g., pre-1966 years), taxpayers should use reasonable methods to comply with the final regulations, based on available information, including income tax returns, financial statements and statements of retained earnings.

b. Elimination of the 30-day Rules

The proposed regulations, together with Notice 92–59, would have eliminated the 30-day rules effective February 15, 1993. In response to comments, the final regulations eliminate the 30-day rules for subsidiaries that become or cease to be members on or after January 1, 1995.

14. Commissioner's Permission To Deconsolidate

The current regulations generally authorize the Commissioner to grant all groups, or groups in a particular class, permission to discontinue filing consolidated returns if any provision of the Code or regulations has been amended and the amendment could have a substantial adverse effect.

Some commentators suggested that the proposed regulations warranted granting permission to deconsolidate because the effective date of the regulations is based on a disposition approach. Although permission to deconsolidate is rarely granted, guidance is anticipated to be issued on or before December 31, 1994, pursuant to which groups may receive permission to deconsolidate for their first taxable year beginning on or after January 1, 1995. Permission for a group to deconsolidate will only be granted, however, on a showing that the net effect of the final regulations on the group's consolidated tax liability is substantially adverse.

Special Analyses

It has been determined that this Treasury decision is not a significant regulatory action as defined in EO 12866. Therefore, a regulatory assessment is not required. It also has been determined that section 553(b) of the Administrative Procedure Act (5 U.S.C. chapter 5) and the Regulatory Flexibility Act (5 U.S.C. chapter 6) do not apply to these regulations, and, therefore, a Regulatory Flexibility Analysis is not required. Pursuant to section 7805(f) of the Internal Revenue Code, the notice of proposed rulemaking preceding these regulations was submitted to the Small Business Administration for comment on its impact on small business.

List of Subjects

26 CFR Part 1

Income taxes, Reporting and recordkeeping requirements.

26 CFR Part 602

Reporting and recordkeeping requirements.

Adoption of Amendments to the Regulations

Accordingly, 26 CFR Parts 1 and 602 are amended as follows:

PART 1—INCOME TAXES

Paragraph 1. The authority citation for Part 1 is amended by removing the entries for sections "1.1502–19", "1.1502–32(k)", "1.1502–32T", and "1.1502–80" and adding the following citations to read as follows:

Authority: 26 U.S.C. 7805 * * * Section 1.1502–11 also issued under 26 U.S.C. 1502. * * * Section 1.1502–19 also issued under 26 U.S.C. 301, 1502, and 1503. * * * Section 1.1502–31 also issued under 26 U.S.C. 1502. * * * Section 1.1502–32 also issued under 26 U.S.C. 301, 1502, and 1503. Section 1.1502–33 also issued under 26 U.S.C. 301, 1502, and 1503. * * * Section 1 1502–76 also issued under 26 U.S.C. 1502. * * * Section 1.1502–80 also issued under 26 U.S.C. 165, 304, and 1502. * * *

Par. 2. In the list below, for each location indicated in the left column, remove the language in the middle column, and add the language in the right column in its place.

Affected section	Remove	Add
1.167(c)–1(a)(5)	"and 1.1502–31"	", 1.1502–13, and 1.1502–14"
1.337(d)–1(a)(5) introductory text	"§§ 1.1502–32 and 1.1502–33(c)"	"§ 1.1502–32"
1.337(d)–2(c)(4) Example	§§ 1.1502–32 and 1.1502–33(c)"	"§ 1.1502–32"
1.469–1T(h)(7)	"1.1502–19(a)"	"1.1502–19"
1.1502–13(j) introductory text	", 1.1502–31,"	
1 1502–13(l)(2), Example (1)(i)	"under § 1.1502–31(a)"	
1 1502–13(m)(3), Example (3)(i)	"Under § 1.1502–31(a),"	
1.1502–13(o)(1)(i)	"1.1502–19(b)(2)"	"1.1502–19(c)(1) (ii) or (iii)"
1.1502–13(o)(1)(ii)	"1.1502–19(b)(2)"	"1.1502–19(c)(1) (ii) or (iii)"
1.1502–13(o)(2), Example (i)	"under § 1.1502–31(a)"	
1.1502–13(o)(2), Example (iii)	"1.1502–19(b)(2)(i)"	"1.1502–19"
1.1502–14(b)(3)(ii)	"1.1502–19(b)(2) (other than subdivision (ii) thereof)"	"1.1502–19(c)(1)(ii)(B) or (iii)"
1.1502–14(d)(3)(ii)	"1.1502–19(b)(2) (other than subdivision (ii) thereof)"	"1.1502–19(c)(1)(ii)(B) or (iii)"
1.1502–14(d)(4)(ii)(*b*)	"1.1502–19(b)(2) (other than subdivision (ii) thereof), determined without regard to § 1.1502–19(d) and (e)".	"1.1502–19(c)(1)(ii)(B) or (iii)"
1.1502–14(g)(1)(i)	"1.1502–19(b)(2)"	"1.1502–19(c)(1) (ii) or (iii)"
1.1502–14(g)(1)(ii)	"1.1502–19(b)(2)"	"1.1502–19(c)(1) (ii) or (iii)"
1.1502–14(g)(2), Example 1(ii)	"1.1502–19(b)(2)(i)"	"1.1502–19"
1.1502–43(a)(3)(ii)	"1.1502–33(c)(4)(ii)"	"1.1502–33(b)"
1.1502–43(a)(3)(iii)	"1.1502–33(c)(4)(i)(*b*)"	"1.1502–33(c)(1)"
1.1502–47(e)(4)(iii)(B)	"1.1502–19(b)(2)(vi)"	"1.1502–19(c)"

Affected section	Remove	Add
1.1502–75(d)(5)(viii)	"1.1502–32(b)(2)(iii)(c) and (c)(2)(iii)"	"1.1502–32(h)(5)"
1.1502–81T(a)	"1.1502–32(b)(1)"	"1.1502–32(b)"
1.1552–1(c)(2)	"paragraph (d)(3) of"	

Par. 3. Section 1.279–6 is amended by revising paragraph (b)(4) to read as follows:

§ 1.279–6 Application of section 279 to certain affiliated groups.

* * * * *

(b) * * *

(4) The basis of property in a transaction to which § 1.1502–13, § 1.1502–13T, § 1.1502–14, or § 1.1502–14T applies is the basis of the property determined under that section; and

* * * * *

Par. 4. Section 1.337(d)–1, paragraph (a)(5) is amended by removing paragraph (iii) of Example 8.

Par. 5. Section 1.1502–1 is amended by adding at the end of paragraph (a) a new sentence to read as follows:

§ 1.1502–1 Definitions.

(a) * * * Except as the context otherwise requires, references to a group are references to a consolidated group (as defined in paragraph (h) of this section).

* * * * *

Par. 6. Section 1.1502–11 is amended by revising paragraph (b) to read as follows:

§ 1.1502–11 Consolidated taxable income.

* * * * *

(b) *Elimination of circular stock basis adjustments*—(1) *In general.* If one member (P) disposes of the stock of another member (S), this paragraph (b) limits the use of S's deductions and losses in the year of disposition and the carryback of items to prior years. The purpose of the limitation is to prevent P's income or gain from the disposition of S's stock from increasing the absorption of S's deductions and losses, because the increased absorption would reduce P's basis (or increase its excess loss account) in S's stock under § 1.1502–32 and, in turn, increase P's income or gain. See paragraph (b)(3) of this section for the application of these principles to P's deduction or loss from the disposition of S's stock, and paragraph (b)(4) of this section for the application of these principles to multiple stock dispositions. See § 1.1502–19(c) for the definition of disposition.

(2) *Limitation on deductions and losses*—(i) *Determination of amount of limitation.* If P disposes of one or more shares of S's stock the extent to which S's deductions and losses for the tax year of the disposition (and its deductions and losses carried over from prior years) may offset income and gain is subject to limitation. The amount of S's deductions and losses that may offset income and gain is determined by tentatively computing taxable income (or loss) for the year of disposition (and any prior years to which the deductions or losses may be carried) without taking into account P's income and gain from the disposition.

(ii) *Application of limitation.* S's deductions and losses offset income and gain only to the extent of the amount determined under paragraph (b)(2)(i) of this section. To the extent S's deductions and losses in the year of disposition cannot offset income or gain because of the limitation under this paragraph (b), the items are carried to other years under the applicable provisions of the Internal Revenue Code and regulations as if they were the only items incurred by S in the year of disposition. For example, to the extent S incurs an operating loss in the year of disposition that is limited, the loss is treated as a separate net operating loss attributable to S arising in that year. The tentative computation does not affect the manner in which S's unlimited deductions and losses are absorbed or the manner in which deductions and losses of other members are absorbed. (If the amount of S's unlimited deductions and losses actually absorbed is less than the amount absorbed in the tentative computation, P's stock basis adjustments under § 1.1502–32 reflect only the amounts actually absorbed.)

(iii) *Examples.* For purposes of the examples in this paragraph (b), unless otherwise stated, P owns all of the only class of S's stock for the entire year, S owns no stock of lower-tier members, the tax year of all persons is the calendar year, all persons use the accrual method of accounting, the facts set forth the only corporate activity, all transactions are between unrelated persons, and tax liabilities are disregarded. The principles of this paragraph (b)(2) are illustrated by the following examples.

Example 1. Limitation on losses with respect to stock gain. (a) P has a $500 basis in S's stock. For Year 1, P has ordinary income of $30 (determined without taking P's gain or loss from the disposition of S's stock into account) and S has an $80 ordinary loss. P sells S's stock for $520 at the close of Year 1.

(b) To determine the amount of the limitation on S's loss under paragraph (b)(2)(i) of this section, and the effect under § 1.1502–32(b) of the absorption of S's loss or P's basis in S's stock, P's gain or loss from the disposition of S's stock is not taken into account. The group is tentatively treated as having a consolidated net operating loss of $50 (P's $30 of income minus S's $80 loss). Thus, $50 of S's loss is limited under this paragraph (b).

(c) Because $30 of S's loss is absorbed in the determination of consolidated taxable income under paragraph (b)(2)(ii) of this section, P's basis in S's stock is reduced under § 1.1502–32(b) from $500 to $470 immediately before the disposition. Consequently, P recognizes a $50 gain from the sale of S's stock and the group has consolidated taxable income of $50 for Year 1 (P's $30 of ordinary income and $50 gain from the sale of S's stock, less the $30 of S's loss). In addition, S's limited loss of $50 is treated as a separate net operating loss attributable to S and, because S ceases to be a member, the loss is apportioned to S under § 1.1502–79 and carried to its first separate return year.

Example 2. Carrybacks and carryovers. (a) For Year 1, the P group has consolidated taxable income of $30, and a consolidated net capital loss of $100 ($50 attributable to P and $50 to S). At the beginning of Year 2, P has a $300 basis in S's stock. For Year 2, P has ordinary income of $30, and a $20 capital gain (determined without taking the $100 consolidated net capital loss carryover or P's gain or loss from the disposition of S's stock into account), and S has a $100 ordinary loss. P sells S's stock for $280 at the close of Year 2.

(b) To determine the amount of the limitation under paragraph (b)(2)(i) of this section on S's losses, and the effect of the absorption of S's losses on P's basis in S's stock under § 1.1502–32(b), P's gain or loss from the disposition of S's stock is not taken into account. For Year 2, the P group is tentatively treated as having a $70 consolidated net operating loss (S's $100 ordinary loss, less P's $30 of ordinary income). The P group is also treated as having no consolidated net capital gain in Year 2, because P's $20 capital gain is reduced by $20 of the consolidated net capital loss carryover from Year 1 under section 1212(a) (the absorption of which is attributed equally to P and S). In addition, of the $70 consolidated net operating loss, $30 is carried back to Year 1 and offsets P's ordinary income in that year, and $40 is carried forward. Consequently, $40 of S's operating loss from Year 2, and $40 of the consolidated net capital loss carryover from Year 1 attributable to S, are limited under this paragraph (b).

(c) Under paragraph (b)(2)(ii) of this section, the limitation under this paragraph (b) does not affect the absorption of any deductions and losses attributable to P, $60 of S's operating loss from Year 2, and $10 of the consolidated net capital loss from Year 1 attributable to S. Consequently, P's basis in S's stock is reduced under § 1.1502–32(b) by $70, from $300 to $230, and P recognizes a $50 gain from the sale of S's stock in Year 2. Thus, the P group is treated as having a $20 unlimited net operating loss that is carried back to Year 1

Ordinary income:	
P	$30
S (excluding the $40 limited loss)	(60)
Sub Total	$(30)
Consolidated net capital gain:	
P ($20 + $50 from S stock – $50 from Year 1)	$20
S (–$10 from Year 1)	(10)
Sub Total	$10
Consolidated taxable income	$(20)

(d) Under paragraph (b)(2)(ii) of this section, S's $40 ordinary loss from Year 2 that is limited under this paragraph (b) is treated as a separate net operating loss arising in Year 2. Similarly, $40 of the consolidated net capital loss from Year 1 attributable to S is treated as a separate net capital loss carried over from Year 1. Because S ceases to be a member, the $40 net operating loss from Year 2 and the $40 consolidated net capital loss from Year 1 are allocated to S under § 1.1502–79 and are carried to S's first separate return year.

Example 3. Allocation of basis adjustments. (a) For Year 1, the P group has consolidated taxable income of $100. At the beginning of Year 2, P has a $40 basis in each of the 10 shares of S's stock. For Year 2, P has an $80 ordinary loss (determined without taking into account P's gain or loss from the disposition of S's stock) and S has an $80 ordinary loss. P sells 2 shares of S's stock for $85 each at the close of Year 2.

(b) Under paragraph (b)(2)(i) of this section, the amount of the limitation on S's loss is determined by tentatively treating the P group as having a $160 consolidated net operating loss for Year 2. Of this amount, $100 is carried back under section 172 and absorbed in Year 1 ($50 attributable to S and $50 attributable to P). Consequently, $30 of S's loss is limited under this paragraph (b).

(c) Under paragraph (b)(2)(ii) of this section, the limitation under this paragraph (b) does not affect the absorption of P's $80 ordinary loss or $50 of S's ordinary loss. Consequently, P's basis in each share of S's stock is reduced from $40 to $35 under § 1.1502–32(b), and P recognizes a $100 gain from the sale of the 2 shares. Thus, the P group is treated as having a $30 unlimited net operating loss:

Ordinary loss:	
P	$(80)
S (excluding the $30 limited loss)	(50)
Sub Total	$(130)
Consolidated net capital gain.	
P	$100
S	0
Sub Total	$100
Unlimited consolidated net operating loss	$(30)

(d) A portion of the $130 of unlimited operating losses for Year 2 is fully absorbed in that year, and a portion is carried back to Year 1 Thus, $61.50 of P's $80 loss ($100 multiplied by $80/$130) and $38.50 of S's $50 unlimited loss ($100 multiplied by $50/$130) are absorbed in Year 2. P's remaining $18.50 of loss and S's remaining $11.50 of loss are not subject to limitation and are carried back and absorbed in Year 1

(e) Under paragraph (b)(2)(ii) of this section, S's $30 of loss limited under this paragraph (b) is treated as a separate net operating loss and, because S ceases to be a member, the loss is apportioned to S under § 1.1502–79 and carried to its first separate return year.

(3) *Loss dispositions*—(i) *General rule.* The principles of paragraph (b)(2) of this section apply to the extent necessary to carry out the purposes of paragraph (b)(1) of this section if P recognizes a deduction or loss from the disposition of S's stock.

(ii) *Example.* The principles of this paragraph (b)(3) are illustrated by the following example.

Example. (a) P has a $400 basis in S's stock. For Year 1, P has a capital gain of $100 (determined without taking P's gain or loss from the disposition of S's stock into account) and S has both a $60 capital loss and a $200 ordinary loss. P sells S's stock for $140 at the close of Year 1

(b) Under paragraph (b)(3) of this section, the amount of S's ordinary and capital losses that may offset income and gain is determined by tentatively computing the group's consolidated net operating loss and consolidated net capital loss without taking into account P's loss from the disposition of S's stock. The limitation is necessary to prevent P's loss from the disposition of S's stock from affecting the absorption of S's losses and thereby the adjustments to P's basis in S's stock under § 1 1502–32(b) (which would, in turn, affect P's loss).

(c) Under the principles of paragraph (b)(2)(i) of this section, the amount of the limitation on S's loss is determined by tentatively treating the P group as having a $40 consolidated net capital gain and a $200 ordinary loss, which results in a $160 consolidated net operating loss for Year 1, all of which is attributable to S. Thus, $160 of S's ordinary loss is limited under this paragraph (b). See also § 1.1502–20 for rules applicable to losses from the sale of stock of subsidiaries.

(4) *Multiple dispositions*—(i) *Stock of a member.* To the extent income, gain, deduction, or loss from a prior disposition of S's stock is deferred under any rule of law, the limitation under paragraph (b)(2) of this section is determined by treating the year the deferred amount is taken into account as the year of the disposition.

(ii) *Stock of different members.* If S is a higher-tier corporation with respect to another member (T), and all of T's items of income, gain, deduction, and loss (including the absorption of T's deduction or loss) would be fully reflected in P's basis in S's stock under § 1.1502–32, the limitation under paragraph (b)(2)(i) of this section with respect to T's deductions and losses is determined without taking into account any income, gain, deduction, or loss from the disposition of the stock of S or T (or of the stock of members owned in the chain connecting S and T). However, this paragraph (b) does not otherwise limit the absorption of one member's deduction or loss with respect to the disposition of another member's stock.

(iii) *Examples.* The principles of this paragraph (b)(4) are illustrated by the following examples.

Example 1 Chain of subsidiaries. (a) P owns all of S's stock with a $500 basis, and S owns all of T's stock with a $500 basis. For Year 1, P has ordinary income of $30, S has no income or loss, and T has an $80 ordinary loss. P sells S's stock for $520 at the close of Year 1

(b) Under paragraph (b)(4) of this section, to determine the amount of the limitation under paragraph (b) of this section on T's loss, and the effect of the absorption of T's loss on P's basis in S's stock under § 1.1502–32(b), P's gain or loss from the disposition of S's stock is not taken into account. The group is tentatively treated as having a consolidated net operating loss of $50 (P's $30 of income minus T's $80 loss). Because only $30 of T's loss offsets income or gain, P's basis in S's stock is reduced under § 1 1502–32(b) from $500 to $470 immediately before the disposition of S's stock. Thus, P takes into account a $50 gain from the sale of S's stock.

(c) The facts are the same as in paragraph (a) of this *Example 1*, except that S has a $10 excess loss account in T's stock (rather than a $500 basis). Under paragraph (b)(4) of this section, neither P's gain or loss from the disposition of S's stock nor S's gain or loss from the disposition of T's stock (under § 1 1502–19) are taken into account for purposes of the tentative computations and the effect of any absorption under § 1.1502–32(b) on P's basis in S's stock and S's excess loss account in T's stock. The group is tentatively treated as having a consolidated net operating loss of $50 (P's $30 of income minus T's $80 loss), and only $30 of T's loss may offset the group's income or gain. Under § 1 1502–32(b), the absorption of $30 of T's loss increases S's excess loss account in T's stock to $40 and, under § 1.1502–19, the excess loss account is taken into account. Moreover, under § 1 1502–32(b), P's basis in S's stock is increased immediately before the sale by $10 (S's $40 gain under § 1.1502–19(b) minus T's $30 loss absorbed and tiered up under § 1.1502–32(b)), from $500 to $510. Thus, P takes into account a $10 gain from the sale of S's stock, and S takes into account a $40 gain from its excess loss account in T's stock.

Example 2. Brother-sister subsidiaries. (a) P owns all of the stock of S1 and S2, each with a $50 basis. For Year 1, the group has a $100 consolidated net operating loss ($50 of which is attributable to S1, and $50 to S2) determined without taking gain or loss from the disposition of member stock into account. At the close of Year 1, P sells the stock of S1 and S2 for $100 each.

(b) Paragraph (b)(4) of this section does not limit the loss of S1 or S2 with respect to the disposition of stock of the other. Consequently, each subsidiary's loss may offset P's gain from the disposition of the stock of the other subsidiary. Because this absorption results in a $50 reduction in P's basis in the stock of each subsidiary under § 1.1502–32(b), P's aggregate gain from the stock dispositions is increased from $100 to $200, $100 of which is offset by the losses of the subsidiaries.

(5) *Effective date.* This paragraph (b) applies to stock dispositions occurring in consolidated return years beginning on or after January 1, 1995. For prior years, see § 1.1502–11(b) as contained in the 26 CFR part 1 edition revised as of April 1, 1994.

Par. 7. Section 1.1502–13 is amended as follows:

1. In paragraph (c)(1)(iii), the second sentence is removed.
2. Paragraph (c)(7) is redesignated as paragraph (c)(8).
3. New paragraph (c)(7) is added.
4. In paragraph (h), *Example* (17)(ii) is revised.
5. The added and revised provisions read as follows:

§ 1.1502–13 Intercompany transactions.

* * * * *

(c) * * *

(7) *Basis.* The basis of property acquired by a purchasing member in a deferred intercompany transaction is determined as if separate returns were filed. For example, if S owns property with an adjusted basis of $80 and sells it to P for $100 in a deferred intercompany transaction, P's basis in the property is $100 even though S defers its $20 gain on the sale under this paragraph (c).

* * * * *

(h) * * *

Example (17). * * *

(ii) P takes the entire $44,000 gain ($104,000 less $60,000) on the land into account for 1966 since the deferral and basis rules provided in paragraph (c) of this section were not effective with respect to the sale of such land.

* * * * *

Par. 8. Section 1.1502–14 is amended as follows:

1. Paragraph (a)(2) is revised.
2. Paragraph (a)(4) is redesignated as paragraph (a)(6).
3. New paragraph (a)(4) is added.
4. Paragraph (a)(5) is revised.
5. In newly designated paragraph (a)(6), the *Example* is amended by revising the last sentence.
6. New paragraph (b)(4) is added.
7. The revised and added provisions read as follows:

§ 1.1502–14 Stock, bonds, and other obligations of members.

(a) * * *

(2) *Nondividend distributions.* No gain is recognized to the distributee on a distribution with respect to stock, from one member to another member during a consolidated return year, which is described in section 301(c) (2) or (3). See §§ 1.1502–19 and 1.1502–32 for adjustments to stock basis (including negative adjustments in excess of basis).

* * * * *

(4) *Basis of property distributed in kind.* The basis of property received in a distribution to which section 301 applies is determined under section 301(d)(2)(B).

(5) *Entitlement rule*—(i) *In general.* This paragraph (a)(5)(i) applies for consolidated return years beginning on or after January 1, 1995. For all Federal income tax purposes, a distribution to which this paragraph (a) applies is treated as taken into account when the shareholding member becomes entitled to it (generally on the record date). For example, if the distributee member becomes entitled to a cash distribution before it is made, the distribution is treated as made when the distributee member becomes entitled to it. For this purpose, stock is treated as entitled to a distribution no later than the time the distribution is taken into account under the Code (e.g., under section 305). Appropriate adjustments must be made, as of the date the distribution was taken into account, if a distribution is not made.

(ii) *Minority shareholders.* If nonmembers own stock of the distributing corporation at the time the distribution is treated as occurring under paragraph (a)(5)(i) of this section, appropriate adjustments must be made to prevent acceleration of the members' portion of the distribution from affecting the earnings and profits consequences of distributions to nonmembers.

(iii) *Prior period distributions.* For rules relating to distributions before paragraph (a)(5)(i) of this section applies, see §§ 1.1502–14(a) (intercompany distributions generally) and 1.1502–32(k) (distributions declared before, but paid after, a stock disposition) as contained in the 26 CFR part 1 edition revised as of April 1, 1994.

(6) * * *

Example. * * * P's basis in the land is $6,000.

* * * * *

(b) * * *

(4) *Basis after liquidation or distribution.* The basis of property acquired in a transaction to which this paragraph (b) applies is determined as follows:

(i) *Section 332.* The basis of property acquired in a liquidation to which section 332 applies is determined as if separate returns were filed.

(ii) *Other liquidations and distributions.* This paragraph (b)(4)(ii) determines the aggregate basis of all property acquired in a distribution in cancellation or redemption of stock to which paragraph (b)(1) of this section applies, other than a liquidation to which section 332 applies. Once the amount of aggregate basis is determined, it is allocated among the assets received (except cash) in proportion to the fair market values of the assets on the date received. The aggregate amount of basis equals—

(A) The adjusted basis of the stock exchanged therefor (determined after taking into account the adjustments under § 1.1502–32); increased by

(B) The amount of any liabilities of the distributing corporation assumed by the distributee or to which the property acquired is subject; reduced by

(C) The amount of cash received in the distribution.

* * * * *

Par. 9. Section 1.1502–19 is revised to read as follows:

§ 1.1502–19 Excess loss accounts.

(a) *In general*—(1) *Purpose.* This section provides rules for a member (P) to include in income its excess loss account in the stock of another member (S). The purpose of the excess loss account is to recapture in consolidated taxable income P's negative adjustments with respect to S's stock (e.g., under § 1.1502–32 from S's deductions, losses, and distributions), to the extent the negative adjustments exceed P's basis in the stock.

(2) *Excess loss accounts*—(i) *In general.* P's basis in S's stock is adjusted under the consolidated return regulations and other rules of law. Negative adjustments may exceed P's basis in S's stock. The resulting negative amount is P's excess loss account in S's stock. For example:

(A) Once P's negative adjustments under § 1.1502–32 exceed its basis in S's stock, the excess is P's excess loss account in the S stock. If P has further adjustments, they first increase or decrease the excess loss account.

(B) If P forms S by transferring property subject to liabilities in excess of basis, § 1.1502–80(d) provides for the nonapplicability of section 357(c) and the resulting negative basis under section 358 is P's excess loss account in the S stock.

(ii) *Treatment as negative basis.* P's excess loss account is treated for all Federal income tax purposes as basis that is a negative amount, and a reference to P's basis in S's stock includes a reference to P's excess loss account.

(3) *Application of other rules of law.* The rules of this section are in addition to other rules of law. See, e.g., §§ 1.1502–32 (investment adjustment rules establishing and adjusting excess loss accounts) and 1.1502–80(d) (nonapplicability of section 357(c)). The provisions of this section and other rules of law must not be applied to recapture the same amount more than once. For purposes of this section, the definitions in § 1.1502–32 apply.

(b) *Excess loss account taken into account as income or gain*—(1) *General rule.* If P is treated under this section as disposing of a share of S's stock, P takes into account its excess loss account in the share as income or gain from the disposition. Except as provided in paragraph (b)(4) of this section, the disposition is treated as a sale or exchange for purposes of determining the character of the income or gain.

(2) *Nonrecognition or deferral*—(i) *In general.* P's income or gain under paragraph (b)(1) of this section is subject to any nonrecognition or deferral rules applicable to the disposition. For example, if S liquidates and the exchange of P's stock in S is subject to section 332, or P transfers all of its assets (including S's stock) to S in a reorganization to which section 361(a) applies, P's income or gain from the excess loss account is not recognized under these rules.

(ii) *Nonrecognition or deferral inapplicable.* If P's income or gain under paragraph (b)(1) of this section is from a disposition described in paragraph (c)(1) (ii) or (iii) of this section (relating to deconsolidations and worthlessness), the income or gain is taken into account notwithstanding any nonrecognition or deferral rules (even if the disposition is also described in paragraph (c)(1)(i) of this section). For example, if P transfers S's stock to a nonmember in a transaction to which section 351 applies, P's income or gain from the excess loss account is taken into account.

(3) *Tiering up in chains.* If the stock of more than one subsidiary is disposed of in the same transaction, the income or gain under this section is taken into account in the order of the tiers, from the lowest to the highest.

(4) *Insolvency*—(i) *In general.* Gain under this section is treated as ordinary income to the extent of the amount by which S is insolvent (within the meaning of section 108(d)(3)) immediately before the disposition. For this purpose S's liabilities include any amount to which preferred stock would be entitled if S were liquidated immediately before the disposition, and any former liabilities that were discharged to the extent the discharge was treated as tax-exempt income under § 1.1502–32(b)(3)(ii)(C) (special rule for discharges).

(ii) *Reduction for amount of distributions.* The amount treated as ordinary income under this paragraph (b)(4) is reduced to the extent it exceeds the amount of P's excess loss account redetermined without taking into account S's distributions to P to which § 1.1502–32(b)(2)(iv) applies.

(c) *Disposition of stock.* For purposes of this section:

(1) *In general.* P is treated as disposing of a share of S's stock:

(i) *Transfer, cancellation, etc.* At the time—

(A) P transfers or otherwise ceases to own the share for Federal income tax purposes, even if no gain or loss is taken into account; or

(B) P takes into account gain or loss (in whole or in part) with respect to the share.

(ii) *Deconsolidation.* At the time—

(A) P becomes a nonmember, or a nonmember determines its basis in the share (or any other asset) by reference to P's basis in the share, directly or indirectly, in whole or in part (e.g., under section 362); or

(B) S becomes a nonmember, or P's basis in the share is reflected, directly or indirectly, in whole or in part, in the basis of any asset other than member stock (e.g., under section 1071).

(iii) *Worthlessness.* At the time—

(A) Substantially all of S's assets are treated as disposed of, abandoned, or destroyed for Federal income tax purposes (e.g., under section 165(a) or § 1.1502–80(c), or, if S's asset is stock of a lower-tier member, the stock is treated as disposed of under this paragraph (c)). An asset of S is not considered to be disposed of or abandoned to the extent the disposition is in complete liquidation of S or is in exchange for consideration;

(B) An indebtedness of S is discharged, if any part of the amount discharged is not included in gross income and is not treated as tax-exempt income under § 1.1502–32(b)(3)(ii)(C); or

(C) A member takes into account a deduction or loss for the uncollectibility of an indebtedness of S, and the deduction or loss is not matched in the same tax year by S's taking into account a corresponding amount of income or gain from the indebtedness in determining consolidated taxable income.

(2) *Becoming a nonmember.* A member is treated as becoming a nonmember if it has a separate return year (including another group's consolidated return year). For example, S may become a nonmember if it issues additional stock to nonmembers, but S does not become a nonmember as a result of its complete liquidation. A disposition under paragraph (c)(1)(ii) of this section must be taken into account in the consolidated return of the group. For example, if a group ceases under § 1.1502–75(c) to file a consolidated return as of the close of its consolidated return year, the disposition under paragraph (c)(1)(ii) of this section is treated as occurring immediately before the close of the year. If S becomes a nonmember because P sells S's stock to a nonmember, P's sale is a disposition under both paragraphs (c)(1) (i) and (ii) of this section. If a group terminates under § 1.1502–75(d) because the common parent is the only remaining member, the common parent is not treated as having a deconsolidation event under paragraph (c)(1)(ii) of this section.

(3) *Exception for acquisition of group*—(i) *Application.* This paragraph (c)(3) applies only if a consolidated group (the terminating group) ceases to exist as a result of—

(A) The acquisition by a member of another consolidated group of either the assets of the common parent of the terminating group in a reorganization described in section 381(a)(2), or the stock of the common parent of the terminating group; or

(B) The application of the principles of § 1.1502–75(d)(2) or (d)(3).

(ii) *General rule.* Paragraph (c)(1)(ii) of this section does not apply solely by reason of the termination of a group in a transaction to which this paragraph (c)(3) applies, if there is a surviving group that is, immediately thereafter, a consolidated group. Instead, the surviving group is treated as the terminating group for purposes of applying this section to the terminating group. This treatment does not apply, however, to members of the terminating group that are not members of the surviving group immediately after the terminating group ceases to exist (e.g.,

under section 1504(a)(3) relating to reconsolidation, or section 1504(c) relating to includible insurance companies).

(d) *Special allocation of basis adjustments or determinations.* If a member has an excess loss account in shares of a class of S's stock at the time of a basis adjustment or determination under the Internal Revenue Code with respect to other shares of the same class of S's stock owned by the member, the adjustment or determination is allocated first to equalize and eliminate that member's excess loss account. For example, if P owns 50 shares of S's only class of stock with a $100 basis and 50 shares with a $100 excess loss account, and P contributes $200 to S without receiving additional shares, the contribution first eliminates P's excess loss account, then increases P's basis in each share by $1. (If P transfers the $200 in exchange for an additional 100 shares of S's stock in a transaction to which section 351 applies, P's excess loss account is first eliminated, and P's basis in the additional shares is $100.) See § 1.1502–32(c) for similar allocations of investment adjustments to prevent or eliminate excess loss accounts.

(e) *Anti-avoidance rule.* If any person acts with a principal purpose contrary to the purposes of this section, to avoid the effect of the rules of this section or apply the rules of this section to avoid the effect of any other provision of the consolidated return regulations, adjustments must be made as necessary to carry out the purposes of this section.

(f) *Predecessors and successors.* For purposes of this section, any reference to a corporation (or to a share of the corporation's stock) includes a reference to a successor or predecessor (or to a share of stock of a predecessor or successor), as the context may require.

(g) *Examples.* For purposes of the examples in this section, unless otherwise stated, P owns all of the only class of S's stock and S owns all of the only class of T's stock, the stock is owned for the entire year, T owns no stock of lower-tier members, the tax year of all persons is the calendar year, all persons use the accrual method of accounting, the facts set forth the only corporate activity, all transactions are between unrelated persons, and tax liabilities are disregarded. The principles of this section are illustrated by the following examples.

Example 1. Taxable disposition of stock. (a) *Facts.* P has a $150 basis in S's stock, and S has a $100 basis in T's stock. For Year 1, P has $500 of ordinary income, S has no income or loss, and T has a $200 ordinary loss. S sells T's stock to a nonmember for $60 at the close of Year 1.

(b) *Analysis.* Under paragraph (c) of this section, the sale is a disposition of T's stock at the close of Year 1 (the day of the sale). Under § 1.1502–32(b), T's loss results in S having a $100 excess loss account in T's stock immediately before the sale. Under paragraph (b)(1) of this section, S takes into account the $100 excess loss account as an additional $100 of gain from the sale. Consequently, S takes into account a $160 gain from the sale in determining the group's consolidated taxable income. Under § 1.1502–32(b), T's $200 loss and S's $160 gain result in a net $40 decrease in P's basis in S's stock as of the close of Year 1, from $150 to $110.

(c) *Intercompany sale followed by sale to nonmember.* The facts are the same as in paragraph (a) of this *Example 1*, except that S sells T's stock to P for $60 at the close of Year 1, and P sells T's stock to a nonmember at a gain at the beginning of Year 5. Under paragraph (c) of this section, S's sale is treated as a disposition of T's stock at the close of Year 1 (the day of the sale). Under § 1.1502–13 and paragraph (b)(2) of this section, S's $160 gain from the sale is deferred and taken into account in Year 5 as a result of P's sale of the T stock. Under § 1.1502–32(b), the absorption of T's $200 loss in Year 1 results in P having a $50 excess loss account in S's stock at the close of Year 1. In Year 5, S's $160 gain taken into account eliminates P's excess loss account in S's stock and increases P's basis in the stock to $110.

(d) *Intercompany distribution followed by sale to a nonmember.* The facts are the same as in paragraph (a) of this *Example 1*, except that the value of the T stock is $60 and S declares and distributes a dividend of all of the T stock to P at the close of Year 1, and P sells the T stock to a nonmember at a gain at the beginning of Year 5. Under paragraph (c) of this section, S's distribution is treated as a disposition of T's stock at the close of Year 1 (the day of the distribution). S's $100 excess loss account in T's stock is treated as additional gain under section 311(b) from the distribution. Under § 1.1502–14(a), P's basis in the T stock is $60. Under § 1.1502–14, § 1.1502–14T, and paragraph (b)(2) of this section, S's $160 gain from the distribution is deferred and taken into account in Year 5 as a result of P's sale of the T stock. Under § 1.1502–32(b), T's $200 loss and S's $60 distribution result in P having a $110 excess loss account in S's stock at the close of Year 1. In Year 5, S's $160 gain taken into account eliminates P's excess loss account in S's stock and increases P's basis in the stock to $50.

Example 2. Basis determinations under the Internal Revenue Code in intercompany reorganizations. (a) *Facts.* P owns all of the stock of S and T. P has a $150 basis in S's stock and a $100 excess loss account in T's stock. P transfers T's stock to S without receiving additional S stock, in a transaction to which section 351 applies.

(b) *Analysis.* Under paragraph (c) of this section, P's transfer is treated as a disposition of T's stock. Under section 351 and paragraph (b)(2) of this section, P does not recognize gain from the disposition. Under section 358 and paragraph (a)(2)(ii) of this section, P's $100 excess loss account in T's stock decreases P's $150 basis in S's stock to $50. In addition, S takes a $100 excess loss account in T's stock under section 362. (If P had received additional S stock, paragraph (d) of this section would not apply to shift basis from P's original S stock because the basis of the original stock is not adjusted or determined as a result of the contribution; but paragraph (d) would apply to shift basis if P had transferred S's stock to T in exchange for additional T stock, because the basis of the additional T stock would be determined when P has an excess loss account in its original T stock.)

(c) *Intercompany merger.* The facts are the same as in paragraph (a) of this *Example 2*, except that T merges into S in a reorganization described in section 368(a)(1)(A) (and in section 368(a)(1)(D)), and P receives no additional S stock in the reorganization. Under section 354 and paragraph (b)(2) of this section, P does not recognize gain. Under section 358 and paragraph (a)(2)(ii) of this section, P's $100 excess loss account in T's stock decreases P's $150 basis in the S stock to $50. (Similarly, if S merges into T and P does not receive additional T stock, P's $150 basis in S's stock eliminates P's excess loss account in T's stock, and increases P's basis in T's stock to $50.)

(d) *Liquidation of only subsidiary.* Assume instead that P and S are the only members of the P group, P has a $100 excess loss account in S's stock, and S liquidates in a transaction to which section 332 applies. Under paragraph (c)(2) of this section, the liquidation is not a deconsolidation event under paragraph (c)(1)(ii) of this section merely because P is the only remaining member. Under section 332 and paragraph (b)(2) of this section, P does not recognize gain. Under section 334(b), P succeeds to S's basis in the assets it receives from S in the liquidation. (P would also not recognize gain if P transferred all of its assets (including S's stock) to S in a reorganization to which section 361(a) applied, because S would be a successor to P under paragraph (f) of this section.)

Example 3. Section 355 distribution of stock with an excess loss account. (a) *Facts.* P has a $30 excess loss account in S's stock, and S has a $90 excess loss account in T's stock. S distributes the T stock to P in a transaction to which section 355 applies, and neither P nor S recognizes any gain or loss. At the time of the distribution, the T stock represents 33% of the value of the S stock. Following the distribution, P's basis in the S stock is allocated under § 1.358–2 in proportion to the fair market values of the S stock and the T stock.

(b) *Analysis.* Under paragraph (c) of this section, S's distribution of the T stock is treated as a disposition. Under section 355(c) and paragraph (b)(2) of this section, S does not recognize any gain from the distribution. Under section 358, S's excess loss account in the T stock is eliminated, and P's $30 excess loss account in the S stock is treated as basis allocated between the S stock and the T stock based on their relative values. Consequently, P has a $20 excess loss account in the S stock and a $10 excess loss account in the T stock.

(If P had a $30 basis rather than a $30 excess loss account in the S stock, S would not recognize gain, its excess loss account in the T stock would be eliminated, and P's basis in the stock of S and T would be $20 and $10, respectively.)

(c) *Section 355 distribution to nonmember.* The facts are the same as in paragraph (a) of this *Example 3*, except that P also distributes the T stock to its shareholders in a transaction to which section 355 applies. Under paragraph (c) of this section, P's distribution is treated as a disposition of T's stock. Under paragraph (b)(2) of this section, because P's disposition is described in paragraph (c)(1)(ii) of this section, P's $10 excess loss account in the T stock must be taken into account at the time of the distribution, notwithstanding the nonrecognition rules of section 355(c).

Example 4. Deconsolidation of a member. (a) *Facts.* P has a $50 excess loss account in S's stock, and S has a $100 excess loss account in T's stock. T issues additional stock to a nonmember and, as a consequence, T becomes a nonmember.

(b) *Analysis.* Under paragraph (c)(2) of this section, S is treated as disposing of T's stock immediately before T becomes a nonmember. Under paragraph (b)(1) of this section, S takes into account its $100 excess loss account as gain from the sale or exchange of T's stock. Under § 1.1502–32(b) of this section, S's $100 gain eliminates P's excess loss account in S's stock and increases P's basis in S's stock to $50.

(c) *Deconsolidation of a higher-tier member.* The facts are the same as in paragraph (a) of this *Example 4*, except that S (rather than T) issues the stock and, as a consequence, both S and T become nonmembers. Under paragraph (c)(2) of this section, P is treated as disposing of S's stock and S is treated as disposing of T's stock immediately before S and T become nonmembers. Under § 1.1502–32(b) and paragraph (b)(3) of this section, because S and T become nonmembers in the same transaction and T is the lower-tier member, S is first treated under paragraph (b)(1) of this section as taking into account its $100 excess loss account as gain from the sale or exchange of T's stock. Under § 1.1502–32(b), S's $100 gain eliminates P's excess loss account in S's stock and increases P's basis in S's stock to $50 immediately before S becomes a nonmember. Thus, only S's $100 gain is taken into account in the determination of the group's consolidated taxable income.

(d) *Intercompany gain and deconsolidation.* The facts are the same as in paragraph (c) of this *Example 4*, except that T has $30 of gain that is deferred under § 1.1502–13 and taken into account in determining consolidated taxable income immediately before T becomes a nonmember. Under § 1.1502–32(b), T's $30 gain decreases S's excess loss account in T's stock from $100 to $70 immediately before S is treated as disposing of T's stock. Under paragraph (b)(1) of this section, S is treated as taking into account its $70 excess loss account as gain from the disposition of T's stock. Under § 1.1502–32(b), S's $70 gain from the excess loss account and T's $30 deferred gain that is taken into account eliminate P's $50 excess loss account in S's stock and increase P's basis in S's stock to $50 immediately before S becomes a nonmember.

Example 5. Worthlessness. (a) *Facts.* P forms S with a $150 contribution, and S borrows $150. For Year 1, S has a $50 ordinary loss that is carried over as part of the group's consolidated net operating loss. For Year 2, P has $160 of ordinary income, and S has a $160 ordinary loss. Under § 1.1502–32(b), S's loss results in P having a $10 excess loss account in S's stock. During Year 3, the value of S's assets (without taking S's liabilities into account) continues to decline and S's stock becomes worthless within the meaning of section 165(g) (without taking into account § 1.1502–80(c)). For Year 4, S has $10 of ordinary income.

(b) *Analysis.* Under paragraph (c)(1)(iii)(A) of this section, P is not treated as disposing of S's stock in Year 3 solely because S's stock becomes worthless within the meaning of section 165(g) (taking S's liabilities into account). In addition, because S's stock is not treated as worthless, section 382(g)(4)(D) does not prevent the Year 1 consolidated net operating loss carryover from offsetting S's $10 of income in Year 4.

(c) *Discharge of indebtedness.* The facts are the same as in paragraph (a) of this *Example 5*, except that, instead of S's stock becoming worthless within the meaning of section 165(g), S's creditor discharges $40 of S's indebtedness during Year 3, S is insolvent by more than $40 before the discharge, the discharge is excluded from the P group's gross income under section 108(a), and $40 of the $50 consolidated net operating loss carryover attributable to S is eliminated under section 108(b). Under § 1.1502-32(b)(3)(ii)(C), S's $40 of discharge income is treated as tax-exempt income because there is a corresponding decrease under § 1.1502–32(b)(3)(iii) for elimination of the loss carryover. Under paragraph (c)(1)(iii)(B) of this section, P is treated as disposing of S's stock if the amount discharged is not included in gross income and is not treated as tax-exempt income under § 1.1502–32(b)(3)(ii)(C). Because the discharge is treated as tax-exempt income, P is not treated as disposing of S's stock by reason of the discharge.

Example 6. Avoiding worthlessness. (a) *Facts.* P forms S with a $100 contribution and S borrows $150. For Years 1 through 5, S has a $210 ordinary loss that is absorbed by the group. Under § 1.1502–32(b), S's loss results in P having a $110 excess loss account in S's stock. S defaults on the indebtedness, but the creditor does not discharge the debt (or initiate collection procedures). At the beginning of Year 6, S ceases any substantial operations with respect to the assets, but maintains their ownership with a principal purpose to avoid P's taking into account its excess loss account in S's stock.

(b) *Analysis.* Under paragraph (c)(1)(iii)(A) of this section, P's excess loss account ordinarily is taken into account at the time substantially all of S's assets are treated as disposed of, abandoned, or destroyed for Federal income tax purposes. Under paragraph (e) of this section, however, S's assets are not taken into account at the beginning of Year 6 for purposes of applying paragraph (c)(1)(iii)(A) of this section. Consequently, S is treated as worthless at the beginning of Year 6, and P's $110 excess loss account is taken into account.

(h) *Effective date*—(1) *Application.* This section applies with respect to determinations of the basis of (including an excess loss account in) the stock of a member in consolidated return years beginning on or after January 1, 1995. If this section applies, basis (and excess loss accounts) must be determined or redetermined as if this section were in effect for all years (including, for example, the consolidated return years of another consolidated group to the extent adjustments during those consolidated return years are still reflected). Any such determination or redetermination does not, however, affect any prior period.

(2) *Dispositions of stock before effective date*—(i) *In general.* If P was treated as disposing of stock of S in a tax year beginning before January 1, 1995 (including, for example, a deemed disposition because S was worthless) under the rules of this section then in effect, the amount of P's income, gain, deduction, or loss, and the stock basis reflected in that amount, are not redetermined under paragraph (h)(1) of this section. See paragraph (h)(3) of this section for the applicable rules.

(ii) *Intercompany amounts.* For purposes of this paragraph (h)(2), a disposition does not include a transaction to which § 1.1502–13, § 1.1502–13T, § 1.1502–14, or § 1.1502–14T applies. Instead, the transaction is deemed to occur as the income, gain, deduction, or loss (if any) is taken into account.

(3) *Prior law.* For prior determinations, see prior regulations under section 1502 as in effect with respect to the determination. See, e.g., § 1.1502–19 as contained in the 26 CFR part 1 edition revised as of April 1, 1994.

Par. 10. Section 1.1502–20 is amended as follows:

1. Paragraphs (a)(1) and (a)(3)(ii) are revised.

2. The last sentence of paragraph (a)(4) is removed.

3. The introductory text in paragraph (a)(5) is revised.

4. In paragraph (a)(5), paragraph (iii) in *Example 6* is removed.

5. The last sentence of paragraph (b)(4) is removed.

6. In paragraph (b)(6), the last sentence of paragraph (iv) in *Example 5* is revised.

7. Paragraphs (c)(1) (i) and (ii) are revised.

8. Paragraphs (c)(2)(i)(A)(*1*), (B), and (D) are revised.

9. The first sentence of the concluding text of paragraph (c)(2)(i) appearing immediately after paragraph (c)(2)(i)(D) is revised.

10. Paragraphs (c)(2) (ii) and (iii) are revised.

11. Paragraph (c)(2)(vii) is added.

12. Paragraph (c)(4) is amended as follows:

a. The heading for *Example 1* and paragraphs (ii) and (iii) of *Example 1* are revised.

b. *Example 2* is revised.

c. The fifth sentence of paragraph (i) of *Example 3* is revised.

d. Paragraphs (ii) and (iii) of *Example 3* are revised.

e. Paragraph (ii) of *Example 6* is revised.

f. *Example 7* is revised.

13. Paragraph (e)(3) is amended as follows:

a. *Example 1* is revised.

b. *Example 2* is amended by replacing the reference to "§ 1.267(f)–2T(d)(2)" in paragraph (ii) with "section 267(f)".

c. *Example 8* is removed.

14. Paragraph (f) is revised.

15. Paragraph (g)(3) is removed, and paragraph (g)(4) is redesignated as paragraph (g)(3).

16. Newly designated paragraph (g)(3) is amended by revising paragraphs (i) and (iii) of *Example 1*, paragraphs (i) and (iv) of *Example 2*, and paragraph (iv) of *Example 3*.

17. The added and revised provisions read as follows:

§ 1.1502–20 Loss disallowance.

(a) *Loss disallowance*—(1) *General rule.* No deduction is allowed for any loss recognized by a member with respect to the disposition of stock of a subsidiary. See also §§ 1.1502–15(b) (stock losses attributable to certain pre-1966 distributions) and 1.1502–80(c) (deferring the treatment of stock of members as worthless under section 165(g)).

* * * * *

(3) * * *

(ii) *Overriding events.* For purposes of paragraph (a)(3)(i) of this section, the following are overriding events:

(A) The stock ceases to be owned by a member of the consolidated group.

(B) The stock is canceled or redeemed (regardless of whether it is retired or held as treasury stock).

(C) The stock is treated as disposed of under § 1.1502–19(c)(1)(ii)(B) or (c)(1)(iii).

* * * * *

(5) *Examples.* For purposes of the examples in this section, unless otherwise stated, all corporations have only one class of stock outstanding, all groups file consolidated returns on a calendar-year basis, the facts set forth the only corporate activity, all transactions are between unrelated persons, and tax liabilities are disregarded. The basis of each asset is the same for determining earnings and profits adjustments and taxable income. References to the investment adjustment system are references to the rules of §§ 1.1502–19, 1.1502–32 and 1.1502–33. The principles of this paragraph (a) are illustrated by the following examples.

* * * * *

(b) * * *

(6) * * *

* * * * *

Example 5. * * *

(iv) * * * However, the subsequent deconsolidation of the T stock is an overriding event under paragraph (a)(3)(ii) of this section, and paragraph (a)(1) of this section applies to the loss immediately before the deconsolidation.

* * * * *

(c) * * *

(1) * * *

(i) *Extraordinary gain dispositions.* The amount of income or gain (or its equivalent), net of directly related expenses, that is allocated to the share from extraordinary gain dispositions.

(ii) *Positive investment adjustments.* The amount of the positive adjustment (if any) with respect to the share under § 1.1502–32 for each consolidated return year, but only to the extent the amount exceeds the amount described in paragraph (c)(1)(i) of this section for the year.

* * * * *

(2) * * *

(i) * * *

(A) * * *

(*1*) A capital asset as defined in section 1221 (determined without the application of any other rules of law).

* * * * *

(B) A positive section 481(a) adjustment.

* * * * *

(D) Any other event (or item) identified in guidance published in the Internal Revenue Bulletin.

An extraordinary gain disposition is taken into account under paragraph (c)(1)(i) of this section only if it occurs on or after November 19, 1990. * * *

(ii) *Positive investment adjustments.* For purposes of paragraph (c)(1)(ii) of this section, a positive adjustment under § 1.1502–32 is the sum of the amounts under § 1.1502–32(b)(2) (i) through (iii) for the consolidated return year (the adjustment determined without taking distributions into account). However, amounts included in any loss carryover are taken into account in the year they arise rather than the year absorbed.

(iii) *Applicable amounts.* Amounts are described in paragraphs (c)(1)(i) and (ii) of this section only to the extent they are reflected in the basis of the share, directly or indirectly, immediately before the disposition or deconsolidation. For this purpose, an amount is reflected in the basis of a share if the share's basis would have been different without the amount. However, amounts included in any loss carryover are taken into account in the year they arise rather than the year absorbed.

* * * * *

(vii) *Disallowance amounts applied only once.* The amounts described in paragraph (c)(1) of this section are not applied more than once to disallow a loss, reduce basis, or reattribute loss under this section.

* * * * *

(4) * * *

Example 1. Allowable loss attributable to lost built-in gain. * * *

(ii) The amount of the $100 loss disallowed under paragraph (a)(1) of this section may not exceed the amount determined under paragraph (c)(1) of this section. Under paragraphs (c)(2) (i) and (iii) of this section, T's $40 gain is from an extraordinary gain disposition and the amount is reflected in the basis of the T stock under § 1.1502–32 immediately before the disposition. Thus, the gain is described in paragraph (c)(1)(i) of this section. Because this amount is the only amount described in paragraph (c)(1) of this section, the amount of P's $100 loss that is disallowed under paragraph (a)(1) of this section is limited to $40. (No amount is described in paragraph (c)(1)(ii) of this section because the amount of T's positive investment adjustments does not exceed the amount included under paragraph (c)(1)(i) of this section.)

(iii) The results would be the same if the asset, instead of being owned by T, is owned by a partnership in which T is a partner and T is allocated the $40 of gain under section 704(b). Under paragraphs (c)(2) (i) and (iii) of this section, T's $40 gain is from an extraordinary gain disposition, and the gain is reflected in the basis of the T stock under § 1.1502–32 immediately before the disposition.

Example 2. Extraordinary gain dispositions. (i) Individual A forms T. P buys all the stock of T from A for $100 in Year 1, and T becomes a member of the P group. T owns a capital asset, asset 1, with a basis of $0 and a value of $100. T sells asset 1 for $100 in Year 1 and invests the proceeds in a trade or business asset, asset 2. For Year 2, asset 2 produces $30 of gross operating income and $20 of cost recovery deductions. On December 31 of Year 2, asset 2 has an $80 adjusted basis and T disposes of asset 2 for $85; however, because T incurs $20 of expenses directly related to the sale of asset

2, the disposition produces a $15 loss that is taken into account in the determination of taxable income or loss under § 1.1502–32(b)(2)(i) (the loss offsets T's $10 of operating income for Year 2, as well as $5 of operating income of P in that year). Under the investment adjustment system, P's basis in the T stock increases by $95, to $195, because T has $110 of income and a $15 loss. P sells the T stock for $95 in Year 5 and recognizes a $100 loss.

(ii) Under paragraphs (c)(2) (i) and (iii) of this section, the $100 gain from the disposition of asset 1 is from an extraordinary gain disposition and is reflected in the basis of the T stock. Thus, the gain is described in paragraph (c)(1)(i) of this section. The sale of asset 2 is not taken into account under paragraph (c)(1)(i) of this section because, net of directly related expenses, T does not have income or gain from the sale. (No amount is described under paragraph (c)(1)(ii) of this section because T's positive investment adjustments are taken into account under paragraph (c)(1)(i) of this section.) Because the $100 amount described under paragraph (c)(1)(i) of this section equals P's $100 loss from the disposition of the T stock, all of the loss is disallowed.

Example 3. * * * (i) * * * T invests the operating income in another asset that produces a $25 operating loss for Year 2. * * *

(ii) Under paragraph (c)(1)(ii) of this section, the $100 of income from Year 1 is a positive investment adjustment. The amount is not reduced by the $25 operating loss for Year 2. Because the $100 amount described under paragraph (c)(1)(ii) of this section equals S's $100 loss from the disposition of the T stock, all of the loss is disallowed.

(iii) Under paragraph (c)(2)(iv) of this section, the results would have been the same if, prior to the decline in the value of the first asset (the value of the T stock was $200, $100 cash and a $100 asset), S had sold the T stock to P for $200 at no gain or loss, and P then sold the T stock to an unrelated buyer for $75 (after the $100 decline in the value of the asset and the $25 operating loss) and recognized a $100 loss. T had $100 of income that resulted in a positive adjustment under the investment adjustment system and is reflected, within the meaning of paragraph (c)(2)(iii) of this section, in the basis of the T stock. The income and investment adjustments with respect to the T stock are not reduced or eliminated for purposes of paragraph (c)(1)(ii) of this section by reason of P's purchase of the stock, because P is a person related to S within the meaning of section 267(b).

* * * * *

Example 6. * * *

(ii) Although T has a $100 gain from extraordinary gain dispositions, the gain is not reflected in P's basis in the T stock within the meaning of paragraph (c)(2)(iii) of this section. P's basis reflects the stock's value at the time of P's purchase, and is determined without regard to whether T recognized the gain before the purchase. Thus, no part of T's gain is described in paragraph (c)(1) of this section, and no part of the $20 loss is disallowed under paragraph (a) of this section. (For rules that apply if A and P are related persons, see paragraph (c)(2)(iv) of this section.)

Example 7. Adjustments to stock basis under applicable rules of law. (i) Individual A forms T, and T's assets subsequently appreciate. T borrows $100 on a nonrecourse basis secured by the appreciated assets. P buys all of the stock of T from A for $150. After becoming a member of the P group, T has a $100 operating loss that is absorbed in the determination of consolidated taxable income and P's basis in the T stock is reduced to $50 under § 1.1502–32. Because T's assets have declined in value, T's creditors discharge $60 of T's indebtedness. The $60 discharge is not included in T's gross income under section 108(a), but no attributes are reduced under section 108(b).

(ii) Under paragraph (c)(2)(i) of this section, the discharge of indebtedness is an extraordinary gain disposition. Under § 1.1502–32(b)(3)(ii), however, the $60 discharge of indebtedness is not treated as tax-exempt income that increases P's basis in the T stock. Consequently, under paragraph (c)(2)(iii) of this section, T's discharge of indebtedness income is not reflected in P's basis in the T stock. Thus, there is no amount under paragraph (c)(1) of this section.

(iii) The facts are the same as in paragraph (i) of this *Example*, except that $60 of T's operating loss is not absorbed and is included in a consolidated net operating loss that is carried over under § 1.1502–21, and the $60 is eliminated from the carryover under section 108(b) as a result of T's discharge of indebtedness. The absorption of $40 of T's loss reduces P's basis in the T stock from $150 to $110. The $60 discharge of indebtedness is treated as tax-exempt income that increases P's basis in the T stock, and the $60 attribute reduction is treated as a noncapital, nondeductible expense that reduces P's basis in the T stock. Thus, P's basis in T's stock remains $110 following the discharge and attribute reduction. Because P's basis is $110, rather than $50, the discharge of indebtedness income is reflected in P's basis for purposes of paragraph (c)(2)(iii) of this section. Thus, the amount under paragraph (c)(1)(i) of this section is $60.

* * * * *

(e) * * *

(3) * * *

Example 1. Shifting of value. (i) P buys all the stock of T for $100, and T becomes a member of the P group. T has an asset with a basis of $0 and a value of $100. With the view described in paragraph (e)(1) of this section, P transfers land with a value of $100 to T in exchange for preferred stock with a $200 redemption price and liquidation preference. The $100 redemption premium (the excess of the $200 redemption price over the $100 issue price) ultimately increases the value of the preferred stock from $100 to $200 (and decreases the value of the common stock). T sells the built-in gain asset for $100, and P's aggregate basis in S's common and preferred stock increases to $300. In addition, as a result of a cumulative redetermination under § 1.1502–32(c)(4), P's basis in the T preferred stock increases from $100 to $200 and P's basis in the common stock remains $100. P subsequently sells the common stock at a loss.

(ii) Under section 305, the redemption premium is treated as a distribution of property to which section 301 applies. Under §§ 1.1502–14 and 1.1502–32, P's aggregate basis in the preferred and common stock is unaffected by the deemed distributions.

(iii) P's loss on the sale of the common stock is disallowed under paragraph (e)(1) of this section. This disallowance prevents the preferred stock from shifting value and stock basis adjustments from the common stock to avoid the disallowance of loss under this section.

* * * * *

(f) *No tiering up of certain adjustments*—(1) *General rule.* If the basis of stock of a subsidiary (S) owned by a another member (P) is reduced under this section on the deconsolidation of the S stock, no corresponding adjustment is made under § 1.1502–32 to the basis of the stock of P if there is a disposition or deconsolidation of the P stock in the same transaction. If there is a disposition or deconsolidation in the same transaction of less than all the stock of P, appropriate adjustments must be made under § 1.1502–32 with respect to P (and any higher-tier members).

(2) *Example.* The principles of this paragraph (f) are illustrated by the following example.

Example. (i) P, the common parent of a group, owns all the stock of S, S owns all the stock of S1, and S1 owns all the stock of S2. P's basis in the S stock is $100, S's basis in the S1 stock is $100, and S1's basis in the S2 stock is $100. In Year 1, S2 buys all the stock of T for $100. T has an asset with a basis of $0 and a value of $100. In Year 2, T sells the asset for $100. Under the investment adjustment system, the basis of each subsidiary's stock increases from $100 to $200. In Year 6, S sells all the stock of S1 for $100 to A, an individual, and recognizes a loss of $100. S1, S2, and T are not members of a consolidated group immediately after the sale because the new S1 group does not file a consolidated return for its first tax year.

(ii) Under paragraph (a)(1) of this section, no deduction is allowed to S for its loss from the sale of the S1 stock. Under § 1.1502–32(b)(3)(iii), S's disallowed loss is treated as a noncapital, nondeductible expense for Year 6 that reduces P's basis in the S stock. (Under § 1.1502–33, S's earnings and profits for Year 6 are reduced by the amount of S's disallowed loss for earnings and profits purposes and, under § 1.1502–33(b), this reduction is reflected in P's earnings and profits.)

(iii) Under paragraphs (b)(1) and (f)(1) of this section, because the stock of T and S2 are deconsolidated as a result of S's sale of the S1 stock, the basis of their stock must be reduced immediately before the sale from $200 to $100 (the value immediately before the deconsolidation). Under § 1.1502–32(b)(3)(iii), the basis reductions are treated

as noncapital, nondeductible expenses for Year 6. Under paragraph (f)(2) of this section, however, because the S2 stock is deconsolidated in the same transaction, the basis reduction to the T stock does not tier up under § 1.1502–32(a)(3). Similarly, because the S1 stock is disposed of in the same transaction, the basis reduction to the S2 stock also does not tier up. (Comparable treatment applies for purposes of earnings and profits under § 1.1502–33.)

(g) * * *

(3) * * *

Example 1. * * * (i) P, the common parent of a group, forms S with a $100 contribution. For Year 1, S has a $60 operating loss that is not absorbed and is included in the group's consolidated net operating loss that is carried over under § 1.1502–21. Under § 1.1502–32(b)(3)(i), P's basis in the S stock is not reduced to reflect S's loss because the loss is not absorbed. Under § 1.1502–33(b), S's deficit in earnings and profits is reflected in P's earnings and profits even though the loss is not absorbed for tax purposes. During Year 2, S's remaining assets appreciate in value and P sells the S stock for $55. But for an election to reattribute losses under paragraph (g) of this section, P would have a $45 loss from the sale that would be disallowed.

* * * * *

(iii) Under § 1.1502–32(b)(3)(iii), the reattribution of $45 of loss is a noncapital, nondeductible expense that reduces P's basis in the S stock from $100 to $55 immediately before the disposition. Consequently, P does not recognize any gain or loss from the disposition.

* * * * *

Example 2. * * * (i) P, the common parent of a group, forms S with a $100 contribution. S then forms T with a $40 contribution and T borrows $60. For Year 1, S has a $30 operating loss and T has a $55 operating loss. The losses are not absorbed and are included in the group's consolidated net operating loss that is carried over under § 1.1502–21. Under § 1.1502–32(b)(3)(i), P's basis in the S stock, and S's basis in the T stock, are not reduced to reflect the S and T losses because the group is unable to absorb the losses. (Under § 1.1502–33(b), the deficits in earnings and profits of S and T are tiered up for earnings and profits purposes even though not absorbed for tax purposes.) During Year 2, P sells the S stock for $30 ($100 invested, minus S's $30 loss and $40 unrealized loss from its investment in the T stock). But for an election to reattribute losses under paragraph (g) of this section, P would have a $70 loss from the sale, which would be disallowed.

* * * * *

(iv) Under § 1.1502–32(b)(3)(iii), the reattribution of loss is a noncapital, nondeductible expense that reduces P's basis in the S stock to $60 immediately before the disposition. Consequently, P recognizes only a $30 loss from the disposition of its S stock ($30 sale proceeds and $60 basis), and this loss is disallowed.

Example 3. * * *

(iv) Under § 1.1502–32(b)(3)(iii), the reattribution of loss is a noncapital, nondeductible expense that reduces P's basis in the S stock to $60 immediately before the disposition. Consequently, P recognizes no gain or loss from the disposition of its S stock. For P's treatment of the $40 reattributed loss, see § 1.1502–1(f).

* * * * *

Par. 11. Section 1.1502–31 is revised to read as follows:

§ 1.1502–31 Stock basis after a group structure change.

(a) *In general*—(1) *Overview.* If one corporation (P) succeeds another corporation (T) under the principles of § 1.1502–75(d) (2) or (3) as the common parent of a consolidated group in a group structure change, the basis of members in the stock of the former common parent (or the stock of a successor) is adjusted or determined under this section. See § 1.1502–33(f)(1) for the definition of group structure change. For example, if P owns all of the stock of another corporation (S), and T merges into S in a group structure change that is a reorganization described in section 368(a)(2)(D) in which P becomes the common parent of the T group, P's basis in S's stock must be adjusted to reflect the change in S's assets and liabilities. The rules of this section coordinate with the earnings and profits adjustments required under § 1.1502–33(f)(1), generally conforming the results of transactions in which the T group continues under § 1.1502–75 with P as the common parent. By preserving in P the relationship between T's earnings and profits and asset basis, these adjustments limit possible distortions under section 1502 (e.g., in the deconsolidation rules for earnings and profits under § 1.1502–33(e), and the continued filing requirements under § 1.1502–75(a)). This section applies whether or not T continues to exist after the group structure change.

(2) *Application of other rules of law.* The rules of this section are in addition to other rules of law. The provisions of this section and other rules of law must not have the effect of duplicating an amount in P's basis in S's stock.

(b) *General rules.* Except as otherwise provided in this section—

(1) *Asset acquisitions.* If a corporation acquires the former common parent's assets (and any liabilities assumed or to which the assets are subject) in a group structure change, the basis of members in the stock of the acquiring corporation is adjusted immediately after the group structure change to reflect the acquiring corporation's allocable share of the former common parent's net asset basis as determined under paragraph (c) of this section. For example, if S acquires all of T's assets in a group structure change that is a reorganization described in section 368(a)(2)(D), P's basis in S's stock is adjusted to reflect T's net asset basis. If P owned some of T's stock before the group structure change, the results would be the same because P's basis in the T stock is not taken into account in determining P's basis in S's stock. If T's net asset basis is a negative amount, it reduces P's basis in S's stock and, if the reduction exceeds P's basis in S's stock, the excess is P's excess loss account in S's stock. See § 1.1502–19 for rules treating P's excess loss account as negative basis, and treating a reference to P's basis in S's stock as including an excess loss account.

(2) *Stock acquisitions.* If a corporation acquires stock of the former common parent in a group structure change, the basis of the members in the former common parent's stock immediately after the group structure change (including any stock of the former common parent owned before the group structure change) is redetermined in accordance with the results for an asset acquisition described in paragraph (b)(1) of this section. For example, if all of T's stock is contributed to P in a group structure change to which section 351 applies, P's basis in T's stock is T's net asset basis, rather than the amount determined under section 362. Similarly, if S merges into T in a group structure change described in section 368(a)(2)(E), P's basis in T's stock is the basis that P would have in S's stock under paragraph (b)(1) of this section if T had merged into S in a group structure change described in section 368(a)(2)(D).

(c) *Net asset basis.* The former common parent's net asset basis is the basis it would have in the stock of a newly formed subsidiary, if—

(1) The former common parent transferred its assets (and any liabilities assumed or to which the assets are subject) to the subsidiary in a transaction to which section 351 applies;

(2) The former common parent and the subsidiary were members of the same consolidated group (see § 1.1502–80(d) for the non-application of section 357(c) to the transfer); and

(3) The asset basis taken into account is each asset's basis immediately after the group structure change (e.g., taking into account any income or gain recognized in the group structure change and reflected in the asset's basis).

(d) *Additional adjustments.* In addition to the adjustments in paragraph (b) of this section, the following adjustments are made:

(1) *Consideration not provided by P.* The basis is reduced to reflect the fair market value of any consideration not provided by the member. For example, if S acquires T's assets in a group structure change described in section 368(a)(2)(D), and S provides an appreciated asset (e.g., stock of P) as partial consideration in the transaction, P's basis in S's stock is reduced by the fair market value of the asset.

(2) *Allocable share—(i) Asset acquisitions.* If a corporation receives less than all of the former common parent's assets and liabilities in the group structure change, the former common parent's net asset basis taken into account under paragraph (b)(1) of this section is adjusted accordingly.

(ii) *Stock acquisitions.* If a corporation owns less than all of the former common parent's stock immediately after a group structure change described in paragraph (b)(2) of this section, the percentage of the former common parent's net asset basis taken into account equals the percentage (by fair market value) of the former common parent's stock owned immediately after the group structure change. For example, if P owns less than all of the former common parent's stock immediately after the group structure change, only an allocable part of the basis determined under this section is reflected in the shares owned by P (and the amount allocable to shares owned by nonmembers has no effect on the basis of their shares).

(3) *Allocation among shares of stock.* The basis determined under this section is allocated among shares under the principles of section 358. For example, if P owns multiple classes of the former common parent's stock immediately after the group structure change, only an allocable part of the basis determined under this section is reflected in the basis of each share. See § 1.1502–19(d), for special allocations with respect to excess loss accounts.

(4) *Higher-tier members.* To the extent that the former common parent is owned by members other than the new common parent, the basis of members in the stock of all subsidiaries owning, directly or indirectly, in whole or in part, an interest in the former common parent's assets or liabilities is adjusted in accordance with the principles of this section. The adjustments are applied in the order of the tiers, from the lowest to the highest.

(e) *Waiver of loss carryovers of former common parent*—(1) *General rule.* An irrevocable election may be made to treat all or any portion of a loss carryover attributable to the common parent as expiring for all Federal income tax purposes immediately before the group structure change. Thus, if the loss carryover is treated as expiring under the election, it will not result in a negative adjustment to the basis of P's stock under § 1.1502–32(b).

(2) *Election.* The election described in this paragraph (e) must be made in a separate statement entitled "ELECTION TO TREAT LOSS CARRYOVER AS EXPIRING UNDER § 1.1502–31(e)." The statement must be filed with the consolidated group's return for the year that includes the group structure change, and it must be signed by the former and the new common parent. The statement must identify the amount of each loss carryover deemed to expire (or the amount of each loss carryover deemed not to expire, with any balance of any loss carryovers being deemed to expire).

(f) *Predecessors and successors.* For purposes of this section, any reference to a corporation includes a reference to a successor or predecessor as the context may require. See § 1.1502–32(f) for definitions of predecessor and successor.

(g) *Examples.* For purposes of the examples in this section, unless otherwise stated, all corporations have only one class of stock outstanding, the tax year of all persons is the calendar year, all persons use the accrual method of accounting, the facts set forth the only corporate activity, all transactions are between unrelated persons, and tax liabilities are disregarded. The principles of this section are illustrated by the following examples.

Example 1. Forward triangular merger. (a) *Facts.* P is the common parent of one group and T is the common parent of another. T has assets with an aggregate basis of $60 and fair market value of $100 and no liabilities. T's shareholders have an aggregate basis of $50 in T's stock. In Year 1, pursuant to a plan, P forms S and T merges into S with the T shareholders receiving $100 of P stock in exchange for their T stock. The transaction is a reorganization described in section 368(a)(2)(D). The transaction is also a reverse acquisition under § 1.1502- 75(d)(3) because the T shareholders, as a result of owning T's stock, own more than 50% of the value of P's stock immediately after the transaction. Thus, the transaction is a group structure change under § 1.1502–33(f)(1), and P's earnings and profits are adjusted to reflect T's earnings and profits immediately before T ceases to be the common parent of the T group.

(b) *Analysis.* Under paragraph (b)(1) of this section, P's basis in S's stock is adjusted to reflect T's net asset basis. Under paragraph (c) of this section, T's net asset basis is $60, the basis T would have in the stock of a subsidiary under section 358 if T had transferred all of its assets and liabilities to the subsidiary in a transaction to which section 351 applies. Thus, P has a $60 basis in S's stock.

(c) *Pre-existing S.* The facts are the same as in paragraph (a) of this *Example 1*, except that P has owned the stock of S for several years and P has a $50 basis in the S stock before the merger with T. Under paragraph (b)(1) of this section, P's $50 basis in S's stock is adjusted to reflect T's net asset basis. Thus, P's basis in S's stock is $110 ($50 plus $60).

(d) *Excess loss account included in former common parent's net asset basis.* The facts are the same as in paragraph (a) of this *Example 1*, except that T has two assets, an operating asset with an $80 basis and $90 fair market value, and stock of a subsidiary with a $20 excess loss account and $10 fair market value. Under paragraph (c) of this section, T's net asset basis is $60 ($80 minus $20). See sections 351 and 358, and § 1.1502–19. Consequently, P has a $60 basis in S's stock. Under section 362 and § 1.1502–19, S has an $80 basis in the operating asset and a $20 excess loss account in the stock of the subsidiary.

(e) *Liabilities in excess of basis.* The facts are the same as in paragraph (a) of this *Example 1*, except that T's assets have a fair market value of $170 (and $60 basis) and are subject to $70 of liabilities. Under paragraph (c) of this section, T's net asset basis is ($10) ($60 minus $70). See sections 351 and 358, and §§ 1.1502–19 and 1.1502–80(d). Thus, P has a $10 excess loss account in S's stock. Under section 362, S has a $60 basis in its assets (which are subject to $70 of liabilities). (Under paragraph (a)(2) of this section, because the liabilities are taken into account in determining net asset basis under paragraph (c) of this section, the liabilities are not also taken into account as consideration not provided by P under paragraph (d)(1) of this section.)

(f) *Consideration provided by S.* The facts are the same as in paragraph (a) of this *Example 1*, except that P forms S with a $100 contribution at the beginning of Year 1, and during Year 6, pursuant to a plan, S purchases $100 of P stock and T merges into S with the T shareholders receiving P stock in exchange for their T stock. Under paragraph (b)(1) of this section, P's $100 basis in S's stock is increased by $60 to reflect T's net asset basis. Under paragraph (d)(1) of this section, P's basis in S's stock is decreased by $100 (the fair market value of the P stock) because the P stock purchased by S and used in the transaction is consideration not provided by P.

(g) *Appreciated asset provided by S.* The facts are the same as in paragraph (a) of this *Example 1*, except that P has owned the stock of S for several years, and the shareholders of T receive $60 of P stock and an asset of S with a $30 adjusted basis and $40 fair market value. S recognizes a $10 gain from the asset under section 1001. Under paragraph (b)(1) of this section, P's basis in S's stock is increased by $60 to reflect T's net asset basis. Under paragraph (d)(1) of this section, P's basis in S's stock is decreased by $40 (the fair market value of the asset provided by S). In addition, P's basis in S's stock is increased under § 1.1502–32(b) by S's $10 gain.

(h) *Depreciated asset provided by S.* The facts are the same as in paragraph (a) of this *Example 1*, except that P has owned the stock of S for several years, and the shareholders of T receive $60 of P stock and an asset of S with a $50 adjusted basis and $40 fair market value. S recognizes a $10 loss from the asset under section 1001. Under paragraph (b)(1) of this section, P's basis in S's stock is increased by $60 to reflect T's net asset basis. Under paragraph (d)(1) of this section, P's basis in S's stock is decreased by $40 (the fair market value of the asset provided by S). In addition, S's $10 loss is taken into account under § 1.1502–32(b) in determining P's basis adjustments under that section.

Example 2. Stock acquisition. (a) *Facts.* P is the common parent of one group and T is the common parent of another. T has assets with an aggregate basis of $60 and fair market value of $100 and no liabilities. T's shareholders have an aggregate basis of $50 in T's stock. Pursuant to a plan, P forms S and S acquires all of T's stock in exchange for P stock in a transaction described in section 368(a)(1)(B). The transaction is also a reverse acquisition under § 1.1502–75(d)(3). Thus, the transaction is a group structure change under § 1.1502–33(f)(1), and the earnings and profits of P and S are adjusted to reflect T's earnings and profits immediately before T ceases to be the common parent of the T group.

(b) *Analysis.* Under paragraph (d)(4) of this section, although S is not the new common parent of the T group, adjustments must be made to S's basis in T's stock in accordance with the principles of this section. Although S's basis in T's stock would ordinarily be determined under section 362 by reference to the basis of T's shareholders in T's stock immediately before the group structure change, under the principles of paragraph (b)(2) of this section, S's basis in T's stock is determined by reference to T's net asset basis. Thus, S's basis in T's stock is $60.

(c) *Higher-tier adjustments.* Under paragraph (d)(4) of this section, P's basis in S's stock is adjusted to $60 (to be consistent with the adjustment to S's basis in T's stock).

(d) *Cross ownership.* The facts are the same as in paragraph (a) of this *Example 2*, except that S has owned 10% of T's stock for several years and, pursuant to the plan, S acquires the remaining 90% of T's stock in exchange for P stock. The results are the same as in paragraphs (b) and (c) of this *Example 2*, because S's basis in the initial 10% of T's stock is redetermined under this section.

(e) *Allocable share.* The facts are the same as in paragraph (a) of this *Example 2*, except that P owns only 90% of S's stock immediately after the group structure change. S's basis in T's stock is the same as in paragraph (b) of this *Example 2*. Under paragraph (d)(2) of this section, P's basis in its S stock is adjusted to $54 (90% of S's $60 adjustment).

Example 3 Taxable stock acquisition. (a) *Facts.* P is the common parent of one group and T is the common parent of another. T has assets with an aggregate basis of $60 and fair market value of $100 and no liabilities. T's shareholders have an aggregate basis of $50 in T's stock. Pursuant to a plan, P acquires all of T's stock in exchange for $70 of P's stock and $30 in a transaction that is a group structure change under § 1.1502–33(f)(1). P's acquisition of T's stock is a taxable transaction. (Because of P's use of cash, the acquisition is not a transaction described in section 368(a)(1)(B).)

(b) *Analysis.* Under paragraph (b)(2) of this section, P's basis in T's stock is adjusted to reflect T's net asset basis. Thus, although P's basis in T's stock would ordinarily be a cost basis of $100, P's basis in T's stock under this section is $60.

(h) *Effective date*—(1) *General rule.* This section applies to group structure changes occurring in consolidated return years beginning on or after January 1, 1995.

(2) *Prior law.* For prior years, see prior regulations under section 1502 as in effect with respect to the transaction. See, e.g., § 1.1502–31T as contained in the 26 CFR part 1 edition revised as of April 1, 1994.

§ 1.1502–31T [Removed]

Par. 12. Section 1.1502–31T is removed.

Par. 13. Section 1.1502–32 is revised to read as follows:

§ 1.1502–32 Investment adjustments.

(a) *In general*—(1) *Purpose.* This section provides rules for adjusting the basis of the stock of a subsidiary (S) owned by another member (P). These rules modify the determination of P's basis in S's stock under applicable rules of law by adjusting P's basis to reflect S's distributions and S's items of income, gain, deduction, and loss taken into account for the period that S is a member of the consolidated group. The purpose of the adjustments is to treat P and S as a single entity so that consolidated taxable income reflects the group's income. For example, if P forms S with a $100 contribution, and S takes into account $10 of income, P's $100 basis in S's stock under section 358 is increased by $10 under this section to prevent S's income from being taken into account a second time on P's disposition of S's stock. Comparable adjustments are made for tax-exempt income and noncapital, nondeductible expenses that S takes into account, to preserve their treatment under the Internal Revenue Code.

(2) *Application of other rules of law.* The rules of this section are in addition to other rules of law. See, e.g., section 358 (basis determinations for distributees), section 1016 (adjustments to basis), § 1.1502–11(b) (limitations on the use of losses), § 1.1502–19 (treatment of excess loss accounts), § 1.1502–20 (additional rules relating to stock loss), and § 1.1502–31 (basis after a group structure change). P's basis in S's stock must not be adjusted under this section and other rules of law in a manner that has the effect of duplicating an adjustment. See also paragraph (h)(5) of this section for basis reductions applicable to certain former subsidiaries.

(3) *Overview*—(i) *In general.* The amount of the stock basis adjustments and their timing are determined under paragraph (b) of this section. Under paragraph (c) of this section, the amount of the adjustment is allocated among the shares of S's stock. Paragraphs (d) through (g) of this section provide definitions, an anti-avoidance rule, successor rules, and recordkeeping requirements.

(ii) *Excess loss account.* Negative adjustments under this section may exceed P's basis in S's stock. The resulting negative amount is P's excess loss account in S's stock. See § 1.1502–19 for rules treating excess loss accounts as negative basis, and treating references to stock basis as including references to excess loss accounts.

(iii) *Tiering up of adjustments.* The adjustments to S's stock under this section are taken into account in determining adjustments to higher-tier stock. The adjustments are applied in the order of the tiers, from the lowest to the highest. For example, if P is also a subsidiary, P's adjustment to S's stock is taken into account in determining the adjustments to stock of P owned by other members.

(b) *Stock basis adjustments*—(1) *Timing of adjustments*—(i) *In general.* Adjustments under this section are made as of the close of each consolidated return year, and as of any other time (an interim adjustment) if a determination at that time is necessary to determine a tax liability of any person. For example, adjustments are made as of P's sale of S's stock in order to measure P's gain or loss from the sale, and if P's interest in S's stock is not uniform throughout the year (e.g., because P disposes of a portion of its S stock, or S issues additional shares to another person), the adjustments under this section are made by taking into account the varying interests. An interim adjustment may be necessary even if tax liability is not affected until a later time. For example, if P sells only 50% of S's stock and S becomes a nonmember, adjustments must be made for the retained stock as of the disposition (whether or not P has an excess loss account in that stock). Similarly, if S liquidates during a consolidated return year, adjustments must be made as of the liquidation (even if the liquidation is tax free under section 332).

(ii) *Allocation of items.* If § 1.1502–76(b) applies to S for purposes of an adjustment before the close of the group's consolidated return year, the amount of the adjustment is determined under that section. If § 1.1502–76(b) does not apply to the interim adjustment, the adjustment is determined under the principles of § 1.1502–76(b), consistently applied, and ratable allocation under the principles of § 1.1502–76(b)(2)(ii) or (iii) may be used without filing an election under § 1.1502–76(b)(2). The principles would apply, for example, if P becomes a nonmember but S remains a member.

(2) *Amount of adjustments.* P's basis in S's stock is increased by positive adjustments and decreased by negative adjustments under this paragraph (b)(2). The amount of the adjustment, determined as of the time of the adjustment, is the net amount of S's—

(i) Taxable income or loss;

(ii) Tax-exempt income;

(iii) Noncapital, nondeductible expenses; and

(iv) Distributions with respect to S's stock.

(3) *Operating rules.* For purposes of determining P's adjustments to the basis of S's stock under paragraph (b)(2) of this section—

(i) *Taxable income or loss.* S's taxable income or loss is consolidated taxable income (or loss) determined by including only S's items of income, gain, deduction, and loss taken into account in determining consolidated taxable income (or loss), treating S's deductions and losses as taken into account to the extent they are absorbed by S or any other member. For this purpose:

(A) To the extent that S's deduction or loss is absorbed in the year it arises or is carried forward and absorbed in a subsequent year (e.g., under section 172, 465, or 1212), the deduction or loss is taken into account under paragraph (b)(2) of this section in the year in which it is absorbed.

(B) To the extent that S's deduction or loss is carried back and absorbed in a prior year (whether consolidated or separate), the deduction or loss is taken into account under paragraph (b)(2) of this section in the year in which it arises and not in the year in which it is absorbed.

(ii) *Tax-exempt income*—(A) *In general.* S's tax-exempt income is its income and gain which is taken into account but permanently excluded from its gross income under applicable law, and which increases, directly or indirectly, the basis of its assets (or an equivalent amount). For example, S's dividend income to which § 1.1502–14(a) applies, and its interest excluded from gross income under section 103, are treated as tax-exempt income. However, S's income not recognized under section 1031 is not treated as tax-exempt income because the corresponding basis adjustments under section 1031(d) prevent S's nonrecognition from being permanent. Similarly, S's tax-exempt income does not include gain not recognized under section 332 from the liquidation of a lower-tier subsidiary, or not recognized under section 118 or section 351 from a transfer of assets to S.

(B) *Equivalent deductions.* To the extent that S's taxable income or gain is permanently offset by a deduction or loss that does not reduce, directly or indirectly, the basis of S's assets (or an equivalent amount), the income or gain is treated as tax-exempt income and is taken into account under paragraph (b)(3)(ii)(A) of this section. In addition, the income and the offsetting item are taken into account under paragraph (b)(3)(i) of this section. For example, if S receives a $100 dividend with respect to which a $70 dividends received deduction is allowed under section 243, $70 of the dividend is treated as tax-exempt income. Accordingly, P's basis in S's stock increases by $100 because the $100 dividend and $70 deduction are taken into account under paragraph (b)(3)(i) of this section (resulting in $30 of the increase), and $70 of the dividend is also taken into account under paragraph (b)(3)(ii)(A) of this section as tax-exempt income (resulting in $70 of the increase). (See paragraph (b)(3)(iii) of this section if there is a corresponding negative adjustment under section 1059.) Similarly, income from mineral properties is treated as tax-exempt income to the extent it is offset by deductions for depletion in excess of the basis of the property.

(C) *Discharge of indebtedness income*—(*1*) *In general.* Discharge of indebtedness income of S that is excluded from gross income under section 108 is treated as tax-exempt income only to the extent the discharge is applied to reduce tax attributes (e.g., under section 108 or 1017). Discharge of S's indebtedness is treated as applied to reduce tax attributes only to the extent the attribute reduction is taken into account as a reduction under paragraph (b)(3)(iii) of this section.

(*2*) *Expired loss carryovers.* If the amount of the discharge exceeds the amount of the attribute reduction, the excess is nevertheless treated as applied to reduce tax attributes to the extent a loss carryover expired without tax benefit, the expiration was taken into account as a noncapital, nondeductible expense under paragraph (b)(3)(iii) of this section, and the loss carryover would have been reduced had it not expired.

(D) *Basis shifts.* An increase in the basis of S's assets (or an equivalent as described in paragraph (b)(3)(iv)(B) of this section) is treated as tax-exempt income to the extent that the increase is not otherwise taken into account in determining stock basis, it corresponds to a negative adjustment that is taken into account by the group under this paragraph (b) (or incurred by the common parent), and it has the effect (viewing the group in the aggregate) of a permanent recovery of the reduction. For example, S's basis increase under section 50(c)(2) is treated as tax-exempt income to the extent the preceding basis reduction under section 50(c)(1) is reflected in the basis of a member's stock. On the other hand, if S increases the basis of an asset as the result of an accounting method change, and the related positive section 481(a) adjustment is taken into account over time, the basis increase is not treated as tax-exempt income.

(iii) *Noncapital, nondeductible expenses*—(A) *In general.* S's noncapital, nondeductible expenses are its deductions and losses that are taken into account but permanently disallowed or eliminated under applicable law in determining its taxable income or loss, and that decrease, directly or indirectly, the basis of its assets (or an equivalent amount). For example, S's Federal taxes described in section 275 and loss not recognized under section 311(a) are noncapital, nondeductible expenses. Similarly, if a loss carryover (e.g., under section 172 or 1212) attributable to S expires or is reduced under section 108(b), it becomes a noncapital, nondeductible expense at the close of the last tax year to which it may be carried. However, if S sells and repurchases a security subject to section 1091, the disallowed loss is not a noncapital, nondeductible expense because the corresponding basis adjustments under section 1091(d) prevent the disallowance from being permanent.

(B) *Nondeductible basis recovery.* Any other decrease in the basis of S's assets (or an equivalent as described in paragraph (b)(3)(iv)(B) of this section) may be a noncapital, nondeductible expense to the extent that the decrease is not otherwise taken into account in determining stock basis and is permanently eliminated for purposes of determining S's taxable income or loss. Whether a decrease is so treated is determined by taking into account both the purposes of the Code or regulatory

provision resulting in the decrease and the purposes of this section. For example, S's noncapital, nondeductible expenses include any basis reduction under section 50(c)(1), section 1017, section 1059, § 1.1502–20(b), or § 1.1502–20(g). Also included as a noncapital, nondeductible expense is the amount of any gross-up for taxes paid by another taxpayer that S is treated as having paid (e.g., income included under section 78, or the portion of an undistributed capital gain dividend that is treated as tax deemed to have been paid by a shareholder under section 852(b)(3)(D)(ii), whether or not any corresponding amount is claimed as a tax credit). In contrast, a decrease generally is not a noncapital, nondeductible expense if it results because S redeems stock in a transaction to which section 302(a) applies, S receives assets in a liquidation to which section 332 applies and its basis in the assets is less than its basis in the stock canceled, or S distributes the stock of a subsidiary in a distribution to which section 355 applies.

(iv) *Special rules for tax-exempt income and noncapital, nondeductible expenses.* For purposes of paragraphs (b)(3)(ii) and (iii) of this section:

(A) *Treatment as permanent.* An amount is permanently excluded from gross income, or permanently disallowed or eliminated, if it is so treated by S even though another person may take a corresponding amount into account. For example, if S sells property to a nonmember at a loss that is disallowed under section 267(a), S's loss is a noncapital, nondeductible expense even though under section 267(d) the nonmember may treat a corresponding amount of gain as not recognized. (If the nonmember is a subsidiary in another consolidated group, its gain not recognized under section 267(d) is tax-exempt income under paragraph (b)(3)(ii)(A) of this section.)

(B) *Amounts equivalent to basis and adjustments to basis.* Amounts equivalent to basis include the amount of money, the amount of a loss carryover, and the amount of an adjustment to gain or loss under section 475(a) for securities described in section 475(a)(2). An equivalent to a basis increase includes a decrease in an excess loss account, and an equivalent to a basis decrease includes the denial of basis for taxable income.

(C) *Timing.* An amount is taken into account in the year in which it would be taken into account under paragraph (b)(3)(i) of this section if it were subject to Federal income taxation.

(D) *Tax sharing agreements.* Taxes are taken into account by applying the principles of section 1552 and the percentage method under § 1.1502–33(d)(3) (and by assuming a 100% allocation of any decreased tax liability). The treatment of amounts allocated under this paragraph (b)(3)(iv)(D) is analogous to the treatment of allocations under § 1.1552–1(b)(2). For example, if one member owes a payment to a second member, the first member is treated as indebted to the second member. The right to receive payment is treated as a positive adjustment under paragraph (b)(3)(ii) of this section, and the obligation to make payment is treated as a negative adjustment under paragraph (b)(3)(iii) of this section. If the obligation is not paid, the amount not paid generally is treated as a distribution, contribution, or both, depending on the relationship between the members.

(v) *Distributions.* Distributions taken into account under paragraph (b)(2) of this section are distributions with respect to S's stock to which section 301 applies and all other distributions treated as dividends (e.g., under section 356(a)(2)). See § 1.1502–14(a)(5) for taking into account distributions to which section 301 applies (but not other distributions treated as dividends) under the entitlement rule.

(4) *Waiver of loss carryovers from separate return limitation years*—(i) *General rule.* If S has a loss carryover from a separate return limitation year when it becomes a member of a consolidated group, the group may make an irrevocable election to treat all or any portion of the loss carryover as expiring for all Federal income tax purposes immediately before S becomes a member of the consolidated group (deemed expiration). If S was a member of another group immediately before it became a member of the consolidated group, the expiration is also treated as occurring immediately after it ceases to be a member of the prior group.

(ii) *Stock basis adjustments from a waiver*—(A) *Qualifying transactions.* If S becomes a member of the consolidated group in a qualifying cost basis transaction and an election under this paragraph (b)(4) is made, the noncapital, nondeductible expense resulting from the deemed expiration does not result in a corresponding stock basis adjustment for any member under this section. A qualifying cost basis transaction is the purchase (i.e., a transaction in which basis is determined under section 1012) by members of the acquiring consolidated group (while they are members) in a 12-month period of an amount of S's stock satisfying the requirements of section 1504(a)(2).

(B) *Nonqualifying transactions.* If S becomes a member of the consolidated group other than in a qualifying cost basis transaction and an election under this paragraph (b)(4) is made, the basis of its stock that is owned by members immediately after it becomes a member is subject to reduction under the principles of this section to reflect the deemed expiration. The reduction occurs immediately before S becomes a member, but after it ceases to be a member of any prior group, and it therefore does not result in a corresponding stock basis adjustment for any higher-tier member of the transferring or acquiring consolidated group. Any basis reduction under this paragraph (b)(4)(ii)(B) is taken into account in making determinations of basis under the Code with respect to S's stock (e.g., a determination under section 362 because the stock is acquired in a transaction described in section 368(a)(1)(B)), but it does not result in corresponding stock basis adjustments under this section for any higher-tier member. If the basis reduction exceeds the basis of S's stock, the excess is treated as an excess loss account to which the members owning S's stock succeed.

(C) *Higher-tier corporations.* If S becomes a member of the consolidated group as a result, in whole or in part, of a higher-tier corporation becoming a member (whether or not in a qualifying cost basis transaction), additional adjustments are required. The highest-tier corporation (T) whose becoming a member resulted in S becoming a member, and T's chain of lower-tier corporations that includes S, are subject to the adjustment. The deemed expiration of S's loss carryover that results in a negative adjustment for the first higher-tier corporation is treated as an expiring loss carryover of that higher-tier corporation for purposes of applying paragraph (b)(4)(ii)(B) of this section to that corporation. For example, if P purchases all of the stock of T, T owns all of the stock of T1, T1 owns all of the stock of S, S becomes a member as a result of T becoming a member, and the election under this paragraph (b)(4) is made, the basis of the S stock is reduced and the reduction tiers up to T1, T1 treats the negative adjustment to its basis in S's stock as an expiring loss carryover of T1, and T then adjusts its basis in T1's stock. In addition, if T becomes a member of the acquiring group in a transaction other than a qualifying cost basis transaction, the amount that tiers up to T also reduces the basis of its stock under paragraph (b)(4)(ii)(B) of this section (but the

amount does not tier up to higher-tier members).

(iii) *Net asset basis limitation.* Basis reduced under this paragraph (b)(4) is restored before S becomes a member (and before the basis of S's stock is taken into account in determining basis under the Code) to the extent necessary to conform a share's basis to its allocable portion of net asset basis. In the case of higher-tier corporations under paragraph (b)(4)(ii)(C) of this section, the restoration does not tier up but is instead applied separately to each higher-tier corporation. For purposes of determining each corporation's net asset basis (including the basis of stock in lower-tier corporations), the restoration is applied in the order of tiers, from the lowest to the highest. For purposes of the restoration:

(A) A member's net asset basis is the positive or negative difference between the adjusted basis of its assets (and the amount of any of its loss carryovers that are not deemed to expire) and its liabilities. Appropriate adjustments must be made, for example, to disregard liabilities that subsequently will give rise to deductions (e.g., liabilities to which section 461(h) applies).

(B) Within a class of stock, each share has the same allocable portion of net asset basis. If there is more than one class of common stock, the net asset basis is allocated to each class by taking into account the terms of each class and all other facts and circumstances relating to the overall economic arrangement.

(iv) *Election.* The election described in this paragraph (b)(4) must be made in a separate statement entitled "ELECTION TO TREAT LOSS CARRYOVER AS EXPIRING UNDER § 1.1502–32(b)(4)." The statement must be filed with the consolidated group's return for the year S becomes a member, and it must be signed by the common parent and S. A separate statement must be made for each member whose loss carryover is deemed to expire. The statement must identify the amount of each loss carryover deemed to expire (or the amount of each loss carryover deemed not to expire, with any balance of any loss carryovers being deemed to expire), the basis of any stock reduced as a result of the deemed expiration, and the computation of the basis reduction.

(5) *Examples*—(i) *In general.* For purposes of the examples in this section, unless otherwise stated, P owns all of the only class of S's stock, the stock is owned for the entire year, S owns no stock of lower-tier members, the tax year of all persons is the calendar year, all persons use the accrual method of accounting, the facts set forth the only corporate activity, preferred stock is described in section 1504(a)(4), all transactions are between unrelated persons, and tax liabilities are disregarded.

(ii) *Stock basis adjustments.* The principles of this paragraph (b) are illustrated by the following examples.

Example 1. Taxable income. (a) *Current taxable income.* For Year 1, the P group has $100 of taxable income when determined by including only S's items of income, gain, deduction, and loss taken into account. Under paragraph (b)(1) of this section, P's basis in S's stock is adjusted under this section as of the close of Year 1. Under paragraph (b)(2) of this section, P's basis in S's stock is increased by the amount of the P group's taxable income determined by including only S's items taken into account. Thus, P's basis in S's stock is increased by $100 as of the close of Year 1.

(b) *Intercompany gain that is not taken into account.* The facts are the same as in paragraph (a) of this *Example 1*, except that S also sells property to another member at a $25 gain in Year 1, the gain is deferred under § 1.1502–13 and taken into account in Year 3, and P sells 10% of S's stock to nonmembers in Year 2. Under paragraph (b)(3)(i) of this section, S's deferred gain is not additional taxable income for Year 1 or 2 because it is not taken into account in determining the P group's consolidated taxable income for either of those years. The deferred gain is not tax-exempt income under paragraph (b)(3)(ii) of this section because it is not permanently excluded from S's gross income. The deferred gain does not result in a basis adjustment until Year 3, when it is taken into account in determining the P group's consolidated taxable income. Consequently, P's basis in the S shares sold is not increased to reflect S's gain from the intercompany sale of the property. In Year 3, the deferred gain is taken into account, but the amount allocable to the shares sold by P does not increase their basis because these shares are held by nonmembers.

(c) *Intercompany gain taken into account.* The facts are the same as in paragraph (b) of this *Example 1*, except that P sells all of S's stock in Year 2 (rather than only 10%). Under § 1.1502–13, S takes the $25 gain into account immediately before S becomes a nonmember. Thus, P's basis in S's stock is increased to reflect S's gain from the intercompany sale of the property.

Example 2. Tax loss. (a) *Current absorption.* For Year 2, the P group has a $50 consolidated net operating loss when determined by taking into account only S's items of income, gain, deduction, and loss. S's loss is absorbed by the P group in Year 2, offsetting P's income for that year. Under paragraph (b)(3)(i)(A) of this section, because S's loss is absorbed in the year it arises, P has a $50 negative adjustment with respect to S's stock. Under paragraph (b)(2) of this section, P reduces its basis in S's stock by $50. Under paragraph (a)(3)(ii) of this section, if the decrease exceeds P's basis in S's stock, the excess is P's excess loss account in S's stock.

(b) *Interim determination from stock sale.* The facts are the same as in paragraph (a) of this *Example 2*, except that S's Year 2 loss arises in the first half of the calendar year, P sells 50% of S's stock on July 1 of Year 2, and P's income for Year 2 does not arise until after the sale of S's stock. P's income for Year 2 (exclusive of the sale of S's stock) is offset by S's loss, even though the income arises after the stock sale, and no loss remains to be apportioned to S. See §§ 1.1502–11 and 1.1502–79. Under paragraph (b)(3)(i)(A) of this section, because S's $50 loss is absorbed in the year it arises, it reduces P's basis in the S shares sold by $25 immediately before the stock sale. Because S becomes a nonmember, the loss also reduces P's basis in the retained S shares by $25 immediately before S becomes a nonmember. See also § 1.1502–20(b) (possible stock basis reduction on the deconsolidation of S).

(c) *Loss carryback.* The facts are the same as in paragraph (a) of this *Example 2*, except that P has no income or loss for Year 2, S's $50 loss is carried back and absorbed by the P group in Year 1 (offsetting the income of P or S), and the P group receives a $17 tax refund in Year 2 that is paid to S. Under paragraph (b)(3)(i)(B) of this section, because the $50 loss is carried back and absorbed in Year 1, it is treated as a tax loss for Year 2 (the year in which it arises). Under paragraph (b)(3)(ii) of this section, the refund is treated as tax-exempt income of S. Under paragraph (b)(3)(iv)(C) of this section, the tax- exempt income is taken into account in Year 2 because that is the year it would be taken into account under S's method of accounting if it were subject to Federal income taxation. Thus, under paragraph (b)(2) of this section, P reduces its basis in S's stock by $33 as of the close of Year 2 (the $50 tax loss, less the $17 tax refund).

(d) *Loss carryforward.* The facts are the same as in paragraph (a) of this *Example 2*, except that P has no income or loss for Year 2, and S's loss is carried forward and absorbed by the P group in Year 3 (offsetting the income of P or S). Under paragraph (b)(3)(i)(A) of this section, the loss is not treated as a tax loss under paragraph (b)(2) of this section until Year 3.

Example 3. Tax-exempt income and noncapital, nondeductible expenses. (a) *Facts.* For Year 1, the P group has $500 of consolidated taxable income. However, the P group has a $100 consolidated net operating loss when determined by including only S's items of income, gain, deduction, and loss taken into account. Also for Year 1, S has $80 of interest income that is permanently excluded from gross income under section 103, and S incurs $60 of related expense for which a deduction is permanently disallowed under section 265.

(b) *Analysis.* Under paragraph (b)(3)(i)(A) of this section, S has a $100 tax loss for Year 1. Under paragraph (b)(3)(ii)(A) of this section, S has $80 of tax-exempt income Under paragraph (b)(3)(iii)(A) of this section, S has $60 of noncapital, nondeductible expense. Under paragraph (b)(3)(iv)(C) of this section, the tax-exempt income and noncapital, nondeductible expense are taken into account in Year 1 because that is the year they would be taken into account under S's method of accounting if they were subject to Federal income taxation. Thus, under

paragraph (b) of this section, P reduces its basis in S's stock as of the close of Year 1 by an $80 net amount (the $100 tax loss, less $80 of tax-exempt income, plus $60 of noncapital, nondeductible expenses).

Example 4. Discharge of indebtedness. (a) *Facts.* P forms S on January 1 of Year 1 and S borrows $200. During Year 1, S's assets decline in value and the P group has a $100 consolidated net operating loss when determined by including only S's items of income, gain, deduction, and loss taken into account. None of the loss is absorbed by the group in Year 1, and S is discharged from $100 of indebtedness at the close of Year 1. Under section 108(a), S's $100 of discharge of indebtedness income is excluded from gross income because of insolvency. Under section 108(b), S's $100 net operating loss is reduced to zero at the close of Year 1.

(b) *Analysis.* Under paragraph (b)(3)(iii)(B) of this section, the reduction of the net operating loss is treated as a noncapital, nondeductible expense in Year 1 because the net operating loss is permanently disallowed by section 108(b). Under paragraph (b)(3)(ii)(C) of this section, all $100 of S's discharge of indebtedness income is treated as tax-exempt income in Year 1 because the discharge results in a $100 reduction to S's net operating loss. Consequently, the loss and the cancellation of the indebtedness result in no net adjustment to P's basis in S's stock under paragraph (b) of this section. (If the basis of assets were reduced under section 1017, rather than S's loss, the reduction would not occur until the beginning of Year 2 and the discharge would not be treated as tax-exempt income until that time.)

(c) *Insufficient attributes.* The facts are the same as in paragraph (a) of this *Example 4*, except that $70 of S's net operating loss is absorbed in Year 1, offsetting P's income for that year, and the indebtedness is discharged at the beginning of Year 2. Under paragraph (b) of this section, the $70 of S's loss absorbed in Year 1 reduces P's basis in S's stock by $70 as of the close of Year 1. Under section 108(a), S's discharge of indebtedness income in Year 2 is excluded from the P group's gross income because of insolvency. Under section 108(b), the remaining $30 of S's net operating loss carryover from Year 1 is reduced to zero at the close of Year 2. No other attributes are reduced. Under paragraph (b)(3)(iii)(B) of this section, the elimination of the remaining $30 net operating loss by section 108(b) is treated as a noncapital, nondeductible expense. Under paragraph (b)(3)(ii)(C) of this section, only $30 of the discharge is treated as tax-exempt income because only that amount is applied to reduce tax attributes. See also § 1.1502–19(c)(1)(iii) (taking into account any excess loss account of P in S's stock). The remaining $70 of discharge income excluded under section 108(a) has no effect on P's basis in S's stock.

(d) *Purchase price adjustment.* Assume instead that S buys land in Year 1 in exchange for S's $100 purchase money note (bearing interest at a market rate of interest in excess of the applicable Federal rate, and providing for a principal payment at the end of Year 10), and the seller agrees with S in Year 4 to discharge $60 of the note as a purchase price adjustment to which section 108(e)(5) applies. S has no discharge of indebtedness income that is treated as tax-exempt income under paragraph (b)(3)(ii) of this section. In addition, the $60 purchase price adjustment is not a noncapital, nondeductible expense under paragraph (b)(3)(iii) of this section. A purchase price adjustment is not equivalent to a discharge of indebtedness that is offset by a deduction or loss. Consequently, the purchase price adjustment results in no net adjustment to P's basis in S's stock under paragraph (b) of this section.

Example 5. Distributions. (a) *Amounts declared and distributed.* For Year 1, the P group has $120 of consolidated taxable income when determined by including only S's items of income, gain, deduction, and loss taken into account. S declares and makes a $10 dividend distribution to P at the close of Year 1. Under paragraph (b) of this section, P increases its basis in S's stock as of the close of Year 1 by a $110 net amount ($120 of taxable income, less a $10 distribution).

(b) *Distributions in later years.* The facts are the same as in paragraph (a) of this *Example 5*, except that S does not declare and distribute the $10 until Year 2. Under paragraph (b) of this section, P increases its basis in S's stock by $120 as of the close of Year 1, and decreases its basis by $10 as of the close of Year 2. (If P were also a subsidiary, the basis of its stock would also be increased in Year 1 to reflect P's $120 adjustment to basis of S's stock; the basis of P's stock would not be changed as a result of S's distribution in Year 2, because P's $10 of tax-exempt dividend income under paragraph (b)(3)(ii) of this section would be offset by the $10 negative adjustment to P's basis in S's stock for the distribution.)

(c) *Amounts declared but not distributed.* The facts are the same as in paragraph (a) of this *Example 5*, except that, during December of Year 1, S declares (and P becomes entitled to) another $70 dividend distribution with respect to its stock, but P does not receive the distribution until after it sells all of S's stock at the close of Year 1. Under § 1.1502–14(a), S is treated as making a $70 distribution to P at the time P becomes entitled to the distribution. (If S is distributing an appreciated asset, its gain under section 311 is also taken into account under paragraph (b)(3)(i) of this section at the time P becomes entitled to the distribution.) Consequently, under paragraph (b) of this section, P increases its basis in S's stock as of the close of Year 1 by only a $40 net amount ($120 of taxable income, less two distributions totalling $80). Any further adjustments after S ceases to be a member and the $70 distribution is made would be duplicative, because the stock basis has already been adjusted for the distribution. Accordingly, the distribution will not result in further adjustments or gain, even if the distribution is a payment to which section 301(c)(2) or (3) applies.

Example 6. Reorganization with boot. (a) *Facts.* P owns all of the stock of S and T. On January 1 of Year 1, P has a $100 basis in the S stock and a $60 basis in the T stock. S and T have no items of income, gain, deduction, or loss for Year 1. S and T each have substantial earnings and profits. At the close of Year 1, T merges into S in a reorganization described in section 368(a)(1)(A) (and in section 368(a)(1)(D)). P receives no additional S stock, but does receive $10 which is treated as a dividend under section 356(a)(2).

(b) *Analysis.* Under section 358, P's basis in the S stock is increased by its basis in the T stock, decreased to reflect the money received, and increased to reflect treatment of the money as a dividend. Under paragraph (b)(3)(v) of this section, the $10 is also treated as a distribution to which paragraph (b)(2)(iv) of this section applies. Thus, under section 358 and paragraph (b) of this section, P's basis in the S stock is $150 immediately after the merger. (If there had been insufficient earnings and profits to treat the $10 as a dividend under section 356(a)(2), P's basis in the S stock would be $160 because the $10 would not be a distribution to which section 301 applies; but see § 1.1502–13 for the deferral and taking into account of P's $10 gain under section 356(a)(1).)

Example 7. Tiering up of basis adjustments. P owns all of S's stock, and S owns all of T's stock. For Year 1, the P group has $100 of consolidated taxable income when determined by including only T's items of income, gain, deduction, and loss taken into account, and $50 of consolidated taxable income when determined by including only S's items taken into account. S increases its basis in T's stock by $100 under paragraph (b) of this section. Under paragraph (a)(3) of this section, this $100 basis adjustment is taken into account in determining P's adjustments to its basis in S's stock. Thus, P increases its basis in S's stock by $150 under paragraph (b) of this section.

Example 8. Allocation of items. (a) *Acquisition in mid-year.* P is the common parent of a consolidated group, and S is an unaffiliated corporation filing separate returns on a calendar-year basis. P acquires all of S's stock and S becomes a member of the P group on July 1 of Year 1. For the entire calendar Year 1, S has $100 of ordinary income and under § 1.1502–76(b) $60 is allocated to the period from January 1 to June 30 and $40 to the period from July 1 to December 31. Under paragraph (b) of this section, P increases its basis in S's stock by $40.

(b) *Sale in mid-year.* The facts are the same as in paragraph (a) of this *Example 8*, except that S is a member of the P group at the beginning of Year 1 but ceases to be a member on June 30 as a result of P's sale of S's stock. Under paragraph (b) of this section, P increases its basis in S's stock by $60 immediately before the stock sale. (P's basis increase would be the same if S became a nonmember because S issued additional shares to nonmembers.)

(c) *Absorption of loss carryovers.* Assume instead that S is a member of the P group at the beginning of Year 1 but ceases to be a member on June 30 as a result of P's sale of S's stock, and a $100 consolidated net operating loss attributable to S is carried over by the P group to Year 1. The consolidated net operating loss may be apportioned to S for its first separate return year only to the extent not absorbed by the P group during Year 1. Under paragraph (b)(3)(i) of this

section, if the loss is absorbed by the P group in Year 1, whether the offsetting income arises before or after P's sale of S's stock, the absorption of the loss carryover is included in the determination of S's taxable income or loss for Year 1. Thus, P's basis in S's stock is adjusted under paragraph (b) of this section to reflect any absorption of the loss by the P group.

Example 9. Gross-ups. (a) *Facts.* P owns all of the stock of S, and S owns all of the stock of T, a newly formed controlled foreign corporation that is not a passive foreign investment company. In Year 1, T has $100 of subpart F income and pays $34 of foreign income tax, leaving T with $66 of earnings and profits. The P group has $100 of consolidated taxable income when determined by taking into account only S's items (the inclusion under section 951(a), taking into account the section 78 gross-up). As a result of the section 951(a) inclusion, S increases its basis in T's stock by $66 under section 961(a).

(b) *Analysis.* Under paragraph (b)(3)(i) of this section, S has $100 of taxable income. Under paragraph (b)(3)(iii)(B) of this section, the $34 gross-up for taxes paid by T that S is treated as having paid is a noncapital, nondeductible expense (whether or not any corresponding amount is claimed by the P group as a tax credit). Thus, P increases its basis in S's stock under paragraph (b) of this section by the net adjustment of $66.

(c) *Subsequent distribution.* The facts are the same as in paragraph (a) of this *Example 9*, except that T distributes its $66 of earnings and profits in Year 2. The $66 distribution received by S is excluded from S's income under section 959(a) because the distribution represents earnings and profits attributable to amounts that were included in S's income under section 951(a) for Year 1. In addition, S's basis in T's stock is decreased by $66 under section 961(b). The excluded distribution is not tax-exempt income under paragraph (b)(3)(ii) of this section because of the corresponding reduction to S's basis in T's stock. Consequently, P's basis in S's stock is not adjusted under paragraph (b) of this section for Year 2.

Example 10. Recapture of tax-exempt items. (a) *Facts.* S is a life insurance company. For Year 1, the P group has $200 of consolidated taxable income, determined by including only S's items of income, gain, deduction, and loss taken into account (including a $300 small company deduction under section 806). In addition, S has $100 of tax-exempt interest income, $60 of which is S's *company share.* The remaining $40 of tax-exempt income is the *policyholders' share* that reduces S's deduction for increase in reserves.

(b) *Tax-exempt items generally.* Under paragraph (b)(3)(i) of this section, S has $200 of taxable income for Year 1. Also for Year 1, S has $100 of tax-exempt income under paragraph (b)(3)(ii)(A) of this section, and another $300 is treated as tax-exempt income under paragraph (b)(3)(ii)(B) of this section because of the deduction under section 806. Under paragraph (b)(3)(iii) of this section, S has $40 of noncapital, nondeductible expenses for Year 1 because S's deduction under section 807 for its increase in reserves has been permanently reduced by the $40 policyholders' share of the tax-exempt interest income. Thus, P increases its basis in S's stock by $560 under paragraph (b) of this section.

(c) *Recapture.* Assume instead that S is a property and casualty company and, for Year 1, S accrues $100 of estimated salvage recoverable under section 832. Of this amount, $87 (87% of $100) is excluded from gross income because of the "fresh start" provisions of Sec. 11305(c) of P.L. 101–508 (the Omnibus Budget Reconciliation Act of 1990). Thus, S has $87 of tax-exempt income under paragraph (b)(3)(ii)(A) of this section that increases P's basis in S's stock for Year 1. (S also has $13 of taxable income over the period of inclusion under section 481.) In Year 5, S determines that the $100 salvage recoverable was overestimated by $30 and deducts $30 for the reduction of the salvage recoverable. However, S has $26.10 (87% of $30) of taxable income in Year 5 due to the partial recapture of its fresh start. Because S has no basis corresponding to this income, S is treated under paragraph (b)(3)(iii)(B) of this section as having a $26.10 noncapital, nondeductible expense in Year 5. This treatment is necessary to reflect the elimination of the erroneous fresh start in S's stock basis and causes a decrease in P's basis in S's stock by $30 for Year 5 (a $3.90 taxable loss and a $26.10 special adjustment).

(c) *Allocation of adjustments among shares of stock*—(1) *In general.* The portion of the adjustment under paragraph (b) of this section that is described in paragraph (b)(2)(iv) of this section (negative adjustments for distributions) is allocated to the shares of S's stock to which the distribution relates. The remainder of the adjustment, described in paragraphs (b)(2)(i) through (iii) of this section (adjustments for taxable income or loss, tax-exempt income, and noncapital, nondeductible expenses), is allocated among the shares of S's stock as provided in paragraphs (c)(2) through (4) of this section. If the remainder of the adjustment is positive, it is allocated first to any preferred stock to the extent provided in paragraph (c)(3) of this section, and then to the common stock as provided in paragraph (c)(2) of this section. If the remainder of the adjustment is negative, it is allocated only to common stock as provided in paragraph (c)(2) of this section. An adjustment under this section allocated to a share for the period the share is owned by a nonmember has no effect on the basis of the share. See paragraph (c)(4) of this section for the reallocation of adjustments, and paragraph (d) of this section for definitions. See § 1.1502-19(d) for special allocations of basis determined or adjusted under the Code with respect to excess loss accounts.

(2) *Common stock*—(i) *Allocation within a class.* The portion of the adjustment described in paragraphs (b)(2)(i) through (iii) of this section (the adjustment determined without taking distributions into account) that is allocable to a class of common stock is generally allocated equally to each share within the class. However, if a member has an excess loss account in shares of a class of common stock at the time of a positive adjustment, the portion of the adjustment allocable to the member with respect to the class is allocated first to equalize and eliminate that member's excess loss accounts and then to increase equally its basis in the shares of that class. Similarly, any negative adjustment is allocated first to reduce the member's positive basis in shares of the class before creating or increasing its excess loss account. Distributions and any adjustments or determinations under the Internal Revenue Code (e.g., under section 358, including any modifications under § 1.1502–19(d)) are taken into account before the allocation is made under this paragraph (c)(2)(i).

(ii) *Allocation among classes*—(A) *General rule.* If S has more than one class of common stock, the extent to which the adjustment described in paragraphs (b)(2)(i) through (iii) of this section (the adjustment determined without taking distributions into account) is allocated to each class is determined, based on consistently applied assumptions, by taking into account the terms of each class and all other facts and circumstances relating to the overall economic arrangement. The allocation generally must reflect the manner in which the classes participate in the economic benefit or burden (if any) corresponding to the items of income, gain, deduction, or loss allocated. In determining participation, any differences in voting rights are not taken into account, and the following factors are among those to be considered—

(*1*) The interest of each share in economic profits and losses (if different from the interest in taxable income);

(*2*) The interest of each share in cash flow and other non-liquidating distributions; and

(*3*) The interest of each share in distributions in liquidation.

(B) *Distributions and Code adjustments.* Distributions and any adjustments or determinations under the Internal Revenue Code are taken into account before the allocation is made under this paragraph (c)(2)(ii).

(3) *Preferred stock.* If the adjustment under paragraphs (b)(2)(i) through (iii) of this section (the adjustment determined without taking distributions into account) is positive, it is allocated to preferred stock to the extent required (when aggregated with prior allocations

to the preferred stock during the period that S is a member of the consolidated group) to reflect distributions described in section 301 (and all other distributions treated as dividends) to which the preferred stock becomes entitled, and arrearages arising, during the period that S is a member of the consolidated group. For this purpose, the preferred stock is treated as entitled to a distribution no later than the time the distribution is taken into account under the Internal Revenue Code (e.g., under section 305). If the amount of distributions and arrearages exceeds the positive amount (when aggregated with prior allocations), the positive amount is first allocated among classes of preferred stock to reflect their relative priorities, and the amount allocated to each class is then allocated pro rata within the class. An allocation to a share with respect to arrearages and distributions for the period the share is owned by a nonmember is not reflected in the basis of the share under paragraph (b) of this section. However, if P and S cease to be members of one consolidated group and remain affiliated as members of another consolidated group, P's ownership of S's stock during consolidated return years of the prior group is treated for this purpose as ownership by a member to the extent that the adjustments during the prior consolidated return years are still reflected in the basis of the preferred stock.

(4) *Cumulative redetermination*—(i) *General rule.* A member's basis in each share of S's preferred and common stock must be redetermined whenever necessary to determine the tax liability of any person. See paragraph (b)(1) of this section. The redetermination is made by reallocating S's net adjustment described in paragraphs (b)(2)(i) through (iii) of this section (the adjustment determined without taking distributions into account) for each consolidated return year (or other applicable period) of the group by taking into account all of the facts and circumstances affecting allocations under this paragraph (c) as of the redetermination date with respect to all of S's shares. For this purpose:

(A) Amounts may be reallocated from one class of S's stock to another class, but not from one share of a class to another share of the same class.

(B) If there is a change in the equity structure of S (e.g., as the result of S's issuance, redemption, or recapitalization of shares), a cumulative redetermination is made for the period before the change. If a reallocation is required by another redetermination after a change, amounts arising after the change are reallocated before amounts arising before the change.

(C) If S becomes a nonmember as a result of a change in its equity structure, any reallocation is made only among the shares of S's stock immediately before the change. For example, if S issues stock to a nonmember creditor in exchange for its debt, and the exchange results in S becoming a nonmember, any reallocation is only among the shares of S's stock immediately before the exchange.

(D) Any reallocation is treated for all purposes after it is made (including subsequent redeterminations) as the original allocation of an amount under this paragraph (c), but the reallocation does not affect any prior period.

(ii) *Prior use of allocations.* An amount may not be reallocated under paragraph (c)(4)(i) of this section to the extent that the amount has been used before the reallocation. For this purpose, an amount has been used to the extent it has been taken into account, directly or indirectly, by any member in determining income, gain, deduction, or loss, or in determining the basis of any property that is not subject to this section (e.g., stock of a corporation that has become a nonmember). For example, if P sells a share of S stock, an amount previously allocated to the share cannot be reallocated to another share of S stock, but an amount allocated to another share of S stock can still be reallocated to the sold share because the reallocated amount has not been taken into account; however, any adjustment reallocated to the sold share may effectively be eliminated, because the reallocation was not in effect when the share was previously sold and P's gain or loss from the sale is not redetermined. If, however, P sells the share of S stock to another member, the amount is not used until P's gain or loss is taken into account under § 1.1502–13.

(5) *Examples.* The principles of this paragraph (c) are illustrated by the following examples.

Example 1. Ownership of less than all the stock. (a) *Facts.* P owns 80% of S's only class of stock with an $800 basis. For Year 1, S has $100 of taxable income.

(b) *Analysis.* Under paragraph (c)(1) of this section, the $100 positive adjustment under paragraph (b) of this section for S's taxable income is allocated among the shares of S's stock, including shares owned by nonmembers. Under paragraph (c)(2)(i) of this section, the adjustment is allocated equally to each share of S's stock. Thus, P increases its basis in S's stock under paragraph (b) of this section as of the close of Year 1 by $80. (The basis of the 20% of S's stock owned by nonmembers is not adjusted under this section.)

(c) *Varying interest.* The facts are the same as in paragraph (a) of this *Example 1*, except that P buys the remaining 20% of S's stock at the close of business on June 30 of Year 1 for $208. Under paragraph (b)(1) of this section and the principles of § 1.1502–76(b), S's $100 of taxable income is allocable $40 to the period from January 1 to June 30 and $60 to the period from July 1 to December 31 Thus, for the period ending June 30, P is treated as having a $32 adjustment with respect to the S stock that P has owned since January 1 (80% of $40) and, under paragraph (c)(2)(i) of this section, the adjustment is allocated equally among those shares. For the period ending December 31, P is treated as having a $60 adjustment (100% of $60) that is also allocated equally among P's shares of S's stock owned after June 30. P's basis in the shares owned as of the beginning of the year therefore increases by $80 (the sum of 80% of $40 and 80% of $60), from $800 to $880, and P's basis in the shares purchased on June 30 increases by $12 (20% of $60), from $208 to $220. Thus, P's aggregate basis in S's stock as of the end of Year 1 is $1,100.

(d) *Tax liability.* The facts are the same as in paragraph (a) of this *Example 1*, except that P pays S's $34 share of the group's consolidated tax liability resulting from S's taxable income, and S does not reimburse P. S's $100 of taxable income results in a positive adjustment under paragraph (b)(3)(i) of this section, and S's $34 of tax liability results in a negative adjustment under paragraph (b)(3)(iv)(D) of this section and the principles of section 1552. Because S does not make any payment in recognition of the additional tax liability, by analogy to the treatment under § 1.1552–1(b)(2), S is treated as having made a $34 payment that is described in paragraph (b)(3)(iii) of this section (noncapital, nondeductible expenses) and as having received an equal amount from P as a capital contribution. Thus, P increases its basis in its S stock by $52.80 (80% of the $100 of taxable income, less 80% of the $34 tax payment). In addition, P increases its basis in S's stock by $34 under the Internal Revenue Code and paragraph (a)(2) of this section to reflect the capital contribution. In the aggregate, P increases its basis in S's stock by $86.80. (If, as in paragraph (c) of this *Example 1*, P buys the remaining 20% of S's stock at the close of business on June 30, P increases its basis in S's stock by another $7.90 for the additional 20% interest in S's income after June 30 ($60 multiplied by 20%, less 20% of the $20.40 tax payment on $60); the $34 capital contribution by P is reflected in all of its S shares (not just the original 80%), and P's aggregate basis adjustment under this section is $94.70 ($86.80 plus $7.90).)

Example 2. Preferred stock. (a) *Facts.* P owns all of S's common stock with an $800 basis, and nonmembers own all of S's preferred stock. The preferred stock was issued for $200, has a $20 annual, cumulative preference as to dividends, and has an initial liquidation preference of $200. For Year 1, S has $50 of taxable income and no distributions are declared or made.

(b) *Analysis of arrearages.* Under paragraphs (c) (1) and (3) of this section, $20 of the $50 positive adjustment under

paragraph (b) of this section is allocated first to the preferred stock to reflect the dividend arrearage arising in Year 1. The remaining $30 of the positive adjustment is allocated to the common stock, increasing P's basis from $800 to $830 as of the close of Year 1. (The basis of the preferred stock owned by nonmembers is not adjusted under this section.)

(c) *Current distribution.* The facts are the same as in paragraph (a) of this *Example 2,* except that S declares and makes a $20 distribution with respect to the preferred stock during Year 1 in satisfaction of its preference. The results are the same as in paragraph (b) of this *Example 2.*

(d) *Varying interest.* The facts are the same as in paragraph (a) of this *Example 2,* except that S has no income or loss for Years 1 and 2, P purchases all of S's preferred stock at the beginning of Year 3 for $240, and S has $70 of taxable income for Year 3. Under paragraph (c)(3) of this section, $60 of the $70 positive adjustment under paragraph (b) of this section is allocated to the preferred stock to reflect the dividends arrearages for Years 1 through 3, but only the $20 for Year 3 is reflected in the basis of the preferred stock under paragraph (b) of this section. (The remaining $40 is not reflected because the preferred stock was owned by nonmembers during Years 1 and 2.) Thus, P increases its basis in S's preferred stock from $240 to $260, and its basis in S's common stock from $800 to $810, as of the close of Year 3. (If P had acquired all of S's preferred stock in a transaction to which section 351 applies, and P's initial basis in S's preferred stock was $200 under section 362, P's basis in S's preferred stock would increase from $200 to $220.)

(e) *Varying interest with current distributions.* The facts are the same as in paragraph (d) of this *Example 2,* except that S declares and makes a $20 distribution with respect to the preferred stock in each of Years 1 and 2 in satisfaction of its preference, and P purchases all of S's preferred stock at the beginning of Year 3 for $200. Under paragraph (c)(3) of this section, $40 of the $70 positive adjustment under paragraph (b) of this section is allocated to the preferred stock to reflect the distributions in Years 1 and 2, and $20 of the $70 is allocated to the preferred stock to reflect the arrearage for Year 3. However, as in paragraph (d) of this *Example 2,* only the $20 attributable to Year 3 is reflected in the basis of the preferred stock under paragraph (b) of this section. Thus, P increases its basis in S's preferred stock from $200 to $220, and P increases its basis in S's common stock from $800 to $810.

Example 3. Cumulative redetermination. (a) *Facts.* P owns all of S's common and preferred stock. The preferred stock has a $100 annual, cumulative preference as to dividends. For Year 1, S has $200 of taxable income, the first $100 of which is allocated to the preferred stock and the remaining $100 of which is allocated to the common stock. For Year 2, S has no adjustment under paragraph (b) of this section, and P sells all of S's common stock at the close of Year 2.

(b) *Analysis.* Under paragraph (c)(4) of this section, P's basis in S's common stock must be redetermined as of the sale of the stock. The redetermination is made by reallocating the $200 positive adjustment under paragraph (b) of this section for Year 1 by taking into account all of the facts and circumstances affecting allocations as of the sale. Thus, the $200 positive adjustment for Year 1 is reallocated entirely to the preferred stock to reflect the dividend arrearages for Years 1 and 2. The reallocation away from the common stock reflects the fact that, because of the additional amount of arrearage in Year 2, the common stock is not entitled to any part of the $200 of taxable income from Year 1. Thus, the common stock has no positive or negative adjustment, and the preferred stock has a $200 positive adjustment. These reallocations are treated as the original allocations for Years 1 and 2. (The results for the common stock would be the same if the common and preferred stock were not owned by the same member, or the preferred stock were owned by nonmembers.)

(c) *Preferred stock issued after adjustment arises.* The facts are the same as in paragraph (a) of this *Example 3,* except that S does not issue its preferred stock until the beginning of Year 2, S has no further adjustment under paragraph (b) of this section for Years 2 and 3, and P sells S's common stock at the close of Year 3. Under paragraphs (c) (1) and (2) of this section, the $200 positive adjustment for Year 1 is initially allocated entirely to the common stock. Under paragraph (c)(4) of this section, the $200 adjustment is reallocated to the preferred stock to reflect the arrearages for Years 2 and 3. Thus, the common stock has no positive or negative adjustment.

(d) *Common stock issued after adjustment arises.* The facts are the same as in paragraph (a) of this *Example 3,* except that S has no preferred stock, S issues additional common stock of the same class at the beginning of Year 2, S has no further adjustment under paragraph (b) of this section in Years 2 and 3, and P sells its S common stock at the close of Year 3. Under paragraphs (c) (1) and (2) of this section, the $200 positive adjustment for Year 1 is initially allocated entirely to the original common stock. Under paragraph (c)(4)(i)(A) of this section, the $200 adjustment is not reallocated among the original common stock and the additional stock. Unlike the preferred stock in paragraph (c) of this *Example 3,* the additional common stock is of the same class as the original stock, and there is no reallocation between shares of the same class.

(e) *Positive and negative adjustments.* The facts are the same as in paragraph (a) of this *Example 3,* except that S has a $200 loss for Year 2 that results in a negative adjustment to the common stock before any redetermination. For purposes of the basis redetermination under paragraph (c)(4) of this section, the Year 1 and 2 adjustments under paragraph (b) of this section are not netted. Thus, as in paragraph (b) of this *Example 3,* the redetermination is made by reallocating the $200 positive adjustment for Year 1 entirely to the preferred stock. The $200 negative adjustment for Year 2 is allocated entirely to the common stock. Consequently, the preferred stock has a $200 positive cumulative adjustment, and the common stock has a $200 negative cumulative adjustment. (The results would be the same if there were no other adjustments described in paragraph (b) of this section, P sells S's common stock at the close of Year 3 rather than Year 2, and an additional $100 arrearage arises in Year 3; only adjustments under paragraph (b) of this section may be reallocated, and there is no additional adjustment for Year 3.)

(f) *Current distributions.* The facts are the same as in paragraph (a) of this *Example 3,* except that, during Year 1, S declares and makes a distribution to P of $100 as a dividend on the preferred stock and $100 as a dividend on the common stock. The taxable income and distributions result in no Year 1 adjustment under paragraph (b) of this section for either the common or preferred stock. However, as in paragraph (b) of this *Example 3,* the redetermination under paragraph (c)(4) of this section is made by reallocating a $200 positive adjustment for Year 1 (S's net adjustment described in paragraph (b) of this section, determined without taking distributions into account) to the preferred stock. Consequently, the preferred stock has a $100 positive cumulative adjustment ($200 of taxable income, less a $100 distribution with respect to the preferred stock) and the common stock has a $100 negative cumulative adjustment (for the distribution).

(g) *Convertible preferred stock.* The facts are the same as in paragraph (a) of this *Example 3,* except that the preferred stock is convertible into common stock that is identical to the common stock already outstanding, the holders of the preferred stock convert the stock at the close of Year 2, and no stock is sold until the close of Year 5. Under paragraph (c)(4) of this section, the $200 positive adjustment for Year 1 is reallocated entirely to the preferred stock immediately before the conversion. The newly issued common stock is treated as a second class of S common stock, and adjustments under paragraph (b) of this section are allocated between the original and the new common stock under paragraph (c)(2)(ii) of this section. Although the preferred stock is converted to common stock, the $200 adjustment to the preferred stock is not subsequently reallocated between the original and the new common stock. Because the original and the new stock are equivalent, adjustments under paragraph (b) of this section for subsequent periods are allocated equally to each share.

(h) *Prior use of allocations.* The facts are the same as in paragraph (a) of this *Example 3,* except that P sells 10% of S's common stock at the close of Year 1, and the remaining 90% at the close of Year 2. P's basis in the common stock sold in Year 1 reflects $10 of the adjustment allocated to the common stock for Year 1. Under paragraph (c)(4)(ii) of this section, because $10 of the Year 1 adjustment was used in determining P's gain or loss, only $90 is reallocated to the preferred stock, and $10 remains allocated to the common stock sold.

(i) *Lower-tier members.* The facts are the same as in paragraph (a) of this *Example 3,* except that P owns only S's common stock, and P is also a subsidiary. If there is a redetermination under paragraph (c)(4) of this section by a member owning P's stock,

a redetermination with respect to S's stock must be made first, and the effect of that redetermination on P's adjustments is taken into account under paragraph (b) of this section. However, as in paragraph (h) of this *Example 3*, to the extent an amount of the initial adjustments with respect to S's common stock have already been tiered up and used by a member owning P's stock, that amount remains with S's common stock (and the higher-tier member using the adjustment with respect to P's stock), and may not be reallocated to S's preferred stock.

Example 4. Allocation to preferred stock between groups. (a) *Facts.* P owns all of S's only class of stock, and S owns all of T's common and preferred stock. The preferred stock has a $100 annual, cumulative preference as to dividends. For Year 1, T has $200 of taxable income, the first $100 of which is allocated to the preferred stock and the remaining $100 of which is allocated to the common stock, and S has no adjustments other than the amounts tiered up from T. S and T have no adjustments under paragraph (b) of this section for Years 2 and 3. X, the common parent of another consolidated group, purchases all of S's stock at the close of Year 3, and S and T become members of the X group. For Year 4, T has $200 of taxable income, and S has no adjustments other than the amounts tiered up from T.

(b) *Analysis for Years 1 through 3.* Under paragraph (c)(4) of this section, the allocation of S's adjustments under paragraph (b) of this section (determined without taking distributions into account) must be redetermined as of the time P sells S's stock. As a result of this redetermination, T's common stock has no positive or negative adjustment and the preferred stock has a $200 positive adjustment.

(c) *Analysis for Year 4.* Under paragraph (c)(3) of this section, the allocation of T's $200 positive adjustment in Year 4 to T's preferred stock with respect to arrearages is made by taking into account the consolidated return years of both the P group and the X group. Thus, the allocation of the $200 positive adjustment for Year 4 to T's preferred stock is not treated as an allocation for a period for which the preferred stock is owned by a nonmember. Thus, the $200 adjustment is reflected in S's basis in T's preferred stock under paragraph (b) of this section.

(d) *Definitions.* For purposes of this section—

(1) *Class.* The shares of a member having the same material terms (without taking into account voting rights) are treated as a single class of stock.

(2) *Preferred stock.* Preferred stock is stock that is limited and preferred as to dividends and has a liquidation preference. A class of stock that is not described in section 1504(a)(4), however, is not treated as preferred stock for purposes of paragraph (c) of this section if members own less than 80% of each class of common stock (determined without taking this paragraph (d)(2) into account).

(3) *Common stock.* Common stock is stock that is not preferred stock.

(4) *Becoming a nonmember.* A member is treated as becoming a nonmember if it has a separate return year (including another group's consolidated return year). For example, S may become a nonmember if it issues additional stock to nonmembers, but S does not become a nonmember as a result of its complete liquidation.

(e) *Anti-avoidance rule*—(1) *General rule.* If any person acts with a principal purpose contrary to the purposes of this section, to avoid the effect of the rules of this section or apply the rules of this section to avoid the effect of any other provision of the consolidated return regulations, adjustments must be made as necessary to carry out the purposes of this section.

(2) *Examples.* The principles of this paragraph (e) are illustrated by the following examples.

Example 1. Preferred stock treated as common stock. (a) *Facts.* S has 100 shares of common stock and 100 shares of preferred stock described in section 1504(a)(4). P owns 80 shares of S's common stock and all of S's preferred stock. The shareholders expect that S will have negative adjustments under paragraph (b) of this section for Years 1 and 2 (all of which will be allocable to S's common stock), the negative adjustments will have no significant effect on the value of S's stock, and S will have offsetting positive adjustments thereafter. When the preferred stock was issued, P intended to cause S to recapitalize the preferred stock into additional common stock at the end of Year 2 in a transaction described in section 368(a)(1)(E). P's temporary ownership of the preferred stock is with a principal purpose to limit P's basis reductions under paragraph (b) of this section to 80% of the anticipated negative adjustments. The recapitalization is intended to cause significantly more than 80% of the anticipated positive adjustments to increase P's basis in S's stock because of P's increased ownership of S's common stock immediately after the recapitalization.

(b) *Analysis.* S has established a transitory capital structure with a principal purpose to enhance P's basis in S's stock under this section. Under paragraph (e)(1) of this section, all of S's common and preferred stock is treated as a single class of common stock in Years 1 and 2 for purposes of this section. Thus, S's items are allocated under the principles of paragraph (c)(2)(ii) of this section, and P decreases its basis in both the common and preferred stock accordingly.

Example 2. Contribution of appreciated property. (a) *Facts.* P owns all of the stock of S and T, and S and T each own 50% of the stock of U. P's S stock has a $150 basis and $200 value, and P's T stock has a $200 basis and $200 value. With a principal purpose to eliminate P's gain from an anticipated sale of S's stock, T contributes to U an asset with a $100 value and $0 basis, and S contributes $100 cash. U sells T's asset and recognizes a $100 gain that results in a $100 positive adjustment under paragraph (b) of this section.

(b) *Analysis.* Under paragraph (c)(2) of this section, U's adjustment ordinarily would be allocated equally to each share of U's stock. If so allocated, P's basis in S's stock would increase from $150 to $200 and P would recognize no gain from the sale of S's stock for $200. Under paragraph (e)(1) of this section, however, because T transferred an appreciated asset to U with a principal purpose to shift a portion of the stock basis increase from P's stock in T to P's stock in S, the allocation of the $100 positive adjustment under paragraph (c) of this section between the shares of U's stock must take into account the contribution. Consequently, all $100 of the positive adjustment is allocated to the U stock owned by T, rather than $50 to the U stock owned by S and $50 to the U stock owned by T. P's basis in S's stock remains $150, and its basis in T's stock increases to $300. Thus, P recognizes a $50 gain from its sale of S's stock for $200.

Example 3. Reorganizations. (a) *Facts.* P forms S with an $800 contribution, $200 of which is in exchange for S's preferred stock described in section 1504(a)(4) and the balance of which is for S's common stock. For Years 1 through 3, S has a total of $160 of ordinary income, $60 of which is distributed with respect to the preferred stock in satisfaction of its $20 annual preference as to dividends. Under this section, P's basis in S's preferred stock is unchanged, and its basis in S's common stock is increased from $600 to $700. To reduce its gain from an anticipated sale of S's preferred stock, P forms T at the close of Year 3 with a contribution of all of S's stock in exchange for corresponding common and preferred stock of T in a transaction to which section 351 applies. At the time of the contribution, the fair market value of the common stock is $700 and the fair market value of the preferred stock is $300 (due to a decrease in prevailing market interest rates). P subsequently sells T's preferred stock for $300.

(b) *Analysis.* Under section 358(b), P ordinarily has a $630 basis in T's common stock (70% of the $900 aggregate stock basis) and a $270 basis in T's preferred stock (30% of the $900 aggregate stock basis). However, because P transferred S's stock to T with a principal purpose to shift the allocation of basis adjustments under this section, adjustments are made under paragraph (e)(1) of this section to preserve the allocation under this section. Thus, P has a $700 basis in T's common stock and a $200 basis in T's preferred stock. Consequently, P recognizes a $100 gain from the sale of T's preferred stock.

Example 4. Post-deconsolidation basis adjustments. (a) *Facts.* For Year 1, the P group has $40 of taxable income when determined by including only S's items of income, gain, deduction, and loss taken into account, and P increases its basis in S's stock by $40 under paragraph (b) of this section. P anticipates that S will have a $40 ordinary loss for Year 2 that will be carried back and offset S's income in Year 1 and result in a $40 reduction to P's basis in S's stock for Year 2 under paragraph (b) of this section.

With a principal purpose to avoid the reduction, P causes S to issue voting preferred stock that results in S becoming a nonmember at the beginning of Year 2. (Section 1.1502–20(b) does not reduce P's basis in the S stock as a result of S's deconsolidation.) As anticipated, S has a $40 loss for Year 2, which is carried back to Year 1 and offsets S's income from Year 1.

(b) *Analysis.* Under paragraph (e)(1) of this section, because P caused S to become a nonmember with a principal purpose to absorb S's loss but avoid the corresponding negative adjustment under this section, and P bears a substantial portion of the loss because of its continued ownership of S common stock, the basis of P's common stock in S is decreased by $40 for Year 2. (If P has less than a $40 basis in the retained S stock, P must recognize income for Year 2 to the extent of the excess.) Section 1504(a)(3) limits the ability of S to subsequently rejoin the P group's consolidated return.

(c) *Carryback to pre-consolidation year.* The facts are the same as in paragraph (a) of this *Example 4*, except that P anticipates that S's loss will be carried back and absorbed in a separate return year of S before Year 1 (rather than to the P group's consolidated return for Year 1). Although P causes S to become a nonmember with a principal purpose to avoid the negative adjustment under this section, and P bears a substantial portion of the loss because of its continued ownership of S common stock, both S's income and loss are taken into account under the separate return rules. Consequently, no one has acted with a principal purpose contrary to the purposes of this section, and no adjustments are necessary to carry out the purposes of this section.

Example 5. Pre-consolidation basis adjustments. (a) *Facts.* P forms S with a $100 contribution, and S becomes a member of the P affiliated group which does not file consolidated returns. For Years 1 through 3, S earns $300. P anticipates that it will elect under section 1501 for the P group to begin filing consolidated returns in Year 5. In anticipation of filing consolidated returns, and to avoid the negative stock basis adjustment that would result under paragraph (b) of this section from distributing S's earnings after Year 5, P causes S to distribute $300 during Year 4 as a qualifying dividend within the meaning of section 243(b). There is no plan or intention to recontribute the funds to S after the distribution.

(b) *Analysis.* Although S's distribution of $300 is with a principal purpose to avoid a corresponding negative adjustment under this section, the $300 was both earned and distributed entirely under the separate return rules. Consequently, P and S have not acted with a principal purpose contrary to the purposes of this section, and no adjustments are necessary to carry out the purposes of this section.

(f) *Predecessors and successors.* For purposes of this section, any reference to a corporation or to a share of stock includes a reference to a successor or predecessor as the context may require. A corporation is a successor if the basis of its assets is determined, directly or indirectly, in whole or in part, by reference to the basis of another corporation (the predecessor). A share is a successor if its basis is determined, directly or indirectly, in whole or in part, by reference to the basis of another share (the predecessor).

(g) *Recordkeeping.* Adjustments under this section must be reflected annually on permanent records (including work papers). See also section 6001, requiring records to be maintained. The group must be able to identify from these permanent records the amount and allocation of adjustments, including the nature of any tax-exempt income and noncapital, nondeductible expenses, so as to permit the application of the rules of this section for each year.

(h) *Effective date*—(1) *General rule.* This section applies with respect to determinations of the basis of the stock of a subsidiary (e.g., for determining gain or loss from a disposition of stock) in consolidated return years beginning on or after January 1, 1995. If this section applies, basis must be determined or redetermined as if this section were in effect for all years (including, for example, the consolidated return years of another consolidated group to the extent adjustments from those years are still reflected). For example, if the portion of a consolidated net operating loss carryover attributable to S expired in 1990 and is treated as a noncapital, nondeductible expense under paragraph (b) of this section, it is taken into account in tax years beginning on or after January 1, 1995 as a negative adjustment for 1990. Any such determination or redetermination does not, however, affect any prior period. Thus, the negative adjustment for S's noncapital, nondeductible expense is not taken into account for tax years beginning before January 1, 1995.

(2) *Dispositions of stock before effective date*—(i) *In general.* If P disposes of stock of S in a consolidated return year beginning before January 1, 1995, the amount of P's income, gain, deduction, or loss, and the basis reflected in that amount, are not redetermined under this section. See § 1.1502–19 as contained in the 26 CFR part 1 edition revised as of April 1, 1994 for the definition of disposition, and paragraph (h)(5) of this section for the rules applicable to such dispositions.

(ii) *Lower-tier members.* Although P disposes of S's stock in a tax year beginning before January 1, 1995, S's determinations or adjustments with respect to the stock of a lower-tier member with which it continues to file a consolidated return are redetermined in accordance with the rules of this section (even if they were previously taken into account by P and reflected in income, gain, deduction, or loss from the disposition of S's stock). For example, assume that P owns all of S's stock, S owns all of T's stock, and T owns all of U's stock. If S sells 80% of T's stock in a tax year beginning before January 1, 1995 (the effective date), the amount of S's income, gain, deduction, or loss from the sale, and the stock basis adjustments reflected in that amount, are not redetermined if P sells S's stock after the effective date. If S sells the remaining 20% of T's stock after the effective date, S's stock basis adjustments with respect to that T stock are also not redetermined because T became a nonmember before the effective date. However, if T and U continue to file a consolidated return with each other and T sells U's stock after the effective date, T's stock basis adjustments with respect to U's stock are redetermined (even though some of those adjustments may have been taken into account by S in its prior sale of T's stock before the effective date).

(iii) *Deferred amounts.* For purposes of this paragraph (h)(2), a disposition does not include a transaction to which § 1.1502–13, § 1.1502–13T, § 1.1502–14, or § 1.1502–14T applies. Instead, the transaction is deemed to occur as the income, gain, deduction, or loss (if any) is taken into account.

(3) *Distributions*—(i) *Deemed dividend elections.* If there is a deemed distribution and recontribution pursuant to § 1.1502–32(f)(2) as contained in the 26 CFR part 1 edition revised as of April 1, 1994 in a consolidated return year beginning before January 1, 1995, the deemed distribution and recontribution under the election are treated as an actual distribution by S and recontribution by P as provided under the election.

(ii) *Affiliated earnings and profits.* This section does not apply to reduce the basis in S's stock as a result of a distribution of earnings and profits accumulated in separate return years, if the distribution is made in a consolidated return year beginning before January 1, 1995, and the distribution does not cause a negative adjustment under the investment adjustment rules in effect at the time of the distribution. See paragraph (h)(5) of this section for the rules in effect with respect to the distribution.

(4) *Expiring loss carryovers.* If S became a member of a consolidated group in a consolidated return year beginning before January 1, 1995, and S had a loss carryover from a separate return limitation year at that time, the

group does not treat any expiration of the loss carryover (even if in a tax year beginning on or after January 1, 1995) as a noncapital, nondeductible expense resulting in a negative adjustment under this section. If S becomes a member of a consolidated group in a consolidated return year beginning on or after January 1, 1995, and S has a loss carryover from a separate return limitation year at that time, adjustments with respect to the expiration are determined under this section.

(5) *Prior law*—(i) *In general.* For prior determinations, see prior regulations under section 1502 as in effect with respect to the determination. See, e.g., §§ 1.1502–32 and 1.1502–32T as contained in the 26 CFR part 1 edition revised as of April 1, 1994.

(ii) *Continuing basis reductions for certain deconsolidated subsidiaries.* If a subsidiary ceases to be a member of a group in a consolidated return year beginning before January 1, 1995, and its basis was subject to reduction under § 1.1502–32T or § 1.1502–32(g) as contained in the 26 CFR part 1 edition revised as of April 1, 1994, its basis remains subject to reduction under those principles. For example, if S ceased to be a member in 1990, and P's basis in any retained S stock was subject to a basis reduction account, the basis remains subject to reduction. Similarly, if an election could be made to apply § 1.1502–32T instead of § 1.1502–32(g), the election remains available. However, §§ 1.1502–32T and 1.1502–32(g) do not apply as a result of a subsidiary ceasing to be a member in tax years beginning on or after January 1, 1995.

§ 1.1502–32T [Removed]

Par. 14. Section 1.1502–32T is removed.

Par. 15. Section 1.1502–33 is revised to read as follows:

§ 1.1502–33 Earnings and profits.

(a) *In general*—(1) *Purpose.* This section provides rules for adjusting the earnings and profits of a subsidiary (S) and any member (P) owning S's stock. These rules modify the determination of P's earnings and profits under applicable rules of law, including section 312, by adjusting P's earnings and profits to reflect S's earnings and profits for the period that S is a member of the consolidated group. The purpose for modifying the determination of earnings and profits is to treat P and S as a single entity by reflecting the earnings and profits of lower-tier members in the earnings and profits of higher-tier members and consolidating the group's earnings and profits in the common parent. References in this section to earnings and profits include deficits in earnings and profits.

(2) *Application of other rules of law.* The rules of this section are in addition to other rules of law. For example, the allowance for depreciation is determined in accordance with section 312(k). P's earnings and profits must not be adjusted under this section and other rules of law in a manner that has the effect of duplicating an adjustment. For example, if S's earnings and profits are reflected in P's earnings and profits under paragraph (b) of this section, and S transfers its assets to P in a liquidation to which section 332 applies, S's earnings and profits that P succeeds to under section 381 must be adjusted to prevent duplication.

(b) *Tiering up earnings and profits*—(1) *General rule.* P's earnings and profits are adjusted under this section to reflect changes in S's earnings and profits in accordance with the applicable principles of § 1.1502–32, consistently applied, and an adjustment to P's earnings and profits for a tax year under this paragraph (b)(1) is treated as earnings and profits of P for the tax year in which the adjustment arises. Under these principles, for example, the adjustments are made as of the close of each consolidated return year, and as of any other time if a determination at that time is necessary to determine the earnings and profits of any person. Similarly, S's earnings and profits are allocated under the principles of § 1.1502–32(c), and the adjustments are applied in the order of the tiers, from the lowest to the highest. However, modifications to the principles include:

(i) The amount of P's adjustment is determined by reference to S's earnings and profits, rather than S's taxable and tax-exempt items (and therefore, for example, the deferral of a negative adjustment for S's unabsorbed losses does not apply).

(ii) The tax sharing rules under paragraph (d) of this section apply rather than those of § 1.1502–32(b)(3)(iv)(D).

(2) *Affiliated earnings and profits.* The reduction in S's earnings and profits under section 312 from a distribution of earnings and profits accumulated in separate return years of S that are not separate return limitation years does not tier up to P's earnings and profits. Thus, the increase in P's earnings and profits under section 312 from receipt of the distribution is not offset by a corresponding reduction.

(3) *Examples*—(i) *In general.* For purposes of the examples in this section, unless otherwise stated, P owns all of the only class of S's stock, the stock is owned for the entire year, S owns no stock of lower-tier members, the tax year of all persons is the calendar year, all persons use the accrual method of accounting, the facts set forth the only corporate activity, preferred stock is described in section 1504(a)(4), all transactions are between unrelated persons, and tax liabilities are disregarded.

(ii) *Tiering up earnings and profits.* The principles of this paragraph (b) are illustrated by the following examples.

Example 1. Tier-up and distribution of earnings and profits. (a) *Facts.* P forms S in Year 1 with a $100 contribution. S has $100 of earnings and profits for Year 1 and no earnings and profits for Year 2. During Year 2, S declares and distributes a $50 dividend to P.

(b) *Analysis.* Under paragraph (b)(1) of this section, S's $100 of earnings and profits for Year 1 increases P's earnings and profits for Year 1. P has no additional earnings and profits for Year 2 as a result of the $50 distribution in Year 2, because there is a $50 increase in P's earnings and profits as a result of the receipt of the dividend and a corresponding $50 decrease in S's earnings and profits under section 312(a) that is reflected in P's earnings and profits under paragraph (b)(1) of this section.

(c) *Distribution of current earnings and profits.* The facts are the same as in paragraph (a) of this *Example 1*, except that S distributes the $50 dividend at the end of Year 1 rather than during Year 2. Under paragraph (b)(1) of this section, P's earnings and profits are increased by $100 (S's $50 of undistributed earnings and profits, plus P's receipt of the $50 distribution). Thus, S's earnings and profits increase by $50 and P's earnings and profits increase by $100.

(d) *Affiliated earnings and profits.* The facts are the same as in paragraph (a) of this *Example 1*, except that P and S do not begin filing consolidated returns until Year 2. Because P and S file separate returns for Year 1, P's basis in S's stock remains $100 under § 1.1502–32 and this section, S has $100 of earnings and profits, and none of S's earnings and profits is reflected in P's earnings and profits under paragraph (b) of this section. S's distribution in Year 2 ordinarily would reduce S's earnings and profits but not increase P's earnings and profits. (P's $50 of earnings and profits from the dividend would be offset by S's $50 reduction in earnings and profits that tiers up under paragraph (b) of this section.) However, under paragraph (b)(2) of this section, the negative adjustment for S's distribution to P does not apply. Thus, S's distribution reduces its earnings and profits by $50 but increases P's earnings and profits by $50. (If S's earnings and profits had been accumulated in a separate return limitation year, paragraph (b)(2) of this section would not apply and the distribution would reduce S's earnings and profits but not increase P's earnings and profits.)

(e) *Earnings and profits deficit.* Assume instead that after P forms S in Year 1 with a $100 contribution, S borrows additional funds and has a $150 deficit in earnings and profits for Year 1. The corresponding loss for

tax purposes is not absorbed in Year 1, and is included in the group's consolidated net operating loss carried forward to Year 2. Under paragraph (b)(1) of this section, however, S's $150 deficit in earnings and profits decreases P's earnings and profits for Year 1 by $150. (Absorption of the loss in a later tax year has no effect on the earnings and profits of P and S.)

Example 2. Section 355 distribution. (a) *Facts.* P owns all of S's stock and S owns all of T's stock. For Year 1, T has $100 of earnings and profits. Under paragraph (b)(1) of this section, the earnings and profits of T tier up to S and to P. S and P have no other earnings and profits for Year 1. S distributes T's stock to P at the end of Year 1 in a distribution to which section 355 applies.

(b) *Analysis.* Because S's distribution of T's stock is a distribution to which section 355 applies, the applicable principles of § 1.1502–32(b)(2)(iv) do not require P's earnings and profits to be adjusted by reason of the distribution. In addition, although S's earnings and profits may be reduced under section 312(h) as a result of the distribution, the applicable principles of § 1.1502–32(b)(3)(iii) do not require P's earnings and profits to be adjusted to reflect this reduction in S's earnings and profits.

Example 3. Allocating earnings and profits among shares. P owns 80% of S's stock throughout Year 1. For Year 1, S has $100 of earnings and profits. Under paragraph (b)(1) of this section, $80 of S's earnings and profits is allocated to P based on P's ownership of S's stock. Accordingly, $80 of S's earnings and profits for Year 1 is reflected in P's earnings and profits for Year 1.

(c) *Special rules.* For purposes of this section—

(1) *Stock of members.* For purposes of determining P's earnings and profits from the disposition of S's stock, P's basis in S's stock is adjusted to reflect S's earnings and profits determined under paragraph (b) of this section, rather than under § 1.1502–32. For example, P's basis in S's stock is increased by positive earnings and profits and decreased by deficits in earnings and profits. Similarly, P's basis in S's stock is not reduced for distributions to which paragraph (b)(2) of this section applies (affiliated earnings and profits). P may have an excess loss account in S's stock for earnings and profits purposes (whether or not there is an excess loss account under § 1.1502–32), and the excess loss account is determined, adjusted, and taken into account in accordance with the principles of §§ 1.1502–19 and 1.1502–32.

(2) *Intercompany transactions.* Earnings and profits from a transaction to which § 1.1502–13, § 1.1502–13T, § 1.1502–14, or § 1.1502–14T applies are not reflected before they are taken into account under the applicable principles of those sections.

(3) *Example.* The principles of this paragraph (c) are illustrated by the following example.

Example. Adjustments to stock basis. (a) *Facts.* P forms S in Year 1 with a $100 contribution. For Year 1, S has $75 of taxable income and $100 of earnings and profits. For Year 2, S has no taxable income or earnings and profits, and S declares and distributes a $50 dividend to P. P sells all of S's stock for $150 at the end of Year 2.

(b) *Analysis.* Under paragraph (c)(1) of this section, P's basis in S's stock for earnings and profits purposes immediately before the sale is $150 (the $100 initial basis, plus S's $100 of earnings and profits for Year 1, minus the $50 distribution of earnings and profits in Year 2). Thus, P recognizes no gain or loss from the sale of S's stock for earnings and profits purposes.

(c) *Earnings and profits deficit.* Assume instead that S has a $100 tax loss and earnings and profits deficit for Year 1. The tax loss is not absorbed in Year 1 and is included in the group's consolidated net operating loss carried forward to Year 2. Under paragraph (b) of this section, S's $100 deficit in earnings and profits decreases P's earnings and profits for Year 1. Under paragraph (c) of this section, P decreases its basis in S's stock for purposes of determining earnings and profits from $100 to $0. (If S had borrowed an additional $50 that it also lost in Year 1, P would have decreased its earnings and profits for Year 1 by the additional $50, and P would have had a $50 excess loss account in S's stock for earnings and profits purposes, which would be taken into account in determining P's earnings and profits from its sale of S's stock.)

(d) *Affiliated earnings and profits.* Assume instead that P and S do not begin filing consolidated returns until Year 2. Under paragraph (b) of this section, the negative adjustment under § 1.1502–32(b) for distributions does not apply to S's distribution of earnings and profits accumulated in a separate return year that is a not separate return limitation year. Thus, P's basis in S's stock for earnings and profits purposes remains $100, and P has $50 of earnings and profits from the sale of S's stock.

(d) *Federal income tax liability*—(1) *In general*—(i) *Extension of tax allocations.* Section 1552 allocates the tax liability of a consolidated group among its members for purposes of determining the amounts by which their earnings and profits are reduced for taxes. Section 1552 does not reflect the absorption by one member of another member's tax attributes (e.g., losses, deductions and credits). For example, if P's $100 of income is offset by S's $100 of deductions, consolidated tax liability is $0 and no amount is allocated under section 1552. However, the group may elect under this paragraph (d) to allocate additional amounts to reflect the absorption by one member of the tax attributes of another member. Permissible methods are set forth in paragraphs (d)(2) through (4) of this section, and election procedures are provided in paragraph (d)(5) of this section. Allocations under this paragraph (d) must be reflected annually on permanent records (including work papers). Any computations of separate return tax liability are subject to the principles of section 1561.

(ii) *Effect of extended tax allocations.* The amounts allocated under this paragraph (d) are treated as allocations of tax liability for purposes of § 1.1552–1(b)(2). For example, if P's taxable income is offset by S's loss, and tax liability is allocated under the percentage method of paragraph (d)(3) of this section, P's earnings and profits are reduced as if its income were subject to tax, P is treated as liable to S for the amount of the tax, and corresponding adjustments are made to S's earnings and profits. If the liability of one member to another is not paid, the amount not paid generally is treated as a distribution, contribution, or both, depending on the relationship between the members.

(2) *Wait-and-see method.* The wait-and-see method under this paragraph (d)(2) is derived from Securities and Exchange Commission procedures. In the year that a member's tax attribute is absorbed, the group's consolidated tax liability is allocated in accordance with the group's method under section 1552. When, in effect, the member with the tax attribute could have absorbed the attribute on a separate return basis in a later year, a portion of the group's consolidated tax liability for the later year that is otherwise allocated to members under section 1552 is reallocated. The reallocation takes into account all consolidated return years to which this paragraph (d) applies (the computation period), and is determined by comparing the tax allocated to a member during the computation period with the member's tax liability determined as if it had filed separate returns during the computation period.

(i) *Cap on allocation under section 1552.* A member's allocation under section 1552 for a tax year may not exceed the excess, if any, of—

(A) The total of the tax liabilities of the member for the computation period (including the current year), determined as if the member had filed separate returns; over

(B) The total amount allocated to the member under section 1552 and this paragraph (d) for the computation period (except the current year).

(ii) *Reallocation of capped amounts.* To the extent that the amount allocated to a member under section 1552 exceeds the limitation under paragraph (d)(2)(i)

of this section, the excess is allocated among the remaining members in proportion to (but not to exceed the amount of) each member's excess, if any, of—

(A) The total of the tax liabilities of the member for the computation period (including the current year), determined as if the member had filed separate returns; over

(B) The total amount allocated to the member under section 1552 and this paragraph (d) for the computation period (including for the current year only the amount allocated under section 1552).

(iii) *Reallocation of excess capped amounts.* If the reductions under paragraph (d)(2)(i) of this section exceed the amounts allocable under paragraph (d)(2)(ii) of this section, the excess is allocated among the members in accordance with the group's method under section 1552 without taking this paragraph (d)(2) into account.

(3) *Percentage method.* The percentage method under this paragraph (d)(3) allocates tax liability based on the absorption of tax attributes, without taking into account the ability of any member to subsequently absorb its own tax attributes. The allocation under this method is in addition to the allocation under section 1552.

(i) *Decreased earnings and profits.* A member's allocation under section 1552 for any year is increased, thereby decreasing its earnings and profits, by a fixed percentage (not to exceed 100%) of the excess, if any, of—

(A) The member's separate return tax liability for the consolidated return year as determined under § 1.1552–1(a)(2)(ii); over

(B) The amount allocated to the member under section 1552.

(ii) *Increased earnings and profits.* An amount equal to the total decrease in earnings and profits under paragraph (d)(3)(i) of this section (including amounts allocated as a result of a carryback) increases the earnings and profits of the members whose attributes are absorbed, and is allocated among them in a manner that reasonably reflects the absorption of the tax attributes.

(4) *Additional methods.* The absorption by one member of the tax attributes of another member may be reflected under any other method approved in writing by the Commissioner.

(5) *Election of allocation method*—(i) *In general.* Tax liability may be allocated under this paragraph (d) only if an election is filed with the group's first return. The election must—

(A) Be made in a separate statement entitled "ELECTION TO ALLOCATE TAX LIABILITY UNDER § 1.1502–33(d)";

(B) State the allocation method elected under § 1.1502–33(d) and under section 1552;

(C) If the percentage method is elected, state the percentage (not to exceed 100%) to be used; and

(D) If a method is permitted under paragraph (d)(4) of this section, attach evidence of approval of the method by the Commissioner.

(ii) *Consent*—(A) *Electing or changing methods.* An election for a later year, or an election to change methods, may be made only with the written consent of the Commissioner.

(B) *Prior law elections.* An election in effect for the last tax year beginning before January 1, 1995, remains in effect under this section. However, a group may elect to conform its earnings and profits computations to the method described in § 1.1502–32(b)(3)(iv)(D) (the percentage method, using a 100% allocation), whether or not it has previously made an election for earnings and profits purposes. If a conforming election is made, the group must make all adjustments necessary to prevent amounts from being duplicated or omitted. The conforming election is made by attaching a statement entitled "ELECTION TO CONFORM TAX ALLOCATIONS UNDER §§ 1.1502–32 and 1.1502–33(d)" to the consolidated group's return for its first tax year beginning on or after January 1, 1995. The statement must be signed by the common parent, and must specify whether the method is conformed only for years beginning on or after January 1, 1995 or as if the method were in effect for all prior years. The statement must also describe the adjustments made by reason of the change (e.g., to reflect prior use of earnings and profits).

(6) *Examples.* The principles of this paragraph (d) are illustrated by the following examples.

Example 1. Wait-and-see method. (a) *Facts.* P owns all of the stock of S1 and S2. The P group uses the wait-and-see method of allocation under paragraph (d)(2) of this section in conjunction with § 1.1552–1(a)(1). For Year 1, each member's taxable income, both for purposes of § 1.1552–1(a)(1) and redetermined as if the member had filed separate returns, is as follows: P $0, S1 $2,000, and S2 ($1,000). Thus, the P group's consolidated tax liability for Year 1 is $340 (assuming a 34% tax rate).

(b) *Analysis.* Under § 1.1552–1(a)(1)(i), the tax liability of the P group is allocated among the members in accordance with the portion of the consolidated taxable income attributable to each member having taxable income. Thus, all of the P group's $340 consolidated tax liability is allocated to S1. As a result, S1 decreases its earnings and profits under section 1552 by $340 (even if S1 does not pay the tax liability). No further allocations are made under paragraph (d)(2) of this section because S2 cannot yet absorb its loss on a separate return basis.

(c) *Payment of tax liability.* If S1 pays the $340 tax liability, there is no further effect on the income, earnings and profits, or stock basis of any member. If P pays the $340 tax liability (and the payment is not a loan from P to S1), P is treated as making a $340 contribution to the capital of S1; if S2 pays the $340 tax liability (and the payment is not a loan from S2 to S1), S2 is treated as making a $340 distribution to P with respect to its stock, and P is treated as making a $340 contribution to the capital of S1. See § 1.1552–1(b)(2).

(d) *Year 2.* For Year 2, each member's taxable income, under § 1.1552–1(a)(1)(ii) and redetermined as if the member had filed separate returns, without taking into account any carryover from Year 1, is as follows: P $0, S1 $1,000, and S2 $3,000. Thus, the P group's consolidated tax liability for Year 2 is $1,360 (assuming a 34% tax rate). Of this amount, section 1552 would allocate $340 to S1 and $1,020 to S2. However, under paragraph (d)(2)(i) of this section, no more than $680 may be allocated to S2. This is because S2 would have had an aggregate tax liability of $680 if it had filed separate returns for Years 1 and 2 (a $0 tax liability for Year 1, and a $680 tax liability for Year 2, taking into account a $1,000 net operating loss carryover from Year 1). Under paragraph (d)(2)(ii) of this section, the entire excess of $340 which would otherwise be allocated to S2 under § 1.1552–1(a)(1) is allocated to S1 This is because S1 would have had an additional $340 of aggregate tax liability if it had filed separate returns for Years 1 and 2 (a $680 tax liability for Year 1, and a $340 tax liability for Year 2, not taking into account S2's $1,000 net operating loss for Year 1). The effect of the allocation of $680 to S1 and $680 to S2 is determined under § 1.1552–1(b)(2).

Example 2. Percentage method. (a) *Facts.* The facts are the same as in *Example 1*, but the P group uses the percentage method of allocation under paragraph (d)(3) of this section, with a percentage of 100%. In addition, the taxable incomes and losses of the members are the same if computed as provided in § 1.1552–1(a)(2)(ii).

(b) *Analysis.* Under § 1.1552–1(a)(2)(ii), $340 of tax liability is allocated to S1 for Year 1. Under paragraph (d)(3)(i) of this section, S1 is allocated another $340 of tax liability because S1 would have had a $680 tax liability if it had filed separate returns but only $340 is allocated to S1 under section 1552. Thus, S1's earnings and profits are decreased by the $680 total. Under paragraph (d)(3)(ii) of this section, S2's earnings and profits are increased by $340 because the additional $340 allocated to S1 under paragraph (d)(3)(i) of this section is attributable to the absorption of S2's losses.

(c) *Payment of tax liability.* If S1 pays the $340 tax liability of the P group and pays $340 to S2, the Year 1 tax liability results in no further adjustments to the income,

earnings and profits, or basis of any member's stock. If S1 pays the $340 tax liability of the P group and pays the other $340 to P instead of S2 because, for example, of an agreement among the members, S2 is treated as distributing $340 to P with respect to its stock in the year that S1 makes the payment to P. See § 1.1552–1(b)(2).

(d) *Year 2.* For Year 2, $340 is allocated to S1 and $1,020 is allocated to S2 under section 1552. No additional amounts are allocated under paragraph (d)(3) of this section.

(e) *Deconsolidations*—(1) *In general.* Immediately before it becomes a nonmember, S's earnings and profits are eliminated to the extent they were taken into account by any member under this section. If S's earnings and profits are eliminated under this paragraph (e)(1), no corresponding adjustment is made to the earnings and profits of P (or any other member) under paragraph (b) of this section or to any basis in a member's stock under paragraph (c) of this section. For this purpose, S is treated as becoming a nonmember on the first day of its first separate return year (including another group's consolidated return year).

(2) *Acquisition of group*—(i) *Application.* This paragraph (e)(2) applies only if a consolidated group (the terminating group) ceases to exist as a result of—

(A) The acquisition by a member of another consolidated group of either the assets of the common parent of the terminating group in a reorganization described in section 381(a)(2), or the stock of the common parent of the terminating group; or

(B) The application of the principles of § 1.1502–75(d)(2) or (d)(3).

(ii) *General rule.* Paragraph (e)(1) of this section does not apply solely by reason of the termination of a group because it is acquired, if there is a surviving group that is, immediately thereafter, a consolidated group. Instead, the surviving group is treated as the terminating group for purposes of applying this paragraph (e) to the terminating group. This treatment does not apply, however, to members of the terminating group that are not members of the surviving consolidated group immediately after the terminating group ceases to exist (e.g., under section 1504(a)(3) relating to reconsolidation, or section 1504(c) relating to includible insurance companies).

(3) *Certain corporate separations and reorganizations.* The adjustments under paragraph (e)(1) of this section must be modified to the extent necessary to effectuate the principles of section 312(h). Thus, P's earnings and profits rather than S's earnings and profits may be eliminated immediately before S becomes a nonmember. P's earnings and profits are eliminated to the extent that its earnings and profits reflect S's earnings and profits after applying section 312(h) immediately after S becomes a nonmember (determined without taking this paragraph (e) into account).

(4) *Special uses of earnings and profits.* Paragraph (e)(1) of this section does not apply for purposes of determining—

(i) The extent to which a distribution is charged to reserve accounts under section 593(e);

(ii) The extent to which a distribution is taxable to the recipient under sections 805(a)(4) and 832; and

(iii) Any other special use identified in guidance published in the Internal Revenue Bulletin.

(5) *Example.* The principles of this paragraph (e) are illustrated by the following example.

Example. (a) *Facts.* Individuals A and B own all of P's stock, and P owns all of the stock of S and T, each with a $500 basis. For Year 1, S has $100 of earnings and profits and T has $50 of earnings and profits. Under paragraph (b)(1) of this section, the earnings and profits of S and T tier up to P, and P has $150 of earnings and profits for Year 1. P sells all of S's stock for $600 at the close of Year 1.

(b) *Analysis.* Under paragraph (e)(1) of this section, S's $100 of earnings and profits is eliminated immediately before S becomes a nonmember because the earnings and profits are taken into account under paragraph (b) of this section in P's earnings and profits. However, no corresponding adjustment is made to P's earnings and profits or to P's basis in S's stock for purposes of earnings and profits. P's earnings and profits for Year 1 remain $150 following the sale of S's stock.

(c) *Forward merger.* The facts are the same as in paragraph (a) of this *Example*, except that, rather than P selling S's stock, S merges into a nonmember in a transaction described in section 368(a)(2)(D). Under paragraph (h) of this section, the nonmember is treated as a successor to S. Thus, as in paragraph (b) of this *Example*, S's $100 of earnings and profits is eliminated immediately before S ceases to be a member.

(d) *Acquisition of entire group.* The facts are the same as in paragraph (a) of this *Example*, except that X, the common parent of another consolidated group, purchases all of P's stock at the close of Year 1, and P sells S's stock during Year 3. Under paragraph (e)(2) of this section, the earnings and profits of S and T are not eliminated as a result of X purchasing P's stock. However, S's earnings and profits from consolidated return years of both the P group and the X group are eliminated immediately before S becomes a nonmember of the X group.

(e) *Earnings and profits deficit.* The facts are the same as in paragraph (d) of this *Example*, except that S has a $550 deficit in earnings and profits for Year 1. The effect of paragraph (e)(1) of this section is the same. Under paragraph (c)(1) of this section, P would have an excess loss account in S's stock for earnings and profits purposes under the principles of §§ 1.1502–19 and 1.1502–32, and, under the principles of § 1.1502–19(c)(2), the excess loss account is not taken into account as a result of X's purchase of P's stock. Under paragraph (e)(2) of this section, S's deficit is not eliminated under paragraph (e)(1) of this section immediately before X's purchase of P's stock. However, S's earnings and profits (or deficit) is eliminated immediately before S becomes a nonmember of the X group.

(f) *Section 355 distribution.* The facts are the same as in paragraph (a) of this *Example*, except that, rather than selling S's stock, P distributes S's stock to A at the close of Year 1 in a distribution to which section 355 applies. Under paragraph (e)(3) of this section, P's earnings and profits may be reduced under section 312(h) as a result of the distribution. To the extent that P's earnings and profits are reduced, S's earnings and profits are not eliminated under paragraph (e)(1) of this section.

(f) *Changes in the structure of the group*—(1) *Changes in the common parent*—(i) *General rule.* If P succeeds another corporation under the principles of § 1.1502–75(d) (2) or (3) as the common parent of a consolidated group (a group structure change), the earnings and profits of P are adjusted immediately after P becomes the new common parent to reflect the earnings and profits of the former common parent immediately before the former common parent ceases to be the common parent. The adjustment is made as if P succeeds to the earnings and profits of the former common parent in a transaction described in section 381(a). See § 1.1502–31 for the basis of the stock of members following a group structure change.

(ii) *Minority shareholders.* If the former common parent's stock is not wholly owned by members of the consolidated group immediately after the former common parent ceases to be the common parent, appropriate adjustments must be made to reflect in the new common parent only an allocable part of the former common parent's earnings and profits.

(iii) *Higher-tier members.* To the extent that earnings and profits are adjusted under this paragraph (f)(1), and the former common parent is owned by members other than P, the earnings and profits of the intermediate subsidiaries must be adjusted in accordance with the principles of this section.

(iv) *Example.* The principles of this paragraph (f)(1) are illustrated by the following example.

Example. (a) *Facts.* X is the common parent of a consolidated group with $100 of earnings and profits, and P is the common parent of another consolidated group with $20 of

earnings and profits. P acquires all of X's stock at the close of Year 1 in exchange for 70% of P's stock. The exchange is a reverse acquisition under § 1.1502–75(d)(3), and the X group is treated as remaining in existence with P as its new common parent.

(b) *Adjustments for X group earnings and profits.* Under paragraph (f)(1) of this section, P's earnings and profits are adjusted immediately after P becomes the new common parent, to reflect X's $100 of earnings and profits immediately before X ceases to be the common parent. The adjustment is made as if P succeeds to X's earnings and profits in a transaction described in section 381(a). Thus, immediately after the acquisition, P has $120 of accumulated earnings and profits and X continues to have $100 of accumulated earnings and profits.

(c) *Adjustments for P group earnings and profits.* Although the P group terminates on P's acquisition of X's stock, under paragraph (e)(2) of this section, no adjustments are made to the earnings and profits of any subsidiaries in the terminating P group.

(d) *Acquisition of separate return corporation.* The facts are the same as in paragraph (a) of this *Example*, except that, immediately before the acquisition of its stock by P, X is not affiliated with any other corporation. The exchange is a reverse acquisition under § 1.1502–75(d)(3), and P is treated as the common parent of the X group. Consequently, the results are the same as in paragraphs (b) and (c) of this *Example*.

(2) *Change in the location of subsidiaries.* If the location of a member within a group changes, appropriate adjustments must be made to the earnings and profits of the members to prevent the earnings and profits from being eliminated. For example, if P transfers all of S's stock to another member in a transaction to which section 351 and § 1.1502–13 apply, the transferee's earnings and profits are adjusted immediately after the transfer to reflect S's earnings and profits immediately before the transfer from consolidated return years. On the other hand, if the transferee purchases S's stock from P, the transferee's earnings and profits are not adjusted.

(g) *Anti-avoidance rule.* If any person acts with a principal purpose contrary to the purposes of this section, to avoid the effect of the rules of this section or apply the rules of this section to avoid the effect of any other provision of the consolidated return regulations, adjustments must be made as necessary to carry out the purposes of this section.

(h) *Predecessors and successors.* For purposes of this section, any reference to a corporation or to a share includes a reference to a successor or predecessor as the context may require. A corporation is a successor if its earnings and profits are determined, directly or indirectly, in whole or in part, by reference to the earnings and profits of another corporation (the predecessor). A share is a successor if its basis is determined, directly or indirectly, in whole or in part, by reference to the basis of another share (the predecessor).

(i) [Reserved]

(j) *Effective date*—(1) *General rule.* This section applies with respect to determinations of the earnings and profits of a member (e.g., for purposes of a characterizing a distribution to which section 301 applies) in consolidated return years beginning on or after January 1, 1995. If this section applies, earnings and profits must be determined or redetermined as if this section were in effect for all years (including, for example, the consolidated return years of another consolidated group to the extent the earnings and profits from those years are still reflected). For example, if a distribution by P to a nonmember shareholder in 1990 was a dividend because of an unabsorbed loss carryover attributable to S, P's earnings and profits in tax years beginning after January 1, 1995 are redetermined by taking into account a negative adjustment in the tax year S's loss arose and in 1990 for P's distribution, and any subsequent absorption of the loss has no effect on earnings and profits. Any such determination or redetermination does not, however, affect any prior period. Thus, the shareholder's treatment in 1990 of the distribution as a dividend (and the effect of the distribution on stock basis) is not redetermined under this section.

(2) *Dispositions of stock before effective date*—(i) *In general.* If P disposes of stock of S in a consolidated return year beginning before January 1, 1995, the amount of P's earnings and profits with respect to S are not redetermined under paragraph (j)(1) of this section. See § 1.1502–19 as contained in the 26 CFR part 1 edition revised as of April 1, 1994 for the definition of disposition, and paragraph (j)(5) of this section for the rules applicable to such dispositions.

(ii) *Lower-tier members.* Although P disposes of S's stock in a tax year beginning before January 1, 1995, S's determinations or adjustments with respect to lower-tier members with which it continues to file a consolidated return are redetermined in accordance with the rules of this section (even if S's earnings and profits were previously taken into account by P). For example, assume that P owns all of S's stock, S owns all of T's stock, and T owns all of U's stock. If S sells 80% of T's stock in a tax year beginning before January 1, 1995 (the effective date), the amount of S's earnings and profits from the sale, and the adjustments to stock basis for earnings and profits purposes that are reflected in that amount, are not redetermined if P sells S's stock after the effective date. If S sells the remaining 20% of T's stock after the effective date, S's stock basis adjustments with respect to that T stock are also not redetermined because T became a nonmember before the effective date. However, if T and U continue to file a consolidated return with each other, paragraph (e)(1) of this section did not apply, and T sells U's stock after the effective date, T's earnings and profits with respect to U are redetermined (even though some of the earnings and profits may have been taken into account by S in its prior sale of T's stock before the effective date).

(iii) *Deferred amounts.* For purposes of this paragraph (j)(2), a disposition does not include a transaction to which § 1.1502–13, § 1.1502–13T, § 1.1502–14, or § 1.1502–14T applies. Instead, the transaction is deemed to occur as the earnings and profits (if any) are taken into account.

(3) *Deconsolidations and group structure changes*—(i) *In general* Paragraphs (e) and (f) of this section apply with respect to deconsolidations and group structure changes occurring in consolidated return years beginning on or after January 1, 1995.

(ii) *Prior period group structure changes.* If there was a group structure change in a consolidated return year beginning before January 1, 1995, and earnings and profits were not determined under § 1.1502–33T(a) as contained in the 26 CFR part 1 edition revised as of April 1, 1994, a distribution in a tax year ending after September 7, 1988, of earnings and profits that are not reflected in the earnings and profits of the distributee member, but would have been so reflected if § 1.1502–33T(a) as contained in the 26 CFR part 1 edition revised as of April 1, 1994 had applied, the negative adjustment under paragraph (b) of this section for distributions does not apply (and there is therefore no offset to the increase in the earnings and profits of the distributee).

(4) *Deemed dividend elections.* If there is a deemed distribution and recontribution pursuant to § 1.1502–32(f)(2) as contained in the 26 CFR part 1 edition revised as of April 1, 1994 in a consolidated return year beginning before January 1, 1995, the deemed distribution and recontribution under the election are treated as an actual distribution by S and recontribution by P as provided under the election.

(5) *Prior law.* For prior determinations, see prior regulations under section 1502 as in effect with

respect to the determination. See, e.g., §§ 1.1502–33 and 1.1502–33T as contained in the 26 CFR part 1 edition revised as of April 1, 1994.

§ 1.1502–33T [Removed]

Par. 16. Section 1.1502–33T is removed.

Par. 17. Section 1.1502–75 is amended by revising the first sentence of paragraph (d)(1) to read as follows:

§ 1.1502–75 Filing of consolidated returns.

* * * * *

(d) * * *

(1) * * * A group remains in existence for a tax year if the common parent remains as the common parent and at least one subsidiary that was affiliated with it at the end of the prior year remains affiliated with it at the beginning of the year, whether or not one or more corporations have ceased to be subsidiaries at any time after the group was formed. * * *

* * * * *

Par. 18. Section 1.1502–76 is amended by:

1. Revising paragraph (b).
2. Removing paragraph (d).
3. The revision reads as follows:

§ 1.1502–76 Taxable year of members of group.

* * * * *

(b) *Items included in the consolidated return*—(1) *General rules*—(i) *In general.* A consolidated return must include the common parent's items of income, gain, deduction, loss, and credit for the entire consolidated return year, and each subsidiary's items for the portion of the year for which it is a member. If the consolidated return includes the items of a corporation for only a portion of its tax year determined without taking this section into account, items for the portion of the year not included in the consolidated return must be included in a separate return (including the consolidated return of another group). The rules of this paragraph (b) must be applied to prevent the duplication or elimination of the corporation's items.

(ii) *The day a corporation becomes or ceases to be a member*—(A) *End of the day rule.* If a corporation (S) becomes or ceases to be a member during a consolidated return year, it becomes or ceases to be a member at the end of the day on which its status as a member changes, and its tax year ends for all Federal income tax purposes at the end of that day. Appropriate adjustments must be made if another provision of the Internal Revenue Code or the regulations thereunder contemplates the event occurring before or after S's change in status. For example, S's items restored under § 1.1502–13 immediately before it becomes a nonmember are taken into account in determining the basis of S's stock under § 1.1502–32. On the other hand, if a section 338(g) election is made in connection with S becoming a member, the deemed asset sale under that section takes place before S becomes a member. See § 1.338–1(e)(5) (deemed sale excluded from purchasing corporation's consolidated return.)

(B) *Next day rule.* If, on the day of S's change in status as a member, a transaction occurs that is properly allocable to the portion of S's day after the event resulting in the change, S and all persons related to S under section 267(b) immediately after the event must treat the transaction for all Federal income tax purposes as occurring at the beginning of the following day. A determination as to whether a transaction is properly allocable to the portion of S's day after the event will be respected if it is reasonable and consistently applied by all affected persons. In determining whether an allocation is reasonable, the following factors are among those to be considered—

(*1*) Whether income, gain, deduction, loss, and credit are allocated inconsistently (e.g., to maximize a seller's stock basis adjustments under § 1.1502–32);

(*2*) If the item is from a transaction with respect to S stock, whether it reflects ownership of the stock before or after the event (e.g., if a member transfers encumbered land to nonmember S in exchange for additional S stock in a transaction to which section 351 applies and the exchange results in S becoming a member of the consolidated group, the applicability of section 357(c) to the exchange must be determined under § 1.1502–80(d) by treating the exchange as occurring after the event; on the other hand, if S is a member but has a minority shareholder and becomes a nonmember as a result of its redemption of stock with appreciated property, S's gain under section 311 is treated as from a transaction occurring before the event);

(*3*) Whether the allocation is inconsistent with other requirements under the Internal Revenue Code (e.g., if a section 338(g) election is made in connection with a group's acquisition of S, the deemed asset sale must take place before S becomes a member and S's gain or loss with respect to its assets must be taken into account by S as a nonmember); and

(*4*) Whether other facts exist, such as a prearranged transaction or multiple changes in S's status, indicating that the transaction is not properly allocable to the portion of S's day after the event resulting in S's change.

(C) *Successor corporations.* For purposes of this paragraph (b)(1)(ii), any reference to a corporation includes a reference to a successor or predecessor as the context may require. A corporation is a successor if the basis of its assets is determined, directly or indirectly, in whole or in part, by reference to the basis of the assets of another corporation (the predecessor). For example, if a member forms S, S is treated as a member from the beginning of its existence.

(iii) *Group structure changes.* If the common parent ceases to be the common parent but the group remains in existence, adjustments must be made in accordance with the principles of § 1.1502–75(d)(2) and (3).

(2) *Determination of items included in separate and consolidated returns*—(i) *In general.* The returns for the years that end and begin with S becoming (or ceasing to be) a member are separate tax years for all Federal income tax purposes. The returns are subject to the rules of the Internal Revenue Code applicable to short periods, as if S ceased to exist on becoming a member (or first existed on becoming a nonmember). For example, cost recovery deductions under section 168 must be allocated for short periods. On the other hand, annualization under section 443 is not required of S solely because it has a short year as a result of becoming a member. (Similarly, section 443 applies with respect to a consolidated return only to the extent that the group's return is for a short period and section 443 applies without taking this paragraph (b) into account.)

(ii) *Ratable allocation of a year's items*—(A) *Application.* Although the periods ending and beginning with S's change in status are different tax years, items (other than extraordinary items) may be ratably allocated between the periods if—

(*1*) S is not required to change its annual accounting period or its method of accounting as a result of its change in status (e.g., because its stock is sold between consolidated groups that have the same annual accounting periods); and

(*2*) An irrevocable ratable allocation election is made under paragraph (b)(2)(ii)(D) of this section.

(B) *General rule*—(*1*) *Allocation within original year.* Under a ratable allocation election, paragraph (b)(2) of this section applies by allocating to each day of S's original year (S's tax year determined without taking this section

into account) an equal portion of S's items taken into account in the original year, except that extraordinary items must be allocated to the day that they are taken into account. All persons affected by the election must take into account S's extraordinary items and the ratable allocation of S's remaining items in a manner consistent with the election.

(2) *Items to be allocated.* Under ratable allocation, the items to be allocated and their timing, location, character, and source are generally determined by treating the original year as a single tax year, and the items are not subject to the rules of the Internal Revenue Code applicable to short periods (unless the original year is a short period). However, the years ending and beginning with S's change in status are treated as different tax years (and as short periods) with respect to any item carried to or from these years (e.g., a net operating loss carried under section 172) and with respect to the application of section 481.

(3) *Multiple applications.* If this paragraph (b) applies more than once with respect to an original year, adjustments must be made in accordance with the principles of this paragraph (b). For example, if S becomes a member of two different consolidated groups during the same original year and ratable allocation is elected with respect to both groups, ratable allocation is generally determined for both groups by treating the original year as a single tax year; however, if ratable allocation is elected only with respect to the first group, the ratable allocation is determined by treating the original year as a short period that does not include the period that S is a member of the second group. Ratable allocation is not a method of accounting, and ratable allocation with respect to one application of this paragraph (b) to S does not require ratable allocation to be subsequently applied with respect to S.

(C) *Extraordinary items.* An extraordinary item is—

(1) Any item from the disposition or abandonment of a capital asset as defined in section 1221 (determined without the application of any other rules of law);

(2) Any item from the disposition or abandonment of property used in a trade or business as defined in section 1231(b) (determined without the application of any holding period requirement);

(3) Any item from the disposition or abandonment of an asset described in section 1221(1), (3), (4), or (5), if substantially all the assets in the same category from the same trade or business are disposed of or abandoned in one transaction (or series of related transactions);

(4) Any item from assets disposed of in an applicable asset acquisition under section 1060(c);

(5) Any item carried to or from any portion of the original year (e.g., a net operating loss carried under section 172), and any section 481(a) adjustment;

(6) The effects of any change in accounting method initiated by the filing of the appropriate form after S's change in status;

(7) Any item from the discharge or retirement of indebtedness (e.g., cancellation of indebtedness income or a deduction for retirement at a premium);

(8) Any item from the settlement of a tort or similar third-party liability;

(9) Any compensation-related deduction in connection with S's change in status (including, for example, deductions from bonus, severance, and option cancellation payments made in connection with S's change in status);

(10) Any dividend income from a nonmember that S controls within the meaning of section 304 at the time the dividend is taken into account;

(11) Any deemed income inclusion from a foreign corporation, or any deferred tax amount on an excess distribution from a passive foreign investment company under section 1291;

(12) Any interest expense allocable under section 172(h) to a corporate equity reduction transaction causing this paragraph (b) to apply;

(13) Any credit, to the extent it arises from activities or items that are not ratably allocated (e.g., the rehabilitation credit under section 47, which is based on placement in service); and

(14) Any item which, in the opinion of the Commissioner, would, if ratably allocated, result in a substantial distortion of income in any consolidated return or separate return in which the item is included.

(D) *Election.* The election to ratably allocate items under this paragraph (b)(2)(ii) must be made in a separate statement entitled "THIS IS AN ELECTION UNDER § 1.1502–76(b)(2)(ii) TO RATABLY ALLOCATE THE YEAR'S ITEMS OF [insert name and employer identification number of the member]." The statement must be signed by the member and by the common parent of each affected group, and must be filed with the returns including the items for the year's ending and beginning with S's change in status. If two or more members of the same consolidated group, as a consequence of the same plan or arrangement, cease to be members of that group and remain affiliated as members of another consolidated group, an election under this paragraph (b)(2)(ii)(D) may be made only if it is made by each such member. The statement must provide all of the following:

(1) Identify the extraordinary items, their amounts, and the separate or consolidated returns in which they are included.

(2) Identify the aggregate amount to be ratably allocated, and the portion of the amount included in the separate and consolidated returns.

(3) Include the name and employer identification number of the common parent (if any) of each group that must take the items into account.

(iii) *Ratable allocation of a month's items.* If ratable allocation under paragraph (b)(2)(ii) of this section is not elected (e.g., because S is required to change its annual accounting period), this paragraph (b)(2)(iii) may be applied to ratably allocate only S's items taken into account in the month of its change in status, but only if the allocation is consistently applied by all affected persons. The ratable allocation is made by applying the principles of paragraph (b)(2)(ii) of this section under any reasonable method. For example, S may close its books both at the end of the preceding month and at the end of the month of the change, and allocate only its items (other than extraordinary items) from the month of the change. See paragraph (b)(1)(ii)(B) of this section for factors to be considered in determining whether the method is reasonable.

(iv) *Taxes.* To the extent properly taken into account during the member's tax year (determined without the application of this paragraph (b)), Federal, state, local, and foreign taxes are allocated under paragraph (b)(2) of this section on the basis of the items or activities to which the taxes relate. Thus, income tax is allocated based on the inclusion of the income (determined under the principles of this paragraph (b)) to which the tax relates. For example, if a calendar-year domestic corporation has $100 of foreign source dividend income (determined in accordance with United States tax accounting principles but without taking this paragraph (b) into account) that is passive income for purposes of section 904, and $60 of the income is allocated under this paragraph (b) to the period of the calendar year after it becomes a member of a consolidated group, then 60% of the corporation's deemed paid foreign tax credit

associated with its dividend income for the calendar year is taken into account in computing the group's passive basket consolidated foreign tax credit. Similarly, property taxes relate to the ownership of property and are allocated over the period that the property is owned. This paragraph (b)(2)(iv) applies without regard to any determination or allocation by another taxing jurisdiction.

(v) *Passthrough entities*—(A) *In general.* If S is a partner in a partnership or an owner of a similar interest with respect to which items of the entity are taken into account by S, S is treated, solely for purposes of determining the year to which the entity's items are allocated under paragraph (b)(2) of this section, as selling or exchanging its entire interest in the entity immediately before S's change in status.

(B) *Treatment as a conduit.* For purposes of this paragraph (b)(2), if a member (together with other members) would be treated under section 318(a)(2) as owning an aggregate of at least 50% of any stock owned by the passthrough entity, the method that is used to determine the inclusion of the entity's items in the consolidated or separate return must be the same method that is used to determine the inclusion of the member's items in the consolidated or separate return.

(C) *Exception for certain foreign entities.* This paragraph (b)(2)(v) does not apply to any foreign corporation generating the deemed inclusion of income, or to any passive foreign investment company generating a deferred tax amount on an excess distribution under section 1291.

(3) *Anti-avoidance rule.* If any person acts with a principal purpose contrary to the purposes of this paragraph (b), to substantially reduce the Federal income tax liability of any person, adjustments must be made as necessary to carry out the purposes of this section.

(4) *Examples.* For purposes of the examples in this paragraph (b), unless otherwise stated, P and X are common parents of calendar-year consolidated groups, P owns all of the only class of T's stock, T owns no stock of lower-tier members, all persons use the accrual method of accounting, the facts set forth the only corporate activity, all transactions are between unrelated persons, tax liabilities are disregarded, and any election required under paragraph (b)(2) of this section is properly made. The principles of this paragraph (b) are illustrated by the following examples.

Example 1. Items allocated between consolidated and separate returns. (a) *Facts.* P and S are the only members of the P group. P sells all of S's stock to individual A, and S becomes a nonmember on July 1 of Year 2.

(b) *Analysis.* Under paragraph (b)(1) of this section, the P group's consolidated return for Year 2 includes P's income for the entire tax year and S's income for the period from January 1 to June 30, and S must file a separate return for the period from July 1 to December 31.

(c) *Acquisition of another subsidiary before end of tax year.* The facts are the same as in paragraph (a) of this *Example 1*, except that P acquires all the stock of T (which filed a separate return for its year ending on November 30 of Year 1) and T becomes a member on August 1 of Year 2. Under § 1.1502–75(d) and paragraph (b)(1) of this section, the P group's consolidated return for Year 2 includes P's income for the entire year, S's income from January 1 to June 30, and T's income from August 1 to December 31. S must file a separate return that includes its income from July 1 to December 31, and T must file a separate return that includes its income from December 1 of Year 1 to July 31 of Year 2. (If P had acquired T after December 31, the P group that included S is a different group from the P group that includes T, and, for example, the P group that includes T must make a separate election under section 1501 and § 1.1502–75 if consolidated returns are to be filed.)

Example 2. Group structure change. (a) *Facts.* P owns all of the stock of S and T. Shortly after the beginning of Year 1, P merges into T in a reorganization described in section 368(a)(1)(A) (and in section 368(a)(1)(D)), and P's shareholders receive T's stock in exchange for all of P's stock. The P group is treated under § 1.1502–75(d)(2)(ii) as remaining in existence with T as its common parent.

(b) *Analysis.* Under paragraph (b)(1) of this section, the P group's return must include the common parent's items for the entire consolidated return year and, if the common parent ceases to be the common parent but the group remains in existence, appropriate adjustments must be made. Consequently, although P did not exist for all of Year 1, P's items for the portion of Year 1 ending with the merger are treated as the items of the common parent that must be included in the P group's return for Year 1.

(c) *Reverse acquisition.* Assume instead that X acquires all of P's assets in exchange for more than 50% of X's stock in a reorganization described in section 368(a)(1)(D). The reorganization constitutes a reverse acquisition under § 1.1502–75(d)(3), with the X group terminating and the P group surviving with X as its common parent. Consequently, P's items for the portion of Year 1 ending with the acquisition are treated as the items of the common parent that must be included in the P group's return for Year 1, and X's items are treated for purposes of paragraph (b)(1) of this section as the items of a subsidiary included in the P group's return for the portion of Year 1 for which X is a member.

Example 3. Ratable allocation. (a) *Facts.* P sells all of T's stock to X, and T becomes a nonmember on July 1 of Year 1. T engages in the production and sale of merchandise throughout Year 1 and is required to use inventories. The sale is treated as causing T's tax year to end on June 30, and the periods beginning and ending with the sale are treated as two tax years for Federal income tax purposes.

(b) *Analysis.* If ratable allocation under paragraph (b)(2)(ii) of this section is not elected, T must perform an inventory valuation as of the acquisition and also as of the end of Year 1. If ratable allocation is elected, T must perform an inventory valuation only as of the close of Year 1, and T's income from inventory is ratably allocated, along with T's other items that are not extraordinary items, between the P and X consolidated returns.

(c) *Merger into nonmember.* Assume instead that T merges into a wholly owned subsidiary of X in a reorganization described in section 368(a)(2)(D), and P receives 10% of X's stock in exchange for all of T's stock. Under paragraph (b)(2)(ii)(B) of this section, because T's tax year ends on June 30 under section 381(b)(1), T's original year determined without taking paragraph (b) of this section into account also ends on June 30. Consequently, a ratable allocation under paragraph (b)(2)(ii) of this section is the same as an allocation based on closing the books.

Example 4. Net operating loss. P sells all of T's stock to X, T becomes a nonmember on June 30 of Year 1, and ratable allocation under paragraph (b)(2)(ii) of this section is elected. Under ratable allocation, the X group has a $100 consolidated net operating loss for Year 1, all of which is attributable to T. However, because of extraordinary items, T has $100 of income for the portion of Year 1 that T is a member of the P group. Under paragraph (b)(2)(ii)(B)(*2*) of this section, T's loss may be carried back from the X group to the portion of Year 1 that T was a member of the P group. See also section 172 and § 1.1502–21(b). Under paragraph (b)(2)(ii)(C)(*5*) of this section, any item carried to or from any portion of the original year is an extraordinary item, and the loss therefore is not taken into account again in determining the ratable allocation under paragraph (b)(2)(ii) of this section.

Example 5. Employee benefit plans. (a) *Facts.* P sells all of T's stock to X, and T becomes a nonmember on June 30 of Year 1. On March 15 of Year 2, T contributes $100 to its retirement plan, which is a qualified plan under section 401(a). T is not required to make quarterly contributions to the plan for Year 1 under section 412(m). The contribution is made on account of T's taxable period beginning on July 1 of Year 1, and is deemed in accordance with section 404(a)(6) to have been made on the last day of T's taxable period beginning on July 1 of Year 1. Ratable allocation under paragraph (b)(2)(ii) of this section is not elected.

(b) *Analysis.* Under paragraph (b) of this section, the sale is treated as causing T's tax year to end on June 30, and the period beginning on July 1 is treated as a separate annual accounting period for all Federal income tax purposes. T's income from January 1 to June 30 is included in the P group's Year 1 return, and T's income from July 1 to December 31 is included in the X

group's Year 1 return. Thus, the $100 contribution is deductible by T for the period of Year 1 that it is a member of the X group, subject to the applicable limitations of section 404, if a contribution on the last day of that period would otherwise be deductible.

(c) The facts are the same as in paragraph (a) of this *Example 5*, except that, in accordance with section 404(a)(6), $40 of the $100 contribution is made on account of T's taxable period beginning on January 1 of Year 1 and is deemed to be made on the last day of T's taxable period beginning on January 1 of Year 1. The remaining $60 is made on account of T's taxable period beginning on July 1 of Year 1 and is deemed to be made on the last day of T's taxable period beginning on July 1 of Year 1. As in paragraph (b) of this *Example 5*, under paragraph (b) of this section, the sale is treated as causing T's tax year to end on June 30, and the period beginning on July 1 is treated as a separate annual accounting period for all Federal income tax purposes. The $40 portion of the contribution is deductible by T for the period of Year 1 that it is a member of the P group, subject to the applicable limitations of section 404 and provided that a $40 contribution on the last day of that period would otherwise be deductible for that period, and the $60 portion is deductible by T for the period of Year 1 that it is a member of the X group, subject to the same conditions.

(d) *Ratable allocation.* The facts are the same as in paragraph (a) of this *Example 5*, except that P, T, and X elect ratable allocation under paragraph (b)(2)(ii) of this section and T's deduction for the retirement plan contribution is not an extraordinary item. T's deduction may be ratably allocated, subject to the applicable limitations of section 404, and is allowable only if a contribution on the last day of Year 1 otherwise would be deductible for any period in the year. (The results would be the same if S were an unaffiliated corporation when acquired by X, and the due date of its last separate return (including extensions) were before the pension contribution was made on March 15 of Year 2.)

Example 6. Allocation of partnership items. (a) *Facts.* P sells all of T's stock to X, and T becomes a nonmember on June 30 of Year 1. T has a 10% interest in the capital and profits of a calendar-year partnership.

(b) *Analysis.* Under paragraph (b)(2)(v)(A) of this section, T is treated, solely for purposes of determining T's tax year in which the partnership's items are included, as selling or exchanging its entire interest in the partnership as of P's sale of T's stock. Thus, the deemed disposition is not taken into account under section 708, it does not result in gain or loss being recognized by T and T's holding period is unaffected. However, under section 706(a), in determining T's income, T is required to include its distributive share of partnership items for the partnership's year ending within or with T's tax year. Under section 706(c)(2), the partnership's tax year is treated as closing with respect to T for this purpose as of P's sale of T's stock. The allocation of T's distributive share of partnership items must be made under § 1.706–1(c)(2)(ii).

(c) *Controlled partnership.* The facts are the same as in paragraph (a) of this *Example 6*, except that T has a 75% interest in the capital and profits of the partnership. Under paragraph (b)(2)(v)(B) of this section, T's distributive share of the partnership's items is treated as T's items for purposes of paragraph (b)(2) of this section. Thus, if ratable allocation under paragraph (b)(2)(ii) of this section is not elected, T's distributive share of the partnership's items must be determined under § 1.706–1(c)(2)(ii) by an interim closing of the partnership's books. Similarly, if ratable allocation is elected for T's items that are not extraordinary items, T's distributive share of the partnership's nonextraordinary items must also be ratably allocated under § 1.706–1(c)(2)(ii).

(5) *Effective date*—(i) *General rule.* This paragraph (b) applies to corporations becoming or ceasing to be members of consolidated groups on or after January 1, 1995.

(ii) *Prior law.* For prior transactions, see prior regulations under section 1502 as in effect with respect to the transaction. See, e.g., § 1.1502–76(b) and (d) as contained in the 26 CFR part 1 edition revised as of April 1, 1994. However, § 1.1502–76(b)(5) and (6) as contained in the 26 CFR part 1 edition revised as of April 1, 1994 do not apply with respect to corporations becoming or ceasing to be members of consolidated groups on or after January 1, 1995. If both this paragraph (b) and prior law may apply to determine the inclusion of any amount in a return, appropriate adjustments must be made to prevent the omission or duplication of the amount.

* * * * *

Par. 19. Section 1.1502–80 is amended by adding paragraphs (c) and (d) to read as follows:

§ 1.1502–80 Applicability of other provisions of law.

* * * * *

(c) *Deferral of section 165.* For consolidated return years beginning on or after January 1, 1995, stock of a member is not treated as worthless under section 165 before the stock is treated as disposed of under the principles of § 1.1502–19(c)(1)(iii). See §§ 1.1502–15(b) and 1.1502–20 for additional rules relating to stock loss.

(d) *Non-applicability of section 357(c)*—(1) *In general.* Section 357(c) does not apply to any transaction to which § 1.1502–13, § 1.1502–13T, § 1.1502–14, or § 1.1502–14T applies, if it occurs in a consolidated return year beginning on or after January 1, 1995. For example, P, S, and T are members of a consolidated group, P owns all of the stock of S and T with bases of $30 and $20, respectively, S has a $30 basis in its assets and $40 of liabilities, and S merges into T in a transaction described in section 368(a)(1)(A) (and in section 368(a)(1)(D)); section 357(c) does not apply to the merger, P's basis in T's stock increases to $50 ($30 plus $20), and T succeeds to S's $30 basis in the assets transferred subject to the $40 liability. Similarly, if S instead transferred its assets and liabilities to a newly formed subsidiary in a transaction to which section 351 applies, section 357(c) does not apply and S's basis in the subsidiary's stock is a $10 excess loss account. This paragraph (d) does not apply to a transaction if the transferor or transferee becomes a nonmember as part of the same plan or arrangement. The transferor (or transferee) is treated as becoming a nonmember once it is no longer a member of a consolidated group that includes the transferee (or transferor).

(2) *Prior period transactions.* If, in a tax year beginning before January 1, 1995, a member's stock with an excess loss account is transferred in a transaction to which § 1.1502–13, § 1.1502–13T, § 1.1502–14, or § 1.1502–14T applies, paragraph (d)(1) of this section applies to the stock transfer to the extent that the income, gain, deduction, or loss (if any) is not taken into account in a tax year beginning before January 1, 1995. For example, if P, S, and T, are members of a consolidated group, T's stock has an excess loss account, and P transfers the T stock to S in 1993 in a transaction to which section 351 and § 1.1502–13 apply, section 357(c) applies to the transfer only to the extent P's gain is taken into account in tax years beginning before January 1, 1995.

PART 602—OMB CONTROL NUMBERS UNDER THE PAPERWORK REDUCTION ACT

Par. 20. The authority citation for Part 602 continues to read as follows:

Authority: 26 U.S.C. 7805.

§ 602.101 [Amended]

Par. 21. Section 602.101(c) is amended by removing the entries for §§ 1.1502–31T, 1.1502–32T, and 1.1502–33T from the table, adding in numerical order, the entry for § 1.1502–31, and revising the entries for §§ 1.1502–32, 1.1502–33, and 1.1502–76.

CFR part or section where identified and described	Current OMB control No.
* * * * *	
1.1502–31	1545–1344
1.1502–32	1545–*344

CFR part or section where identified and described	Current OMB control No.
1.1502–33	1545–1344
* * * *	*
1.1502–76	1545–1344
* * * *	*

Approved: June 29, 1994.

Margaret Milner Richardson,

Commissioner of Internal Revenue.

Cynthia G. Beerbower,

Deputy Assistant Secretary of the Treasury (Tax Policy).

[FR Doc. 94–19548 Filed 8–12–94; 8:45 am]

BILLING CODE 4830–01–U

PENSION BENEFIT GUARANTY CORPORATION

29 CFR Parts 2619 and 2676

Valuation of Plan Benefits in Single-Employer Plans; Valuation of Plan Benefits and Plan Assets Following Mass Withdrawal; Amendments Adopting Additional PBGC Rates

AGENCY: Pension Benefit Guaranty Corporation.

ACTION: Final rule.

SUMMARY: This final rule amends the Pension Benefit Guaranty Corporation's ("PBGC's") regulations on Valuation of Plan Benefits in Single-Employer Plans and Valuation of Plan Benefits and Plan Assets Following Mass Withdrawal. The former regulation contains the interest assumptions that the PBGC uses to value benefits under terminating single-employer plans. The latter regulation contains the interest assumptions for valuations of multiemployer plans that have undergone mass withdrawal. The amendments set out in this final rule adopt the interest assumptions applicable to single-employer plans with termination dates in September 1994, and to multiemployer plans with valuation dates in September 1994. The effect of these amendments is to advise the public of the adoption of these assumptions.

EFFECTIVE DATE: September 1, 1994.

FOR FURTHER INFORMATION CONTACT: Harold J. Ashner, Assistant General Counsel, Office of the General Counsel, Pension Benefit Guaranty Corporation, 1200 K Street, NW., Washington, DC 20005, 202–326–4024 (202–326–4179 for TTY and TDD). (These are not toll-free numbers.)

SUPPLEMENTARY INFORMATION: This rule adopts the September 1994 interest assumptions to be used under the Pension Benefit Guaranty Corporation's ("PBGC's") regulations on Valuation of Plan Benefits in Single-Employer Plans (29 CFR part 2619, the "single-employer regulation") and Valuation of Plan Benefits and Plan Assets Following Mass Withdrawal (29 CFR part 2676, the "multiemployer regulation").

Part 2619 sets forth the methods for valuing plan benefits of terminating single-employer plans covered under title IV of the Employee Retirement Income Security Act of 1974, as amended ("ERISA"). Under ERISA section 4041(c), all single-employer plans wishing to terminate in a distress termination must value guaranteed benefits and "benefit liabilities," *i.e.*, all benefits provided under the plan as of the plan termination date, using the formulas set forth in part 2619, subpart C. (Plans terminating in a standard termination may, for purposes of the Standard Termination Notice filed with PBGC, use these formulas to value benefit liabilities, although this is not required.) In addition, when the PBGC terminates an underfunded plan involuntarily pursuant to ERISA section 4042(a), it uses the subpart C formulas to determine the amount of the plan's underfunding. Part 2676 prescribes rules for valuing benefits and certain assets of multiemployer plans under sections 4219(c)(1)(D) and 4281(b) of ERISA.

Appendix B to part 2619 sets forth the interest rates and factors under the single-employer regulation. Appendix B to part 2676 sets forth the interest rates and factors under the multiemployer regulation. Because these rates and factors are intended to reflect current conditions in the financial and annuity markets, it is necessary to update the rates and factors periodically.

The PBGC issues two sets of interest rates and factors, one set to be used for the valuation of benefits to be paid as annuities and one set for the valuation of benefits to be paid as lump sums. The same assumptions apply to terminating single-employer plans and to multiemployer plans that have undergone a mass withdrawal. This amendment adds to appendix B to parts 2619 and 2676 sets of interest rates and factors for valuing benefits in single-employer plans that have termination dates during September 1994 and multiemployer plans that have undergone mass withdrawal and have valuation dates during September 1994.

For annuity benefits, the interest rates will be 6.90% for the first 25 years following the valuation date and 5.25% thereafter. For benefits to be paid as lump sums, the interest assumptions to be used by the PBGC will be 5.50% for the period during which benefits are in pay status, 4.75% during the seven years directly preceding the benefit's placement in pay status, and 4.0% during any other years preceding the benefit's placement in pay status. (ERISA section 205(g) and Internal Revenue Code section 417(e) provide that private sector plans valuing lump sums not in excess of $25,000 must use interest assumptions at least as generous as those used by the PBGC for valuing lump sums (and for lump sums exceeding $25,000 must use interest assumptions at least as generous as 120% of the PBGC interest assumptions).) The above annuity interest assumptions represent a decrease (from those in effect for August 1994) of .10 percent for the first 25 years following the valuation date and are otherwise unchanged. The lump sum interest assumptions represent a decrease (from those in effect for August 1994) of .25 percent for the period during which benefits are in pay status and the seven years directly preceding that period; they are otherwise unchanged.

Generally, the interest rates and factors under these regulations are in effect for at least one month. However, the PBGC publishes its interest assumptions each month regardless of whether they represent a change from the previous month's assumptions. The assumptions normally will be published in the **Federal Register** by the 15th of the preceding month or as close to that date as circumstances permit.

The PBGC has determined that notice and public comment on these amendments are impracticable and contrary to the public interest. This finding is based on the need to determine and issue new interest rates and factors promptly so that the rates and factors can reflect, as accurately as possible, current market conditions.

Because of the need to provide immediate guidance for the valuation of benefits in single-employer plans whose termination dates fall during September 1994, and in multiemployer plans that have undergone mass withdrawal and have valuation dates during September 1994, the PBGC finds that good cause exists for making the rates and factors set forth in this amendment effective less than 30 days after publication.

The PBGC has determined that this action is not a "significant regulatory action" under the criteria set forth in Executive Order 12866, because it will not have an annual effect on the economy of $100 million or more or adversely affect in a material way the economy, a sector of the economy,

productivity, competition, jobs, the environment, public health or safety, or State, local, or tribal governments or communities; create a serious inconsistency or otherwise interfere with an action taken or planned by another agency; materially alter the budgetary impact of entitlements, grants, user fees, or loan programs or the rights and obligations of recipients thereof; or raise novel legal or policy issues arising out of legal mandates, the President's priorities, or the principles set forth in Executive Order 12866.

Because no general notice of proposed rulemaking is required for this amendment, the Regulatory Flexibility Act of 1980 does not apply. See 5 U.S.C. 601(2).

List of Subjects

29 CFR Part 2619

Employee benefit plans, Pension insurance, and Pensions.

29 CFR Part 2676

Employee benefit plans, and Pensions.

In consideration of the foregoing, parts 2619 and 2676 of chapter XXVI, title 29, Code of Federal Regulations, are hereby amended as follows:

PART 2619—[AMENDED]

1. The authority citation for part 2619 continues to read as follows:

Authority: 29 U.S.C. 1301(a), 1302(b)(3), 1341, 1344, 1362.

2. In appendix B, Rate Set 11 is added to Table I, and a new entry is added to Table II, as set forth below. The introductory text of both tables is republished for the convenience of the reader and remains unchanged.

Appendix B to Part 2619—Interest Rates Used to Value Lump Sums and Annuities

Lump Sum Valuations

In determining the value of interest factors of the form $v^{O:n}$ (as defined in § 2619.49(b)(1)) for purposes of applying the formulas set forth in § 2619.49 (b) through (i) and in determining the value of any interest factor used in valuing benefits under this subpart to be paid as lump sums (including the return of accumulated employee contributions upon death), the PBGC shall employ the value of i_t set out in Table I hereof as follows:

(1) For benefits for which the participant or beneficiary is entitled to be in pay status on the valuation date, the immediate annuity rate shall apply.

(2) For benefits for which the deferral period is y years (y is an integer and $0 < y \leq n_1$), interest rate i_1 shall apply from the valuation date for a period of y years; thereafter the immediate annuity rate shall apply.

(3) For benefits for which the deferral period is y years (y is an integer and $n_1 < y \leq n_1 + n_2$), interest rate i_2 shall apply from the valuation date for a period of $y - n_1$ years, interest rate i_1 shall apply for the following n_1 years; thereafter the immediate annuity rate shall apply.

(4) For benefits for which the deferral period is y years (y is an integer and $y > n_1 + n_2$), interest rate i_3 shall apply from the valuation date for a period of $y - n_1 - n_2$ years, interest rate i_2 shall apply for the following n_1 years; thereafter the immediate annuity rate shall apply.

TABLE I

[Lump Sum Valuations]

Rate set	For plans with a valuation date		Immediate annuity rate (percent)	Deferred annuities (percent)				
	On or after	Before		i_1	i_2	i_3	n_1	n_2
* * *		*		*	*		*	
11	9–1–94	10–1–94	5.50	4.75	4.00	4.00	7	8

Annuity Valuations

In determining the value of interest factors of the form $v^{t:n}$ (as defined in § 2619.49(b)(1) for purposes of applying the formulas set forth in § 2619.49 (b) through (i) and in determining the value of any interest factor used in valuing annuity benefits under this subpart, the plan administrator shall use the values of i_t prescribed in Table II hereof.

The following table tabulates, for each calendar month of valuation ending after the effective date of this part, the interest rates (denoted by i_1, i_2, , and referred to generally as i_t) assumed to be in effect between specified anniversaries of a valuation date that occurs within that calendar month; those anniversaries are specified in the columns adjacent to the rates. The last listed rate is assumed to be in effect after the last listed anniversary date.

TABLE II

[Annuity Valuations]

For valuation dates occurring in the month—	The values of i_t are:					
	i_t	For t =	i_t	For t =	i_t	For t =
* * *	*		*	*		
September 1994	.0690	1–25	.0525	>25	N/A	N/A

PART 2676—[AMENDED]

3. The authority citation for part 2676 continues to read as follows:

Authority: 29 U.S.C. 1302(b)(3), 1399(c)(1)(D), 1441(b)(1)).

4. In appendix B, Rate Set 11 is added to Table I, and a new entry is added to Table II, as set forth below. The introductory text of both tables is republished for the convenience of the reader and remains unchanged.

Appendix B to Part 2676—Interest Rates Used to Value Lump Sums and Annuities

Lump Sum Valuations

In determining the value of interest factors of the form $v^{O:n}$ (as defined in § 2676.13(b)(1)) for purposes of applying the formulas set forth in § 2676.13 (b) through (i)

and in determining the value of any interest factor used in valuing benefits under this subpart to be paid as lump sums, the PBGC shall use the values of i_t prescribed in Table I hereof. The interest rates set forth in Table I shall be used by the PBGC to calculate benefits payable as lump sum benefits as follows:

(1) For benefits for which the participant or beneficiary is entitled to be in pay status on the valuation date, the immediate annuity rate shall apply.

(2) For benefits for which the deferral period is y years (y is an integer and $0 < y \leq n_1$), interest rate i_1 shall apply from the valuation date for a period of y years; thereafter the immediate annuity rate shall apply.

(3) For benefits for which the deferral period is y years (y is an integer and $n_1 < y \leq n_1 + n_2$), interest rate i_2 shall apply from the valuation date for a period of $y - n_1$ years, interest rate i_1 shall apply for the following n_1 years; thereafter the immediate annuity rate shall apply.

(4) For benefits for which the deferral period is y years (y is an integer and $y > n_1 + n_2$), interest rate i_3 shall apply from the valuation date for a period of $y - n_1 - n_2$ years, interest rate i_2 shall apply for the following n_2 years, interest rate i_1 shall apply for the following n_1 years; thereafter the immediate annuity rate shall apply.

TABLE I

[Lump Sum Valuations]

Rate set	For plans with a valuation date		Immediate annuity rate (percent)	Deferred annuities (percent)				
	On or after	Before		i_1	i_2	i_3	n_1	n_2
* * *	*		*	*		*		*
11	9–1–94	10–1–94	5.50	4.75	4.00	4.00	7	8

Annuity Valuations

In determining the value of interest factors of the form $v^{0,n}$ (as defined in § 2676.13(b)(1)) for purposes of applying the formulas set forth in § 2676.13 (b) through (i) and in determining the value of any interest factor used in valuing annuity benefits under this subpart, the plan administrator shall use the values of i_t prescribed in the table below.

The following table tabulates, for each calendar month of valuation ending after the effective date of this part, the interest rates (denoted by $i_1, i_2, \ldots$, and referred to generally as i_t) assumed to be in effect between specified anniversaries of a valuation date that occurs within that calendar month; those anniversaries are specified in the columns adjacent to the rates. The last listed rate is assumed to be in effect after the last listed anniversary date.

TABLE II

[Annuity Valuations]

For valuation dates occurring in the month—	The values of i_t are:					
	i_t	For t =	i_t	For t +	i_t	For t =
* * * *	*		*		*	
September 1994	.0690	1–25	.0525	>25	N/A	N/A

Issued in Washington, DC, on this 10th day of August 1994.

Martin Slate,

Executive Director, Pension Benefit Guaranty Corporation.

[FR Doc. 94–19880 Filed 8–12–94; 8:45 am]

BILLING CODE 7708–01–M

ENVIRONMENTAL PROTECTION AGENCY

40 CFR Part 52

[MA–20–1–6469; A–1–FRL–5004–4]

Approval and Promulgation of Title V, Section 507, Small Business Stationary Source Technical and Environmental Compliance Assistance Program for Massachusetts

AGENCY: Environmental Protection Agency (EPA).

ACTION: Final rule.

SUMMARY: EPA is conditionally approving a State Implementation Plan (SIP) revision submitted by the Commonwealth of Massachusetts for the purpose of establishing a small business stationary source technical and environmental compliance assistance program (PROGRAM). The SIP revision was submitted by the State to satisfy the Federal mandate to ensure that small businesses have access to the technical assistance and regulatory information necessary to comply with the Clean Air Act (CAA). The rationale for this conditional approval is set forth in this final rule; additional information is available at the address indicated below.

EFFECTIVE DATE: This final rule will become effective on September 14, 1994.

ADDRESSES: Copies of the documents relevant to this action are available for public inspection during normal business hours, by appointment at the Air, Pesticides and Toxics Management Division, U.S. Environmental Protection Agency, Region I, One Congress Street, 10th floor, Boston, MA; Air and Radiation Docket and Information Center, U.S. Environmental Protection Agency, 401 M Street, SW., (LE–131), Washington, DC. 20460; and the Department of Environmental Protection, One Winter Street, 7th floor, Boston, MA 02108.

FOR FURTHER INFORMATION CONTACT: Emanuel Souza, Jr., (617) 565–3248.

SUPPLEMENTARY INFORMATION:

I. Background

Implementation of the provisions of the CAA, as amended in 1990, will require regulation of many small businesses so that areas may attain and maintain the national ambient air quality standards (NAAQS) and reduce the emission of air toxics. Small businesses frequently lack the technical expertise and financial resources necessary to evaluate such regulations and to determine the appropriate mechanisms for compliance. In

anticipation of the impact of these requirements on small businesses, the CAA requires that States adopt a PROGRAM, and submit this PROGRAM as a revision to the Federally approved SIP. In addition, the CAA directs the EPA to oversee these PROGRAMS and report to Congress on their implementation. The requirements for establishing a PROGRAM are set out in section 507 of title V of the CAA. In February 1992, EPA issued Guidelines for the Implementation of Section 507 of the 1990 Clean Air Act Amendments, in order to delineate the Federal and State roles in meeting the new statutory provisions and as a tool to provide further guidance to the States on submitting acceptable SIP revisions.

On January 12, 1994 (59 FR 1695), EPA published a notice of proposed rulemaking (NPR) for the Commonwealth of Massachusetts. The NPR proposed conditional approval of the State's PROGRAM. The formal SIP revision was submitted by Massachusetts on November 13, 1992 and July 22, 1993. A more detailed account of EPA's action can be found in the proposed rule.

In order to gain full approval, the State submittal must provide for each of the following PROGRAM elements: (1) The establishment of a small business assistance program (SBAP) to provide technical and compliance assistance to small businesses; (2) the establishment of a State small business ombudsman to represent the interests of small businesses in the regulatory process; and (3) the creation of a Compliance Advisory Panel (CAP) to determine and report on the overall effectiveness of the SBAP.

II. Summary of Submittal

EPA reviewed Massachusetts' PROGRAM and is conditionally approving it pursuant to section 110(k)(4) of the CAA. This approval is on the condition that Massachusetts meet its commitment to submit documentation to EPA by November 15, 1994 of adequate legal authority to establish and implement a compliance advisory panel incorporating all the elements listed in section 507(e) of the CAA. Additionally, the PROGRAM must be fully operational by November 15, 1994.

Other specific requirements of this SIP revision and the rationale for EPA's action are explained in the NPR and will not be restated here. One comment letter was received in support of EPA's approval of Massachusetts' PROGRAM.

Final Action

EPA is conditionally approving the SIP revision submitted by the DEP on November 13, 1992 and July 22, 1993 as a revision to the Massachusetts SIP. The State must submit to EPA by November 15, 1994 documentation of adequate legal authority which allows a compliance advisory panel to be established and implemented, incorporating all the elements listed in section 507(e) of the CAA; the PROGRAM must also be fully operational by that date. If the State fails to do so, this approval will become a disapproval on that date. EPA will notify the State by letter that this action has occurred. At that time, this commitment will no longer be a part of the approved Massachusetts SIP. EPA subsequently will publish a document in the **Federal Register** notifying the public that the conditional approval automatically converted to a disapproval. If the State meets its commitment, within the applicable time frame, the conditionally approved submission will remain a part of the SIP until EPA takes final action approving or disapproving the new legislative authority. If EPA disapproves the new submittal, the conditionally approved small business program will also be disapproved at that time. If EPA approves the submittal, the small business program will be fully approved in its entirety and replace the conditionally approved program in the SIP.

If the conditional approval is converted to a disapproval, such action will trigger EPA's authority to impose sanctions under section 110(m) of the CAA at the time EPA issues the final disapproval or on the date the State fails to meet its commitment. In the latter case, EPA will notify the State by letter that the conditional approval has been converted to a disapproval and that EPA's sanctions authority has been triggered. In addition, the final disapproval triggers the federal implementation plan (FIP) requirement under section 110(c). Pursuant to section 507(b)(3), EPA will provide for implementation of the program provisions required under section 507(a)(4) in any State that fails to submit such a program under that subsection. Therefore, EPA would have to provide for a compliance assistance program which assists small business stationary sources in determining applicable requirements and in receiving permits under the CAA.

Conditional approvals of SIP submittals under section 110 and subchapter I, part D of the CAA do not create any new requirements, but simply approve requirements that the State is already imposing. Therefore, because the federal SIP-approval does not impose any new requirements, I certify that it does not have a significant impact on any small entities affected.

Moreover, due to the nature of the federal-state relationship under the CAA, preparation of a regulatory flexibility analysis would constitute federal inquiry into the economic reasonableness of state action. The CAA forbids EPA to base its actions concerning SIPs on such grounds. *Union Electric Co.* v. *U.S. E.P.A.*, 427 U.S. 246, 256–66 (S.Ct. 1976); 42 U.S.C. 7410(a)(2).

If the conditional approval is converted to a disapproval under section 110(k), based on the State's failure to meet the commitment, it will not affect any existing state requirements applicable to small entities. Federal disapproval of the state submittal does not affect its state-enforceability. Moreover, EPA's disapproval of the submittal does not impose a new federal requirement. Therefore, EPA certifies that this disapproval action does not have a significant impact on a substantial number of small entities because it does not remove existing state requirements nor does it substitute a new federal requirement.

Under the Regulatory Flexibility Act, 5 U.S.C. 600 et seq., EPA must prepare a regulatory flexibility analysis assessing the impact of any proposed or final rule on small entities. 5 U.S.C. 603 and 604. Alternatively, EPA may certify that the rule will not have a significant impact on a substantial number of small entities. Small entities include small businesses, small not-for-profit enterprises, and government entities with jurisdiction over populations of less than 50,000.

The Office of Management and Budget has exempted this action from Executive Order 12866 Review.

Nothing in this action should be construed as permitting or allowing or establishing a precedent for any future request for revision to any State implementation plan. Each request for revision to the State implementation plan shall be considered separately in light of specific technical, economic, and environmental factors and in relation to relevant statutory and regulatory requirements.

Under section 307(b)(1) of the Clean Air Act, petitions for judicial review of this action must be filed in the United States Court of Appeals for the appropriate circuit by October 14, 1994. Filing a petition for reconsideration by

the Administrator of this final rule does not affect the finality of this rule for the purposes of judicial review nor does it extend the time within which a petition for judicial review may be filed, and shall not postpone the effectiveness of such rule or action. This action may not be challenged later in proceedings to enforce its requirements. (See section 307(b)(2).)

List of Subjects in 40 CFR Part 52

Environmental protection, Air pollution control, Incorporation by reference, Intergovernmental relations, Small business assistance program.

Note: Incorporation by reference of the State Implementation Plan for the State of Massachusetts was approved by the Director of the Federal Register on July 1, 1982.

Dated: June 17, 1994.

John P. DeVillars,

Regional Administrator, Region I.

Part 52 of chapter I, title 40 of the Code of Federal Regulations is amended as follows:

PART 52—[AMENDED]

1. The authority citation for part 52 continues to read as follows:

Authority: 42 U.S.C. 7401–7671q.

Subpart W—Massachusetts

2. Section 52.1119 is added to subpart W to read as follows:

§ 52.1119 Identification of plan—conditional approval.

(a) The following plan revisions were submitted on the dates specified.

(1) On November 13, 1992, the Massachusetts Department of Environmental Protection submitted a small business stationary source technical and environmental compliance assistance program (PROGRAM). On July 22, 1993, Massachusetts submitted a letter clarifying portions of the November 13, 1992 submittal. In these submissions, the State commits to submit adequate legal authority to establish and implement a compliance advisory panel and to have a fully operational PROGRAM by November 15, 1994.

(i) Incorporation by reference.

(A) Letter from the Massachusetts Department of Environmental Protection dated November 13, 1992 submitting a revision to the Massachusetts State Implementation Plan.

(B) State Implementation Plan Revision for a Small Business Technical and Environmental Compliance Assistance Program dated November 13, 1992.

(ii) Additional materials.

(A) Letter from the Massachusetts Department of Environmental Protection dated July 22, 1993 clarifying portions of Massachusetts' November 13, 1992 SIP revision.

[FR Doc. 94–19846 Filed 8–12–94; 8:45 am]

BILLING CODE 6560–50–M

---

40 CFR Part 52

[NC–057–1–6412b; FRL–5004–8]

Approval and Promulgation of Implementation Plans: Approval of Revisions to the North Carolina State Implementation Plan

AGENCY: Environmental Protection Agency (EPA).

ACTION: Final rule.

SUMMARY: EPA is approving revisions submitted on March 3, 1993, by the State of North Carolina, through the North Carolina Department of Environment, Health and Natural Resources. These revisions corrected names and addresses, corrected cross-references, added a reference to the **Federal Register** document containing the nitrogen dioxide (NO_2) increments, and clarified the visible emissions and ambient standards regulations.

DATES: This final rule will be effective October 14, 1994 unless adverse or critical comments are received by September 14, 1994. If the effective date is delayed, timely notice will be published in the **Federal Register**.

ADDRESSES: Written comments should be addressed to:

Carol L. Kemker, Regulatory Planning and Development Section, Air Programs Branch, Air, Pesticides & Toxics Management Division, Region IV Environmental Protection Agency, 345 Courtland Street, NE., Atlanta, Georgia 30365.

Copies of the material submitted by the NCDEHNR may be examined during normal business hours at the following locations:

Air and Radiation Docket and Information Center (Air Docket 6102), U.S. Environmental Protection Agency, 401 M Street, SW., Washington, DC 20460.

Environmental Protection Agency, Region IV Air Programs Branch, 345 Courtland Street, NE., Atlanta, Georgia 30365.

North Carolina Department of Environment, Health and Natural Resources, 512 North Salisbury Street, Raleigh, North Carolina 27604.

FOR FURTHER INFORMATION CONTACT: Carol L. Kemker, Regulatory Planning and Development Section, Air Programs Branch, Air, Pesticides & Toxics Management Division, Region IV Environmental Protection Agency, 345 Courtland Street, NE., Atlanta, Georgia 30365. The telephone number is 404–347–2864.

SUPPLEMENTARY INFORMATION: On March 3, 1993, the State of North Carolina, through the North Carolina Department of Environment, Health and Natural Resources, submitted revisions to the North Carolina State Implementation Plan (SIP). A brief description of each revision follows.

15 NCAC 2D .0103 Copies of Referenced Federal Regulations

North Carolina amended this rule to change the address of the Wilmington Regional Office and to make grammatical changes.

15 NCAC 2D .0104 Incorporation by Reference

North Carolina amended this rule to clarify that documents incorporated by reference in the CFR automatically include any future updates or amendments unless another rule specifies otherwise.

15 NCAC 2D .0401 Purpose

North Carolina amended this rule to clarify that no facility or source of air pollution shall cause or contribute to a violation of any ambient air quality standard. The rule as previously written appeared to apply only to each emission point and not to the whole plant site.

15 NCAC 2D .0521 Control of Visible Emissions

North Carolina amended this regulation to replace the term "installation" with the term "source" or "owner or operator of the source." The term "installation" was not defined and the terms "source" or "owner or operator of the source" are defined.

15 NCAC 2D .0530 Prevention of Significant Deterioration

North Carolina amended this rule to reference the **Federal Register** containing the nitrogen dioxide (NO_2) increment requirements. This rule is also amended to specify that the version of the CFR incorporated in the rule is that of January 1, 1989, and does not include any subsequent amendments.

15 NCAC 2D .0531 Sources in Nonattainment Areas

North Carolina amended this rule to specify that the version of the referenced CFR is that of January 1, 1989, and does not include any subsequent amendments.

15 NCAC 2D .0532 Sources Contributing to an Ambient Violation

North Carolina amended this rule to correct a cross-reference. This rule is also amended to specify that the version of the referenced CFR is that of January 1, 1989, and does not include any subsequent amendments.

15 NCAC 2H .0603 Application

North Carolina amended this rule to correct the mailing address of the Division of Environmental Management.

15 NCAC 2H .0609, Permit Fees

North Carolina amended this rule to correct the Department name.

Final Action

In this document, EPA is approving the revisions to the North Carolina Environmental Management regulations listed above. This action is being taken without prior proposal because the changes are noncontroversial and EPA anticipates no significant comments on them. The public should be advised that this action will be effective on October 14, 1994. However, if adverse or critical comments are received by September 14, 1994, this action will be withdrawn and two subsequent documents will be published before the effective date. One document will withdraw the final action. The second document will finalize the action and address the comments.

Under section 307(b)(1) of the Clean Air Act, 42 U.S.C. 7607 (b)(1), petitions for judicial review of this action must be filed in the United States Court of Appeals for the appropriate circuit by October 14, 1994. Filing a petition for reconsideration by the Administrator of this final rule does not affect the finality of this rule for purposes of judicial review nor does it extend the time within which a petition for judicial review may be filed, and shall not postpone the effectiveness of such rule or action. This action may not be challenged later in proceedings to enforce its requirements. (See section 307(b)(2) of the Act, 42 U.S.C. 7607 (b)(2)).

This action has been classified as a Table 3 action by the Regional Administrator under the procedures published in the **Federal Register** on January 19, 1989 (54 FR 2214–2225), as revised by an October 4, 1993, memorandum from Michael Shapiro, Acting Assistant Administrator for Air and Radiation. A future document will inform the general public of these tables. On January 6, 1989, the Office of Management and Budget (OMB) waived Table 2 and 3 SIP revisions from the requirements of section 3 of Executive Order 12291 for two years. The EPA has submitted a request for a permanent waiver for Table 2 and Table 3 SIP revisions. The OMB has agreed to continue the waiver until such time as it rules on USEPA's request. This request continues in effect under Executive Order 12866 which superseded Executive Order 12291 on September 30, 1993.

Nothing in this action shall be construed as permitting or allowing or establishing a precedent for any future request for a revision to any SIP. Each request for revision to the SIP shall be considered separately in light of specific technical, economic, and environmental factors and in relation to relevant statutory and regulatory requirements.

Under the Regulatory Flexibility Act, 5 U.S.C. 600 *et seq.*, EPA must prepare a regulatory flexibility analysis assessing the impact of any proposed or final rule on small entities. 5 U.S.C. 603 and 604. Alternatively, EPA may certify that the rule will not have a significant impact on a substantial number of small entities. Small entities include small businesses, small not-for-profit enterprises, and government entities with jurisdiction over populations of less than 50,000.

SIP approvals under section 110 and subchapter I, part D of the CAA do not create any new requirements, but simply approve requirements that the State is already imposing. Therefore, because the Federal SIP-approval does not impose any new requirements, I certify that it does not have a significant impact on any small entities affected. Moreover, due to the nature of the Federal-state relationship under the CAA, preparation of a regulatory flexibility analysis would constitute Federal inquiry into the economic reasonableness of state action. The CAA forbids EPA to base its actions concerning SIPs on such grounds. *Union Electric Co.* v. *U.S. E.P.A.*, 427 U.S. 246, 256–66 (S.Ct. 1976); 42 U.S.C. 7410(a)(2).

List of Subjects in 40 CFR Part 52

Air pollution control, Incorporation by reference, Nitrogen dioxide, Reporting and recordkeeping requirements.

Dated: June 9, 1994.

Patrick M. Tobin,

Acting Regional Administrator.

Part 52, chapter I, title 40 of the Code of Federal Regulations is amended as follows:

PART 52—[AMENDED]

1. The authority citation for part 52 continues to read as follows:

Authority: 42.U.S.C. 7401–7671q.

Subpart II—North Carolina

2. Section 52.1770 is amended by adding paragraph (c)(71) to read as follows:

§ 52.1770 Identification of plan.

* * * * *

(c) * * *

(71) The PSD NOx increment regulations and other miscellaneous revisions to the North Carolina State Implementation Plan which were submitted on March 3, 1993.

(i) Incorporation by reference.

(A) North Carolina regulations 15 NCAC 2D.0103, 2D.0104, 2D.0401, 2D.0521, 2D.0530, 2D.0531, 2D.0532, 2H.0603, 2H.0607, and 2H.0609 effective on December 1, 1992.

(ii) Other material. None.

[FR Doc. 94–19843 Filed 8–12–94; 8:45 am]

BILLING CODE 6560–50–F

---

40 CFR Part 52

[WI39–02–6384; FRL–4894–2]

Approval and Promulgation of Implementation Plan; Wisconsin

AGENCY: United States Environmental Protection Agency (USEPA).

ACTION: Final rule.

SUMMARY: The USEPA is approving a revision to Wisconsin's State Implementation Plan (SIP) for ozone. On September 22, 1993, and January 14, 1994, the Wisconsin Department of Natural Resources (WDNR) submitted volatile organic compound (VOC) rules to the USEPA as a proposed revision to Wisconsin's ozone SIP. These rules replace the Chapter NR 154 (154 series) regulations currently contained in Wisconsin's federally approved ozone SIP with Chapter NR 400 (400 series) regulations which are consistent with the current Wisconsin Administrative Code. In addition to renumbering Wisconsin's VOC regulations, this revision addresses the following: the requirement of Wisconsin's March 9, 1984 SIP that the State submit major source non-control technology guideline (non-CTG) reasonably available control technology (RACT) regulations; the USEPA's SIP call of May 26, 1988; the requirement of the Clean Air Act as amended in 1990 (Act) that States correct deficient VOC RACT rules ("fix-up" requirement); and the requirement of the Act that States adopt VOC RACT rules where not previously required ("catch-up" requirement). Further, this revision redefines RACT for non-vapor

conveyorized degreasers, high performance architectural coatings, and fire truck and emergency response vehicle manufacturing.

EFFECTIVE DATE: This final rule is effective September 14, 1994.

ADDRESSES: Copies of the SIP revision request and the USEPA's analysis are available for inspection at the following location: (It is recommended that you telephone Kathleen D'Agostino at (312) 886–1767 before visiting the Region 5 office.)

United States Environmental Protection Agency, Region 5, Air and Radiation Division, 77 West Jackson Boulevard, Chicago, Illinois 60604.

FOR FURTHER INFORMATION CONTACT: Kathleen D'Agostino, Air Toxics and Radiation Branch (AT–18J), United States Environmental Protection Agency, Region 5, Chicago, Illinois 60604, (312) 886–1767.

SUPPLEMENTARY INFORMATION: On February 25, 1994 (59 FR 9158), the USEPA published a document proposing approval of revisions to the Wisconsin SIP for ozone which were submitted for parallel processing on September 22, 1993. On January 14, 1994, the State submitted final rules to replace the portions of the September 22, 1993, submittal which were not yet fully effective. Today the USEPA is taking final action to approve these revisions.

Background

On September 22, 1993, Wisconsin submitted VOC rules to the USEPA as a proposed revision to the State's ozone SIP. The proposed revision was submitted to the USEPA for parallel processing because portions of the rules had been adopted by the WDNR's Natural Resources Board, but were not as yet fully effective at the State level. On January 14, 1994, the State submitted fully effective rules to complete the September 22, 1993, submittal.

These rules replace the 154 series regulations currently contained in Wisconsin's ozone SIP with 400 series regulations which are consistent with the current Wisconsin Administrative Code. More specifically, the September 22, 1993, submission consists of Chapters NR 400, 419 to 425 (excluding NR 419.07), 439 and 484, as related to VOCs. This includes Order AM–36–92, which contains VOC rule revisions adopted by the State of Wisconsin's Natural Resources Board on July 29, 1993. In addition to renumbering Wisconsin's VOC regulations, this revision fully addresses the following: the requirement of Wisconsin's March 9, 1984 SIP that the State submit major source non-CTG RACT regulations; the USEPA's SIP call of May 26, 1988; and the RACT fix-up requirement of section 182(a)(2)(A) of the Act. Additionally, this submittal expands the geographic coverage of Wisconsin's VOC RACT rules (where this has not already been done) to Door, Kewaunee, Manitowoc, and Washington Counties and lowers the applicability cutpoint for existing major non-CTG regulations to 25 tons per year (tpy) of VOC for sources located in the Milwaukee area.[1] In doing so, these rules partially address the RACT catch-up requirement of section 182(b)(2) of the Act. The catch-up requirement will be fully addressed when the Wisconsin submits its rules for major non-CTG sources, currently expected in 1994. Further, this revision redefines RACT for non-vapor conveyorized degreasers, high performance architectural coatings, and fire truck and emergency response vehicle manufacturing. A detailed discussion of the background for the above rules and nonattainment areas is provided in the notice of proposed rulemaking (NPR) cited above.

The USEPA has evaluated all of Wisconsin's rules, as submitted on September 22, 1993, and January 14, 1994, for consistency with the requirements of the Act, USEPA regulations and the USEPA's interpretation of these requirements as expressed in the various USEPA policy documents referenced in the NPR. The USEPA has found that the rules meet the requirements applicable to ozone and is, therefore, approving the rules for incorporation into the State's ozone SIP.[2] A detailed discussion of the rule provisions and evaluations has been provided in the NPR and in technical support documents available at the USEPA's Region 5 office.

Public Comments

A 30-day public comment period was provided in the NPR. The USEPA received no comments on the proposed action.

USEPA Action

The USEPA is today approving the above-referenced rules into Wisconsin's ozone SIP as fully meeting the following: the requirement of Wisconsin's March 9, 1984 SIP that the State submit major source non-CTG RACT regulations; the USEPA's SIP call of May 26, 1988; and the RACT fix-up requirement of section 182(a)(2)(A) of the Act. Additionally, the USEPA is proposing to approve these rules as meeting part of the RACT catch-up requirements of section 182(b)(2) of the Act.

Regulatory Process

This action makes final the action proposed at 59 FR 9158. As noted elsewhere in this document, USEPA received no adverse public comment on the proposed action. As a direct result, the Regional Administrator has reclassified this action from Table 2 to a Table 3 under the processing procedures established at 54 FR 2214, January 19 1989.

Under the Regulatory Flexibility Act, 5 U.S.C. 600 *et seq.*, the USEPA must prepare a regulatory flexibility analysis assessing the impact of any proposed or final rule on small entities. 5 U.S.C. 603 and 604. Alternatively, the USEPA may certify that the rule will not have a significant impact on a substantial number of small entities. Small entities include small businesses, small not-for-profit enterprises, and government entities with jurisdiction over populations of less than 50,000.

State Implementation Plan approvals under section 110 and subchapter I, part D, of the Act do not create any new requirements, but simply approve requirements that the State is already imposing. Therefore, because the Federal SIP approval does not impose any new requirements, I certify that it does not have a significant impact on any small entities affected. Moreover, due to the nature of the Federal-state relationship under the Act, preparation of a regulatory flexibility analysis would constitute Federal inquiry into the economic reasonableness of state action. The Act forbids the USEPA to base its actions concerning SIPs on such grounds. *Union Electric Co. v. U.S. EPA*, 427 U.S. 256–66 (1976).

Under section 307(b)(1) of the Act, petitions for judicial review of this action must be filed in the United States Court of Appeals for the appropriate circuit by October 14, 1994. Filing a petition for reconsideration by the Administrator of this final rule does not affect the finality of this rule for the purposes of judicial review nor does it extend the time within which a petition for judicial review may be filed, and shall not postpone the effectiveness of such rule or action. This action may not be challenged later in proceedings to

[1] Under the 1990 amendments, major sources in severe areas are defined as those with the potential to emit 25 tpy or more of VOCs. This revision ensures that the definition of major source contained in the amendments is reflected in existing major non-CTG regulations.

[2] The USEPA is approving rules NR 421.03, NR 421.04, NR 422.09, NR 422.155 into the SIP for their strengthening effect, but not as meeting RACT.

enforce its requirements (see section 307(b)(2)).

List of Subjects in 40 CFR Part 52

Air pollution control, Environmental protection, Hydrocarbons, Incorporation by reference, Intergovernmental relations, Ozone, Reporting and recordkeeping requirements.

Dated: May 11, 1994.

Michelle D. Jordan,

Acting Regional Administrator.

40 CFR part 52, Subpart YY, is amended as follows:

PART 52—[AMENDED]

1. The authority citation for part 52 continues to read as follows:

Authority: 42 U.S.C. 7401–7671q.

Subpart YY—Wisconsin

2. Section 52.2570 is amended by adding paragraph (c)(73) to read as follows:

§52.2570 Identification of plan.

* * * * *

(c) * * *

(73) Revisions to the ozone State Implementation Plan (SIP) were submitted by the Wisconsin Department of Natural Resources on September 22, 1993, and January 14, 1994. These rules replace the 154 series stationary source VOC regulations previously contained in Wisconsin's ozone SIP with 400 series regulations which are consistent with the current Wisconsin Administrative Code. These rules are only being approved as they apply to the ozone SIP.

(i) Incorporation by reference. The following chapters of the Wisconsin Administrative Code are incorporated by reference.

(A) Chapter NR 400: Air Pollution Control Definitions.

(B) Chapter NR 419: Control of Organic Compound Emissions, except for NR 419.07.

(C) Chapter NR 420: Control of Organic Compound Emissions from Petroleum and Gasoline Sources.

(D) Chapter NR 421: Control of Organic Compound Emissions from Chemical, Coatings and Rubber Products Manufacturing.

(E) Chapter NR 422: Control of Organic Compound Emissions from Surface Coating, Printing and Asphalt Surfacing Operations.

(F) Chapter NR 423: Control of Organic Compound Emissions from Solvent Cleaning Operations.

(G) Chapter NR 424: Control of Organic Compound Emissions from Process Lines.

(H) Chapter NR 425: Compliance Schedules, Exceptions, Registration and Deferrals for Organic Compound Emission Sources in CHS. NR 419 to 424.

(I) Chapter NR 439: Reporting, Recordkeeping, Testing, Inspection and Determination of Compliance Requirements.

(J) Chapter NR 484: Incorporation by Reference.

[FR Doc. 94–19842 Filed 8–12–94; 8:45 am]

BILLING CODE 6560–50–P

FEDERAL COMMUNICATIONS COMMISSION

47 CFR Part 73

[MM Docket No. 89–128, RM–6655, RM–6996]

Radio Broadcasting Services; Dublin and Marlin, TX

AGENCY: Federal Communications Commission.

ACTION: Final rule.

SUMMARY: This document rescinds the allotment of Channel 225C3 at Dublin, Texas, and allots Channel 226C3 instead. This document also allots Channel 225C2 to Marlin in lieu of Channel 225A and modifies the license of Station KEYR to specify operation on Channel 225C2, Marlin, Texas. The allotment of channel 226C3 to Dublin, Texas, will provide that community with its first aural transmission service. Channel 226C3 can be allotted to Dublin in compliance with the Commission's minimum distance separation requirements of the Rules, with a site restriction of 22.4 kilometers (13.9 miles northwest of the community. The coordinates for Channel 226C3 at Dublin are 32–15–21 and 98–28–09. Channel 225C2 can be allotted to Marlin in compliance with the Commission's minimum distance separation requirements at coordinates of 31–22–48 and 97–09–42. With this action, this proceeding is terminated.

EFFECTIVE DATE: Sept. 26, 1994.

FOR FURTHER INFORMATION CONTACT: Arthur D. Scrutchins, Mass media Bureau, (202) 634–6530.

SUPPLEMENTARY INFORMATION: This is a synopsis of the Commission's Memorandum Opinion and Order, MM Docket No. 89–128, adopted August 3, 1994, and released Aug. 10, 1994. The full text of this Commission decision is available for inspection and copying during normal business hours in the FCC Reference Center (Room 239), 1919 M Street, NW, Washington, D.C. The complete text of this decision may also be purchased from the Commission's copy contractors, International Transcription Service, Inc., (202) 857–3800, 1919 M Street, N.W., Room 246, or 2100 M Street, N.W., Suite 140, Washington, D.C. 20037.

List of Subjects in 47 CFR Part 73

Radio broadcasting.

Part 73 of Title 47 of the Code of Federal Regulations is amended as follows:

PART 73—[AMENDED]

1. The authority citation for Part 73 continues to read as follows:

Authority: 47 U.S.C. 154, 303.

§ 73.202 [Amended]

2. Section 73.202(b), the Table of FM Allotments under Texas, is amended by removing Channel 225C3 at Dublin and adding Channel 226C3 at Dublin and by removing Channel 225A at Marlin and adding Channel 225C2 at Marlin.

Federal Communications Commission.

Douglas W. Webbink,

Chief, Policy and Rules Division, Mass Media Bureau.

[FR Doc. 94–19863 Filed 8–12–94; 8:45 am]

BILLING CODE 6712–01–M

DEPARTMENT OF THE INTERIOR

Fish and Wildlife Service

50 CFR Part 14

RIN 1018–AB61

Live Farm-Raised Fish; Exemption From Fish and Wildlife Export Requirements Except for Marking Requirements

AGENCY: Fish and Wildlife Service, Interior.

ACTION: Final rule.

SUMMARY: The Service exempts live farm-raised fish and farm-raised fish eggs from Service export requirements except for marking requirements. This action exempts exporters of live farm-raised fish and farm-raised fish eggs from import/export license requirements, designated port requirements and payment of user fees.

EFFECTIVE DATE: This rule is effective on August 15, 1994.

FOR FURTHER INFORMATION CONTACT: Frank S. Shoemaker, Special Agent in Charge, Investigations, Division of Law Enforcement, Fish and Wildlife Service, U.S. Department of the Interior, Washington, D.C. 20240. Telephone Number (703) 358–1949.

SUPPLEMENTARY INFORMATION:

Background

Only July 9, 1992, (57 FR 30459) the Service published a proposed rule exempting live farm-raised fish and farm-raised fish eggs from fish and wildlife export requirements except for marking requirements. Current regulations (50 CFR Sections 14.21, 14.55, 14.64 and 14.92) exempt shellfish and fisheries products imported or exported for human or animal consumption from Service import and export requirements. This exemption is based on language in the Endangered Species Act of 1973 (16 U.S.C. 1538) (Act) that authorizes the Secretary to prescribe necessary and appropriate regulations. This action does not relieve the Service of any responsibilities for the enforcement of provisions of the Convention on International Trade in Endangered Species of Wild Fauna and Flora (CITES). Any species of live farm-raised fish or fish eggs listed in Appendix I, II, or III, and expected from the United States would remain subject to all regulations governing such exports.

After reviewing inspection situations involving the import and export of live farm-raised fish and farm-raised fish eggs, the Secretary has determined that the interests of the Act and CITES are best served by concentrating the inspection efforts of the Service on those fish imports or exports which are endangered or threatened. Section 1538(d) requires anyone engaging in the business of importing or exporting fish or wildlife to obtain permission from the Secretary to do so. Under this final rule, exports of live farm-raised fish and farm-raised fish eggs which are not classified as endangered or threatened under the Act or are not listed under CITES, would be required to be marked according to contents, but would be otherwise permitted as exempted from Service export regulations. Exporters of live farm-raised fish and farm-raised fish eggs would not be required to obtain a license to export their live farm-raised fish and farm-raised fish eggs from the United States.

Under Section 1538(f), the Secretary may permit the importation or exportation of wildlife at non-designated ports and under such term as may be prescribed may permit both importation or exportation for other reasons, if in the Secretary's discretion, it is deemed appropriate and consistent with the Act. The Secretary views this exemption, as it pertains to live farm-raised fish and farm-raised fish eggs, as a means to concentrate Service enforcement efforts on species directly covered by the Act, including CITES. It also affords Service managers additional flexibility to direct wildlife inspection efforts where they are most needed. The costs to both the Service and fish farmers for export inspection of live farm-raised fish and farm-raised fish eggs that are non-endangered, non-threatened, non-CITES, and are raised for consumptive purposes (such as catfish) or ornamental purposes (such as guppies), outweigh any benefits that might be accrued by such inspection. Continued deployment of limited wildlife inspection services to the export of captive-bred live farm-raised fish and farm-raised fish eggs in an inefficient means of enforcing the Act when shipments of fish containing endangered, threatened, or CITES species needing inspection may be by-passed by Service personnel. Also, this action does not preclude the Service from conducting any inspection of a fish shipment where it is believed endangered, threatened or CITES species may occur, no does it relieve any exporter of live farm-raised fish or farm-raised fish eggs from meeting provisions of the Act, CITIES or any other regulations or directive issued by the Service.

Since June 11, 1992, when Director's Order No. 48, Export of Live Farm-Raised Fish and Farm-Raised Fish Eggs was issued, the Service has determined that the exemption of live farm-raised fish and farm-raised fish eggs from Service export requirements has not significantly increased the risk that illegally taken wild fish are being exported as farm-raised. Nor have the effects of this order been detrimental to Service's fisheries management or law enforcement programs. However, concerns about the possible introduction of injurious species into this country's wild fisheries will require that the Service continue to enforce its regulations relating to the import of all fish and fish eggs.

Results of Written Comments

A total of 12 written comments were received by the Service during the comment period. Three expressed enforcement concerns, two related to the inclusion of shellfish in the rule change, one opposed the rule change, one requested information and five supported the rule change unconditionally.

Of the three comments regarding enforcement issues, the most specific concern was one relating to the illegal export of paddlefish eggs. The commenter was concerned that exempting live farm-raised fish and farm-raised fish eggs from license and export inspection requirements might exacerbate an existing problem regarding the illegal harvest of paddlefish eggs sold as caviar. "We * * * have no means (export documents or reports) to determine that the fish or fish eggs leaving the State are legally-taken wild fish or farm raised." The second enforcement commenter related concerns regarding the applicability of the exemption in a foreign country, determination of ultimate utilization of the product, the possible re-export of wild-caught tropical fish, limitations on the Service's ability to inspect due to the rule change, illegal exports of wild-caught illegally taken fish from Pacific territories, the mixing of wild-caught and captive-raised specimens, verification of captive-produced fish by hobbyists, and the question of shellfish raised in seeded beds as qualifying as bred-in-captivity. The commenter stated: "* * * unscrupulous tropical fish exporters could claim the exemption with only a few fish tanks in the basement." The commenter proposed not exempting live tropical aquarium fish, including live shellfish within the ruling, excluding re-exports and applying the exemption only to live products. The third enforcement commenter expressed concern about exports of live farm-raised fish containing other wildlife and that the rule change would provide "little deterrence to laundering wild-caught fish."

The Service is concerned about any potential impact of this rule on the wild fish resource and the ability of law enforcement agencies to protect the resource. The Service believes that the increased illegal take and export of wild-caught paddlefish is primarily an economic phenomenon resulting from the diminished supply of caviar exported from States formerly comprising the Soviet Union. The Service does not believe that this situation would be relieved by abandoning this rule.

A more effective means of addressing the problem of illegal take of paddlfish may lie in reviewing current regulatory approaches and enforcement strategies, developing more effective means of monitoring paddlefish resources and establishing closer liaison with the Service's Division of Law Enforcement in instances where Federal laws such as the Lacey Act apply.

Regarding the second set of enforcement concerns, it is true that the unscrupulous exporter of tropical fish can claim a bred-in-captivity status for any export of tropical fish. However, the Service has not relinquished any

importation inspection authority. Since nearly all tropical fish in the United States have either been captive-bred or imported, additional inspection at the time of export is duplicative and would render no benefit to the resource. Neither can the Service propose to define every category of exempt utilizations of live farm-raised fish. While it is true that Service export inspection options become somewhat more limited under this rule in instances where live farm-raised fish exports might contain illegal wildlife or even fish that are wild-caught, the Service cannot penalize or delay legitimate exports on unfounded suspicion. Nor can it penalize legitimate exporters of exotic or tropical fish because producers or hobbyists may be unregulated by States.

On June 11, 1992, Director's Order No. 48, Export of Live Farm-Raised Fish and Farm-Raised Fish Eggs was issued. This order expanded the exemption from import/export requirements of 50 CFR 14.21 (for shellfish and fisheries products imported or exported for human or animal consumption) to the export of live farm-raised fish and farm-raised fish eggs. Since the issuance of this directive, no significant increase in illegally taken wild fish re-exported as live farm-raised fish has been reported. Also, nothing in this rule prevents law enforcement authorities from enforcing existing laws regarding illegal importation or exportation or using existing law enforcement techniques in conducting investigations of commercial laundering of fish or other wildlife.

The Service recognizes that like other segments of the animal trade industry, certain individuals may not wish to invest in breeding operations with respect to wild-caught fish species currently imported and re-exported for sale. Such exports of wild-caught fish, if undeclared, remain illegal and are subject to investigation. The commenter also cited aquarium fish exported from the Pacific territories as a specific concern because the wild-caught population is "bound" to be caught by destructive means. Fish taken by such means may be laundered as captive-bred wildlife, speculated the commenter. As in the case of illegal paddlefish exportations, the Service believes this is a situation that must first be addressed by local authorities. Service inspection of shipments containing such illegally taken fish will diminish but not eliminate a root cause, which is the lack of internal controls at the territorial level. This commenter also stated that shellfish should be included in the Final Rule even if they do not meet the current definition of "bred in captivity" and "captivity" under 50 CFR Part 17.

In addition to better utilization of Service personnel resources and to more effectively enforce the Act, the Service is able through this action to address the economic needs of an important industry which farm raises fin fish and their eggs and to simplify the export of a product which is not taken from a wild resource under the jurisdiction of the Service. Under the provisions of 50 CFR 14.64(a), shellfish and fishery products for human or animal consumption are exempt from Service export declaration requirements. The Service recognizes that those who export shellfish specifically for purposes of human consumption frequently export these products in their immature forms, which complete their growth abroad before being sold for human consumption. Exporters of this class of shellfish are frequently required to meet wildlife export regulations because shellfish, such as clam "spat", are not directly consumed by animals or humans but are exported for transplantation prior to such consumption. The Service determined from the comments it received that this issue is of significant concern and that it is most appropriate to address this issue by reviewing the provisions of 50 CFR 14.21 in a forthcoming proposed rule which covers a broader range of importation and exportation procedures.

Another commenter was disconcerted because no supporting documentation for the Service's proposed actions regarding the lifting of inspection requirements of live farm-raised fish or farm-raised fish eggs exports was offered. (This concern was also raised as the sole comment in another letter.) The commenter concluded that this was because the Service's decision regarding the non-inspection of live farm-raised fish or farm-raised fish eggs exports was "biologically unsound" and ". . . that the export of live fish and fish eggs should be monitored more intensively rather than removing virtually all monitoring activity."

The commenter cited the Canadian Journal of Fisheries and Aquaculture Sciences, Volume 48 (Supplement No. 1), 1991, containing a series of papers on "The Ecological and Genetic Implications of Fish Introductions." The commenter also stated that the Service violated both the requirements of, and the spirit of E.O. 11987, by encouraging the export of species that would be exotic to receiving ecosystems.

The commenter cited instances of international fish disease introductions in Japan, Russia and several European countries. Such introductions, the commenter stated, amount to "* * * a solid scientific argument that the export of live fish and fish eggs should be monitored more intensely rather than removing virtually all monitoring activity." The commenter suggested that a user-fee program be set up so that live farm-raised fish and farm-raised fish eggs could be certified as pathogen and parasite free. Also, the commenter requested that a formal Environmental Impact Statement (EIS) be prepared on the proposed rule and stated that the exclusion of this rule from an EIS was a "perversion" of the National Environmental Policy Act (NEPA).

The Service recognizes that introductions can, and sometimes do, have the impacts cited by the commenter. The Service, like the commenter, recognizes that the accidental introduction of pathogens can and have caused serious problems for ecosystems. The history and results of accidental and damaging pathogen introductions are of concern to the Service. Consistent with the awareness of the problems such introductions may have, it is also important to consider that not all pathogens discovered in a new location have necessarily been new introductions. The limits of so-called natural, native range of bacterial pathogens is not entirely known. The commenter listed several diseases as examples of harmful pathogens having been introduced by fish from one ecosystem to another. One disease cited by the commenter as an introduced pathogen was Bacterial Kidney Disease. This disease is not now believed to have been an introduction caused by non-native fish but may well have been circumpolar in range long before it was identified. Also, another disease mentioned by the commenter, *Ichthyophthirius multifiliis*, is believed to have been a world wide pathogen before it too, was identified.

To assert that the vast majority of all pathogens are human introductions to a virgin ecosystem is to view solely one frame of a film of biological history while ignoring introductions occurring in previous frames of the same film. The Service must consider the fact that it has jurisdiction only with respect to U.S. fish resources. It cannot constrain legal trade to protect the resources of other nations from a presumptive belief that the export of farm-raised fish products damages foreign ecosystem. Also, the receiving ecosystems are normally fish farms, laboratories or even fish markets. This class of receiving ecosystems are low risk in terms of potential pathogen spread and most likely to be highly subject to government regulators abroad. The implicit assumption that exported

fish will be stocked in the wild is rarely the case.

The five letters comprising the balance of comments received were supportive of the Service's exempting live farm-raised fish and farm-raised fish eggs from export requirements except for marking. One representative of the aquaculture industry, while supportive, complained that the Service's definition of aquaculture was outdated because it did not encompass shellfish, aquatic plants and other farm-raised aquatic organisms. Another commenter representing some 340 members of a tropical fish farm association stated that this rule would enable tropical fish producers to gain a larger market share from foreign competitors. Another commenter stated that the Service's action in this rule making would have no adverse action on wild fishery resources but may have positive benefits to exporters of farm-raised fishery products in that State. The aquaculture development program manager of one State said that "export trade in these areas . . . could be grown substantially is regulatory constraints which impact profit margin are reduced or eliminated." The commissioner of Agriculture for another State explained that the removal of live farm-raised fish and farm-raised fish eggs from Service export requirements except for marking was of immeasurable benefit to an industry in which sales of the previous year totaled $32.8 million. The commenter stated that a major hindrance to the expansion of tropical fish exports has been lack of access to international airports with Service inspectors. The Service originally intended that this rule cover only live farm-raised fish and farm-raised fish eggs. Captive-raised amphibians mentioned by a commenter have not been considered. The intent of these regulatory changes is to reduce the regulatory burden and resulting negative economic impacts imposed on a farm industry or any industry that exports live farm-raised fish and farm-raised fish eggs, which are not removed from wild fish resources. The Service also believes it has the responsibility to provide the public with relief from regulations which are burdensome and do not serve their intended purpose. In this case, the Service has concluded that little if any benefit is accrued to endangered, threatened or CITES species or native species by continued treatment of exports of life farm-raised fish and farm-raised fish eggs as a wild resource.

Required Determinations

This final rule was not subject to Office of Management and Budget review under Executive Order 12866. This rule will not have a significant effect on a significant number of small entities under the Regulatory Flexibility Act (5 U.S.C. 601 *et seq.*). This action is not expected to have any significant takings implications, as per Executive Order 12630. This rule does not contain any information collection requirements which require approval by the Office of Management and Budget under the Paperwork Reduction Act (44 U.S.C. 3501 *et seq*). This action does not contain any federalism impacts as described in Executive Order 12612. The changes in the regulations in Part 14 are regulatory and enforcement actions which are covered by a categorical exclusion from National Environmental Policy Act procedures under Section 516 of the Departmental Manual and an Environmental Action Memorandum is on file at the U.S. Fish and Wildlife Service office in Arlington, Virginia. A determination has been made pursuant to Section 7 of the Endangered Species Act that the revision of Part 14 will not affect federally listed species.

Author

The primary author of this rule is Special Agent Marcia Cronan, Division of Law Enforcement, U.S. Fish and Wildlife Service, Washington, D.C.

List of Subjects in 50 CFR Part 14

Animal welfare, Exports, Fish, Imports, Labeling, Reporting and recordkeeping requirements, Transportation, Wildlife.

For the reasons set out in the preamble, Title 50, Chapter I, Subchapter B of the code of Federal Regulations, is amended as follows:

PART 14—IMPORTATION, EXPORTATION, AND TRANSPORTATION OF WILDLIFE

1. The authority citation for Part 14 continues to read as follows:

Authority: 16 U.S.C. 705, 712, 1382, 1538(d)-(f), 1540(f), 3371–3378, 4223–4244, and 4901–4916; 18 U.S.C. 42; 31 U.S.C. 483(a).

2. Section 14.3 is added to read as follows:

§ 14.3 Information collection requirements.

The information collection requirements contained within this Part 14 have been approved by the Office of Management and Budget under 44 U.S.C. 3507 and assigned a Clearance Number 1018–0012. This information is being collected to provide information about wildlife imports or exports, including products and parts, and will be used to facilitate enforcement of the Endangered Species Act of 1973 as amended (16 U.S.C. 1531 *et seq.*) and to carry out the provisions of the Convention on International Trade in Endangered Species of Wild Fauna and Flora. Public reporting burden for this form is estimated to vary from 10 to 15 minutes per response. Direct comments regarding the burden estimate or any other aspect of this form to the Service Information Collection Clearance Office, U.S. Department of the Interior, 1849 C Street, N.W., Washington, D.C. 20240, and the Interior Desk Officer, Office of Management and Budget, Washington, D.C. 20503.

3. Section 14.23 is added to read as follows:

§ 14.23 Live farm-raised fish and farm-raised fish eggs.

Live farm-raised fish and farm-raised fish eggs meet the definition of "bred in captivity" as stated in 50 CFR 17.3. Except for wildlife requiring a permit pursuant to Parts 17 or 23 of this subchapter, live farm-raised fish and farm-raised fish eggs may be exported from any U.S. Customs port.

4. Section 14.64 is amended by adding paragraph (c) to read as follows:

§ 14.64 Exceptions to export declaration requirements.

* * * * *

(c) Except for wildlife requiring a period pursuant to parts 17 or 23 of this subchapter, a Declaration for the Importation or Exportation of Fish or Wildlife (Form 3–177) does not have to be filed for the exportation of live farm-raised fish and farm-raised fish eggs as defined in § 14.23.

§ 14.92 [Amended]

5. Section 14.92(a)(2) is amended by removing the last word "and".

6. Section 14.92(a)(3) is amended by removing the period and adding in its place the word "and" preceded by a semicolon.

7. Section 14.92(a)(4) is added to read as follows:

§ 14.92 Exceptions to license requirement.

(a) * * *

* * * * *

(4) live farm-raised fish and farm-raised fish eggs of species not requiring a permit under Parts 17 or 23 of this subchapter B which are being exported.

* * * * *

Dated: June 10, 1994.

George T. Frampton, Jr.,

Assistant Secretary for Fish and Wildlife and Parks.

[FR Doc. 94–19672 Filed 8–12–94; 8:45 am]

BILLING CODE 4310–55–M

Proposed Rules

Federal Register
Vol. 59, No. 156
Monday, August 15, 1994

This section of the FEDERAL REGISTER contains notices to the public of the proposed issuance of rules and regulations. The purpose of these notices is to give interested persons an opportunity to participate in the rule making prior to the adoption of the final rules.

OFFICE OF PERSONNEL MANAGEMENT

5 CFR Parts 831 and 842

RIN 3206–AG10

Termination of Survivor Annuity Entitlement Based on Remarriage Before Age 55

AGENCY: Office of Personnel Management.

ACTION: Proposed rule.

SUMMARY: The Office of Personnel Management (OPM) is proposing regulations concerning survivor annuity entitlement under the Civil Service Retirement System and Federal Employees Retirement System. The regulations would facilitate qualification for a current spouse survivor annuity in certain cases involving a former spouse's remarriage to a retiree. The regulations would also limit the scope of the current regulations prohibiting reinstatement of a former spouse survivor annuity after an annulment. The regulations are necessary to implement the basic purpose of the statute.

DATES: Comments must be received on or before October 14, 1994.

ADDRESSES: Send comments to Reginald M. Jones, Jr., Assistant Director for Retirement Policy Development; Retirement and Insurance Group; Office of Personnel Management; P.O. Box 57; Washington, DC 20044; or deliver to OPM, Room 4351, 1900 E Street, NW., Washington, DC.

FOR FURTHER INFORMATION CONTACT: Harold L. Siegelman, (202) 606–0299.

SUPPLEMENTARY INFORMATION: Under sections 8341(h)(3)(B) and 8445(c)(2) of title 5, United States Code, a former spouse's survivor annuity entitlement terminates if the former spouse remarries before age 55. In a recent case, a retiree's former spouse was eligible for a survivor annuity, but she remarried the retiree before she reached age 55. They remarried to make sure the former spouse would get a survivor annuity. The retiree died 1 month after the remarriage without notifying OPM and the survivor reduction in the retiree's annuity continued until his death. The retiree, assuming the remarriage would assure his wife's future, died without having filed a written election to provide a survivor annuity for her. (See 5 U.S.C. 8339(j)(5)(B) and 8419(b)(2)(C). In our adjudication of this case, we decided to construe the statute so that the widow's pre-age 55 remarriage to the retiree under these circumstances does not disqualify her. To interpret the law to prevent her from receiving a survivor annuity would produce an unconscionable result that Congress never intended. Accordingly, we decided to issue regulations to adopt a more reasonable approach to this situation. Under these regulations, when a retiree remarries a former spouse who would be entitled, if not for the remarriage, to a former spouse survivor annuity based on the retiree's service, and the retiree takes no action to terminate the annuity reduction, we will deem the retiree to have elected to continue the reduction to provide a current spouse annuity under section 8339(j)(5)(B)(iii) or section 8419(b)(2)(C) of title 5, United States Code. We will deem the election to have occurred whether the former spouse's entitlement was based on the retiree's election or on a court order. Of course, an election would not be deemed if the retiree, in writing, asks OPM to stop the reduction either before or after the remarriage.

Also, with respect to remarriages of former spouses, the proposed regulations would clarify the scope of the current regulations concerning reinstatement of a former spouse survivor annuity entitlement after an annulment. Our current regulations provide that a former spouse's entitlement will not be reinstated even if it ended due to a remarriage that is later determined to be invalid and is annulled. This rule is based on the State's courts' treatment of remarriage for alimony purposes. Generally, the courts will not allow alimony to be reinstated when the remarriage is annulled because the payer of the alimony is allowed to rely on the act of remarriage (regardless of validity) to plan for the future without the alimony obligation. However, our alimony analogy is not appropriate when the former spouse's entitlement is not related to any reduction in the retiree's annuity. Section 4(b)(1)(B) and 4(b)(4) of the Civil Service Retirement Spouse Equity Act of 1984, as amended, provide survivor annuity benefits to former spouses who meet certain criteria, without requiring a reduction in a retiree's benefit. Accordingly, we are proposing to change section 831.644(d) of Title 5, Code of Federal Regulations, to allow reinstatement of entitlements based on section 4(b)(1)(B) and 4(b)(4) of the Civil Service Retirement Spouse Equity Act of 1984, as amended, if the remarriage before age 55 is later found to be invalid from its inception. We would not reinstate the former spouse's entitlement following an annulment in any situation in which a reduction in the employee annuity is required to provide the former spouse survivor annuity.

Regulatory Flexibility Act

I certify that this regulation will not have a significant economic impact on a substantial number of small entities because the regulation will only affect Federal agencies and retirement payments to retired Government employees, spouses, and former spouses.

List of Subjects in 5 CFR Parts 831 and 842

Administrative practice and procedure, Air traffic controllers, Claims, Disability benefits, Firefighters, Government employees, Income taxes, Intergovernmental relations, Law enforcement officers, Pensions, Reporting and recordkeeping requirements, Retirement.

U.S. Office of Personnel Management.

Lorraine A. Green,

Deputy Director.

Accordingly, OPM proposes to amend 5 CFR parts 831 and 842, as follows:

PART 831—RETIREMENT

1. The authority citation for part 831 continues to read in part as follows:

Authority: 5 U.S.C. 8347 * * *

Subpart F—Survivor Annuities

2. In section 831.644, paragraph (d) is revised to read as follows:

§ 831.644 Remarriage.

* * * * *

(d)(1) If present or future entitlement to a former spouse annuity is terminated because of remarriage before age 55, the entitlement will not be reinstated upon termination of the remarriage by death or divorce.

(2) If present or future entitlement to a former spouse annuity is terminated because of remarriage before age 55, the entitlement will not be reinstated upon annulment of the remarriage unless—

(i) The decree of annulment states that the marriage is without legal effect retroactively from the marriage's inception; and

(ii) The former spouse's entitlement is based on section 4(b)(1)(B) or section 4(b)(4) of Pub. L. 98–615.

(3) If a retiree who is receiving a reduced annuity to provide a former spouse annuity and who has remarried that former spouse (before the former spouse attained age 55) dies, the retiree will be deemed to have elected to continue the reduction to provide a current spouse annuity unless the retiree requests (or has requested) in writing that OPM terminate the reduction.

PART 842—FEDERAL EMPLOYEES RETIREMENT SYSTEM—BASIC ANNUITY

3. The authority citation for part 842 continues to read as follows:

Authority: 5 U.S.C. 8461(g); §§ 842.104 and 842.106 also issued under 5 U.S.C. 8461(n); § 842.105 also issued under 5 U.S.C. 8402(c)(1) and 7701(b)(2); § 842.106 also issued under section 7202(m)(2) of the Omnibus Budget Reconciliation Act of 1990, Pub. L. 101–508 and 5 U.S.C. 8402(c)(1); §§ 842.604 and 842.611 also issued under 5 U.S.C. 8417; § 842.607 also issued under 5 U.S.C. 8416 and 8417; § 842.614 also issued under 5 U.S.C. 8419; § 842.615 also issued under 5 U.S.C. 8418; § 842.703 also issued under section 7001(a)(4) of the Omnibus Budget Reconciliation Act of 1990, Pub. L. 101–508; § 842.707 also issued under section 6001 of the Omnibus Budget Reconciliation Act of 1987, Pub. L. 100–203; § 842.708 also issued under section 4005 of the Omnibus Budget Reconciliation Act of 1989, Pub. L. 101–239 and section 7001 of the Omnibus Budget Reconciliation Act of 1990, Pub. L. 101–508; subpart H also issued under 5 U.S.C. 1104.

Subpart F—Survivor Elections

4. In section 842.612, paragraph (h) is added to read as follows:

§ 842.612 Post-retirement election of a fully reduced annuity or one-half reduced annuity to provide a current spouse annuity.

* * * * *

(h) If a retiree who is receiving a reduced annuity to provide a former spouse annuity and who has remarried that former spouse (before the former spouse attained age 55) dies, the retiree will be deemed to have elected to continue the reduction to provide a current spouse annuity unless the retiree requests (or has requested) in writing that OMP terminate the reduction.

[FR Doc. 94–19811 Filed 8–12–94; 8:45 am]
BILLING CODE 8825–01–M

DEPARTMENT OF AGRICULTURE

Agricultural Marketing Service

7 CFR Part 920

[Docket No. FV94–920–2PR]

Kiwifruit Grown in California; Revision of Pack and Reporting Requirements

AGENCY: Agricultural Marketing Service, USDA.

ACTION: Proposed rule.

SUMMARY: This proposed rule would revise pack and reporting requirements established under the Federal marketing order for kiwifruit grown in California. The first change would standardize packaging for certain volume filled containers packed by weight. For the 1994/95 season only, volume filled containers packed by weight would be required to be 22- or 23-pounds net weight if more than 10 pounds and less than 35 pounds. Thereafter, a 22-pound volume filled standard would be effective. The second change would streamline information collection requirements under the program by deleting a requirement that handlers file a Beginning Inventory Data form and adding reporting requirements for a Kiwifruit Inventory Shipment System (KISS) form. Since the KISS form is already in use by handlers, this requirement would merely formalize existing industry use of the KISS form.

DATES: Comments must be received by September 14, 1994.

ADDRESSES: Interested persons are invited to submit written comments concerning this rule. Comments must be submitted in triplicate to the Docket Clerk, Fruit and Vegetable Division, AMS, USDA, P.O. Box 96456, Room 2523–S, Washington, DC 20090–6456, or by facsimile at (202) 720–5698. Comments should reference the docket number and the date and page number of this issue of the **Federal Register** and will be made available for public inspection in the Office of the Docket Clerk during regular business hours.

FOR FURTHER INFORMATION CONTACT: Rose Aguayo, California Marketing Field Office, Marketing Order Administration Branch, Fruit and Vegetable Division, AMS, USDA, 2202 Monterey Street, Suite 102B, Fresno, California 93721; telephone (209) 487–5901; or Mark A. Hessel, Marketing Order Administration Branch, Fruit and Vegetable Division, AMS, USDA, P.O. Box 96456, Room 2526–S, Washington, DC 20090–6456, telephone (202) 720–5127.

SUPPLEMENTARY INFORMATION: This rule is proposed under Marketing Order No. 920 [7 CFR Part 920], as amended, regulating the handling of kiwifruit grown in California, hereinafter referred to as the "order". The order is effective under the Agricultural Marketing Agreement Act of 1937, as amended [7 U.S.C. 601–674], hereinafter referred to as the "Act."

The Department of Agriculture (Department) is issuing this rule in conformance with Executive Order 12866.

This proposed rule has been reviewed under Executive Order 12778, Civil Justice Reform. It is not intended to have retroactive effect. This proposed rule will not preempt any state or local laws, regulations, or policies, unless they present an irreconcilable conflict with this rule.

The Act provides that administrative proceedings must be exhausted before parties may file suit in court. Under section 608c(15)(A) of the Act, any handler subject to an order may file with the Secretary a petition stating that the order, any provision of the order, or any obligation imposed in connection with the order is not in accordance with law and request a modification of the order or to be exempted therefrom. A handler is afforded the opportunity for a hearing on the petition. After the hearing the Secretary would rule on the petition. The Act provides that the district court of the United States in any district in which the handler is an inhabitant, or has his or her principle place of business, has jurisdiction in equity to review the Secretary's ruling on the petition, provided a bill in equity is filed not later than 20 days after the date of the entry of the ruling.

Pursuant to requirements set forth in the Regulatory Flexibility Act (RFA), the Administrator of the Agricultural Marketing Service (AMS) has considered the economic impact of this rule on small entities.

The purpose of the RFA is to fit regulatory actions to the scale of business subject to such actions in order that small businesses will not be unduly or disproportionately burdened.

Marketing orders issued pursuant to the Act, and rules issued thereunder, are unique in that they are brought about through group action of essentially small entities acting on their own behalf. Thus, both statutes have small entity orientation and compatibility.

There are approximately 65 handlers of California kiwifruit subject to regulation under the order and approximately 600 kiwifruit producers in the production area. Small agricultural service firms are defined by the Small Business Administration [13 CFR 121.601] as those whose annual receipts are less than $5,000,000, and small agricultural producers have been defined as those having annual receipts of less than $500,000. A majority of handlers and producers of California kiwifruit may be classified as small entities.

Under the terms of the order, fresh market shipments of California kiwifruit are required to be inspected and are subject to grade, size, maturity, pack, and container requirements.

The Kiwifruit Administrative Committee (committee), the agency responsible for local administration of the order, met on February 10, 1994, and unanimously recommended the following changes:

Pack Requirements

The committee recommended standardizing the weight of certain volume filled containers by requiring such containers to be marked by weight at either 22-pounds or 23-pounds net weight through July 31, 1995. For subsequent seasons, volume filled containers would be standardized at 22 pounds. Paragraph (a)(3) of § 920.52 specifies that the Secretary may fix the weight of containers used in the handling of kiwifruit.

In a volume filled container, fairly uniform size kiwifruit are loosely packed without cell compartments, cardboard fillers or molded trays. Handlers may ship volume filled containers marked by either the appropriate count or net weight of kiwifruit. Handler shipments are based upon the preference of the receiver. Volume filled containers marked by count would not be affected by this change. Also, containers of less than 10-pounds or more than 35-pounds net weight would not be affected by this revised weight standard. Thus the industry would continue to have the flexibility to utilize containers of different weights for a variety of buyer preferences.

Last season the industry standardized the weight of all volume filled containers of kiwifruit designated by weight at 23-pounds net weight of kiwifruit unless such containers hold less than 10-pounds or more than 35-pounds net weight of kiwifruit. The industry has since learned that the recognized world standard for volume filled containers of kiwifruit is 10-kilograms (10-kg) net weight which is equal to approximately 22 pounds. The industry has also become aware that neither foreign nor domestic buyers wish to pay more for a 23-pound box than for a 22-pound (10-kg) box. As a result, California marketers selling 23-pound containers have been disadvantaged in both export and domestic markets compared to marketers from other countries selling 22-pound (10-kg) containers of fruit.

The change to a standard container weight of 22-pounds net weight would enable the industry to mark volume filled containers both in terms of a unit of measure in pounds and with a metric weight. Standardizing the weight of volume filled containers marked by weights recognized in the world market would standardize marketing practices for the kiwifruit industry.

The committee considered immediately standardizing the minimum weight for volume filled containers at only 22 pounds (10 kg) rather than at 22 pounds or 23 pounds. However, all committee members were in favor of allowing handlers to continue to also pack or ship to the 23-pound standard for the 1994/95 season to enable handlers to utilize existing inventories of boxes and labels. Thus the requirement to ship only 22-pound net weight containers would be effective for the 1995–96 and subsequent seasons.

This proposed rule would impact all handlers in the same manner. The same size container currently used for the 23-pound standard can be used for the 22-pound (10-kg) standard. It is anticipated that only a small number of packages would be shipped in 23-pound containers during the 1994/95 season if this proposal is implemented. This is because handlers shipping 23-pound containers have already expressed the concern that they do not receive a price premium for the extra pound of fruit in each container. This concern could be remedied by deleting the preprinted marking of 23 pounds, relabeling the container to read 22 pounds, and filling the container with 22 pounds of fruit. This change would impose some minimal costs on those handlers who choose to print new labels or convert 23-pound volume filled containers into other types of containers. However, the overall benefits to the California kiwifruit industry by standardizing volume filled containers at 22 pounds (10 kg), with the option of using existing labels and boxes for the 1994/95 season, would more than offset the costs imposed on handlers.

Reporting Requirements

Paragraphs (a) and (b) of § 920.60 authorize reporting requirements for kiwifruit handlers under the marketing order. Pursuant to § 920.160, the marketing order requires a Beginning Inventory Data form to be filed with the committee by each handler no later than five days after all fruit has been packed for the season, or such other later time as the committee may establish. This information includes beginning inventory by container type and by fruit size.

In 1990, the California Kiwifruit Commission, hereinafter referred to as the "State commission," adopted the Kiwifruit Inventory Shipment System (KISS) form. The KISS form is comprised of three sections: (1) The "KISS/Add Inventory" requires all handlers to report their beginning inventories by size and container type. Inventory includes all fruit packed at harvest. (2) The "KISS/Deduct Inventory" requires all handlers to report fruit lost in repack, fruit repacked into another container type, and adjustments to decrease posted inventory. (3) The "KISS/Shipments" requires all handlers to report shipments by size and container type.

All three sections of the KISS form would be filed with the committee, on or before December 5th, or such other later time as the committee may establish. Subsequent KISS forms, including all three sections, would be filed with the committee by the fifth day and again by the twentieth day of each calendar month, or such other later time as the committee may establish.

The adoption of the KISS form by the State commission resulted in redundant reporting requirements in the kiwifruit industry. The KISS form collects the same information as the Beginning Information Data form. This information is used to verify the total amount of fruit available for shipping, to calculate statistics, and to determine if assessments billed match reported shipments. In an effort to eliminate the redundant reporting requirements, the committee recommended that the Beginning Inventory Data form reporting requirement be deleted from paragraph (b) of § 920.160 and KISS form reporting requirements be added. This rule is intended to enable kiwifruit handlers to efficiently file one form to meet the requirements of both the State commission and the Federal marketing order. Deleting the requirement for the

Beginning Inventory Data form in paragraph (b) of § 920.160 and utilizing the KISS form would eliminate the submission of duplicate information.

Based on the above, the Administrator of the AMS has determined that this action would not have a significant economic impact on a substantial number of small entities.

In accordance with the Paperwork Reduction Act of 1980 [44 U.S.C. Chapter 35], the information collection requirements contained in this rule have been submitted to the Office of Management and Budget (OMB) for approval and have been assigned OMB No. 0581–0149. Eliminating the Beginning Inventory Data form will decrease the information collection burden for the industry by 65 hours. It has been estimated that it would take an average of .5 hours for each of the approximately 65 handlers of kiwifruit to complete the KISS form. Thus the proposed change would increase the overall burden by 325 hours because the KISS form is filed with the committee more frequently.

A 30-day comment period is provided to allow interested persons to respond to this proposal. All written comments timely received will be considered before a final determination is made on this matter.

List of Subjects in 7 CFR Part 920

Kiwifruit, Marketing agreements, Reporting and recordkeeping requirements.

For the reasons set forth in the preamble, it is proposed that 7 CFR Part 920 be amended as follows:

PART 920—KIWIFRUIT GROWN IN CALIFORNIA

1. The authority citation for 7 CFR Part 920 continues to read as follows:

Authority: 7 U.S.C. 601–674.

2. In § 920.302, paragraph (a)(4)(iv) is amended to read as follows:

§ 920.302 Grade, size, pack, and container regulations.

* * * * *

(a) * * *

(4) * * *

(iv) All volume filled containers of kiwifruit designated by weight shall hold 22-pounds (10-kilograms) net weight of kiwifruit unless such containers hold less than 10-pounds or more than 35-pounds net weight of kiwifruit. *Provided*, That for the season ending July 31, 1995, such containers may also hold 23-pounds net weight of kiwifruit.

* * * * *

3. In § 920.160, paragraph (b) is revised to read as follows:

§ 920.160 Reports

* * * * *

(b) *Kiwifruit Inventory Shipping System (KISS) form.*

Each handler shall file with the committee the initial Kiwifruit Inventory Shipment System (KISS) form, which consists of three sections "KISS/Add Inventory," "KISS/Deduct Inventory," and "KISS/Shipment," on or before December 5th, or such other later time as the committee may establish. Subsequent KISS forms, including all three sections, shall be filed with the committee by the fifth day and again by the twentieth day of each calendar month, or such other later time as the committee may establish, and will contain the following information:

(1) The beginning inventory of the handler by size and container type;

(2) The quantity of fruit the handler lost in repack and repacked into other container types;

(3) The total domestic and export shipments of the handler by size and container type; and

(4) Any other adjustments which increase or decrease posted handler inventory.

* * * * *

Dated: August 8, 1994.

Terry C. Long,

Acting Deputy Director, Fruit and Vegetable Division.

[FR Doc. 94–19892 Filed 8–12–94; 8:45 am]

BILLING CODE 3410–02–P

CONSUMER PRODUCT SAFETY COMMISSION

16 CFR Part 1203

Proposed Rule: Safety Standard for Bicycle Helmets

AGENCY: Consumer Product Safety Commission.

ACTION: Proposed rule.

SUMMARY: Pursuant to the Children's Bicycle Helmet Safety Act of 1994, the Commission is proposing a safety standard that would require bicycle helmets to meet impact-attenuation and other requirements. In addition to requirements derived from one or more of the voluntary standards applicable to this product, the proposed standard includes requirements specifically applicable to children's helmets and requirements to prevent helmets from coming off during an accident.

The Commission is also proposing testing and recordkeeping requirements so it can ensure that helmets subject to the standard meet its requirements.

DATES: Comments on the proposal should be submitted no later than October 31, 1994.

ADDRESSES: Comments should be mailed to the Office of the Secretary, Consumer Product Safety Commission, Washington, D.C. 20207, or delivered to the Office of the Secretary, Consumer Product Safety Commission, room 502, 4330 East-West Highway, Bethesda, Maryland 20814–4408, telephone (301) 504–0800.

FOR FURTHER INFORMATION CONTACT: Scott Heh, Project Manager, Directorate for Engineering Sciences, Consumer Product Safety Commission, Washington, D.C. 20207; telephone (301) 504–0494 ext. 1308.

SUPPLEMENTARY INFORMATION:

A. Background

The Commission estimates that, on average, one-half million bicycle-related injuries are treated annually in U.S. hospital emergency rooms. In addition, 1,000 fatalities occur each year, according to the National Safety Council. A 1993 Commission study of bicycle use and hazard patterns indicated that almost one-third of the injuries involved the head and that about 18 percent of bicyclists wear helmets.[1] Published data indicate that, in recent years, almost two-thirds of all bicycle-related deaths involved head injury.[2]

Younger children are at particular risk of head injury. The Commission's study showed that one-half of the injuries to children under the age of 10 involved the head, whereas the head was involved in only about one-fifth of the injuries to older children. Children were also less likely to have been wearing a helmet at the time of a bicycle-related incident than were adults. Research has shown that helmets may reduce the risk of head injury to bicyclists by about 85 percent, and the risk of brain injury by about 88 percent.[3]

On June 16, 1994, the Children's Bicycle Helmet Safety Act of 1994 (the

---

[1] Gregory B. Rodgers, Deborah K. Tinsworth, Curtis Polen, Suzanne Cassidy, Celestine M. Trainor, Scott R. Heh, Mary F. Donaldson, "Bicycle Use and Hazard Patterns in the United States," U.S. Consumer Product Safety Commission (June 1994).

[2] Jeffrey J. Sachs, MPH; Patricia Holmgreen, M.S.; Suzanne M. Smith, M.D.; and Daniel M. Sosin, M.D., "Bicycle-Associated Head Injuries and Deaths in the United States from 1984 through 1988," Journal of the American Medical Association 266 (December 1991): 3016–3018.

[3] Robert S. Thompson, M.D.; Frederic P. Rivara, M.D.; and Diane C. Thompson, M.S., "A Case Control Study of the Effectiveness of Bicycle Safety Helmets," The New England Journal of Medicine 320 (May 1989): 1361–1367.

"Act") was enacted. This Act provides that bicycle helmets manufactured more than 9 months from that date shall conform to any of the following interim safety standards: (1) The American National Standards Institute (ANSI) standard designated as Z90.4–1984, (2) the Snell Memorial Foundation standard designated as B–90, (3) the ASTM, formerly the American Society for Testing and Materials, standard designated as F 1447, or (4) any other standard that the Commission determines is appropriate. To date, the Commission has not determined that any standard other than the ones specifically mentioned in the Act is appropriate as an interim standard. The Act provides that failure to conform to an interim standard shall be considered a violation of a consumer product safety standard issued under the Consumer Product Safety Act (CPSA), 15 U.S.C. 2051–2084.

The Act also directs the Consumer Product Safety Commission to begin a proceeding under 5 U.S.C. 553 to:

1. review the requirements of the interim standards described above and establish a final standard based on such requirements,
2. include in the final standard a provision to protect against the risk of helmets coming off the heads of bicycle riders,
3. include in the final standard provisions that address the risk of injury to children, and
4. include additional provisions as appropriate.

The Act provides that the final standard shall take effect 1 year from the date it is issued and that the standard shall be considered to be a consumer product safety standard issued under the CPSA. However, the Act also provides that the provisions of the CPSA regarding rulemaking procedure, statutory findings, and judicial review (15 U.S.C. 2056, 2058, 2060, and 2079(d)) shall not apply to this proceeding or to the final standard. When the final standard becomes effective, it will replace the interim standards.

B. Proposed Regulation

The Commission has reviewed the bicycle helmet standards identified in the Act (ANSI, ASTM, and Snell, collectively referred to as the "current U.S. voluntary bicycle helmet standards"), as well as international bicycle helmet standards and draft revisions of the ANSI, ASTM, and Snell standards that are currently under consideration. Based on this review, the Commission has developed a proposed mandatory safety standard for bicycle helmets. When the final safety standard is issued, it will be codified as 16 CFR Part 1203.

The current U.S. voluntary bicycle helmet standards include requirements for general construction, labeling, peripheral vision, impact attenuation, and dynamic strength of the retention system. The requirements proposed for the mandatory standard in each of these categories, and additional provisions addressing the risk of helmets coming off the heads of bicycle riders and the risk of injury to children, are discussed below. The reasons for the major choices made by the Commission in creating the proposed rule are noted below. Additional reasons are stated in a Commission document, Proposed Safety Standard for Bicycle Helmets Authorized by the Children's Bicycle Helmet Safety Act of 1994, July 1994, Scott Heh, Project Manager (Tab B of Briefing Package).

General Construction

Section 1203.5 of the proposed mandatory standard includes provisions that address general construction characteristics of a bicycle helmet. Helmets shall be designed to reduce the acceleration forces imparted to the wearer's head by an impact and to remain on the wearer's head during impact. Helmets shall be constructed not to be harmful or potentially injurious to the wearer. For example, the helmet surface shall not have projections that may increase the likelihood of injury to the rider during an accident.

Construction materials shall be resistant to environmental conditions that may be reasonably expected during helmet use and storage and shall not be harmful to the wearer.

Labeling and Instructions

Section 1203.6 of the proposed mandatory standard requires certain labels on the helmet, which are consistent with all three U.S. voluntary standards. These labels provide the model designation and warnings regarding the protective limitations of the helmet. The labels also provide instructions regarding how to care for the helmet.

One labeling provision differs among the ANSI, ASTM, and Snell standards. ANSI requires the helmet to be labeled, "This helmet is designed only for bicycle use." Snell similarly requires the helmet to be labeled for bicycle use only. ASTM requires the label, "Not for Motor Vehicle Use." Many people seek head protection for recreational activities other than bicycling (e.g., roller skating). Helmets are not sold specifically for many non-bicycling activities, and a bicycle helmet often may be the best available means of head protection. In these cases, a person should not be discouraged from using a helmet by a label that states "For Bicycle Use Only." Therefore, the ASTM label, "Not for Motor Vehicle Use," is proposed for the mandatory standard. As discussed in Section H, below, the Commission will be considering the issue of multi-activity helmets during the comment period on this proposal.

The proposed mandatory standard also requires that helmets be accompanied by fitting and positioning instructions, including graphic representation of proper positioning. The proposed mandatory standard has performance criteria for the effectiveness of the retention system in keeping a helmet on the wearer's head. However, these criteria may not be effective if the helmet is not well matched to the wearer's head and carefully adjusted to obtain the best fit. Thus, the proposed mandatory standard contains the labeling requirement described above to help ensure that users will purchase the proper helmet and adjust it correctly.

To avoid damaging the helmet by contacting it with harmful common substances, the instructions must contain a list of any known common harmful substances and instructions to avoid contact between such substances and the helmet.

Peripheral Vision

Section 1203.14 of the proposed mandatory standard requires that a helmet shall allow a field of vision of 105 degrees to both the left and right of straight ahead. This requirement is consistent with the ANSI, ASTM, and Snell standards.

Impact Attenuation

The proposed standard measures the ability of the helmet to protect the head in a collision by securing the helmet on a headform and dropping the helmet/headform assembly from various heights onto a fixed steel anvil. ANSI and ASTM specify a 5-kg drop assembly mass for all headform sizes. The Snell drop assembly mass may vary from 5 to 6.5 kg. There have been discussions recently within the voluntary standards organizations about whether the drop assembly mass should change with headform size.

A proposal to scale the drop assembly mass from 3.1 kg for the ISO A headform (the smallest headform) to 6.1 kg for the ISO O headform (the largest headform) is being considered by the

ASTM Headgear Subcommittee. One issue that must be considered is that the reduced drop assembly mass for the smaller headform sizes precludes the use of impact test apparatus that is currently used in the U.S. This is because the test limits the mass of the support assembly to no more than 25 percent of the mass of the total drop assembly. Allowing the use of lighter headforms can reduce the total drop assembly weight to the point where the support assembly exceeds the 25 percent limit.

To permit the use of current test equipment, and to limit the possibility that lab-to-lab variability may occur if the drop mass is not tightly specified, a constant mass of 5 kg is proposed for the mandatory standard. However, the Commission requests comment regarding helmet safety benefits that may be achieved by specifying a different drop mass for each headform size.

Under the proposed standard, the helmet is tested with three types of anvils (flat, hemispherical, and "curbstone," as shown in Figures 10, 11 and 12 of the standard). These anvils represent types of surfaces that may be encountered in actual riding conditions. Instrumentation within the headform records the headform's impact in multiples of the acceleration due to gravity (g's). Impact tests are performed on different helmets, each of which has been conditioned in one of four environments that may be reasonably expected during helmet usage and storage. These environments are: ambient (room temperature), high temperature (a minimum of 117 °F), low temperature (a maximum of 9 °F), and immersion in water for 4–24 hours.

The ASTM impact test procedures and criteria are proposed for the mandatory standard (§§ 1203.12(d) and 1203.17). The ASTM test conditions are more severe than those specified by ANSI and are likely more representative of actual crash conditions than the Snell test procedures. Impacts are specified on a flat anvil from a height of 2 meters and on hemispherical and curbstone anvils from a height of 1.2 meters. Consistent with the requirements of the ANSI, Snell, and ASTM standards, the peak acceleration of any impact shall not exceed 300 g. In addition, maximum time limits of 6 ms and 3 ms are specified for the duration of the impact at the 200-g and 150-g levels. Thus, the proposed standard addresses both the risk of injury presented by an "instantaneous" peak impact and the risk of injury presented if the head is subjected to lower level impacts for an excessive length of time.

One deviation from the ANSI, ASTM, and Snell standards that is proposed for the mandatory standard is the designation for the area of the helmet that must provide impact protection. ANSI, ASTM, and Snell specify different extents of required head coverage and different procedures for designating the extent of protection. Comparison of the three standards shows that the greatest extent of protection can be achieved by combining the ANSI and ASTM procedures. ANSI requires more coverage than ASTM in some areas of the head, but less than ASTM in other areas. For example, while ASTM requires more coverage on the front of the head for all headform sizes, ANSI requires more coverage at the back of the head on the smaller headform sizes. The procedure for defining the extent of protection on a helmet is detailed at § 1203.11.

Dynamic Strength of the Retention System

The dynamic strength of the retention system test addresses the strength of the chin strap to ensure against breakage or excessive elongation of the strap that may contribute to a helmet coming off the head during an accident.

The ANSI, ASTM, and Snell standards have somewhat different test procedures and criteria for the dynamic strength of the retention system. Each of the three standards likely provides a suitable test of retention system strength. The ASTM specification is proposed for the mandatory standard (§ 1203.16) and offers the advantage of using the same dynamic impact specification that is used for the positional stability test.

The ASTM test requires that the chin strap remain intact and not elongate more than 30 mm (1.2 inches) when subjected to a "shock load" of a 4-kg (8.8-lb) weight falling a distance of 0.6 m (2 ft) onto a steel stop anvil (see Figure 8). This test is performed on three helmets after each is subjected to one of the different hot, cold, and wet environments.

Additional provisions not addressed in current U.S. voluntary bicycle helmet standards.

1. *Positional stability test (roll-off test).* Section 1203.15 of the proposed mandatory standard specifies a test procedure and requirement that are equivalent to those being considered by ASTM and Snell for future revisions to their standards. This procedure tests retention system effectiveness in preventing a helmet from "rolling off" a head. The procedure specifies a dynamic impact load of a 4-kg (8.8-lb) weight dropped from a height of 0.6 m (2 ft) to impact a steel stop anvil. This load is applied to the edge of a helmet that is placed on a headform on a support stand (See Figure 7). The helmet fails if it comes off the headform during the test.

2. *Extended area of protection for small children.* The proposed mandatory standard specifies an increased area of head coverage for small children that is not currently required in the U.S. voluntary standards. A study by Biokinetics & Associates Ltd. found differences in anthropometric characteristics between young children's heads and older children's and adult heads. This study led to an ASTM proposal to change the position of the basic plane (an anthropometric reference plane that includes the external ear openings and the bottom edges of the eye sockets) on the smallest test headform to be more representative of children ages 4 years and under. Section 1203.11(b) proposes a revised extent-of-protection requirement for helmets intended for children 4 years and under based on the adjusted basic plane.

C. Certification and Recordkeeping

Section 14(a) of the CPSA, 15 U.S.C. 2063(a), requires every manufacturer (including importers) and private labeler of a product that is subject to a consumer product safety standard to issue a certificate that the product conforms to the applicable standard, and to base that certificate either on a test of each product or on a "reasonable testing program." Subpart B of the proposed Safety Standard for Bicycle Helmets contains such certification requirements.

The proposed certification rule requires manufacturers of bicycle helmets that are manufactured 1 year after the issue date of the final standard to affix permanent labels to the helmets. These labels would be the "certificates" of compliance, as that term is used in § 14(a) of the CPSA and shall state "Complies with CPSC Safety Standard for Bicycle Helmets (16 CFR 1203)". Certification labels shall also provide the name and address of the manufacturer or importer, an identification of the production lot, and the month and year the product was manufactured. If the label on the bicycle helmet is not immediately visible to the ultimate purchaser of the helmet prior to purchase because of packaging or other marketing practices, a second label that states, "Complies with CPSC Safety Standard for Bicycle Helmets" must appear on the container or, if the container is not visible, on the

promotional material used in connection with the sale of the bicycle helmet.

The proposed certification rule requires manufacturers and importers to conduct a reasonable testing program to demonstrate that their bicycle helmets comply with the requirements of the standard. This reasonable testing program may be defined by the manufacturers, but must include either the tests prescribed in the standard or any other reasonable test procedures that assure compliance with the standard.

The proposed certification rule provides that the required testing program test bicycle helmets sampled from each production lot in such a manner that there is a reasonable assurance that, if the bicycle helmets selected for testing meet the standard, all bicycle helmets in the lot will meet the standard.

Bicycle helmet importers may rely in good faith on the foreign manufacturer's certificate of compliance, provided that a reasonable testing program has been performed by or for the foreign manufacturer; the importer is a U.S. resident, or has a resident agent in the U.S.; and the required test records are kept in the U.S.

In addition, a rule is proposed requiring that every person issuing certificates of compliance for bicycle helmets subject to the standard shall maintain written records which show that the certificates are based on a reasonable testing program. These records shall be maintained for a period of at least 3 years from the date of certification of the last bicycle helmet in each production lot and shall be available to any designated officer or employee of the Commission upon request in accordance with § 16(b) of the CPSA, 15 U.S.C. 2065(b).

D. Regulatory Flexibility Act Certification

When an agency undertakes a rulemaking proceeding, the Regulatory Flexibility Act, 5 U.S.C. 601 et seq., generally requires the agency to prepare proposed and final regulatory flexibility analyses describing the impact of the rule on small businesses and other small entities. The purpose of the Regulatory Flexibility Act, as stated in § 2(b) (5 U.S.C. 602 note), is to require agencies, consistent with their objectives, to fit the requirements of regulations to the scale of the businesses, organizations, and governmental jurisdictions subject to the regulations. Section 605 of the Act provides that an agency is not required to prepare a regulatory flexibility analysis if the head of an agency certifies that the rule will not have a significant economic impact on a substantial number of small entities.

The Commission's Directorate for Economics has prepared a preliminary economic assessment of the safety standard for bicycle helmets. Based on this assessment, any costs associated with design changes to comply with the proposed performance standard would be amortized over the course of production, and would be negligible on a per-unit basis. Costs associated with testing and monitoring are not expected to increase, since the vast majority of manufacturers now use third-party certification and will likely continue to use it in the future. To the extent that the repeated testing required by the testing program required by the proposed certification rule exceeds the amount of testing now conducted by some bicycle helmet manufacturers, the manufacturers could reduce per-test costs by performing the tests themselves, rather than using the third-party testing that is now performed.

The proposed labeling requirements are unlikely to have a significant impact on small firms, in that virtually all bicycle helmets now bear a permanent label on the inside surface. Industry sources report that, given sufficient lead time to modify these labels, any increased cost of labeling would be insignificant.

Accordingly, for the reasons given above, the Commission preliminarily concludes that the safety standard for bicycle helmets would not have any significant economic effect on a substantial number of small entities.

E. Environmental Considerations

Pursuant to the National Environmental Policy Act, and in accordance with the Council on Environmental Quality regulations and CPSC procedures for environmental review, the Commission has assessed the possible environmental effects associated with the proposed safety standard for bicycle helmets.

The Commission's regulations at 16 CFR 1021.5(c) (1) and (2) state that safety standards and product labeling or certification rules for consumer products normally have little or no potential for affecting the human environment. Preliminary analysis of the potential impact of this proposed rule indicates that the requirements of the standard are not expected to have a significant effect on the materials used in production or packaging, or in the amount of materials discarded due to the regulation. Therefore, no significant environmental effects are expected to result from the proposed rule. Because the proposed rule would have no adverse effect on the environment, neither an environmental assessment nor an environmental impact statement is required.

F. Multi-Activity Helmets

There is growing interest within the consumer safety community in promoting the development and use of helmets that will adequately protect the wearer not only while bicycling, but while participating in other nonmotorized recreational activities. The Commission solicits comments regarding the feasibility of developing a standard for multi-activity helmets. If such a helmet standard is feasible, the Commission will consider what requirements might be appropriate for inclusion in a mandatory standard, so that bicycle helmets, particularly those for children, may also be used effectively for other activities. Among the issues to be resolved are the appropriate age groups for multi-activity protection, which sports might reasonably be within the scope of multi-activity requirements, and the precise technical requirements that would be necessary. The CPSC will host a meeting, currently scheduled for 9:30 a.m., September 19, 1994, to discuss this topic. The meeting will be at the Commission's Bethesda, Maryland, offices at 4330 East-West Highway in Room 410.

List of Subjects in 16 CFR Part 1700

Consumer protection, Bicycles, Infants and children.

For the reasons given above, the Commission proposes to add a new part 1203 of Title 16 of the Code of Federal Regulations, to read as follows:

PART 1700—SAFETY STANDARD FOR BICYCLE HELMETS

* * * * *

PART 1203—SAFETY STANDARD FOR BICYCLE HELMETS

Subpart A—The Standard

Sec.

1203.1 Scope and effective date.
1203.2 Purpose.
1203.3 Referenced documents.
1203.4 definitions.
1203.5 Construction requirements.
1203.6 Labeling and instructions.
1203.7 Samples for testing.
1203.8 Conditioning environments.
1203.9 Test headforms.
1203.10 Selecting the test headform.
1203.11 Extent of impact protection—marking the test line.
1203.12 Test requirements.
1203.13 Test schedule.
1203.14 Peripheral vision test.

1203.15 Positional stability test (roll-off resistance).
1203.16 Dynamic strength of retention system test.
1203.17 Impact attenuation test.

Subpart B—Certification

1203.30 Purpose and scope.
1203.31 Effective date.
1203.32 Definitions.
1203.33 Certification testing.
1203.34 Product certification and labeling by manufacturers (including importers).

Subpart C—Recordkeeping

1203.40 Effective date.
1203.41 Recordkeeping requirements.
Appendix to Part 1203—Figures.

Authority: Subpart A is issued under Secs. 201–207, Pub. L. 103–267, 108 Stat. 726–729, 15 U.S.C. 6001–6006. Subpart B is issued under 15 U.S.C. 2063. Subpart C is issued under 15 U.S.C. 2065(b).

Subpart A—The Standard

§ 1203.1 Scope and effective date.

This standard describes test methods and defines minimum performance criteria for protective headgear used by bicyclists. The values stated in SI units are the standard. The inch-pound values stated in parentheses are for information only. The standard shall become effective 1 year after publication of the final rule.

§ 1203.2 Purpose.

The purpose of this standard is to reduce the likelihood of serious injury and death to bicyclists resulting from impacts to the head.

§ 1203.3 Referenced documents.

The following documents are referenced in this standard.

(a) ISO/DIS Standard 6220–1983—Headforms for Use in the Testing of Protective Helmets.[1]

(b) Federal Motor Vehicle Safety Standard 218, Motorcycle Helmets.[2]

(c) SAE Recommended Practice SAE J211 JUN80, Instrumentation for Impact Tests.[3]

§ 1203.4 Definitions.

(a) *Basic plane* means an anatomical plane that includes the auditory meatuses (the external ear openings) and the inferior orbital rims (the bottom edges of the eye sockets). The ISO headforms are marked with a plane corresponding to this basic plane (see Figures 1 and 2).

(b) *Bicycle helmet* means any headgear marketed as suitable for providing protection from head injuries while riding a bicycle.

(c) *Comfort or fit padding* means resilient lining material used to configure the helmet for different ranges of head size. This padding has no significant effect on impact attenuation.

(d) *Coronal plane* is an anatomical plane perpendicular to both the basic and midsagittal planes and containing the midpoint of a line connecting the right and left auditory meatuses. The ISO headforms are marked with a transverse plane corresponding to this coronal plane (see Figures 1 and 2).

(e) *Field of vision* is the angle of peripheral vision allowed by the helmet when positioned on the reference headform.

(f) *Helmet positioning index (HPI)* is the vertical distance from the brow of the helmet to the basic plane, when placed on a reference headform. The size of the headform and the vertical distance shall be specified by the manufacturer.

(g) *Midsagittal plane* is an anatomical plane perpendicular to the basic plane and containing the midpoint of the line connecting the notches of the right and left inferior orbital ridges and the midpoint of the line connecting the superior rims of the right and left auditory meatuses. The ISO headforms are marked with a longitudinal plane corresponding to the midsagittal plane (see Figures 1 and 2).

(h) *Modular elastomer programmer (MEP)*[4] is a cylindrical pad used as the impact surface for the spherical impactor. The MEP is 152 mm (6.0 in.) in diameter, and 25 mm (1.0 in.) thick. It is affixed to the top surface of a flat, 6.35 mm (0.25 in.) thick aluminum plate. The hardness of the MEP is 60 ± 2 Shore A scale durometer.

(i) *Preload ballast* is a "bean bag" filled with lead shot placed on the helmet to secure its position on the headform. The mass of the preload ballast is 5 kg (11 lb).

(j) *Projection* is any part of the helmet, internal or external, that extends beyond the faired surface.

(k) *Reference headform* is a headform used as a measuring device and contoured in the same configuration as one of the test headforms A, E, J, M, and O defined in ISO DIS 6220–1983. The reference headform shall include surface markings corresponding to the basic, coronal, midsagittal, and reference planes (see Figures 1 and 2).

(l) *Reference plane* is a plane marked on the ISO headforms at a specified distance above and parallel to the basic plane (see Figure 3).

(m) *Retention system* is the complete assembly that secures the helmet in a stable position on the wearer's head.

(n) *Shield* means optional equipment for helmets that is used in place of goggles to protect the eyes.

(o) *Spherical impactor* is a 146 mm (5.75 in.) diameter aluminum sphere, with a mass of 4005 ± 5 g (8.83 ± 1.10 lb), that is specifically machined for mounting onto the ball-arm connector of the drop-test assembly. The impactor is used to check the electronic equipment (see § 1203.17).

(p) *Test headform* is a test headform of sizes A, E, J, M, and O as defined in ISO/DIS 6220–1983 and constructed of K–1A magnesium alloy. The test headforms shall include surface markings corresponding to the basic, coronal, midsagittal, and reference planes (see Figure 2).

(q) *Test region* is the area of the helmet, above a specified test line, that is subject to impact testing.

(r) *Visor (peak)* is optional helmet equipment for protection against sun or glare, and is sometimes used as a rock or dirt deflector.

§ 1203.5 Construction requirements.

(a) *General.* The helmet shall be constructed to reduce the acceleration of the wearer's head and to remain on the wearer's head during impact. Optional devices (such as visors and shields) fitted to the helmet shall be designed so that they are unlikely to cause injury in an accident. If the absence of any detachable component of the helmet does not prevent its being worn, then this absence must not compromise either the retention system or the helmet's impact protection. If any part of the helmet detaches during testing, it must not present a laceration or puncture hazard or reduce the coverage of the head.

(b) *Projections.* Any feature projecting more than 7 mm (0.28 in.) beyond the outer surface must readily break away; all other projections on the outer surface shall be smoothly faired and offer minimal frictional resistance to tangential impact forces. There shall be no feature on the inner surface projecting more than 2 mm (0.08 in.) into the helmet interior. Any internal rigid projections that can contact the wearer's head during impact shall be protected by some means of cushioning.

(c) *Retention System.* The retention system shall be designed and

[1] Available from American National Standards Institute, 11 W. 42nd St., 13th Floor, New York, NY 10036.

[2] Available from the Department of Transportation, National Highway Traffic Safety Administration, Office of Vehicle Safety Standards, 400 7th St. S.W., Washington D.C. 20590.

[3] Available from Society of Automotive Engineers, 400 Commonwealth Dr., Warrendale, PA 15096.

[4] Available from Research and Testing Company, 1415 Park Ave., Hoboken, NJ 07030.

constructed to meet the requirements of § 1203.12(b)–(c) of this standard.

(d) *Materials.* Materials used in the helmet shall be durable and resistant to exposure to sun, rain, cold, dust, vibration, perspiration, and products likely to be applied to the skin or hair. Similarly, the materials should not degrade due to temperature extremes likely to be encountered in routine storage or transportation. Materials known to cause skin irritation or disease shall not be used. Lining materials, if used, may be detachable for washing. If hydrocarbons, cleaning fluids, paints, transfers or other additions will affect the helmet adversely, a warning shall be provided.

§ 1203.6 Labeling and instructions.

(a) *Labeling.* Each helmet shall be marked so that the following information is easily visible and legible to the user and is likely to remain legible throughout the life of the helmet:

(1) Model designation.

(2) A warning to the user that no helmet can protect against all possible impacts, and that for maximum protection the helmet must be fitted and attached properly to the wearer's head in accordance with the manufacturer's fitting instructions.

(3) A warning to the user that the helmet may, after receiving an impact, be damaged to the point that it is no longer adequate to protect the head against further impacts, and that this damage may not be visible to the user. This label shall also state that a helmet that has sustained an impact should be returned to the manufacturer for competent inspection or be destroyed and replaced.

(4) A warning to the user that the helmet can be damaged by contact with common substances (for example, certain solvents, cleaners, hair tonic, etc.), and that this damage may not be visible to the user. This label should also contain any recommended cleaning agents and procedures and list any known common substances that will cause damage.

(5) The statement "Not for Motor Vehicle Use" shall be on the interior of the helmet.

(b) *Instructions.* Each helmet shall have the following accompanying instructions:

(1) Fitting and positioning instructions, including graphic representation of proper positioning.

(2) A list of any known common substances that are known to be capable of causing damage to the helmet, and a warning against contacting the helmet with these substances.

§ 1203.7 Samples for testing.

(a) *General.* Helmets shall be tested in the condition in which they are offered for sale. They must pass all tests, both with and without any attachments that may be included.

(b) *Number of samples.* Five samples of each size for each model offered for sale are required to test conformance to this standard.

§ 1203.8 Conditioning environments.

Helmets shall be conditioned to one of the following environments prior to testing in accordance with the test schedule at § 1203.13.

(a) *Ambient condition.* This is the ambient condition of the test laboratory, which shall be within the ranges of temperature of 17° C to 27° C (63° F to 81° F) and of relative humidity of 20 to 80 percent. The barometric pressure in all conditioning environments shall be 75 to 110 kPa (22.2 to 32.6 inches of Hg). All test helmets shall be stabilized within this ambient range for at least 4 hours prior to further conditioning and testing. Storage or shipment within this ambient range satisfies this requirement. The ambient test helmet does not need further conditioning.

(b) *Low temperature.* This is a temperature of −16° C to −13° C (3° F to 9° F). The helmet shall be kept in this environment for 4 to 24 hours prior to testing.

(c) *High temperature.* This is a temperature of 47° C to 53° C (117° F to 127° F). The helmet shall be kept in this environment for 4 to 24 hours prior to testing.

(d) *Water immersion.* The fourth conditioning is full immersion in potable water at a temperature of 15° C to 27° C (59° F to 81° F). The helmet shall be kept in this environment for 4 to 24 hours prior to testing.

§ 1203.9 Test headforms.

Helmets shall be tested on the appropriate size headform. The headforms used for testing shall be sizes A, E, J, M, and O as defined by ISO/DIS 6220–1983. Headforms used for impact testing shall be constructed of K–1A magnesium alloy or other functionally equivalent metal and must have no resonant frequencies below 3000 hz.

§ 1203.10 Selecting the test headform.

(a) Helmets shall be tested on the appropriate size test headform, or two sizes of test headforms. Helmets shall be tested on the largest and smallest size test headforms on which they fit. If a smaller size helmet of the same model fits the smaller headform, the larger helmet will be tested on the larger headform only. When two headform sizes are required, each test set of five helmets will include at least one peripheral vision test, dynamic retention test, positional stability test, and impact attenuation test on each headform.

§ 1203.11 Extent of impact protection—marking the test line.

(a) *For helmets intended for persons over 4 years of age.* Prior to testing, the extent of required protection for helmets intended for persons over 4 years of age shall be determined for each helmet in the following manner.

(1) Position the helmet on the appropriate headform as specified by the manufacturer's head positioning index (HPI) with the brow parallel to the basic plane. Place a 5-kg (11-lb) preload ballast weight on top of the helmet to set the fit padding.

(2) A line shall be drawn on the outer surface of the helmet coinciding with portions of the intersection of that surface of the helmet with the following planes (see Figure 4):

(i) A plane *h* mm above and parallel to the basic plane in the anterior portion of the reference headform;

(ii) A vertical transverse plane *a* mm in front of the external ear opening in a side view:

(iii) A plane *i* mm above and parallel to the basic plane of the reference headform;

(iv) A vertical transverse plane *b* mm behind the center of the external ear opening in a side view; and

(v) A plane *j* mm above and parallel to the basic plane in the posterior portion of the reference headform.

(3) Each of the dimensions *h, a, i, b,* and *j* are shown in the table below for reference headforms A through O.

TABLE 1.—REFERENCE HEADFORM DIMENSIONS

ISO Headform Size	h mm (in.)	a mm (in.)	i mm (in.)	b mm (in.)	j mm (in.)
A	60 (2.36)	29 (1.14)	54 (2.13)	29 (1.14)	29 (1.14)
E	60	32	56	32	3

TABLE 1.—REFERENCE HEADFORM DIMENSIONS—Continued

ISO.Headform Size	h mm (in.)	a mm (in.)	i mm (in.)	b mm (in.)	j mm (in.)
	(2.36)	(1.26)	(2.20)	(1.26)	(1.22)
J	60	34	60	34	35
	(2.36)	(1.34)	(2.36)	(1.34)	(1.38)
M	60	35	60	35	35
	(2.36)	(1.38)	(2.36)	(1.38)	(1.38)
O	60	36	60	36	35
	(2.36)	(1.42)	(2.36)	(1.42)	(1.38)

(4) These lines enclose the top of the helmet and are the boundary of the extent of protection. The helmet fails to meet the standard if any point of this line falls below the edge of the helmet. A test line shall be drawn within this extent of protection that is 15 mm (0.59 in.) from the closest point on the boundary. The center of the impact sites shall be selected at any point on the helmet on or above the test line.

(b) *For helmets intended for children 4 years of age and under.* Prior to testing, the extent of required protection for helmets intended for children 4 years of age and under and tested on the ISO A headform shall be determined for each helmet in the following manner.

(1) Define an adjusted basic plane on the ISO A reference headform, located 128 mm (5.04 in.) below a plane tangent to the apex of the headform and inclined 15 degrees to the horizontal (see Figure 5).

(2) Define fore and rear planes, located 58 mm (2.28 in.) and 116 mm (4.57 in.) from the front surface of the headform and parallel to the coronal plane.

(3) Define a point B, located on the fore plane and 54 mm (2.13 in.) above the adjusted basic plane. (Dimensions defining the locations of points B, C, D, E, and F are measured perpendicular to the 15 degree incline of the adjusted basic plane).

(4) Define a point C, located on the fore plane and 31 mm (1.22 in.) above the adjusted basic plane.

(5) Define a point D, located on the rear plane and 31 mm (1.22 in.) above the adjusted basic plane.

(6) Define a point E, located on the rear plane and 8 mm (0.31 in.) above the adjusted basic plane.

(7) Define a point F, located on the rear surface of the headform and 8 mm (0.31 in.) above the adjusted basic plane.

(8) Define a horizontal line AB from the front surface of the headform to the fore plane.

(9) Define the extent of protection by connecting points B, C, D, E, and F.

(10) Position the helmet on the headform in accordance with the HPI and place a 5-kg (11-lb) preload ballast weight on top of the helmet to set the fit padding.

(11) Line ABCDEF shall be traced onto the outer surface of the helmet to mark the boundary for the extent of protection. The helmet fails to meet the standard if any point of this line falls below the edge of the helmet. A test line shall be drawn within this extent of protection that is 15 mm (0.59 in.) from the closest point on the boundary. The center of impact sites shall be selected at any point on or above the test line.

§ 1203.12 Test requirements.

(a) *Peripheral vision.* The helmet shall allow unobstructed vision through a minimum of 105° to the left and right sides of the midsagittal plane when measured in accordance with § 1203.14 of this standard.

(b) *Positional stability.* The helmet shall not release from the test headform when tested in accordance with § 1203.15 of this standard.

(c) *Dynamic strength of retention system.* The retention system shall remain intact without elongating more than 30 mm (1.2 in.) when tested in accordance with § 1203.16 of this standard.

(d) *Impact attenuation.* (1) The peak acceleration of any impact shall not exceed 300-g when tested in accordance with § 1203.17 of this standard.

(2) The time duration of the acceleration waveform during any impact shall not exceed 3 ms at or above 200-g and shall not exceed 6 ms at or above 150-g, when tested in accordance with § 1203.17.

§ 1203.13 Test schedule.

(a) One of the five helmets (or two helmets if two headform sizes are appropriate) shall be tested for peripheral vision in accordance with § 1203.14 of this standard.

(b) Helmet samples 1 through 4 shall be assigned to the ambient, high temperature, low temperature, and water immersion environments, respectively. Helmet 5 shall be assigned to the ambient condition.

(c) Testing must begin within 2 minutes after removal from the conditioning environment. The helmet shall be returned to the conditioning environment within 3 minutes for a minimum of 2 minutes before testing is resumed. If the helmet is out of the conditioning environment for longer than 3 minutes, it shall be reconditioned for 5 minutes for each minute it is out of the conditioning environment beyond the allotted 3 minutes before testing is resumed.

(d) Helmets shall be tested for dynamic strength of the retention system or for positional stability prior to being tested for impact attenuation. Helmet 1 (conditioned in an ambient environment) shall be tested in accordance with the positional stability tests at § 1203.15. Helmets 2 through 4 (conditioned in the high temperature, low temperature, and water immersion environments) shall be tested in accordance with the dynamic retention system strength test at § 1203.16. Helmets 1 through 4 shall then be tested in accordance with the impact attenuation tests on the flat and hemispherical anvils in accordance with the procedure at § 1203.17. Helmet 5 shall only be used to test for impact attenuation on a curbstone anvil in accordance with § 1203.17 of this standard.

§ 1203.14 Peripheral vision test.

Position the helmet on the headform in accordance with the HPI and place a 5-kg (11-lb) ballast weight on top of the helmet to set the fit padding.

(Note: Peripheral vision clearance may be determined when the helmet is positioned for marking the extent of protection and test lines.)

Peripheral vision is measured horizontally from each side of the midsagittal plane around the point K (see Figure 6). The vision shall be unobstructed through a minimum of 105 degrees on both sides of the midsagittal plane from point K.

§ 1203.15 Positional stability test (roll-off resistance).

(a) *Test equipment*—(1) *Headforms.* The geometry of the test headforms shall comply with the dimensions of the full

chin ISO reference headforms sizes A, E, J, M, and O.

(2) *Test fixture.* The headform shall be secured in a test fixture with its vertical axis pointing downward on an axis of 45 degrees to the direction of gravity. The test fixture shall permit rotation of the headform about its vertical axis.

(3) *Dynamic impact apparatus.* A dynamic impact apparatus shall be used to apply a "shock load" to a helmet secured to a test headform. The dynamic impact apparatus shall allow a 4-kg (8.8-lb) drop weight to slide in a guided free fall to impact a rigid stop anvil. The entire mass of the dynamic impact assembly, including the drop weight, shall be no more than 5 kg (11 lb).

(4) *Strap or cable.* A hook and flexible strap or cable shall be used to connect the dynamic impact apparatus to the helmet. The strap or cable shall be of a material having an elongation of no more than 5 mm (0.20 in.) per 300 mm (11.8 in.) when loaded with a 22-kg (48.5 lb) weight in a free hanging position. A typical test apparatus is illustrated at Figure 7.

(b) *Test procedure.* (1) Orient the headform so that its face is down.

(2) Place the helmet on the appropriate size full chin headform in accordance with the HPI and fasten the retention system in accordance with the manufacturer's instructions.

(3) Suspend the dynamic impact system from the helmet by positioning the flexible strap over the helmet along the midsagittal plane and attaching the hook over the edge of the helmet as shown in Figure 7.

(4) Raise the drop weight to a height of 0.6 m (2 ft) and release, allowing it to impact the stop anvil.

(5) The test shall be repeated with the headform face pointing upwards, so that the helmet is pulled from front to rear.

§ 1203.16 Dynamic strength of retention system test.

(a) *Test equipment.* (1) ISO headforms without the lower chin portion shall be used.

(2) The retention system strength test equipment shall consist of a dynamic impact apparatus that allows a 4–kg (8.8–lb) drop weight to slide in a guided free fall to impact a rigid stop anvil. Two cylindrical rods with a diameter of 12.5 ± 0.5 mm (0.49 in. ± 0.02 in.) that have a center-to-center distance of 76.0 ± 1 mm (3.0 ± 0.04 in.) shall make up a stirrup that represents the bone structure of the lower jaw. The entire dynamic test apparatus hangs freely on the retention system. The entire mass of the support assembly, including drop weight, shall be 6 kg ± 0.5 kg (13.2 ± 1.1 lb). A typical test apparatus is shown in Figure 8.

(b) *Test procedure.* (1) Place the helmet on the appropriate size headform on the test device and fasten the strap of the retention system under the stirrup.

(2) Place a preload ballast of 5 kg (11 lb) on top of the helmet to set the comfort or fit padding.

(3) Mark the pre-test position with the entire dynamic test apparatus hanging freely on the retention system.

(4) Raise the 4–kg (8.8–lb) drop weight to a height of 0.6 m (2 ft) and release, allowing it to impact the stop anvil.

(5) Record the maximum elongation of the retention system during the impact. A marker system or a displacement transducer, as shown in Figure 8, are two methods of measuring the elongation.

§ 1203.17 Impact attenuation test.

(a) *Test instruments and equipment.* (1) *Measurement of impact attenuation.* Impact attenuation is determined by measuring the acceleration of the test headform during impact. Acceleration is measured with a uniaxial accelerometer that is capable of withstanding a shock of a least 1000 g. The helmet is secured onto the headform and dropped in a guided free fall, using a wire- or rail-guided apparatus (see Figure 9), onto an anvil fixed to a rigid base. The base shall consist of a solid mass of at least 135 kg (298 lb), the upper surface of which shall consist of a steel plate at least 25 mm (0.98 in.) thick and having a surface area of at least 0.3 m^2 (3.23 ft^2).

(2) *Accelerometer.* A uniaxial accelerometer is mounted at the center of gravity of the test headform with the sensitive axis aligned within 5 degrees of vertical when the test headform is in the impact position. The acceleration data channel and filtering shall comply with SAE Recommended Practice J211 JUN 80, Instrumentation for Impact Tests, Requirements for Channel Class 1000.

(3) *Headform and drop assembly—centers of gravity.* The center of gravity of the test headform is located at the center of the mounting ball on the supporting assembly and lies within a cone with its axis vertical, and forming a 10 degree included angle with the vertex at the point of impact. The center of gravity of the drop assembly lies within the rectangular volume bounded by x = −6.4 mm (−0.25 in.), x = 21.6 mm (0.85 in), y = 6.4 mm (0.25 in.), and y = −6.4 mm (−0.25 in), with the origin located at the center of gravity of the test headform. The rectangular volume has no boundary along the z-axis. The x-y-z axes are mutually perpendicular and have positive or negative designations in accordance with the right-hand rule (see Figure 5 of FMVSS 218). The origin of the coordinate axes also is located at the center of the mounting ball on the supporting assembly (see Figures 6, 7, and 8 of FMVSS 218). The x-y-z axes of the test headform assembly on a monorail drop test equipment are oriented as follows: From the origin, the x-axis is horizontal with its positive direction going toward and passing through the vertical centerline of the monorail. The positive z-axis is downward. The y-axis also is horizontal, and its direction can be decided by the z- and x-axes, using the right-hand rule.

(4) *Drop assembly.* The mass of the drop assembly (which is the combined mass of the instrumented test headform and support assembly, exclusive of the test helmet) for the drop test shall be 5 ± 0.1 kg (11.0 ± 0.22 lb). The mass of the support assembly cannot exceed 25 percent of the mass of the total drop assembly. The mass of the support assembly is the weight of the drop assembly minus the weight of the headform, ball clamp, ball clamp bolts, and accelerometer. The center of gravity of the headform shall be at the center of the mounting ball. The center of gravity of the combined test headform and supporting assembly must meet FMVSS 218 S7.1.8 with any type of guide system.

(5) *Impact anvils.* Impact tests shall be performed against three different anvils as described below. All of the anvils shall be constructed of steel and shall be solid (*i.e.*, without internal cavities).

(i) *Flat Anvil.* The flat anvil shall have a flat surface area with an impact face having a minimum diameter of 125 mm (4.92 in.) and shall be at least 24 mm (0.94 in.) thick (See Figure 10).

(ii) *Hemispherical anvil.* The hemispherical anvil shall have an impact surface with a radius of 48 ± 1 mm (1.89 ± 0.04 in.). The profile of the impact surface shall be one half the surface of a sphere (see Figure 11).

(iii) *Curbstone anvil.* The curbstone anvil shall have two faces making an angle of 105 degrees and meeting along a striking edge with a radius of 15 mm ± 0.5 mm (0.59 ± 0.02 in.). The height of the curbstone anvil shall not be less than 50 mm (1.97 in.), and the length shall not be less than 200 mm (7.87 in.) (see Figure 12).

(b) *Test Procedure*—(1) *Instrument system check.* The system instrumentation shall be checked before and after each series of tests (at least at the beginning and end of each test day) by dropping the spherical impactor (see

§ 1203.4(o)) onto the MEP (see § 1203.4(h)) at an impact velocity of 5.44 m/s ± 2% (17.85 ft/s ± 2%). Three such impacts, at intervals of 75 ± 15 seconds, shall be performed before and after each series of tests. The peak acceleration obtained during these impacts shall be 389 ± 8 g.

(2) *Impact sites.* Each of helmets 1 through 4 (one helmet for each conditioning environment) shall be impacted at four different sites, two impacts on the flat anvil and two impacts on the hemispherical anvil. The fifth helmet shall be impacted once on the curbstone anvil at ambient condition. The center of impact may be on or anywhere above the test line and at least one fifth of the maximum circumference of the helmet from any prior impact center. Rivets and other mechanical fasteners, vents, and any other helmet feature within the test region shall be valid test sites.

(3) *Impact velocity.* The helmet shall be dropped onto the flat anvil from a theoretical drop height of 2 meters (6.56 ft) to achieve an impact velocity of 6.2 m/s ± 2% (20.34 ft/s ± 2%). The helmet shall be dropped onto the hemispherical and curbstone anvils from a theoretical drop height of 1.2 meters (3.94 ft) to achieve an impact velocity of 4.8 m/s ± 2% (15.75 ft/s ± 2%). The impact velocity shall be measured during the last 40 mm (1.57 in) of free-fall for each test.

(4) *Helmet position.* Prior to each test, position the helmet on the test headform in accordance with the HPI. The helmet shall be secured so that it does not shift position prior to impact. The helmet retention system shall be secured in a manner that does not interfere with free-fall or impact.

(5) *Data.* Record the maximum acceleration in g's during impact and the time duration that the acceleration is at or above the 200-g and 150-g levels on the acceleration waveform.

Subpart B—Certification

§ 1203.30 Purpose and scope.

(a) *Purpose.* Section 14(a) of the Consumer Product Safety Act (CPSA), 15 U.S.C. 2063(a), requires every manufacturer (including importers) and private labeler of a product which is subject to a consumer product safety standard to issue a certificate that the product conforms to the applicable standard, and to base that certificate either on a test of each product or on a "reasonable testing program." The purpose of this subpart is to establish requirements that manufacturers and importers of bicycle helmets subject to the Safety Standard for Bicycle Helmets (Subpart A of this Part 1203), shall issue certificates of compliance in the form specified.

(b) *Scope.* The provisions of this subpart apply to all bicycle helmets that are subject to the requirements of the Safety Standard for Bicycle Helmets.

§ 1203.31 Effective date.

Any bicycle helmet manufactured more than 1 year after publication of a final rule must meet the standard and must be certified as complying with the standard in accordance with this rule.

§ 1203.32 Definitions.

The following definitions shall apply to this subpart:

(a) *Manufacturer* means the manufacturer of a helmet manufactured in the United States and the importer of helmets manufactured outside the United States.

(b) *Private labeler* means an owner of a brand or trademark which is used on a bicycle helmet subject to the standard and which is not the brand or trademark of the manufacturer of the bicycle helmet, provided the owner of the brand or trademark caused or authorized the bicycle helmet to be so labeled and the brand or trademark of the manufacturer of such bicycle helmet does not appear on the label.

(c) *Production lot* means a quantity of bicycle helmets from which certain bicycle helmets are selected for testing prior to certifying the lot. All bicycle helmets in a lot must be essentially identical in those design, construction, and material features which relate to the ability of a bicycle helmet to comply with the standard.

(d) *Reasonable testing program* means any tests which are identical or equivalent to, or more stringent than, the tests defined in the standard and which are performed on one or more bicycle helmets within the production lot for the purpose of determining whether there is reasonable assurance that all of the bicycle helmets in that lot comply with the requirements of the standard.

§ 1203.33 Certification testing.

(a) *General.* U.S. manufacturers and importers shall conduct a reasonable testing program to demonstrate that their bicycle helmets comply with the requirements of the standard.

(b) *Reasonable testing program.* This paragraph provides guidance for establishing a reasonable testing program.

(1) A reasonable testing program for bicycle helmets is one that provides reasonable assurance that all bicycle helmets manufactured or imported comply with the standard. Manufacturers and importers may define their own testing programs. Such reasonable testing programs may, at the option of manufacturers and importers, be conducted by an independent third party qualified to perform such testing programs. However, all testing programs must be reasonable, and the manufacturers and importers are responsible for insuring compliance with all requirements of this standard.

(2) To conduct a reasonable testing program, the bicycle helmets shall be divided into production lots. Sample bicycle helmets from each production lot shall be tested in accordance with the reasonable testing program to provide a reasonable assurance that if the bicycle helmets selected for testing meet the standard, all bicycle helmets in the lot will meet the standard. Whenever there is a change in parts, suppliers of parts, or production methods that could affect the ability of the bicycle helmet to comply with the requirements of the standard, the manufacturer shall establish a new production lot for testing.

(3) The Commission will test for compliance with the standard by using the standard's test procedures. However, a reasonable testing program may include either the tests prescribed in the standard or any other reasonable test procedures that assure compliance with the standard.

(4) If the reasonable testing program shows that a bicycle helmet may not comply with one or more requirements of the standard, no bicycle helmet in the production lot can be certified as complying until all noncomplying bicycle helmets in the lot have been identified and destroyed or altered by repair, redesign, or use of a different material or components to the extent necessary to make them conform to the standard. The sale or offering for sale of bicycle helmets that do not comply with the standard is a prohibited act and a violation of section 19(a) of the CPSA (15 U.S.C. 2068(a)), regardless of whether the bicycle helmet has been validly certified.

§ 1203.34 Product certification and labeling by manufacturers (including importers).

(a) *Form of permanent label of certification.* Manufacturers, as defined in § 1203.32(a), which includes importers, shall issue certificates of compliance for bicycle helmets manufactured after the effective date of the standard in the form of a permanent label which can reasonably be expected to remain on the bicycle helmet during the entire period the bicycle helmet is

capable of being used. Such labeling shall be deemed to be a "certificate" of compliance as that term is used in section 14 of the CPSA, 15 U.S.C. 2063.

(b) *Contents of certification label.* The certification labels required by this section shall clearly and legibly contain the following information:

(1) The statement "Complies with CPSC Safety Standard for Bicycle Helmets (16 CFR part 1203)",

(2) The name of the U.S. manufacturer or importer responsible for issuing the certificate,

(3) The address of the U.S. manufacturer or importer responsible for issuing the certificate or, if the name of a private labeler is on the label, the address of the private labeler,

(4) The name and address of the foreign manufacturer, if the helmet was manufactured outside the United States,

(5) An identification of the production lot, and

(6) The month and year the product was manufactured.

(c) *Coding.* The information required by paragraphs (b)(4) through (6) of this section may be in code, provided the person or firm issuing the certificate maintains a written record of the meaning of each symbol used in the code, which record shall be made available to the distributor, retailer, consumer, and Commission upon request. If a bicycle helmet is manufactured for sale by a private labeler, and if the name of the private labeler is on the certification label, the name of the manufacturer or importer issuing the certificate, and the name and address of any foreign manufacturer, may also be in such a code.

(d) *Placement of the label.* The label required by this section must be affixed to the bicycle helmet. If the label is not immediately visible to the ultimate purchaser of the bicycle helmet prior to purchase because of packaging or other marketing practices, a second label that states: "Complies with CPSC Safety Standard for Bicycle Helmets" must appear on the container or, if the container is not visible before purchase, on the promotional material used with the sale of the bicycle helmet.

(e) *Additional provisions for importers*—(1) *General.* The importer of any bicycle helmet subject to the standard in subpart A of this Part 1203 must issue the certificate of compliance required by section 14(a) of the CPSA and § 1203.34 of this subpart. If a reasonable testing program meeting the requirements of this subpart has been performed by or for the foreign manufacturer of the product, the importer may rely in good faith on such tests to support the certificate of compliance provided:

(i) The importer is a resident of the United States or has a resident agent in the United States,

(ii) The records of such tests required by § 1203.41 of subpart C of this part are maintained in the United States, and

(iii) Such records are available to the Commission upon a request to the importer.

(2) *Responsibility of importer.* If the importer relies on tests by the foreign manufacturer to support the certificate of compliance, the importer shall examine the records supplied by the manufacturer to determine that the records of such tests appear to comply with § 1203.41 of subpart C of this part.

Subpart C—Recordkeeping

§ 1203.40 Effective date.

The recordkeeping requirements in this subpart are effective [insert date that is 1 year after publication of the final rule] and apply to bicycle helmets manufactured on or after that date.

§ 1203.41 Recordkeeping requirements.

(a) *General.* Every person issuing certificates of compliance for bicycle helmets subject to the standard in subpart A of this part shall maintain written records which show that the certificates are based on a reasonable testing program. The records shall be maintained for a period of at least 3 years from the date of certification of the last bicycle helmet in each production lot. These records shall be available to any designated officer or employee of the Commission upon request in accordance with section 16(b) of the CPSA, 15 U.S.C. 2065(b).

(b) *Contents of records.* Complete test records shall be maintained. Records shall identify the bicycle helmets tested, the production lot, and the results of the tests, including the precise nature of any failures, and specific actions taken to address any failures. An original paper copy of the test records must be kept by the test laboratory, on paper, with the signature of the technician who performed the test. The test records shall describe in detail the tests that the bicycle helmets have been subjected to, and shall include:

1. Manufacturer's name and address.
2. Model and size of each helmet tested.
3. Identifying information for each helmet tested, including the production lot for each helmet, and the environmental condition under which each helmet was tested.
4. Temperatures in each conditioning environment, and the relative humidity and temperature of the laboratory.
5. Parameters and results of the test for peripheral vision clearance.
6. Failures to conform to any of the labeling and instruction requirements.
7. Performance impact results in sequence stating the location of impact, type of anvil used, velocity prior to impact, maximum acceleration, and time durations that the acceleration is at or above the 200-g and 150-g levels.
8. Parameters and results of the positional stability test.
9. Parameters and results of the dynamic strength of retention system test.
10. Name and location of the test laboratory.
11. Signature of the technician who performed the test.
12. Date of the test.
13. Calibration test results.

(c) *Format for records.* The records required to be maintained by this section may be in any appropriate form or format that clearly provides the required information.

Appendix to Part 1203—Figures

BILLING CODE 6355-01-M

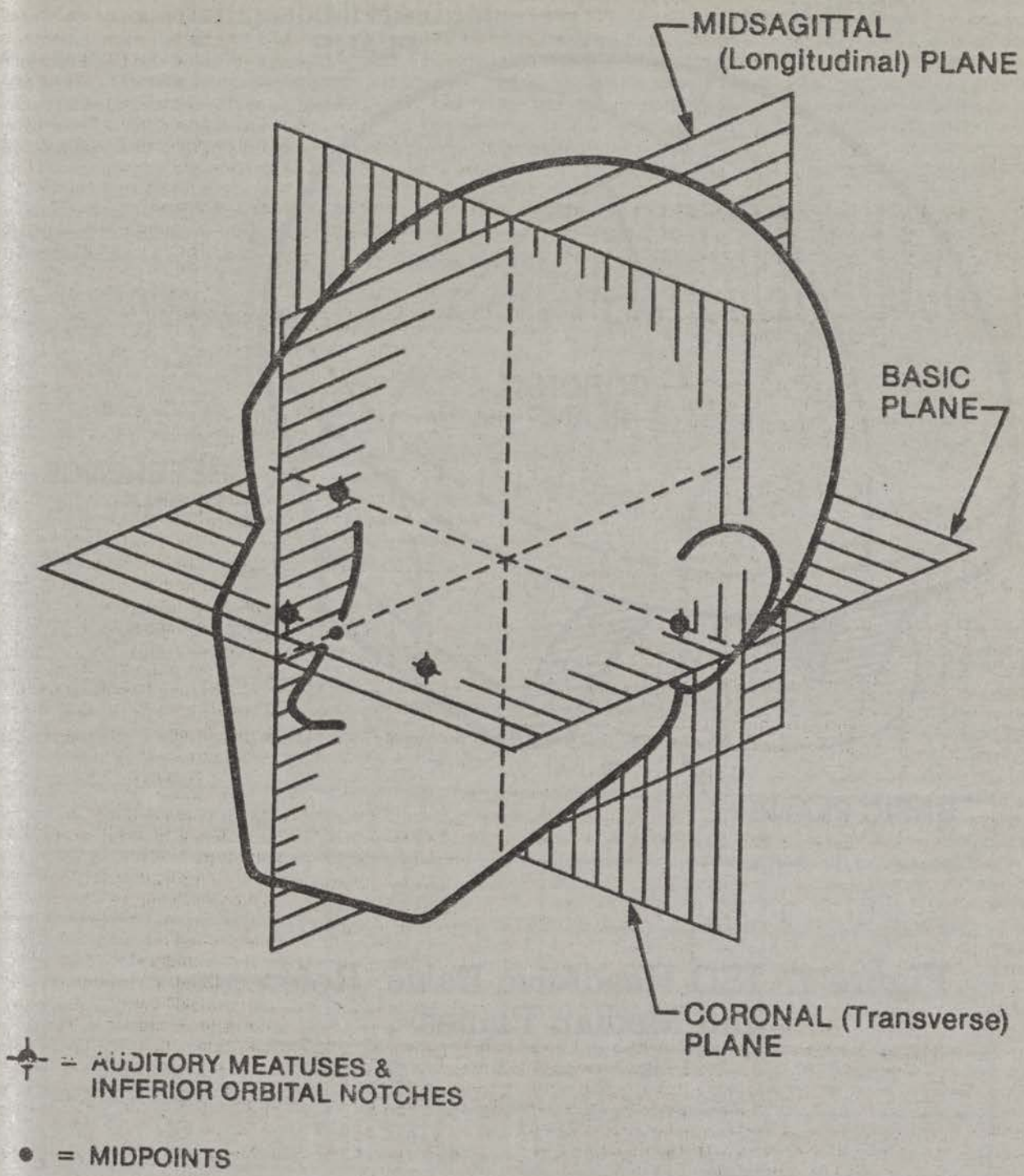

Figure 1. Anatomical Planes

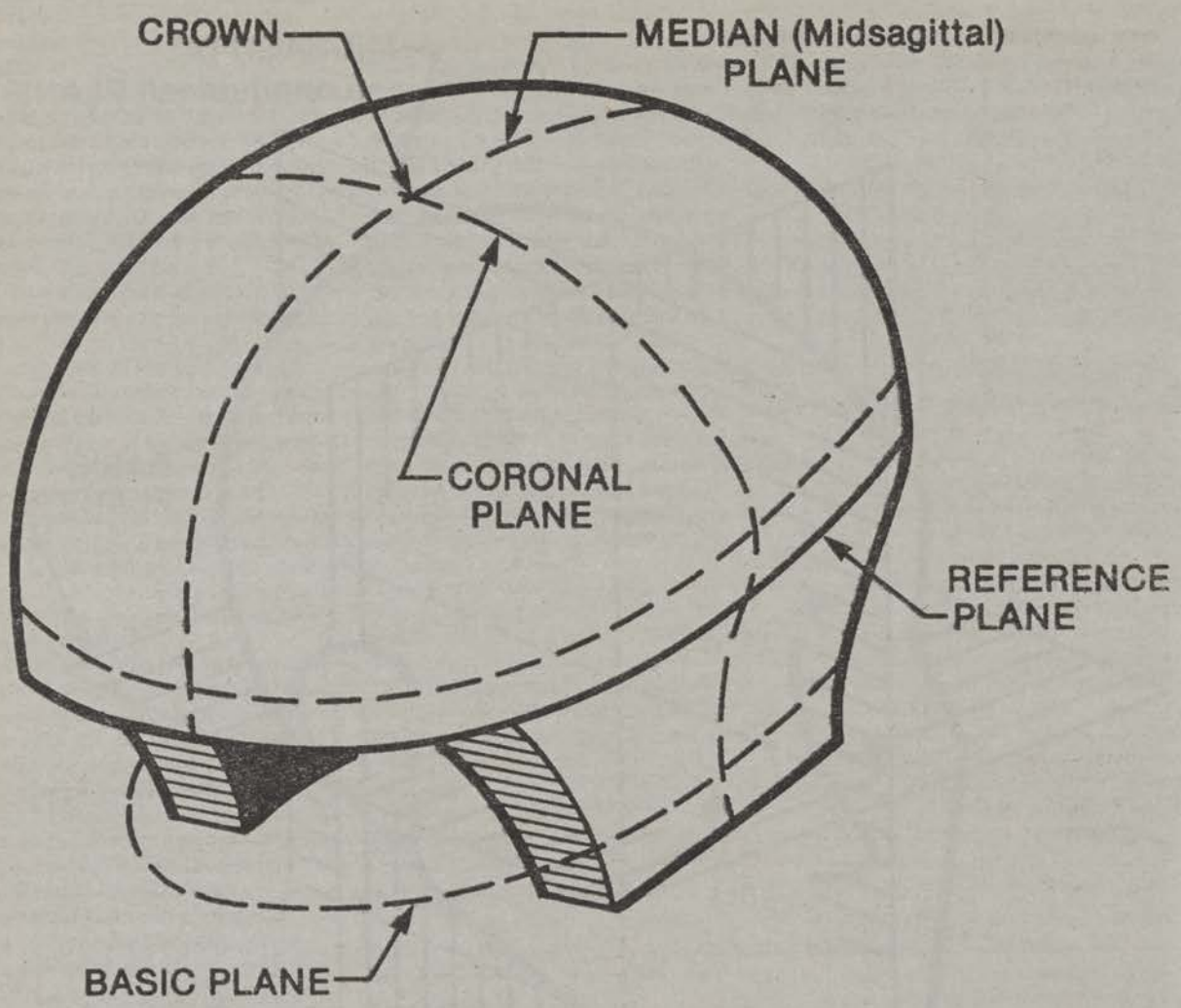

Figure 2. ISO Headform-Basic, Reference, and Median Planes

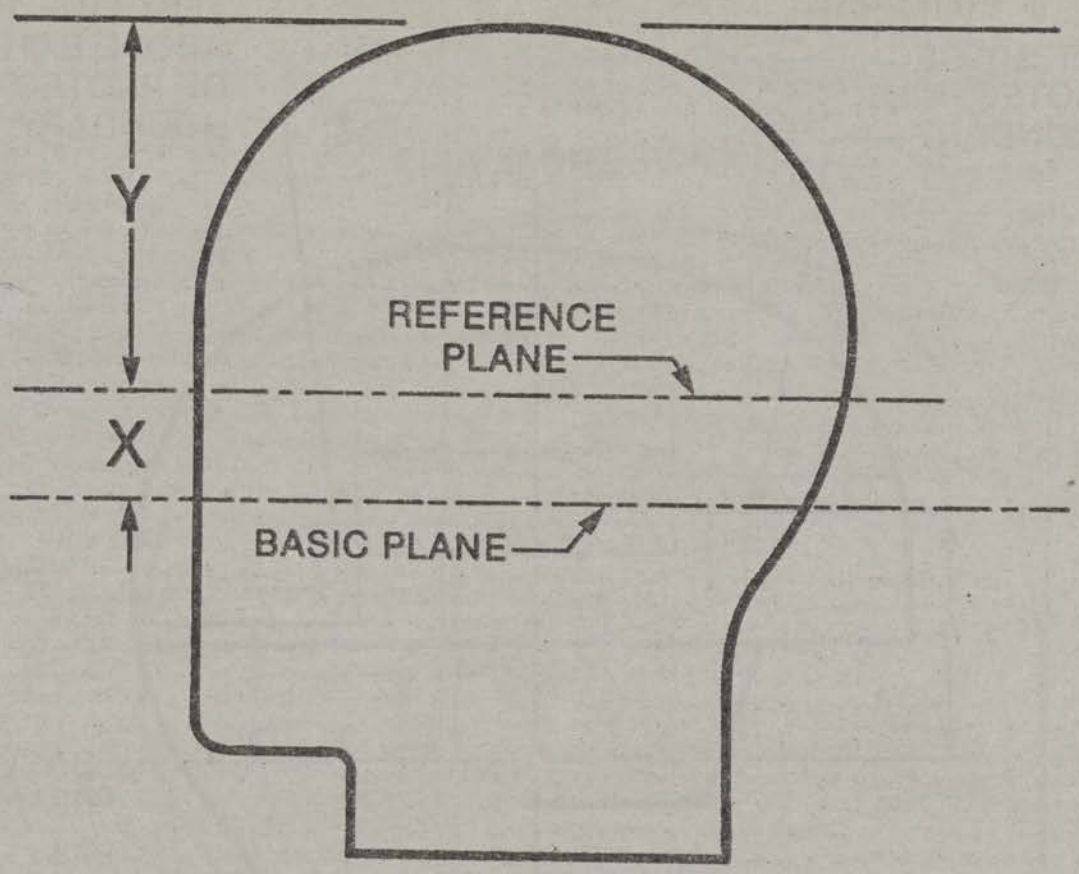

HEADFORM	SIZE	X	Y
A	500	24	90
E	540	26	96
J	570	27.5	102.5
M	600	29	107
O	620	30	110

DIMENSIONS IN MILLIMETERS

Figure 3. Location of Reference Plane

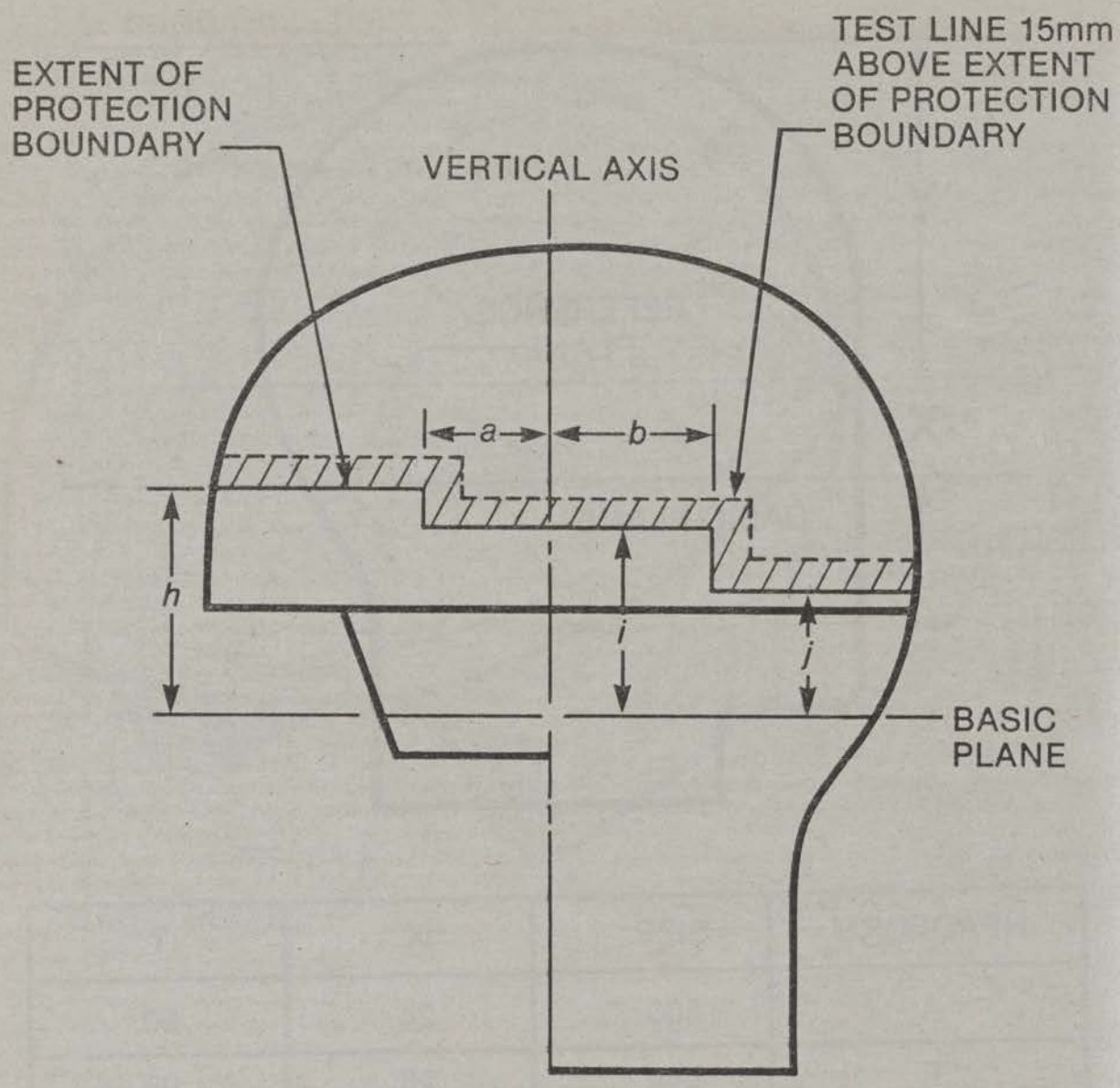

Figure 4. Extent of Protection and Test Line for Helmets Intended for Persons Over Four Years of Age.

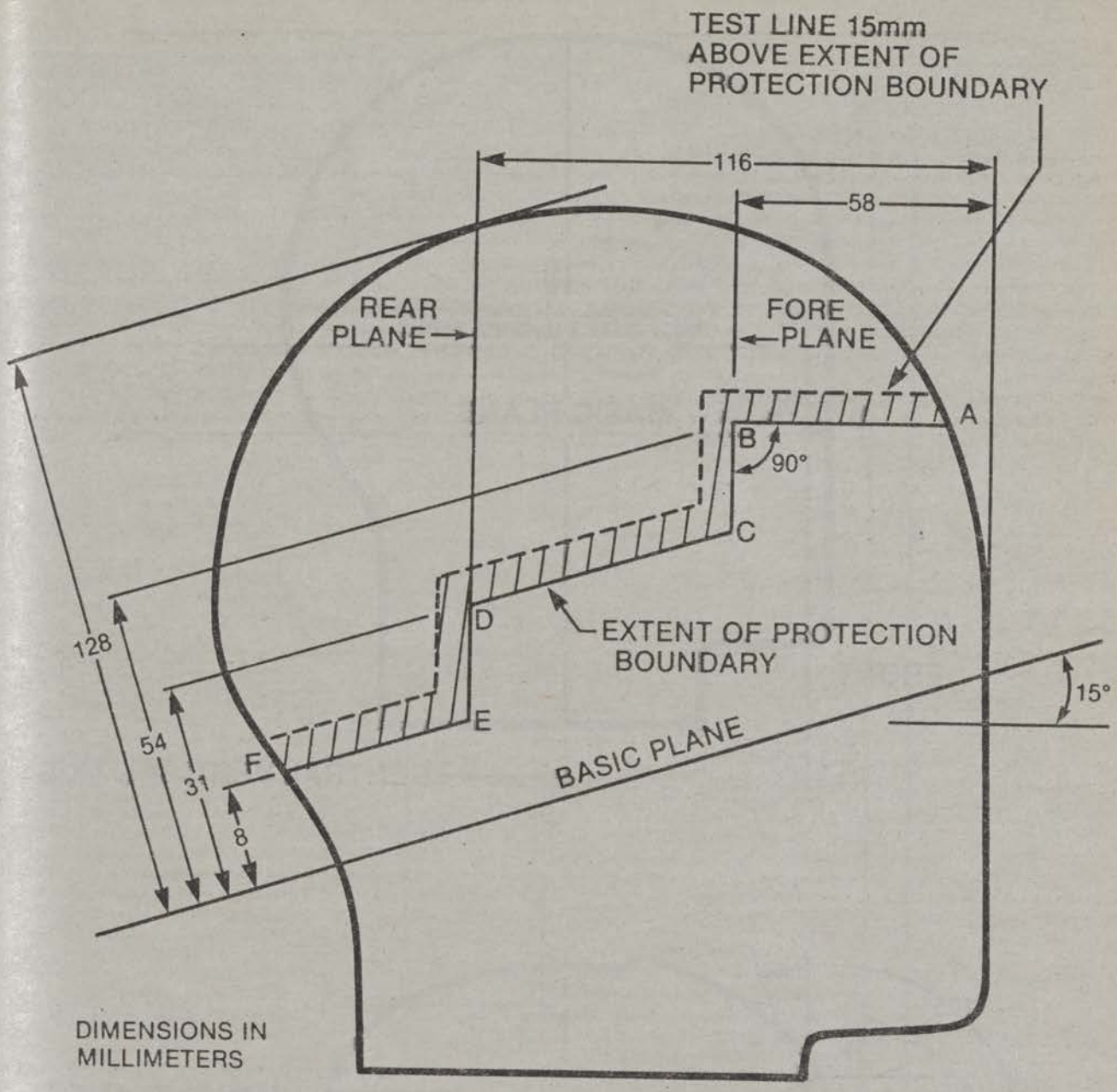

Figure 5. Extent of Protection and Test Line on ISO-A Headform for Helmets Intended for Children Fours Years and Under.

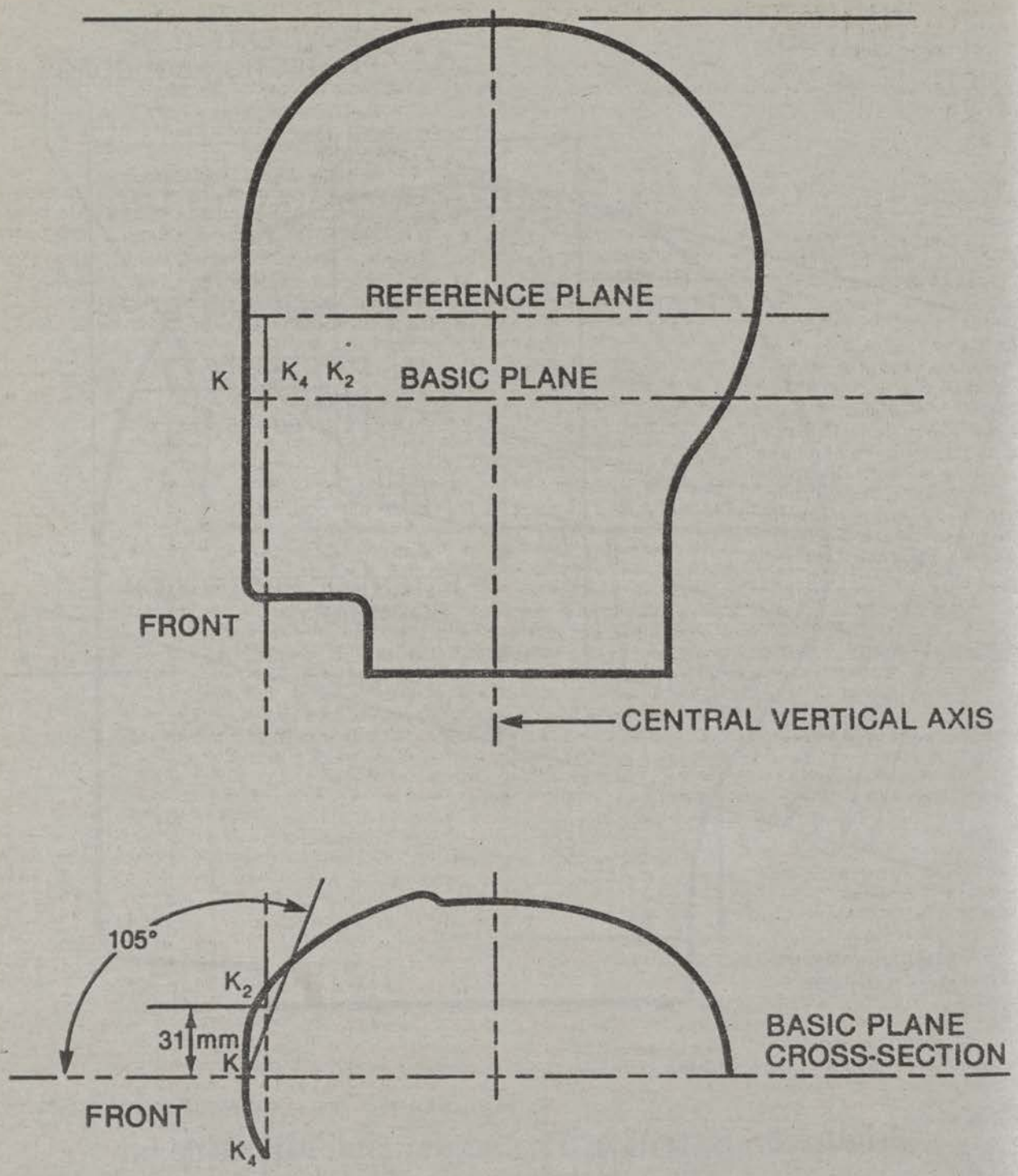

Figure 6. Field of Vision

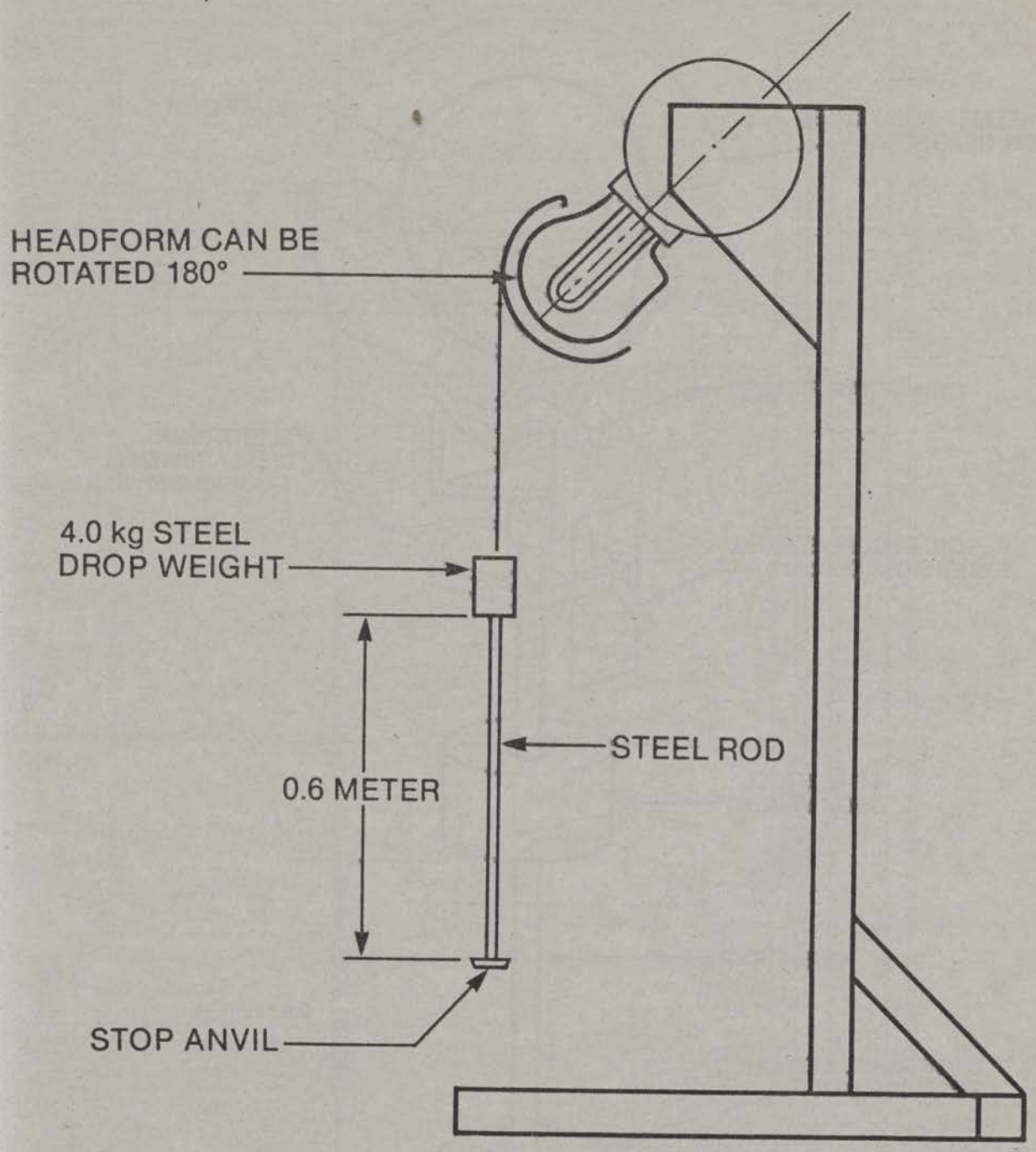

Figure 7. Typical Test Apparatus for Positional Stability Test

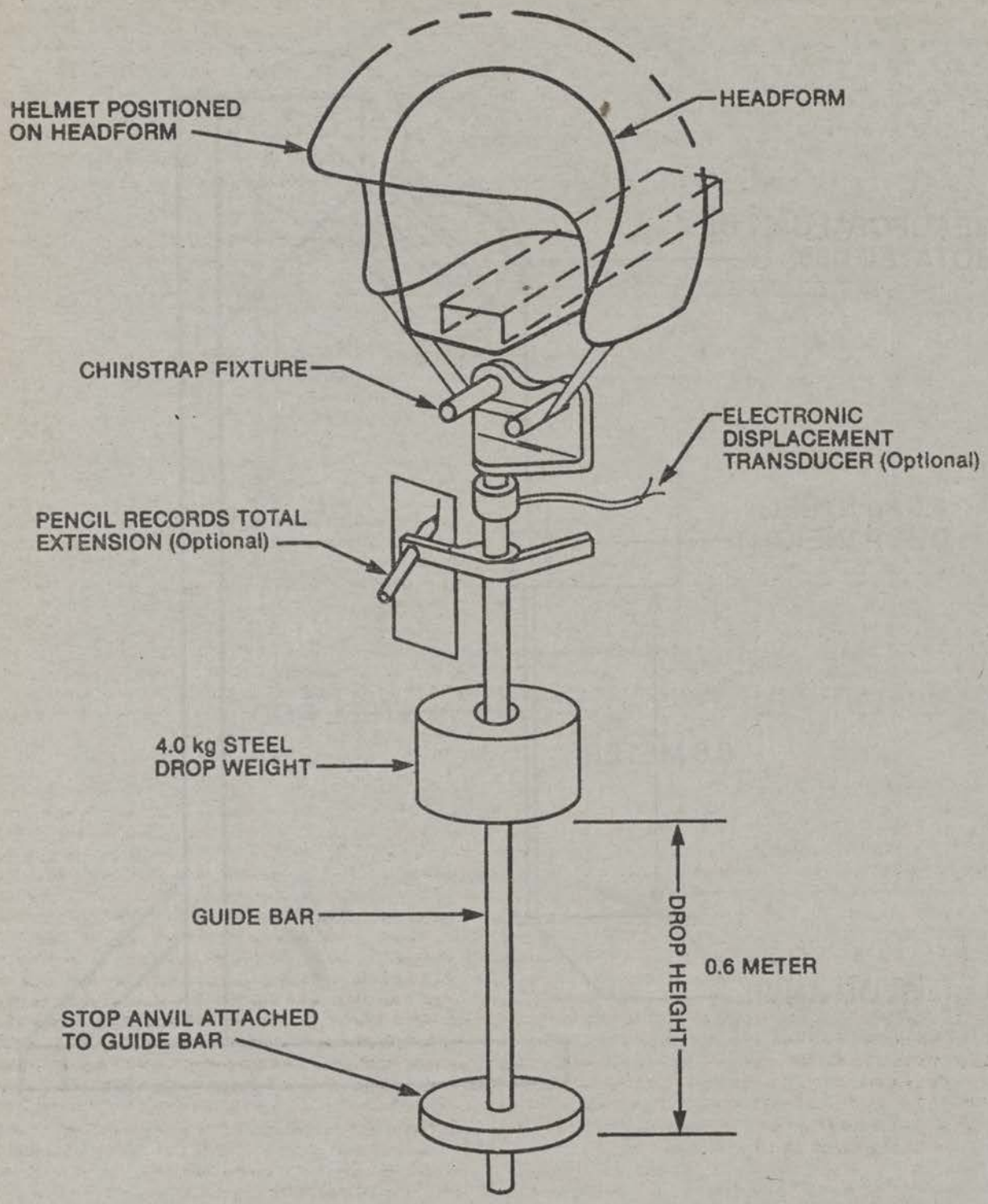

Figure 8. Apparatus for Test of Retention System Strength and Extention

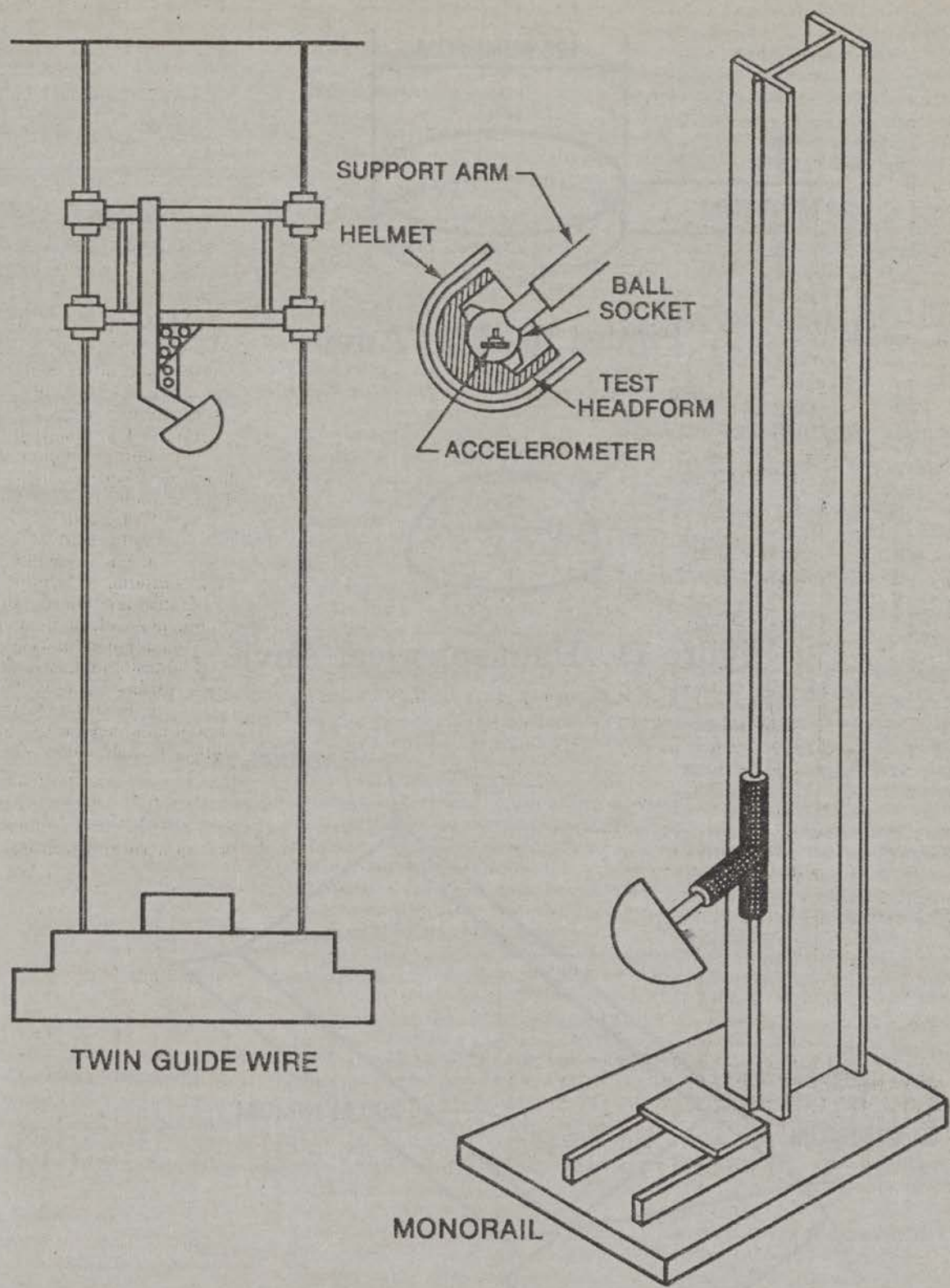

Figure 9. Typical Impact Test Apparatus

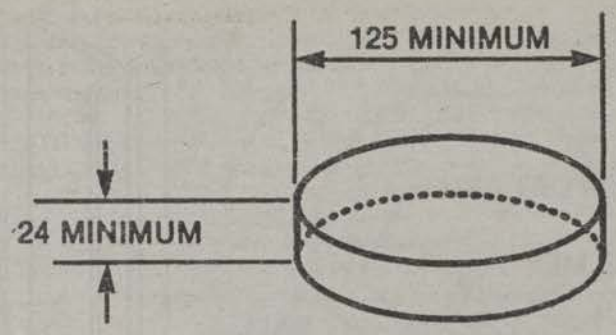

Figure 10. Flat Anvil

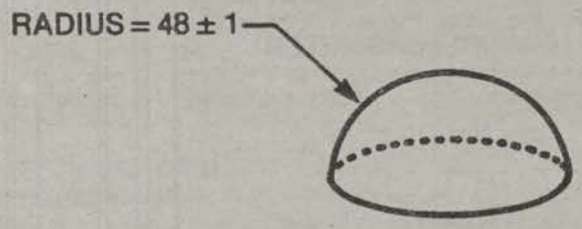

Figure 11. Hemispherical Anvil

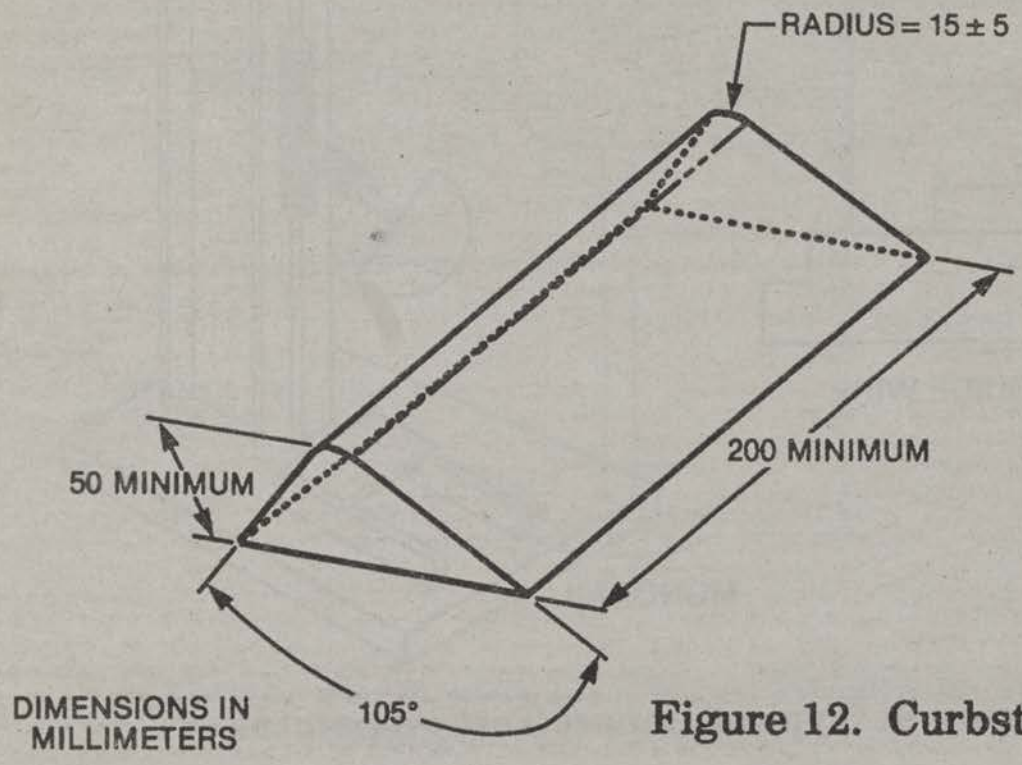

Figure 12. Curbstone Anvil

BILLING CODE 6355-01-C

Dated: August 9, 1994.

Sadye E. Dunn,

Secretary, Consumer Product Safety Commission

[FR Doc. 94–19787 Filed 8–12–94; 8:45 am]

BILLING CODE 6355–01–P

DEPARTMENT OF ENERGY

Federal Energy Regulatory Commission

18 CFR Part 35

[Docket No. RM94–7–000]

Recovery of Stranded Costs by Public Utilities and Transmitting Utilities

August 5, 1994.

AGENCY : Federal Energy Regulatory Commission.

ACTION : Notice of proposed rulemaking; extension of time.

SUMMARY: On June 29, 1994, the Federal Energy Regulatory Commission issued a notice of proposed rulemaking (59 FR 35274, July 11, 1994) to establish provisions concerning the recovery of wholesale and retail stranded costs by public utilities and transmitting utilities under sections 205, 206, 211 and 212 of the Federal Power Act. The Commission is granting the request of several persons for an extension of time for the filing of comments on the proposed rule.

DATES: The time for filing comments is extended from September 9, 1994 to December 9, 1994. The time for filing reply comments is extended from October 11, 1994 to January 23, 1995.

ADDRESSES: Office of the Secretary, 825 North Capitol Street, N.E., Washington, DC 20426.

FOR FURTHER INFORMATION CONTACT: James Douglass, Office of the General Counsel, Federal Energy Regulatory Commission, 825 North Capitol Street, N.E., Washington, D.C. 20426, (202) 208–2143.

Linwood A. Watson, Jr.,

Acting Secretary.

[FR Doc. 94–19824 Filed 8–12–94; 8:45 am]

BILLING CODE 6717–01–P

DEPARTMENT OF THE TREASURY

Internal Revenue Service

26 CFR Part 1

[IA–74–93]

RIN 1545–AS27

Substantiation Requirement for Certain Contributions; Hearing

AGENCY: Internal Revenue Service (IRS), Treasury.

ACTION: Notice of public hearing on proposed rulemaking.

SUMMARY: This document provides notice of a public hearing on proposed Income Tax Regulations relating to the substantiation requirement for certain charitable contributions.

DATES: The public hearing will be held on Thursday, November 10, 1994, beginning at 10:00 a.m. Requests to speak and outlines of oral comments must be received by Thursday, October 20, 1994.

ADDRESSES: The public hearing will be held in the Internal Revenue Service Auditorium, Seventh floor, 7400 Corridor, Internal Revenue Building, 1111 Constitution Avenue NW, Washington, DC. Requests to speak and outlines of oral comments should be mailed to the Internal Revenue Service, P.O. Box 7604, Ben Franklin Station, Attn: CC:DOM:CORP:T:R [IA–74–93], room 5228, Washington, DC 20044.

FOR FURTHER INFORMATION CONTACT: Christina Vasquez of the Regulations Unit, Assistant Chief Counsel (Corporate), (202) 622–6803 (not a toll-free number).

SUPPLEMENTARY INFORMATION: The subject of the public hearing is proposed amendments to the Income Tax Regulations under section 170(f)(8) of the Internal Revenue Code of 1986. The proposed regulations appeared in the **Federal Register** for Friday, May 27, 1994 (59 FR 27515).

The rules of § 601.601(a)(3) of the "Statement of Procedural Rules" (26 CFR part 601) shall apply with respect to the public hearing. Persons who have submitted written comments within the time prescribed in the notice of proposed rulemaking and who also desire to present oral comments at the hearing on the proposed regulations should submit not later than Thursday, October 20, 1994, an outline of the oral comments/testimony to be presented at the hearing and the time they wish to devote to each subject.

Each speaker (or group of speakers representing a single entity) will be limited to 10 minutes for an oral presentation exclusive of the time consumed by the questions from the panel for the government and answer thereto.

Because of controlled access restrictions, attenders cannot be admitted beyond the lobby of the Internal Revenue Building until 9:45 a.m.

An agenda showing the scheduling of the speakers will be made after outlines are received from the persons testifying. Copies of the agenda will be available free of charge at the hearing.

Cynthia E. Grigsby,

Chief, Regulations Unit, Assistant Chief Counsel (Corporate).

[FR Doc. 94–19911 Filed 8–12–94; 8:45 am]

BILLING CODE 4830–01–P

DEPARTMENT OF DEFENSE

Defense Nuclear Agency

32 CFR Part 318

[DNA Instruction 5400.11A]

Defense Nuclear Agency (DNA) Privacy Program

AGENCY: Defense Nuclear Agency, DoD.

ACTION: Proposed rule.

SUMMARY: In accordance with the Privacy Act of 1974, Defense Nuclear Agency (DNA) proposes to exempt a new system of records, HDNA 011, entitled Inspector General Investigation Files, from certain provisions of 5 U.S.C. 552a. The exemption is intended to increase the value of the system of records for law enforcement purposes, to comply with prohibitions against the disclosure of certain kinds of information, and to protect the privacy of individuals identified in the system of records.

DATES: Comments must be received no later than October 14, 1994, to be considered by the agency.

ADDRESSES: Send comments to the General Counsel, Defense Nuclear Agency, 6801 Telegraph Road, Alexandria, VA 22310–3398.

FOR FURTHER INFORMATION CONTACT: Mrs. Sandy Barker at (703) 325–7681.

SUPPLEMENTARY INFORMATION: Executive Order 12866. The Director, Administration and Management, Office of the Secretary of Defense has determined that this Privacy Act rule for the Department of Defense does not constitute 'significant regulatory action.' Analysis of the rule indicates that it does not have an annual effect on the economy of $100 million or more; does not create a serious inconsistency or

otherwise interfere with an action taken or planned by another agency; does not materially alter the budgetary impact of entitlement, grants, user fees, or loan programs or the right and obligations of recipients thereof; does not raise novel legal or policy issues arising out of legal mandates, the President's priorities, or the principles set forth in Executive Order 12866 (1993).

Regulatory Flexibility Act of 1980. The Director, Administration and Management, Office of the Secretary of Defense certifies that this Privacy Act rule for the Department of Defense does not have significant economic impact on a substantial number of small entities because it is concerned only with the administration of Privacy Act systems of records within the Department of Defense.

Paperwork Reduction Act. The Director, Administration and Management, Office of the Secretary of Defense, certifies that this Privacy Act rule for the Department of Defense imposes no information requirements beyond the Department of Defense and that the information collected within the Department of Defense is necessary and consistent with 5 U.S.C. 552a, known as the Privacy Act of 1974.

The DNA Inspector General's Office performs as one of its principal functions under the Inspector General Act of 1978, as amended by the Inspector General Act Amendment of 1988 (Pub. L. 95–452, as amended, 5 U.S.C. App.3) (IG Act), investigations into and enforcement actions concerned with suspected violations. The DNA OIG is responsible for promoting economy, efficiency, and effectiveness in the administration of DNA programs and operations and to detect and prevent fraud, waste and abuse in such programs and operations.

The proposal to use the (k)(2) exemption reflects recognition that certain records in the system may be deemed to require protection from disclosure in order to protect confidential sources mentioned in the files and avoid compromising, impeding, or interfering with investigative and enforcement proceedings. The system would thus be exempt from sections 5 U.S.C. 552a(c)(3); (d)(1) through (d)(4); (e)(1); (e)(4)(G), (H), and (I); and (f). The Director proposes to adopt the exemptions for the above reason.

List of Subjects in 32 CFR Part 318

Privacy.

Accordingly, the Defense Nuclear Agency proposes to revise 32 CFR part 318 as follows:

1. The authority citation for 32 CFR part 318 continues to read as follows:

Authority: Pub. L. 93–597, 88 Stat. 1896 (5 U.S.C. 552a)

2. Section 318.5 is revised as follows:

§ 318.5 Exemptions.

(a) *Exemption for classified material.* All systems of records maintained by the Defense Nuclear Agency shall be exempt under section (k)(1) of 5 U.S.C. 552a, to the extent that the systems contain any information properly classified under E.O. 12356 and that is required by that E.O. to be kept secret in the interest of national defense or foreign policy. This exemption is applicable to parts of all systems of records including those not otherwise specifically designated for exemptions herein which contain isolated items of properly classified information.

(b) *System identifier and name:* HDNA 007, Security Operations.

(1) *Exemption.* Portions of this system of records maybe exempt from the provisions of 5 U.S.C. 552a(c)(3); (d); (e)(4)(G), (H), (I); and (f).

(2) *Authority.* 5 U.S.C. 552a(k)(5).

(3) *Reasons.* To protect the identity of a source who furnished information to the Government under an express promise that the identity of the source would be held in confidence, or, prior to September 27, 1975, under an implied promise that identity of the source would be held in confidence.

(c) *System identifier and name:* HDNA 011, entitled Inspector General Investigation Files.

(1) *Exemption.* Portions of this system of records maybe exempt from the provisions of 5 U.S.C. 552a(c)(3); (d)(1) through (4); (e)(1); (e)(4)(G), (H), and (I); and (f).

(2) *Authority:* 5 U.S.C. 552a (k)(2).

(3) *Reasons.* From subsection (c)(3) because it will enable DNA to conduct certain investigations and relay law enforcement information without compromise of the information, protection of investigative techniques and efforts employed, and identities of confidential sources who might not otherwise come forward and who furnished information under an express promise that the sources' identity would be held in confidence (or prior to the effective date of the Act, under an implied promise.) From subsection (d)(1) through (d)(4) and (f) because providing access to records of a civil investigation and the right to contest the contents of those records and force changes to be made to the information contained therein would seriously interfere with and thwart the orderly and unbiased conduct of the investigation and impede case preparation. Providing access rights normally afforded under the Privacy Act would provide the subject with valuable information that would allow interference with or compromise of witnesses or render witnesses reluctant to cooperate; lead to suppression, alteration, or destruction of evidence; and result in the secreting of or other disposition of assets that would make them difficult or impossible to reach in order to satisfy any Government claim growing out of the investigation or proceeding. From subsection (e)(1), (e)(4)(G), (H), and (I) because it will provide protection against notification of investigatory material including certain reciprocal investigations and counterintelligence information, which might alert a subject to the fact that an investigation of that individual is taking place, and the disclosure of which would weaken the on-going investigation, reveal investigatory techniques, and place confidential informants in jeopardy who furnished information under an express promise that the sources' identity would be held in confidence (or prior to the effective date of the Act, under an implied promise).

Dated: July 20, 1994.

L. M. Bynum,

Alternate OSD Federal Register Liaison Officer, Department of Defense.

[FR Doc. 94–18910 Filed 8–12–94; 8:45 am]

BILLING CODE 5000–04–F

ENVIRONMENTAL PROTECTION AGENCY

40 CFR Part 52

[NC–057–1–6412a; FRL–5004–9]

Approval and Promulgation of Implementation Plans: Approval of Revisions to the North Carolina State Implementation Plan

AGENCY: Environmental Protection Agency (EPA).

ACTION: Proposed rule.

SUMMARY: The EPA proposes to approve the State Implementation Plan (SIP) revision submitted by the State of North Carolina for the purpose of correcting names and addresses, correcting cross-references, adding a reference to the **Federal Register** document containing the nitrogen dioxide (NO_2) increments, and clarifying the visible emissions and

ambient standards regulations. In the final rules section of this **Federal Register**, the EPA is approving the State's SIP revision as a direct final rule without prior proposal because the Agency views this as a noncontroversial revision amendment and anticipates no adverse comments. A detailed rational for the approval is set forth in the direct final rule. If no adverse comments are received in response to that direct final rule, no further activity is contemplated in relation to the proposed rule. If EPA receives adverse comments, the direct final rule will be withdrawn and all public comments received will be addressed in a subsequent final rule based on this proposed rule. The EPA will not institute a second comment period on this document. Any parties interested in commenting on this document should do so at this time.

DATES: To be considered, comments must be received by September 14, 1994.

ADDRESSES: Written comments should be addressed to:

Carol L. Kemker, Regulatory Planning and Development Section, Air Programs Branch, Air, Pesticides & Toxics Management Division, Region IV Environmental Protection Agency, 345 Courtland Street, NE., Atlanta, Georgia 30365.

Copies of the material submitted by the NCDEHNR may be examined during normal business hours at the following locations:

Air and Radiation Docket and Information Center (Air Docket 6102), U.S. Environmental Protection Agency, 401 M Street, SW., Washington, DC 20460.

Environmental Protection Agency, Region IV Air Programs Branch, 345 Courtland Street, NE., Atlanta, Georgia 30365.

North Carolina Department of Environment, Health and Natural Resources, 512 North Salisbury Street, Raleigh, North Carolina 27604.

FOR FURTHER INFORMATION CONTACT: Carol L. Kemker, Regulatory Planning and Development Section, Air Programs Branch, Air, Pesticides & Toxics Management Division, Region IV Environmental Protection Agency, 345 Courtland Street, NE., Atlanta, Georgia 30365. The telephone number is 404–347–2864.

SUPPLEMENTARY INFORMATION: For additional information see the direct final rule which is published in the rules section of this **Federal Register**.

Dated: June 20, 1994.

J. Barker,

Acting Regional Administrator.

[FR Doc. 94–19844 Filed 8–12–94; 8:45 am]

BILLING CODE 6560–50–F

---

40 CFR Parts 124 and 270

[FRL—5051–1]

RCRA Expanded Public Participation and Revisions to Combustion Permitting Procedures

AGENCY: Environmental Protection Agency (EPA).

ACTION: Notice of proposed rulemaking, reopening of comment period.

SUMMARY: The Environmental Protection Agency (EPA or Agency) is reopening the comment period for the RCRA Expanded Public Participation and Revisions to Combustion Permitting Procedures proposed rule, which appeared in the **Federal Register** on June 2, 1994 (see 59 FR 28680). This extension of the comment period is provided to allow commenters an opportunity to finalize their review efforts and responses to the Agency's proposed rulemaking.

DATES: EPA will accept public comments on the proposed rule until September 1, 1994. Comments postmarked after the close of the extended comment period will be stamped late.

ADDRESSES: Written comments on the RCRA Expanded Public Participation and Revisions to Combustion Permitting Procedures proposed rule should be addressed to the docket clerk at the following address: U.S. Environmental Protection Agency, RCRA Docket (5305), 401 M Street, SW., Washington, DC 20460. Commenters should send one original and two copies and place the docket number (F–94–PPCP–FFFFF) in the comments. The docket is open from 9 a.m. to 4 p.m., Monday through Friday, except for Federal holidays. Docket materials may be reviewed by appointment by calling (202) 260–9327. A maximum of 100 pages of material may be copied free of charge from any one regulatory docket. Additional copies are $0.15 per page.

FOR FURTHER INFORMATION CONTACT: For further information, contact the RCRA Hotline at toll free 1–800–424–9346 (in the Washington, DC metropolitan area at (703) 412–9810), or Patricia Buzzell at (703) 308–8632, Office of Solid Waste (5303W), U.S. Environmental Protection Agency, 401 M Street SW., Washington, DC 20460.

SUPPLEMENTARY INFORMATION: On June 2, 1994, EPA proposed requirements for expanding public participation in the RCRA permitting process for all types of RCRA facilities, and for revising permitting procedures for RCRA combustion facilities (see 59 FR 28680 for a detailed discussion of the proposed requirements). The original comment period on the proposed rule ended August 1, 1994.

On July 25, 1994, the Agency received a joint request from two commenters asking for an extension to the comment period, in order to complete a thorough and comprehensive analysis of the proposal. EPA subsequently heard from several other commenters requesting additional time to develop and submit their comments.

EPA specifically solicited public comments on a number of items in the proposed rule, and would like to ensure that the public has ample opportunity to address these, and any other, items, in their comments. Therefore, the Agency has decided to reopen the comment period on the RCRA Expanded Public Participation and Revisions to Combustion Permitting Procedures proposed rule until September 1, 1994.

Dated: August 8, 1994.

Elliott P. Laws,

Assistant Administrator, Office of Solid Waste and Emergency Response.

[FR Doc. 94–19759 Filed 8–12–94; 8:45 am]

BILLING CODE 6560–50–M

---

40 CFR Part 268

[SWH–FRL–5050–8]

Hazardous Waste Management System: Land Disposal Restrictions

AGENCY: Environmental Protection Agency (EPA).

ACTION: Notice of intent to approve application for a case-by-case extension of land disposal restrictions effective date and request for comment.

SUMMARY: Pursuant to Section 3004(h)(3) of the Resource Conservation and Recovery Act (RCRA) (42 U.S.C. 6924(h)(3) and 40 CFR 268.5), EPA is proposing to approve the application submitted by Great Lakes Chemical Corporation (Great Lakes), requesting an extension of the June 30, 1994, effective date of the RCRA land disposal restrictions (LDR) applicable to wastewaters with the hazardous wastes codes K117, K118, K131, K132, and F039. To be granted such a request, the applicant must demonstrate that there is insufficient capacity to manage its waste and that he has entered into a binding

contractual commitment to construct or otherwise provide such capacity but due to circumstances beyond its control, such capacity cannot reasonably be made available by the effective date. If this proposed action is finalized, Great Lakes will be allowed to continue to treat, store, or dispose of its K117, K118, K131, K132, and F039 wastes as currently practiced, until June 30, 1995, without being subject to the land disposal restrictions applicable to such wastes. If warranted, EPA may grant a renewal of this extension, for up to one year, which, if requested and granted, would extend the effective date of the LDR for these wastestreams to, at a maximum, June 30, 1996.

DATES: Comments on this notice must be received on or before September 14, 1994.

ADDRESSES: The official record of this action is identified by Docket number F–94–GLCP–FFFFF. The public must send an original and two copies of their comments to: U.S. Environmental Protection Agency, RCRA Information Center (5305), Room M2616, 401 M Street, SW, Washington, DC 20460. Place the Docket Number F–94–GLCP–FFFFF on all copies of your comments. Documents in the docket are available for viewing at this same address. The RCRA Information Center is open from 9:00 a.m. to 4:00 p.m., Monday through Friday, except for Federal holidays. The public must make an appointment to review docket materials by calling (202) 260–9327. Copies cost $.15 per page.

FOR FURTHER INFORMATION CONTACT: The RCRA/Superfund Hotline, at (800) 424–9346 (toll-free) or (703) 412–9810, in the Washington, DC metropolitan area. The TDD Hotline number is (800) 553–7672, or (703) 486–3323, locally. For information on specific aspects of this notice contact William J. Kline, Office of Solid Waste, Capacity Programs Branch (5302W), U.S. Environmental Protection Agency, 401 M Street, S.W. Washington, D.C. 20460, (703) 308–8440.

SUPPLEMENTARY INFORMATION:

I. Background

A. Congressional Mandate

Congress enacted the Hazardous and Solid Waste Amendments (HSWA) of 1984 to amend the Resource Conservation and Recovery Act (RCRA), to impose additional responsibilities on persons managing hazardous wastes. Among other things, HSWA required EPA to develop regulations that would impose restrictions on the land disposal of hazardous wastes. In particular, Sections 3004 (d) through (g) prohibit the land disposal of certain hazardous wastes by specified dates in order to protect human health and the environment except that wastes that meet treatment standards established by EPA are not prohibited and may be land disposed. Section 3004(m) requires EPA to set "levels or methods of treatment, if any, which substantially diminish the toxicity of the waste or substantially reduce the likelihood of migration of hazardous constituents from the waste so that short-term and long-term threats to human health and the environment are minimized."

In developing such a broad program, Congress recognized that adequate alternative treatment, recovery, or disposal capacity which is protective of human health and the environment may not be available by the applicable statutory effective dates. Section 3004(h)(1) authorizes EPA to grant a variance (based on the earliest dates that such capacity will be available but not to exceed two years) from the effective date which would otherwise apply to specific hazardous wastes. In addition, under Section 3004(h)(2), EPA is authorized to grant an additional extension of the applicable deadline on a case-by-case basis for up to one year. Such an extension is renewable once for up to one additional year.

On November 7, 1986, EPA published a final rule (51 *FR* 40572) establishing the regulatory framework to implement the land disposal restrictions program, including the procedures for submitting case-by-case extension applications.

On August 18, 1992, EPA published a final rule (57 *FR* 37194, 37252), establishing treatment standards under the land disposal restrictions (LDR) program for certain hazardous wastes listed after November 8, 1984, including the following:

1. K117–Wastewaters from the reactor vent gas scrubber in the production of ethylene dibromide via the bromination of ethylene.

2. K118–Spent adsorbent solids from the purification of EDB produced by bromination of ethylene.

3. K131–Wastewater from the reactor and acid dryer from the production of methyl bromide.

4. K132–Spent adsorbent and wastewater separator solids from the production of methyl bromide.

Because of a determination that available treatment, recovery, or disposal (TRD) capacity did not exist at that time for wastewaters K117, K118, K131, and K132 that are underground injected, EPA granted a two-year national capacity variance for these wastes. The variance expired on June 30, 1994.

B. Summary of Application

The Great Lakes facility, located in El Dorado, Arkansas, uses extracted bromine from brine-bearing groundwater formations in the El Dorado, Arkansas area to produce bromine and brominated specialty chemicals. This case-by-case LDR extension application addresses effluent from the on-site process water treatment plant (PWTP) and ground water treatment plant (GWTP) that currently is disposed in Class I underground injection wells at this facility. Wastewaters (K117, K131) recovered as a result of ongoing corrective action, at a rate of up to 100 gallons per minute, and leachate (K118, K132) that is currently recovered, at a rate of up to 10 gallons per minute, from two closed on-site landfills, are treated in the GWTP. Effluent from the GWTP is piped to the PWTP where it is mixed with approximately 233 gallons per minute of wastewater from production processes (K131), for equalization and neutralization. The more than 500,000 gallons per day of effluent that is generated from the PWTP for subsequent management by underground injection constitutes the full volume of wastes for which an extension of the LDR effective date is sought by Great Lakes.[1]

Great Lakes states in its application that the effluent waste stream being disposed by underground injection will meet the applicable BDAT standards if the leachate is treated separately. Great Lakes has evaluated numerous treatment processes to determine which one will meet the BDAT standards; based on this evaluation, Great Lakes has concluded that conventional wastewater treatment technology cannot be used due to the complex chemistry posed by the presence of organic and inorganic brominated compounds in the leachate. As such, Great Lakes is proposing to construct a treatment system using ozonation technology, in conjunction with air stripping and carbon adsorption, to treat the leachates to applicable BDAT treatment

[1] Under 40 CFR 261.3 (a)(2)(iv), the waste codes that apply to this effluent are K117, K118, K131, and K132. However, the mixture will also be subject to the treatment standards for F039, since that is a component of the mixture. See 268.41(b). In particular, treatment standards for K118 and K132 were promulgated in the LDR Phase 1 rule published on August 18, 1992. Since leachate from the land disposal of more than one waste code is considered multisource leachate (F039), the leachate generated at Great Lakes is considered F039 and the treatment standards for F039 apply. In addition, multisource leachate that is derived solely from newly identified wastes (such as from K118 and K132 only) is considered a newly identified waste.

standards, prior to their continued disposal in onsite Class I underground injection wells. This treatment system is expected to be completed and functional within 121 days of receiving approval from the Arkansas Department of Pollution Control and Ecology (ADPCE) to construct the treatment system.

In addition to constructing a treatment system to treat the leachates to BDAT standards, Great Lakes also considered segregating the leachates and sending it off-site for treatment and disposal as an interim measure to manage its leachates during the construction of the proposed treatment system. As discussed below, although there is insufficient off-site commercial treatment capacity to treat the more than 500,000 gallons per day of waste for which Great Lakes is requesting a case-by-case extension, there is enough capacity to manage the segregated leachates component of the wastes, i.e., approximately 14,000 gallons per day.

However, in order to use the available off-site commercial capacity to treat its leachates, Great Lakes would need to construct a transfer facility to enable the loading of the leachates onto trucks for off-site transport. Great Lakes applied for a permit modification to the ADPCE for the construction of an interim transfer facility on May 10, 1994. The ADPCE determined that a permit modification was necessary because the transfer facility requires the use of a filtration system (a type of hazardous waste treatment). It is unclear at present how much time it will take for ADPCE to approve the permit modification and for Great Lakes to construct the transfer facility, upon receiving approval of the permit modification. EPA believes, based on past experience, that the permit modification approval process and facility construction will take between several months and six months.

In the process of evaluating the Great Lakes case-by-case extension application, EPA considered several options. One option was simply to propose to approve the case-by-case extension, until June 30, 1995, to allow Great Lakes to continue disposing of these wastes by on-site underground injection until the proposed treatment system is constructed and brought on-line in Spring 1995. Another option considered by EPA was to propose a case-by-case extension, for a period of time less than one year, to allow Great Lakes the time to receive approval for and to construct a transfer facility to send that portion of the more than 500,000 gallons per day of wastes (including the leachates) being generated for which off-site treatment capacity is available, i.e., between 298,000 to 385,000 gallons per day of capacity. A third option, given the availability of off-site treatment capacity, was to propose to approve the case-by-case extension, for a limited period of time —perhaps six months,— to allow the continued injection of the wastes until Great Lakes received approval for and constructed the necessary transfer facility to send the leachates portion of the waste stream to off-site treatment and disposal.

As discussed below, EPA is convinced of Great Lakes' commitment to construct and operate a treatment system to treat the leachates to BDAT standards prior to underground injection. Indeed, Great Lakes plans to proceed with the construction of the treatment system whether or not a transfer facility is provided to temporarily send these wastes to off-site treatment/disposal. Permit modification approval and construction of a transfer facility may take as much or nearly as much time as would permit approval and construction of the proposed treatment system. Thus, the interim transfer facility would likely only need to be used for a very short period of time, if at all, until the proposed treatment system is brought on-line in early 1995. As such, EPA believes the most reasonable, desirable, and efficient use of all concerned parties resources would best be focused on bringing Great Lakes' proposed treatment system on-line as soon as possible. With this in mind, EPA is proposing the option of considering the Great Lakes case-by-case extension application based on the need to allow the construction of the proposed treatment system.

EPA invites public comment on the proposed option as well as the other options described above.

C. Applicant's Demonstrations Under 40 CFR 268.5 for Case-by-Case Extension

Case-by-case extension applications must satisfy the requirements outlined in 40 CFR 268.5. Great Lakes must address each of the following seven demonstrations of 40 CFR 268.5(a)(1)–(7):

Section 268.5(a)(1). The applicant has made a good-faith effort to locate and contract with treatment, recovery, or disposal facilities nationwide to manage its waste in accordance with the effective date of the applicable restriction (i.e., June 20, 1994).

Great Lakes asked ten hazardous waste management facilities located throughout the nation whether they could treat the waste for which the case-by-case extension is being requested. Of these ten facilities, five facilities indicated they had some available capacity to treat the waste: the Chemical Waste Management, Inc. facilities in Corpus Christi, Texas and Vickery, Ohio, the Gibraltar Chemical Resources facility in Winona, Texas, the GNI Group, Inc. facility in Deer Park, Texas and Rollins Environmental Services in Bayou Sorrel, Louisiana. The facilities indicated they, collectively, had between 298,000 to 385,000 gallons per day of available treatment capacity. Thus, there may be enough available treatment capacity to manage approximately two-thirds of the more than 500,000 gallons per day of waste being generated by Great Lakes, for which a case-by-case extension is being requested.

While there apparently is treatment capacity available to manage a significant portion of this waste Great Lakes noted that there are potential risks to human health and the environment resulting from the transportation of these hazardous wastes. Great Lakes would have to transport the restricted waste to a number of different treatment facilities by truck or railcar, the closest of which is 180 miles away Great Lakes estimates that between 300,000 and 385,000 gallons of waste per day would require over 75 truckloads per day or one truckload approximately every 20 minutes.

Although off-site treatment capacity is available to treat a portion of Great Lakes' wastewaters, the construction and permitting of transfer facilities is also needed to use this capacity Great Lakes states that it would take between several months and six months to construct loading, unloading, and handling equipment to enable this waste to be transported off-site, once necessary permits are approved; a significant but unknown amount of time would be needed to permit such facilities. It should also be noted that even if this waste were shipped off-site for treatment, Great Lakes would still need a case-by-case extension for the remainder of the waste for which no treatment capacity is available.

Hence, EPA believes it is reasonable to conclude, under § 268.5(a)(1), that, because of a lack of existing transfer facilities at this facility and the time needed to permit and construct such facilities, Great Lakes is unable to locate and contract for adequate, alternative treatment capacity for the off-site management of its waste.[2] EPA believes that an equal or perhaps even less

[2] As discussed previously, the Agency also considered an option of limiting the case-by-case to the leachate generated from the on-site landfills. See Section B for discussion.

amount of time may be necessary to construct the proposed treatment system and obtain the necessary permit modifications as it would take for Great Lakes to construct facilities to transport these wastewaters to off-site treatment. EPA agrees that the limitations faced by Great Lakes in using the limited available treatment capacity to treat the wastes generated at its El Dorado, Arkansas facility provide an adequate basis to fulfill the requirements of this demonstration. EPA is specifically interested in receiving comments on this proposed application of the § 268.5(a)(1) standard.

Section 268.5(a)(2). The applicant has entered into a binding contractual commitment to construct or otherwise provide alternative treatment, recovery, or disposal capacity that meets the treatment standards specified in 40 CFR Part 268, subpart D or, where treatment standards have not been specified, such treatment, recovery, or disposal capacity is protective of human health and the environment.

Great Lakes plans to construct a treatment system, using ozonation in conjunction with air stripping and carbon adsorption, at its El Dorado, Arkansas facility to treat the subject wastes to meet BDAT standards. To support its demonstration of a binding contractual commitment to construct the treatment system, Great Lakes has provided EPA with the following documentation:

- Corporate approval of funds to purchase and construct the proposed treatment system at the El Dorado, Arkansas facility to treat the wastes to BDAT standards.
- Purchase Orders for equipment.
- A copy of the contract between Great Lakes and Milam Construction Company, as the general contractor, for the installation of equipment and the construction of the treatment system.

Great Lakes has also provided data showing that its proposed treatment system will be capable of providing the necessary treatment to meet the applicable BDAT standards for these waste codes. Great Lakes will employ air stripping, ozonation, and carbon adsorption units to remove listed organic constituents to applicable BDAT limits.

EPA recently proposed to list certain 2,4,6-tribromophenol (TBP) wastes as hazardous waste and to add these wastes to the list of hazardous constituents in Appendix VIII of 40 CFR Part 261 (see 59 FR 24530, May 11, 1994). These wastes also are generated at the Great Lakes El Dorado facility and the proposed hazardous waste listing of TBP, if finalized, would require that Great Lakes eventually treat these wastes to BDAT (not yet specified). In any case, Great Lakes has stated that it anticipates that its proposed treatment system will effectively treat TBP at such time that treatment of TBP is required. (EPA is investigating what BDAT levels for TBP would ensure that any treated discharge would not be expected to have any significant aquatic effects.) Because the treatment levels for TBP have not yet been established by the Agency, it is impossible to determine if the proposed treatment system will meet such requirements. However, the Agency will expect Great Lakes to modify the treatment system if necessary to meet TBP treatment standards when and if such standards are set.

EPA believes, as evidenced by the progress made by Great Lakes towards the construction of this wastewater treatment facility, that it is fully committed to and aggressively pursuing construction of the necessary on-site treatment capacity. EPA is convinced that Great Lakes is making a good-faith effort to construct a treatment unit that will treat the K117, K118, K131, K132, and F039 wastes generated at its El Dorado, Arkansas facility to BDAT standards. EPA believes Great Lakes has provided the necessary documentation to meet the requirements of this demonstration.

Section 268.5(a)(3). Due to circumstances beyond the applicant's control, such alternative capacity cannot reasonably be made available by the applicable effective date. This demonstration may include a showing that the technical and practical difficulties associated with providing the alternative capacity will result in the capacity not being available by the applicable effective date.

Great Lakes initiated a no-migration petition, under 40 CFR 268.6, for its existing injection wells in 1988. Despite extensive modeling and surveying, and considerable discussion by Great Lakes with EPA, unresolved issues have delayed final action on the no-migration petition. Finally, in 1993, Great Lakes concluded that its no-migration petition would not be granted prior to the impending land disposal restrictions effective date.

Concurrently, Great Lakes had been evaluating various treatment technologies, including steam stripping, carbon adsorption, biological degradation, catalytic destruction, and membrane separation to treat their wastes. In fact, a previous case-by-case extension application by Great Lakes, submitted prior and rendered moot by EPA's issuance of a national capacity variance, was based on the proposed installation of a steam stripper. Subsequently, for various reasons, Great Lakes determined that steam stripping was not as feasible a treatment alternative as initially thought. Great Lakes' inability to get approval for its no-migration petition coupled with the difficulties encountered in identifying a feasible treatment process caused Great Lakes to accelerate further its research into a treatment process that would achieve BDAT. The system being proposed by Great Lakes, i.e., an ozonation treatment system supplemented with air stripping and an activated carbon adsorption system, was determined by Great Lakes to be the appropriate technology to achieve applicable BDAT treatment standards.

Based on the above, EPA believes that Great Lakes has made a good-faith effort to provide treatment capacity by the effective date. Great Lakes has aggressively pursued the development of technology capable of treating their wastes to BDAT standards. EPA believes Great Lakes has acted in good faith to provide the necessary treatment capacity but that such capacity could not reasonably be made available by June 30, 1994, the effective date of the land disposal restriction for these wastes. As such, EPA believes this demonstration of non-availability of capacity, due to circumstances beyond the applicant's control, is adequate for the purposes of § 268.5(a)(3).

Section 268.5(a)(4). The capacity being constructed or otherwise provided by the applicant will be sufficient to manage the entire quantity of waste that is the subject of the application.

Great Lakes, in its application, states that the treatment system to be constructed will have sufficient capacity to adequately treat the leachate wastestreams generated by the El Dorado, Arkansas facility. The air stripping/ozonation/carbon adsorption system to be constructed at Great Lakes' El Dorado, Arkansas facility has a design capacity of 28,800 gallons per day (20 gallons per minute) and thus has adequate capacity to treat the leachates, generated at a rate of up to 10 gallons/minute, prior to it being managed by underground injection. As such, the planned treatment system is expected to have sufficient treatment capacity. EPA believes that Great Lakes has adequately demonstrated that the treatment unit to be constructed will provide the necessary treatment capacity to ensure that the entire quantity of these leachates for which Great Lakes is requesting a case-by-case extension will meet applicable BDAT standards.

Section 268.5(a)(5). The applicant provides a detailed schedule for obtaining operating and construction permits or an outline of how and when alternative capacity will be available.

Great Lakes has provided EPA with a detailed schedule for the construction and permitting of the treatment system to be constructed at its El Dorado, Arkansas facility. Although Great Lakes had planned to begin construction of the treatment system in March 1994, final approval of required State permits still is pending. Great Lakes expects that construction of the treatment system will take 121 days from when ADPCE approves construction and that within 210 days of beginning construction, the treatment system will begin normal operation. EPA believes that Great Lakes has provided the necessary construction and permitting milestones for bringing its treatment system on-line and therefore meets the requirements of this demonstration.

Section 268.5(a)(6). The applicant has arranged for adequate capacity to manage its waste during an extension, and has documented the location of all sites at which the waste will be managed.

Great Lakes will continue to inject these wastes into the on-site Class I wells it has been using for this purpose. Great Lakes has indicated that these wells will have the necessary capacity available to manage these wastes during the extension, if approved. To provide even more assurance of adequate capacity, Great Lakes is pursuing a process wastewater minimization program to reduce the load on the PWTP and thus the quantity of waste needing underground injection. Two new Class I wells in a different and deeper geological formation (the Hosston Formation) are also planned. EPA believes that this documentation satisfies § 268.5(a)(6).

Section 268.5(a)(7). Any waste managed in a surface impoundment or landfill during the extension period will meet the requirements of 40 CFR 268.5(h)(2).

The subject wastes are hard-piped directly to the on-site Class I injection wells. As such, Great Lakes will not be using any surface impoundments or landfills to manage this waste during the extension period.

II. Consultation With State

In accordance with 40 CFR 268.5(e), EPA consulted with the State of Arkansas (Arkansas Department of Pollution Control and Ecology) to determine if the State had any permitting, enforcement, or other concerns regarding this respective facility that EPA should take into consideration in deciding to grant or deny Great Lakes' application for a case-by-case extension of the LDR effective date. No such concerns were identified by the State of Arkansas.

III. EPA's Proposed Action

For the reasons discussed above, EPA believes that Great Lakes has made and is continuing to make a good-faith effort towards providing sufficient and appropriate treatment capacity for the K117, K118, K131, K132, and F039 wastes that are the subject of its case-by-case application. Therefore, EPA is proposing to grant an extension, until no later than June 30, 1995, of the land disposal restrictions effective date for these wastes generated at the El Dorado, Arkansas facility. If the extension is granted, these wastes could continue to be managed in the manner that they are currently handled until no later than June 30, 1995 (unless the extension is renewed for up to one additional year, in which case the extension would expire no later than June 30, 1996), while the proposed treatment system is being constructed.

Great Lakes applied for an extention of the LDR effective date until June 30, 1995. Depending on the time needed to permit and start-up the system, a full one-year period may not be needed. It is possible that Great Lakes will complete process shakedown and also receive the permits necessary to put the treatment system into routine operation in less time. EPA is proposing to grant a case-by-case extension of the LDR effective date for the K117, K118, K131, K132, and F039 wastes generated at Great Lakes' El Dorado, Arkansas facility for a period of up to June 30, 1995. Nonetheless, EPA shares Great Lakes' desire to have the treatment system become fully operational as soon as possible. As such, EPA is proposing to grant the extension with the understanding that Great Lakes would put the treatment system into routine operation as soon as feasible. The extension would expire at such time the treatment system becomes fully operational and permitted. Under any circumstances, this proposed case-by-case extension would expire no later than June 30, 1995.

After an applicant has been granted a case-by-case extension, he must immediately notify EPA of any change in the demonstrations made in the petition (40 CFR 268.5(f)). He must also submit progress reports at specified intervals that describe the progress being made towards obtaining adequate alternative capacity, identify any delay or possible delay in developing the capacity, and describe the mitigating actions being taken in response to the event (40 CFR 268.5(g)). EPA is proposing that Great Lakes submit monthly progress reports.

EPA seeks public comment regarding the appropriateness of the approach in which the extension is approved with the understanding that Great Lakes will bring the proposed treatment system on-line as soon as feasible, as would be evidenced in the proposed monthly progress reports.

The extension, if approved, will require that the facility make a good-faith effort to meet the schedule for completion. Should the facility not make a good faith effort, or should the Agency (or State) deny or revoke any required permit, conditions certified in the application change, or should the facility violates any law or regulations implemented by EPA, the Agency will consider taking action to terminate the extension. (Sections 1006, 2002(a), 3001, and 3004 of the Solid Waste Disposal Act, as amended by the Resource Conservation and Recovery Act of 1976, as amended (42 U.S.C. 6905, 6912(a), 6921, and 6924)).

Dated: July 28, 1994.

Peter Robertson,

Acting Assistant Administrator, Office of Solid Waste and Emergency Response.

[FR Doc. 94–19890 Filed 8–12–94; 8:45 am]

BILLING CODE 6560–50–P

Notices

Federal Register
Vol. 59, No. 156
Monday, August 15, 1994

This section of the FEDERAL REGISTER contains documents other than rules or proposed rules that are applicable to the public. Notices of hearings and investigations, committee meetings, agency decisions and rulings, delegations of authority, filing of petitions and applications and agency statements of organization and functions are examples of documents appearing in this section.

DEPARTMENT OF COMMERCE

Agency Forms Under Review by the Office of Management and Budget

DOC has submitted to the Office of Management and Budget for clearance the following proposals for collection of information under the provisions of the Paperwork Reduction Act (44 U.S.C. Chapter 35).

Agency: Bureau of Export Administration (BXA).

Title: General License G-Temp: Special Requirements.

Agency Form Number: None but requirement is found at Section 771.22(b)(8)(ii) and (d)(4) of the Export Administration Regulations.

OMB Approval Number: 0694–0029.

Type of Request: Extension of the expiration date of a currently approved collection.

Burden: 3 hours.

Number of Respondents: 8.

Avg. Hours Per Response: 25 minutes.

Needs and Uses: News media personnel, who can take sophisticated equipment and software to any destination, are required to provide a packing list when they are traveling to certain destinations. This information is used to spot check to assure that the G–TEMP is being used properly. Also, a G–TEMP exporter must send BXA an explanatory letter if commodities shipped must be detained abroad beyond the 12 month limit. The information is used to determine whether or not an extension should be granted.

Affected Public: Businesses or other for–profit institutions, small businesses or organizations.

Frequency: On occasion.

Respondent's Obligation: Required to obtain or retain a benefit.

OMB Desk Officer: Don Arbuckle, (202) 395–7340, Room 10202, New Executive Office Building, Washington, D.C. 20503.

Agency: Bureau of Export Administration (BXA).

Title: Report of Commodities Returned After Temporary Export to Formerly COCOM Proscribed Countries.

Agency Form Number: None but requirement is found at Section 772.8(c)(2) of the Export Administration Regulations.

OMB Approval Number: 0694–0030.

Type of Request: Extension of the expiration date of a currently approved collection.

Burden: 52 hours.

Number of Respondents: 100.

Avg. Hours Per Response: 30 minutes for reporting requirement and 2 minutes for recordkeeping.

Needs and Uses: There are times when exporters want to export an item on a temporary basis in order to display, demonstrate, or use for testing purposes. Although the Export Administration Regulations contain a provision for a General License G–TEMP, not all items qualify for this license. When a general license cannot be used, an exporter must apply for a validated license. When items are returned under the license, certain information must be reported to BXA. This information is used by BXA to ensure that temporarily exported commodities are not diverted for improper uses.

Affected Public: Businesses or other for–profit institutions, small businesses or organizations.

Frequency: On occasion and recordkeeping.

Respondent's Obligation: Required to obtain or retain a benefit.

OMB Desk Officer: Don Arubuckle, (202) 395–7340, Room 10202, New Executive Office Building, Washington, D.C. 20503.

Agency: Bureau of Export Administration (BXA).

Title: Application for Duplicate License.

Agency Form Number: None but requirement is found at Section 772.10 of the Export Administration Regulations.

OMB Approval Number: 0694–0031.

Type of Request: Extension of the expiration date of a currently approved collection.

Burden: 42 hours.

Number of Respondents: 156.

Avg. Hours Per Response: 15 minutes for reporting and 1 minute for the recordkeeping requirement.

Needs and Uses: When an export license has been lost or destroyed, exporters can obtain a duplicate license by submitting certain information to BXA. The information provided is used to identify the license so that a duplicate license can be issued.

Affected Public: Businesses or other for–profit institutions, small businesses or organizations.

Frequency: On occasion.

Respondent's Obligation: Required to obtain or retain a benefit.

OMB Desk Officer: Don Arbuckle, (202) 395–7340, Room 10202, New Executive Office Building, Washington, D.C. 20503.

Agency: Bureau of Export Administration (BXA).

Title: Disclosure of Shipment Which Should Have Been Made Under a Validated License.

Agency Form Number: None but requirement can be found at Section 772.7(b) of the Export Administration Regulations.

OMB Approval Number: 0694–0032.

Type of Request: Extension of the expiration date of a currently approved collection.

Burden: 10 hours.

Number of Respondents: 10.

Avg. Hours Per Response: One.

Needs and Uses: On occasion an exporter may discover that a commodity or technical data was shipped without obtaining the required export license. Exporters must report to BXA when the mistake of shipping is discovered before possible prosecution by the government is begun.

Affected Public: Businesses or other for–profit institutions, small businesses or organizations.

Frequency: On occasion.

Respondent's Obligation: Mandatory

OMB Desk Officer: Don Arbuckle, (202) 395–7340, Room 10202, New Executive Office Building, Washington, D.C. 20503.

Agency: Bureau of Export Administration (BXA).

Title: Requests for Special Priorities Assistance.

Agency Form Number: BXA–999 — provision contained within Section 700.50(c) of the Export Administration Regulations.

OMB Approval Number: 0694–0057.

Type of Request: Extension of the expiration date of a currently approved collection.

Burden: 900 hours.

Number of Respondents: 1,800.

Avg. Hours Per Response: 30 minutes.

Needs and Uses: The U.S. must have the capability to rapidly mobilize its resources in the interest of national security and, thus, the Defense Priorities Allocation System (DPAS) was developed. Under DPAS, contractors may request special treatment when placing orders with suppliers to obtain timely delivery of products or materials for national defense, energy, and other emergency programs. However, from time–to–time contractors encounter problems in obtaining needed items. Contractors provide information on BXA Form–999 so that the appropriate federal agency can help resolve it.

Affected Public: Businesses or other for–profit institutions, small businesses or organizations.

Frequency: On occasion.

Respondent's Obligation: Required to obtain or retain a benefit.

OMB Desk Officer: Don Arbuckle, (202) 395–7340, Room 10202, New Executive Office Building, Washington, D.C. 20503.

Agency: International Trade Administration.

Title: Export Assistance Request.

Agency Form Number: ITA–736P.

OMB Approval Number: 0625–0205.

Type of Request: Extension of the expiration date of a currently approved collection.

Burden: 940 hours.

Number of Respondents: 18,800.

Avg. Hours Per Response: 3 minutes.

Needs and Uses: ITA has adopted a management strategy to target export assistance efforts to the infrequent exporter. Program emphasis is placed on specialized counseling adapted to the needs and objects of the clients. Each District Office uses the form as a pre–screening device to help the staff determine the level of assistance needed by walk–in clientele, unsolicited telephone requests for information or assistance, or self–addressed mailers when included in District Office–sponsored trade promotion kits. This information enables the Trade Specialists to act on behalf of the company to either initiate a client relationship or refer the company to an appropriate source.

Affected Public: Businesses or other for–profit institutions, small businesses or organizations.

Frequency: On occasion.

Respondent's Obligation: Voluntary.

OMB Desk Officer: Don Arbuckle, (202) 482–3271, Room 10202, New Executive Office Building, Washington, D.C. 20503.

Agency: National Oceanic and Atmospheric Administration (NOAA).

Title: Foreign Fishing Regulations.

Agency Form Number: None but requirements are found at 50 CFR, Part 611.

OMB Approval Number: 0648–0075.

Type of Request: Extension of the expiration date of a currently approved collection.

Burden: 1,291 hours.

Number of Respondents: 120 with an average of 36 responses per respondent each year.

Avg. Hours Per Response: Varies depending on the requirement but ranges between 6 minutes and 1 hour.

Needs and Uses: NOAA has issued regulations governing foreign fishing within the U.S. exclusive economic zone. While foreign fishing has essentially been eliminated from U.S. waters, there are certain activities that require foreign fishing vessels to report, including radio messages on vessel locations and operations and weekly reports. This information is used by the Coast Guard for enforcement purposes.

Affected Public: Businesses or other for–profit institutions.

Frequency: On occasion, weekly.

Respondent's Obligation: Mandatory.

OMB Desk Officer: Don Arbuckle, (202) 395–7340, Room 10202, New Executive Office Building, Washington, D.C. 20503.

Agency: National Telecommunications and Information Administration (NTIA).

Title: Public Telecommunications Facilities Program Grant Application.

Agency Form Number: None assigned.

OMB Approval Number: 0660-0003.

Type of Request: Revision of a currently approved collection.

Burden: 56,250 hours.

Number of Respondents: 450.

Avg. Hours Per Response: 125.

Needs and Uses: The Public Broadcasting Act authorizes grants to be awarded for the planning and construction of public telecommunications facilities. The information provided through the grant application is used by NTIA to comparatively evaluate the proposed projects and make grant award decisions.

Affected Public: State or local governments, non–profit institutions.

Frequency: Annually.

Respondent's Obligation: Required to obtain or retain a benefit.

OMB Desk Officer: Timothy R. Fain, (202) 395–7231, Room 10202, New Executive Office Building, Washington, D.C. 20503.

Copies of the above information collection proposals can be obtained by calling or writing Gerald Tache, DOC Forms Clearance Officer, (202) 482–3171, Department of Commerce, Room 5327, 14th and Constitution Avenue, N.W., Washington, D.C. 20230.

Written comments and recommendations for the proposed information collections should be sent to the appropriate Desk Officer listed above.

Dated: August 9, 1994.

Gerald Tache,

Departmental Forms Clearance Officer, Office of Management and Organization.

[FR Doc. 94–19931 Filed 8–12–94; 8:45 am]

BILLING CODE 3510–CW–F

International Trade Administration

U.S.-Canada Free-Trade Agreement, Article 1904 Binational Panel Reviews: Decision of the Extraordinary Challenge Committee

AGENCY: NAFTA Secretariat, United States Section, International Trade Administration, Department of Commerce.

ACTION: Notice of Decision of the Extraordinary Challenge Committee respecting Softwood Lumber Products from Canada, Secretariat File No. ECC–94–1904–01USA.

SUMMARY: On August 3, 1994, the Extraordinary Challenge Committee (ECC) in review of the binational panel decision in the panel review of the affirmative countervailing duty determination made by the International Trade Administration, dismissed the request for an extraordinary challenge for failure to meet the standards of an extraordinary challenge set forth in FTA Article 1904.13. The ECC ordered that the Binational Panel's May 6, 1993 and December 17, 1993 Decisions reviewing the International Trade Administration's affirmative countervailing duty determination and redetermination on remand shall remain in effect. The Binational Panel's Order Affirming the Determination on Remand dated February 23, 1994 was affirmed.

FOR FURTHER INFORMATION CONTACT: James R. Holbein, United States Secretary, NAFTA Secretariat, Suite 2061, 14th and Constitution Avenue, Washington, D.C. 20230, (202) 482–5438.

SUPPLEMENTARY INFORMATION: Chapter 19 of the United States-Canada Free-Trade Agreement ("Agreement") establishes a mechanism to replace domestic judicial review of final determinations in antidumping and countervailing duty cases involving imports from the other country with review by independent binational panels. When a Request for Panel Review is filed, a panel is established to

act in place of national courts to review expeditiously the final determination to determine whether it conforms with the antidumping or countervailing duty law of the country that made the determination.

Under Article 1904.13 of the Agreement, where a Party alleges that a binational panel has seriously departed from a fundamental rule of procedure, has manifestly exceeded its powers, authority or jurisdiction or that a member of the panel has materially violated the Code of Conduct established pursuant to Article 1910, and further alleges that any of these actions have materially affected the panel's decision and threaten the integrity of the panel review process, that Party may request that an Extraordinary Challenge Committee be established under the procedure set out in Annex 1904.13 of the Agreement.

Under Annex 1904.13 of the Agreement, the Government of the United States and the Government of Canada established Rules of Procedure for Article 1904 Extraordinary Challenge Committees ("ECC Rules"). These ECC Rules were published in the **Federal Register** on December 30, 1988 (53 FR 53222). These Rules were amended in the **Federal Register** on February 8, 1994 (59 FR 5910). The ECC Rules give effect to the provisions of Chapter Nineteen of the Agreement with respect to Extraordinary Challenge Committee proceedings conducted pursuant to Article 1904 of the Agreement. The ECC Rules are intended to result in decisions typically within 30 days after the establishment of the Extraordinary Challenge Committee. The Extraordinary Challenge Committee proceeding in this matter was conducted in accordance with these ECC Rules.

Background

On April 6, 1994, the United States Trade Representative filed a Request for an Extraordinary Challenge Committee on behalf of the United States Government in its capacity as a Party to the United States-Canada Free-Trade Agreement, with the United States Secretary of the NAFTA Secretariat. Four specific counts were contained in the Request. (1) The U.S. Government alleged that two of the Binational Panelists maintained relationships or engaged in activities creating the appearance of partiality or bias or, in the case of one of the panelists, constituting a serious conflict of interest. Further, contrary to the Binational Panel Rules of Conduct, the two Panelists did not disclose this information before joining the Panel or, in certain instances, as the information came to light during the Panel review; (2) The U.S. Government alleged that the Panel, in its May 6, 1993 determination, manifestly exceeded its power, authority, and jurisdiction by failing to apply the appropriate standard of review and general legal principles that a court of the United States would apply when it ruled that Commerce must determine that the preferential treatment in timber pricing led to an increased output of lumber; (3) In its December 17, 1993 decision analyzing Commerce's determination that provincial stumpage programs in fact benefit a specific industry or group of industries, the Majority manifestly exceeded its power, authority, or jurisdiction by failing to apply the appropriate standard of review and by seriously misapprehending the U.S. substantive law it was required to apply; and (4) Finally, the U.S. Government alleged that for reasons similar to the case of stumpage, the Majority manifestly exceeded its powers, authority, and jurisdiction in its finding concerning whether B.C.'s log expert restriction were "specific" under U.S. countervailing duty law.

ECC Decision

The Extraordinary Challenge Committee issued its Memorandum Opinions and Order on August 3, 1994. Each Committee Member wrote a separate opinion, two affirming the Binational Panel's decisions and one dissenting. The Order dismissed the ECC Request for failure to meet other standards for an extraordinary challenge. The Order also affirmed the Binational Panel's decisions and order Affirming the Determination on remand.

Dated: August 8, 1994.

James R. Holbein,

United States Secretary, NAFTA Secretariat.

[FR Doc. 94–19928 Filed 8–12–94; 8:45 am]

BILLING CODE 3510–GT–M

U.S.-Canada Free-Trade Agreement, Article 1904 Binational Panel Reviews: Completion of Extraordinary Challenge

AGENCY: NAFTA Secretariat, United States Section, International Trade Administration, Department of Commerce.

ACTION: Notice of Completion of the Extraordinary Challenge Committee Review of the binational panel review of the affirmative countervailing duty determination made by the International Trade Administration, respecting Softwood Lumber Products from Canada, Secretariat File No. ECC–94–1904–01USA.

SUMMARY: Pursuant to CFTA Rule 66 of the Rules of Procedure for Article 1904 Extraordinary Challenge Committees, and the Extraordinary Challenge Committee Memorandum Opinions and Order dated August 3, 1994, the Extraordinary Challenge Committee Review of the binational panel review described above was completed effective on August 4, 1994.

FOR FURTHER INFORMATION CONTACT: James R. Holbein, United States Secretary, NAFTA Secretariat, Suite 2061, 14th and Constitution Avenue, Washington, D.C. 20230, (202) 482–5438.

SUPPLEMENTARY INFORMATION: By a decision dated August 3, 1994, the Extraordinary Challenge Committee in Secretariat File No. ECC–94–1904–01USA, dismissed the request for an extraordinary challenge of the Binational Panel's May 6, 1993 and December 17, 1993 Memoranda Opinion and Order for failure to meet the standards of an extraordinary challenge set forth in FTA Article 1904.13. The Committee ordered that the Binational Panel's Memoranda Opinion and Orders shall remain in effect and affirmed the Orders of the Panel dated May 6, 1993, and December 17, 1993 and February 23, 1994. Pursuant to Rules 66 & 67, the Committee members are discharged from their duties effective August 4, 1994, the day after the decision affirming the panel decision.

Dated: August 8, 1994.

James R. Holbein,

United States Secretary NAFTA Secretariat.

[FR Doc. 94–19929 Filed 8–12–94 8:45 am]

BILLING CODE 3510–GT–M

United States-Canada Free-Trade Agreement, Article 1904 Binational Panel Reviews: Completion of Binational Panel Review

AGENCY: NAFTA Secretariat, United States Section, International Trade Administration, Department of Commerce.

ACTION: Notice of Completion of the Binational Panel Review of the affirmative countervailing duty determination made by the International Trade Administration, respecting Softwood Lumber Products from Canada, Secretariat File No. USA–92–1904–01.

SUMMARY: Pursuant to CFTA Rule 81 of the Rules of Procedure for Article 1904, and the Extraordinary Challenge Committee Memorandum Opinion and Order dated August 3, 1994, the Binational Panel Review of the subject

described above was completed on August 4, 1994.

FOR FURTHER INFORMATION CONTACT: James R. Holbein, United States Secretary, NAFTA Secretariat, Suite 2061, 14th and Constitution Avenue, Washington, DC 20230, (202) 482–5438.

SUPPLEMENTARY INFORMATION: By a decision dated August 3, 1994, the Extraordinary Challenge Committee in Secretariat File No. ECC–94–1904–01USA, dismissed the request for an extraordinary challenge of the Binational Panel's May 6, 1993 and December 17, 1993 Memoranda Opinion and Orders for failure to meet the standards of an extraordinary challenge set forth in FTA Article 1904.13. The Committee ordered that the Binational Panel's Memoranda Opinion and Orders shall remain in effect and affirmed the Orders of the Panel dated May 6, 1993, December 17, 1993 and February 23, 1994. Pursuant to Rule 85 of the Rules of Procedure for Article 1904, the Panel members are discharged from their duties effective August 4, 1994, the day after the decision affirming the panel decision.

Dated: August 8, 1994.

James R. Holbein,

United States Secretary, NAFTA Secretariat.

[FR Doc. 94–19969 Filed 8–12–94; 8:45 am]

BILLING CODE 3510–GT–M

Minority Business Development Agency

Business Development Center Applications; State of Alaska

AGENCY: Minority Business Development Agency, Commerce.

ACTION: Cancellation of notice.

SUMMARY: This notice cancels the advertisement as it appeared in the May 17, 1994, issue for the Minority Business Development Agency (MBDA) announcement that it is soliciting competitive applications under its Minority Business Development Center (MBDC) Program to operate an MBDC in the State of Alaska Geographic Service Area.

CLOSING DATE: The closing date for submitting an application was June 24, 1994.

ADDRESSES: San Francisco Regional Office, Minority Business Development Agency, U.S. Department of Commerce, 221 Main Street, Suite 1280, San Francisco, California 94105, 415/744–3001.

FOR FURTHER INFORMATION CONTACT: Steven Saho, Business Development Clerk, San Francisco Regional Office at 415/744–3001.

SUPPLEMENTARY INFORMATION: Questions concerning the preceding information can be obtained by contacting the San Francisco Regional Office.

11.800 Minority Business Development

(Catalog of Federal Domestic Assistance)

Dated: August 9, 1994.

Melda Cabrera,

Regional Director, San Francisco Regional Office.

[FR Doc. 94–19913 Filed 8–12–94; 8:45 am]

BILLING CODE 3510–21–M

Native American Business Development Center Applications: Cherokee

AGENCY: Minority Business Development Agency.

ACTION: Notice.

SUMMARY: In accordance with Executive Order 11625 and 15 U.S.C. 1512, the Minority Business Development Agency (MBDA) is soliciting competitive applications for its Native American Business Development Center (NABDC).

The purpose of the NABDC is to provide integrated business development services to Native American entrepreneurs. The award number of the NABDC will be 04–10–95001–01.

DATES: The closing date for applications is *September 23, 1994.* Applications must be received on or before *September 23, 1994.* Anticipated processing time of this award is 120 days.

ADDRESSES: U.S. Department of Commerce, Minority Business Development Agency, Atlanta Regional Office, 401 W. Peachtree Street, NW., Suite 1715, Atlanta, Georgia 30308–3516.

A pre-application conference will be held on *September 7, 1994 at 9:00 a.m. at the Atlanta Regional Office.*

FOR FURTHER INFORMATION CONTACT: Robert Henderson, Acting Regional Director, at 404/730–3300.

SUPPLEMENTARY INFORMATION: The funding instrument for this project will be a cooperative agreement. Contingent upon the availability of Federal funds, the cost of performance for the first budget period January 1, 1995 to December 1, 1995, is estimated at $197,825. The total Federal amount is $197,825 and is composed of $193,000 plus the Audit Fee amount of $4,825.

Competition is open to individuals, non-profit and for-profit organizations, state and local governments, American Indian tribes and educational institutions. Applications will be evaluated on the following criteria: the experience and capabilities of the firm and its staff in addressing the needs of the business community in general and, specifically, the special needs of Native American businesses, individuals and organizations (45 points), the resources available to the firm in providing business development services (10 points); the firm's approach (techniques and methodologies) to performing the work requirements included in the application (25 points); and the firm's estimated cost for providing such assistance (20 points).

An application must receive at least 70% of the points assigned to each evaluation criteria category to be considered programmatically acceptable and responsive. Those applications determined to be acceptable and responsive will then be evaluated by the Director of MBDA. Final award selections shall be based on the number of points received, the demonstrated responsibility of the applicant, and the determination of those most likely to further the purpose of the MBDA program. Negative audit findings and recommendations and unsatisfactory performance under prior Federal awards may result in an application not being considered for funding. The applicant with the highest point score will not necessarily receive the award.

If an application is selected for funding, MBDA has no obligation to provide any additional future funding in connection with that award. Renewal of an award to increase funding or extend the period of performance is at the total discretion of MBDA.

Executive Order 12372, "Intergovernmental Review of Federal Programs," is not applicable to this program. Federal funds for this project include audit funds for non-CPA recipients. In event that a CPA firm wins the competition, the funds allocated for audits are not applicable. The collection of information requirements for this project have been approved by the Office of Management and Budget (OMB) and assigned OMB control number 0640–0006. Questions concerning the preceding information can be answered by the contact person indicated above, and copies of application kits and applicable regulations can be obtained at the above address.

Pre-Award Activities—Applicants are hereby notified that if they incur any costs prior to an award being made, they do so solely at the risk of not being reimbursed by the Government.

Notwithstanding any verbal assurance that an applicant may have received, there is no obligation on the part of the Department of Commerce to cover pre-award activities.

Recipients and subrecipients are subject to all Federal laws, and Federal and Departmental regulations, policies, and procedures applicable to Federal financial assistance awards.

Delinquient Federal Debts—No award of Federal funds shall be made to an applicant who has an outstanding delinquent Federal debt until either the delinquent account is paid in full, repayment schedule is established and at least one payment is received, or other arrangements satisfactory to the Department of Commerce are made.

Name Check Policy—All non-profit and for-profit applicants are subject to a name check review process. Name checks are intended to reveal if any key individuals associated with the applicant have been convicted of or are presently facing criminal charges such as fraud, theft, perjury or other matters which significantly reflect on the applicant's management honesty or financial integrity.

Award Termination—The Departmental Grants Officer may terminate any cooperative agreement in whole or in part at any time before the date of completion whenever it is determined that the award recipient has failed to comply with the conditions of the cooperative agreement. Examples of some of the conditions which can cause termination are failure to meet cost-sharing requirements; unsatisfactory performance of the NABDC work requirements; and reporting inaccurate or inflated claims of client assistance. Such inaccurate or inflated claims may be deemed illegal an punishable by law.

False Statements—A false statement on an application for Federal financial assistance is grounds for denial or termination of funds, and grounds for possible punishment by a fine or imprisonment as provided in 18 U.S.C. 1001.

Primary Applicant Certifications—All primary applicants must submit a competed Form CD–511, "Certifications Regarding Debarment, Suspension and Other Responsibility Matters; Drug-Free Workplace Requirements and Lobbying."

Nonprocurement Debarment and Suspension—Prospective participants (as defined at 15 CFR Part 26, Section 105) are subject to 15 CFR Part 26, "Nonprocurement Debarment and Suspension" and the related section of the certification form prescribed above applies.

Drug-Free Workplace—Grantees (as defined at 15 CFR Part 26, Section 605) are subject to 15 CFR Part 26, Subpart F, "Governmentwide Requirements for Drug-Free Workplace (Grants)" and the related section of the certification form prescribed above applies.

Anti-Lobbying—Persons (as defined at 15 CFR Part 28, Section 105) are subject to the lobbying provisions of 31 U.S.C. 1352, "Limitation on use of appropriated funds to influence certain Federal contracting and financial transactions," and the lobbying section of the certification form prescribed above applies to applications/bids for grants, cooperative agreements, and contracts for more than $100,000, and loans and loan guarantees for more than $150,000, or the single family maximum mortgage limit for affected programs, whichever is greater.

Anti-Lobbying Disclosures—Any applicant that has paid or will pay for lobbying using any funds must submit an SF–LLL, "Disclosure of Lobbying Activities," as required under 15 CFR Part 28, Appendix B.

Lower Tier Certifications—Recipients shall require applications/bidders for subgrants, contracts, subcontracts, or other lower tier covered transactions at any tier under the award to submit, if applicable, a completed Form CD–512, "Certifications Regarding Debarment, Suspension, Ineligibility and Voluntary Exclusion-Lower Tier Covered Transactions and Lobbying" and disclosure form, SF–LLL, "Disclosure of Lobbying Activities." Form CD–512 is intended for the use of recipients and should not be transmitted to DOC. SF–LLL submitted by any tier recipient or subrecipient should be submitted to DOC in accordance with the instructions contained in the award document.

Indirect Costs—The total dollar amount of the indirect costs proposed in an application under this program must not exceed the indirect cost rate negotiated and approved by a cognizant Federal agency prior to the proposed effective date of the award or 100% of the total proposed direct costs dollar amount in the application, whichever is less.

Buy American-Made Equipment or Products—Applicants are hereby notified that they are encouraged, to the extent feasible, to purchase American-made equipment and products with funding provided under this program in accordance with Congressional intent as set forth in the resolution contained in Public Law 103–121, Sections 606 (a) and (b).

11.801 Native American Program

(Catalog of Federal Domestic Assistance)

Dated: August 9, 1994.

Mel A. Jackson,

Federal Register Liaison Officer, Minority Business Development Agency.

[FR Doc. 94–19847 Filed 8–12–94; 8:45 am]

BILLING CODE 3510–21P–M

National Oceanic and Atmospheric Administration

[I.D. 080294A]

Marine Mammals

AGENCY: National Marine Fisheries Service (NMFS), National Oceanic and Atmospheric Administration (NOAA), Commerce.

ACTION: Receipt of application to modify permit no. 835 (P250D).

SUMMARY: Notice is hereby given that the Washington Department of Wildlife, Marine Mammal Institute, 7801 Phillips Road, SW., Tacoma, WA 98498, the National Marine Fisheries Service, National Marine Mammal Laboratory, 7600 Sand Point Way, NE., BIN C15700 Building 1, Seattle, WA 98115–0070, and the Oregon Department of Fish and Wildlife, Marine Region, Marine Science Drive, Building 3, Newport, OR 97365, have requested a modification to permit No. 835.

ADDRESSES: The modification request and related documents are available for review upon written request or by appointment in the following offices:

Permits Division, Office of Protected Resources, NMFS, 1315 East-West Highway, Room 13130, Silver Spring, MD 20910 (301/713–2289);

Director, Alaska Region, NMFS, P.O. Box 21668, Juneau, AK 99802–1668 (907/586–7221); and

Director, Northwest Region, NMFS, NOAA, 7600 Sand Point Way, NE., BIN C15700, Seattle, WA 98115 (206/526–6150).

Written data or views, or requests for a public hearing on this request should be submitted to the Director, Office of Protected Resources, NMFS, NOAA, U.S. Department of Commerce, 1315 East-West Highway, Room 13130, Silver Spring, MD 20910, within 30 days of the publication of this notice. Those individuals requesting a hearing should set forth the specific reasons why a hearing on this particular modification request would be appropriate.

Concurrent with the publication of this notice in the **Federal Register**, the Secretary of Commerce is forwarding copies of this application to the Marine Mammal Commission and its Committee of Scientific Advisors.

SUPPLEMENTARY INFORMATION: The subject modification to permit No. 835, issued on April 27, 1993 (58 FR 26288), is requested under the authority of the Marine Mammal Protection Act of 1972, as amended (16 U.S.C. 1361 *et seq.*) the Regulations Governing the Taking and Importing of Marine Mammals (50 CFR part 216), the Endangered Species Act of 1973, as amended (16 U.S.C. 1531 *et seq.*), and the regulations governing the taking, importing, and exporting of endangered fish and wildlife (50 CFR part 222).

Permit No. 835 authorizes the permit holder for the inadvertent harassment of harbor seals (*Phoca vitulina*), California sea lions (*Zalophus californianus*), Steller sea lions (*Eumetopias jubatus*), and elephant seals (*Mirounga angustirostris*) incidental to the conduct of aerial, ground, and boat surveys. The holders are also authorized to capture, mark, tag, brand, and sample harbor seals.

The permit holders now seek authorization to mark and tag up to 50 male California sea lions annually, and to capture, mark, brand, tag, and release up to 150 male California sea lions annually, of which up to 50 would be instrumented with radio/satellite tags or time-depth recorders (TDRs). The applicants estimate that up to 1,000 additional sea lions may be disturbed annually, incidental to the proposed activities.

Dated: August 8, 1994.

William W. Fox, Jr.,

Director, Office of Protected Resources, National Marine Fisheries Service.

[FR Doc. 94–19856 Filed 8–12–94; 8:45 am]

BILLING CODE 3510–22–F

Office of Global Programs; Committee on Environment and Natural Resources Private Enterprise-Government Interactions (PEGI) Task Group; Meeting

AGENCY: Office of Global Programs, NOAA, Commerce.

ACTION: Notice of second annual PEGI roundtable conference on private sector-government interactions entitled "Avoidance Technologies: Environmentally Conscious Engineering".

SUMMARY: Pursuant to the Federal Advisory Committee Act, the Committee on Environment and Natural Resources, Private Sector-Government Interactions Task group, announces a conference.

On September 7 and 8, 1994, the conference will focus on potential technology transfer collaborations involving environmental technologies. Sessions will be held addressing "Liquid Contamination from Mining", "Energy Efficiency and Waste Minimization", "Green Technologies for Pest Control", "Water Conservation", and "Monitoring and Reducing Exposures to Hazardous Substances—New Approaches and Emerging Technologies". On September 9, 1994, a separate discussion will provide an opportunity for public input to a series of environmental technology strategy papers.

The executive directors, managers, and other officials of private sector alliances, consortia, coalitions, or other groups representing sections of the private sector are among those who may be interested in participation.

DATES: The Conference will be held September 7–9, 1994. Registration for the Conference is due by August 26, 1994.

ADDRESSES: The Conference will be held at the Ramada Renaissance Hotel, 13869 Park Center Road, Herndon, Virginia.

Registration forms may be obtained from and returned to: Ms. Linda Greczy, USDA, Global Change Program Office, 1621 N. Kent Street, Room 60LL, Arlington, Virginia 22209, TEL: (703) 235–9018 or FAX: (703) 235–9046.

FOR FURTHER INFORMATION CONTACT: Ms. Linda Greczy, 703–235–9018.

Dated: August 9, 1994.

J. Michael Hall,

Director, NOAA, Office of Global Programs.

[FR Doc. 94–19930 Filed 8–12–94; 8:45 am]

BILLING CODE 3510–12–M

DEPARTMENT OF DEFENSE

Department of the Army

Notice of Delegation of Authority to Transmit the Annual Report to Congress on the Status of the Harbor Maintenance Trust Fund

AGENCY: U.S. Army Corps of Engineers, DOD.

ACTION: Notice.

SUMMARY: This notice is to inform the general public that the President of the United States has delegated the authority to transmit to the appropriate Chairmen of the House and Senate Committees, beginning with the fiscal year 1993 report, the Annual Report to Congress on the status of the Harbor Maintenance Trust Fund.

ADDRESSES: Office of the Chief of Engineers, ATTN: CECW–AA, 20 Massachusetts Ave., NW., Washington, DC. 20314–1000.

FOR FURTHER INFORMATION CONTACT: Mr. DuWayne A. Koch, Office of Policy, (202) 272–0120, FAX (202) 272–8839.

SUPPLEMENTARY INFORMATION: The Harbor Maintenance Fee was authorized under Sections 1401 and 1402 of the Water Resources Development Act of 1986, Public Law 99–662. This law imposed a 0.04 percent fee on the value of commercial cargo loaded (exports and domestic cargo) or unloaded (imports) at ports which have had Federal expenditures made on their behalf by the US. Army Corps of Engineers since 1977. Section 11214 of the Omnibus Budget Reconciliation Act of 1990, Public Law 101–580, increased the Harbor Maintenance Fee to 0.125 percent, which went into effect on January 1, 1991. Harbor Maintenance Trust Fund monies are used to recover up to 100 percent of the Corps eligible Operation and Maintenance expenditures for the maintenance of commercial harbors and channels.

Section 330 of the Omnibus Budget Reconciliation Act of 1992, Public Law 102–580, requires that the President provide an Annual Report to Congress on the Status of the Trust Fund. The release of this report is in compliance with this legislation. This notice informs the public that the President has delegated this authority to the Secretary of Defense. The public is further notified that the Secretary of Defense has delegated this authority to the Secretary of the Army, and it is the intention of the Secretary to further delegate this to the Assistant Secretary of the Army (Civil Works) upon the appointment and confirmation of said Assistant Secretary.

Kenneth L. Denton,

Army Federal Register Liaison Officer.

[FR Doc. 94–19836 Filed 8–12–94; 8:45 am]

BILLING CODE 8710–92–M

Notice of Availability of the Second Annual Report to Congress on the Status of the Harbor Maintenance Trust Fund

AGENCY: U.S. Army Corps of Engineers, DOD.

ACTION: Notice.

SUMMARY: This notice is to inform the general public of the availability of the "Second Annual Report to Congress on the Status of the Harbor Maintenance Trust Fund for Fiscal Year 1993." Single copies of the report may be obtained free of charge.

ADDRESSES: Chief of Engineers, ATTN: CECW–AA, 20 Massachusetts Avenue NW., Washington, D.C. 20314–1000.

FOR FURTHER INFORMATION CONTACT: Mr. DuWayne A. Lock, (202) 272–0120.

SUPPLEMENTARY INFORMATION: The Harbor Maintenance Fee was authorized under Sections 1401 and 1402 of the Water Resources Development Act of 1986, Public Law 99–662. This law imposed a 0.04 percent fee on the value of commercial cargo loaded (exports and domestic cargo) or unloaded (imports) at ports which have had Federal expenditures made on their behalf by the U.S. Army Corps of Engineers since 1977. Section 11214 of the Omnibus Budget Reconciliation Act of 1990, Public Law 101–580, increased the Harbor Maintenance Fee to 0.125 percent, which went into effect on January 1, 1991. Harbor Maintenance Trust Fund monies are used to recover up to 100 percent of the Corps eligible Operation and Maintenance expenditures for the maintenance of commercial harbors and channels.

Section 330 of the Omnibus Budget Reconciliation Act of 1992, Public Law 102–580, requires that the President provide an Annual Report to Congress on the Status of the Trust Funds. The release of this report is in compliance with this legislation.

Kenneth L. Denton,

Army Federal Register Liaison Officer.

[FR Doc. 94–19835 Filed 8–12–94; 8:45 am]

BILLING CODE 3710–92–M

DEPARTMENT OF ENERGY

Kansas City Support Office; Non-Competitive Financial Assistance Award to the American Council for an Energy Efficient Economy

AGENCY: Department of Energy.

ACTION: Notice of Noncompetitive Financial Assistance Award.

SUMMARY: The Department of Energy (DOE), Kansas City Support Office, announces, pursuant to the DOE Financial Assistance Rules 10 CFR 600.7(b)(2)(i)(B), DOE intends to make a noncompetitive financial assistance award to the American Council for An Energy Efficient Economy (ACEEE), to expand activities initiated through a cooperative agreement between ACEEE and the DOE that will investigate options for stimulating the use of more efficient electric motor systems and influencing the development and marketing of more efficient motor-driven equipment.

PROJECT PERIOD: The project period for this award is one year and is expected to begin September 1994. DOE plans to provide additional funding to this Cooperative Agreement in the amount of approximately $70,000, bringing the total of funds authorized for this project to $96,510.

FOR FURTHER INFORMATION CONTACT: Chris Cockrill, Technology Marketing Division, or JoAnn Timm, Contracting Officer, U.S. Department of Energy, Kansas City Support Office, 911 Walnut Street, Kansas City, MO 64106–2024. (816) 426–4772.

SUPPLEMENTARY INFORMATION: The proposed project meets the criterion for noncompetitive financing assistance specified in 10 CFR 600.7(b)(2)(i)(B) in that the activities are being or would be conducted by the applicant using its own resources or those provided by third parties. This award will further the objectives of the DOE, Industrial Electric Motor Systems Program to promote the use of efficient electric motor systems. The application is being accepted because DOE knows of no other opportunity to conduct such a project by any other organization or entity.

Issued in Golden, Colorado on August 4, 1994.

John W. Meeker,

Chief, Procurement Team, GO.

[FR Doc. 94–19918 Filed 8–12–94; 8:45 am]

BILLING CODE 6450–01–M

Pittsburgh Energy Technology Center; Non-Competitive Financial Assistance Award

AGENCY: U.S. Department of Energy, Bartlesville Project Office and Pittsburgh Energy Technology Center.

ACTION: Notice of Non-Competitive Financial Assistance (Grant) Award with the American Geological Institute.

SUMMARY: The Department of Energy (DOE), Bartlesville Project Office announces that pursuant to 10 CFR 600.7(b)(2)(i) criteria (B), it intends to make a Non-Competitive Financial Assistance (Grant) Award through the Pittsburgh Energy Technology Center to the American Geological Institute to conduct the second phase of work leading to a National Geoscience data repository, including development of organizational and operational requirements and conducting pilot trails of the transfer mechanisms that will be critical to the future operation of the repository system.

ADDRESSES: U.S. Department of Energy, Pittsburgh Energy Technology Center, Acquisition and Assistance Division, P.O. Box 10940, MS 921–143, Pittsburgh, PA 15236–0940.

FOR FURTHER INFORMATION CONTACT: John R. Columbia, Contract Specialist, (412) 892–6219.

SUPPLEMENTARY INFORMATION: Grant No.: DE–FC22–94BC14833.

Title of Effort: "National Geoscience Data Repository System, Phase 2."

Awardee: American Geological Institute.

Term of Assistance Effort: Eighteen (18) months.

Cost of Assistance Effort: A Total Estimated Value of $1,861,000, with DOE estimated funding of $1,211,000.

Objective

Based upon the authority of 10 CFR 600.7(b)(2)(i) criteria (B), the objective of this Grant is to permit the American Geological Institute to conduct Phase 2 based on the findings of Phase 1. The feasibility study (Phase 1) determined that: (1) A tremendous volume of irreplaceable subsurface geoscience data is at risk of destruction as the major oil companies move offshore, (2) this data is of great value to the smaller companies that have taken over exploration and drilling activities in the U.S., and (3) the existing repositories must work to maintain this data and make it easily accessible to the user community. The need for additional effort after the first phase was discussed at meetings of the AGI steering committee and was a recommendation of the final report of the Phase 1 study

Dated: August 2, 1994.

Dale A. Siciliano,

Contracting Officer.

[FR Doc. 94–19920 Filed 8–12–94; 8:45 am]

BILLING CODE 6450–01–M

Kansas City Support Office Noncompetitive Financial Assistance Award to Iowa Department of Natural Resources

AGENCY: U.S. Department of Energy.

ACTION: Notice of Noncompetitive Financial Assistance Award.

SUMMARY: The U.S. Department of Energy (DOE), Kansas City Support Office announces that, pursuant to the DOE Financial Assistance Rules 10 CFR 600.7(b)(2), DOE intends to make a noncompetitive financial assistance award to Iowa Department of Natural Resources, for administration of an energy management program in several General Service Administration (GSA) facilities in the state of Iowa.

PROJECT PERIOD: The project shall be completed on/or before March 31, 1995 and is expected to begin August, 1994. Total funding for this project is expected to be approximately $68,215.

FOR FURTHER INFORMATION CONTACT: Kirk M. Bond, Program Engineer, (816) 426–7054 or JoAnn Timm, Contracting officer, (816) 426–3116 at U.S. Department of Energy, Kansas City Regional Support Office, 911 Walnut St., Suite 1411, Kansas City, MO 64106–2024 FAX: (816) 426-6860.

SUPPLEMENTARY INFORMATION: Iowa Department of Natural Resources, Energy Bureau will: (1) Analyze utility usages of GSA buildings in Iowa, (2) administer the request for proposal process for Energy Audits (EAs) of said buildings, (3) negotiate and consummate a contract(s) with the successful firm(s) to do the EAs, (4) manage contractor(s) performance and interface with GSA, (5) certify technical completeness of the EAs, and (6) develop a Management Plan based on the completed EAs. This is a pilot project to test the procedures for state agencies to administer the process of obtaining Energy Audits of and develop management plans for federal buildings. It is targeted at facilities owned by General Service Administration and located in Iowa. The pilot test is based on replicating the functions provided under a program, unique to the Iowa Department of Natural Resources, that offers such services for state, municipal and institutional buildings. If the pilot test establishes the viability of this approach, the mechanism used can be extended to other states, both in this region and beyond.

Issued in Golden, Colorado on: August 8, 1994.

John W. Meeker,

Chief, Procurement Team, CO

[FR Doc. 94–19919 Filed 8–12–94; 8:45 am]

BILLING CODE 6450–01–M

Energy Information Administration

Form EIA–895, "Monthly Quantity and Value of Natural Gas Report"

AGENCY: Energy Information Administration, Department of Energy.

ACTION: Notice of the Proposed new Form EIA–895, "Monthly Quantity and Value of Natural Gas Report" and Solicitation of Comments.

SUMMARY: The Energy Information Administration (EIA), as part of its continuing effort to reduce paperwork and respondent burden (required by the Paperwork Reduction Act of 1980, Pub. L. No. 96–511, 44 U.S.C. 3501 et seq.), conducts a presurvey consultation program to provide the general public and other Federal agencies with an opportunity to comment on proposed and/or continuing reporting forms. This program helps to ensure that requested data can be provided in the desired format, reporting burden is minimized, reporting forms are clearly understood, and the impact of collection requirements on respondents can be properly assessed. Currently, EIA is soliciting comments concerning the proposed new Form EIA–895, "Monthly Quantity and Value of Natural Gas Report."

DATES: Written comments must be submitted by September 14, 1994. If you anticipate that you will be submitting comments, but find it difficult to do so within the period of time allowed by this notice, you should advise the contact listed below of your intention to do so as soon as possible.

ADDRESSES: Send comments to Margo Natof, Office of Oil and Gas, Reserves and Natural Gas Division, EI–441, Forrestal Building, U.S. Department of Energy, Washington, D.C. 20585, (telephone 202–586–6303).

FOR FURTHER INFORMATION: Requests for additional information or copies of the form and instructions should be directed to Margo Natof at the address listed above.

SUPPLEMENTARY INFORMATION:

I. Background
II. Current Actions
III. Request for Comments

I. Background

In order to fulfill its responsibilities under the Federal Energy Administration Act of 1974 (Pub. L. No. 93–275) and the Department of Energy Organization Act (Pub. L. No. 95–91), the Energy Information Administration is obliged to carry out a central, comprehensive, and unified energy data and information program. As part of this program, EIA collects, evaluates, assembles, analyzes, and disseminates data and information related to energy resource reserves, production, demand, and technology, and related economic and statistical information relevant to the adequacy of energy resources to meet demands in the near and longer term future for the Nation's economic and social needs.

The EIA–895 will collect data on volumes of natural gas produced and volumes of gas used for repressuring, on leases for fuel, of nonhydrocarbon gases removed, and vented and flared. These monthly data are similar to the annual data collected on Form-EIA–627, Annual Quantity and Value of Natural Gas Report," but do not include prices. The data are collected by the States for taxation and statistical purposes. The States will be requested to provide EIA with aggregated monthly information need to provide details on the amount of natural gas used in producing the gas available for marketing. These data were previously collected by the Interstate Oil and Gas Compact Commission (OGCC) which shared the data with EIA. The data will be published in the Natural Gas Monthly, Natural Gas Annual, Monthly Energy Review, Annual Energy Review.

II. Current Actions

Early this Fall, we plan to request OMB approval of this new collection through December 31, 1997.

III. Request for Comments

Prospective respondents and other interested parties should comment on the actions discussed in item II. The following general guidelines are provided to assist in the preparation of responses.

As a potential respondent:

A. Are the instructions and definitions clear and sufficient? If not, which instructions require clarification?

B. Can the data be submitted using the definitions included in the instructions?

C. Can data be submitted in accordance with the response time specified in the instructions?

D. Public reporting burden for this collection is estimated to average .5 hours per response. How much time, (including time for reviewing instructions, searching existing data sources, gathering and maintaining the data needed, and completing and reviewing the collection of information), do you estimate it will require you to complete and submit the required form?

E. What is the estimated cost of completing this form, including the direct and indirect costs associated with the data collection? Direct costs should include all costs, such as administrative costs, directly attributable to providing this information.

F. How can the form be improved?

G. Do you know of any other Federal, State, or local agency that collects similar data? If you do, specify the agency, the data element(s), and the means of collection.

As a potential user:

A. Can you use data at the levels of detail indicated on the form?

B. For what purpose would you use the data? Be specific.

C. How could the form be improved to better meet your specific needs?

D. Are there alternate sources of data and do you use them? What are their deficiencies and/or strengths?

E. For the most part, information is published by EIA in U.S. customary units, e.g., cubic feet of natural gas, short tons of coal, and barrels of oil.

Would you prefer to see EIA publish more information in metric units, e.g., cubic meters, metric tons, and kilograms? If yes, please specify what information (e.g., coal production, natural gas consumption, and crude oil imports), the metric unit(s) of measurement preferred, and in which EIA publication(s) you would like to see such information.

EIA is also interested in receiving comments from persons regarding their views on the need for the information contained in the Form EIA–895, "Monthly Quantity and Value of Natural Gas Report."

Comments submitted in response to this notice will be summarized and/or included in the request for OMB approval of the form; they also will become a matter of public record.

Statutory Authorities: Section 2(a) of the Paperwork Reduction Act of 1980 (Pub. L. No. 96–511), which amended Chapter 35 of Title 44 of the United States Code [See 44 U.S.C. § 3506(a) and (c)(1)].

Issued in Washington, DC August 5, 1994.

Yvonne M. Bishop,

Director, Office of Statistical Standards, Energy Information Administration.

[FR Doc. 94–19923 Filed 8–12–94; 8:45 am]

BILLING CODE 6450–01–P

Federal Energy Regulatory Commission

[Docket No. CP94–696–000, et al.]

Koch Gateway Pipeline Company, et al.; Natural Gas Certificate Filings

August 5, 1994.

Take notice that the following filings have been made with the Commission:

1. Koch Gateway Pipeline Company

[Docket No. CP94–696–000]

Take notice that on August 2, 1994, Koch Gateway Pipeline Company (Koch Gateway), P. O. Box 1478, Houston, Texas 77251–1478, filed in Docket No. CP94–696–000 a request pursuant to Sections 157.205 and 157.211 of the Commission's Regulations under the Natural Gas Act (18 CFR 157.205, 157.211) for authorization to construct and operate a delivery tap and meter station under Koch Gateway's blanket certificate issued in Docket No. CP82–430–000 pursuant to Section 7 of the Natural Gas Act, all as more fully set forth in the request that is on file with the Commission and open to public inspection.

Koch Gateway proposes to construct and operate a two-inch tap and meter station located on its Index 130 line in Tangipahoa Parish, Louisiana. Koch Gateway states that the proposed tap would provide an interconnect through which Koch Gas Services (KGS) and Clarkco Contractors, Inc. (Clarkco) would serve Mid-American Dairy Association approximately 734 MMBtu on an average day and 1,048 MMBtu on a peak day. Koch Gateway also states that it would be reimbursed for the $32,395 installation cost by Clarkco. Koch Gateway asserts that the proposed interruptible service would not cause it to exceed its current certificated level of service for KGS.

Comment date: September 19, 1994, in accordance with Standard Paragraph G at the end of this notice.

2. Kern River Gas Transmission Company

[Docket No. CP94–699–000]

Take notice that on August 3, 1994, Kern River Gas Transmission Company (Kern River), P.O. Box 2511, Houston, Texas 77252, filed in Docket No. CP94–699–000 a petition pursuant to Section 16 of the Natural Gas Act (NGA) and Rule 207(a)(2) of the Commission's Rules of Practice and Procedure (18 CFR 385.207 (a)(2)), for a declaratory order clarifying activities authorized under its blanket certificate issued in Docket No. CP89–2048–000,[1] all as more fully set forth in the petition which is on file with the Commission and open to public inspection.

Kern River seeks a declaratory order from the Commission finding that Kern River may, under certain conditions, upgrade its existing compressor engines under its blanket construction certificate issued under Subpart F of Part 157 of the Commission's regulations in Docket No. CP89–2048–000.[2] Kern River states that relevant Section 157.202(b)(2)(ii)(C) of the regulations excludes from eligibility for blanket authorization a looping or compression facility that alters the capacity of a main line. *Kern River proposes to upgrade the horsepower potential* of its mainline compressors at the same time the compressors are being overhauled, and retrofitted to meet environmental requirements, but include controls to limit firing temperatures to *restrict outputs to existing horsepower capacity levels.* Kern River states that it would not seek to recover the costs associated with the horsepower upgrades until such time as it files a certificate application for authorization to place the increased horsepower in service.

Kern River states that its on-going overhaul and SoLoNOx retrofit program provides Kern River with an opportunity to upgrade its compressor engines to produce more horsepower at a minimal cost while reducing nitrogen oxide emissions by approximately 75%.[3] Kern River states that permitting the upgrades would enable it in the future to very economically provide additional expansion capacity on the Kern River system. Kern River believes increased compression would be required within the next two years. Kern River states that savings of approximately $440,000–$1,200,000 could be realized by upgrading the turbines at the same time as they are overhauled and retrofitted.

Comment date: August 26, 1994, in accordance with the first subparagraph of Standard Paragraph F at the end of this notice.

Standard Paragraphs:

F. Any person desiring to be heard or to make any protest with reference to said application should on or before the comment date, file with the Federal Energy Regulatory Commission, Washington, D.C. 20426, a motion to intervene or a protest in accordance with the requirements of the Commission's Rules of Practice and Procedure (18 CFR 385.214 or 385.211) and the Regulations under the Natural Gas Act (18 CFR 157.10). All protests filed with the Commission will be considered by it in determining the appropriate action to be taken but will not serve to make the protestants parties to the proceeding. Any person wishing to become a party to a proceeding or to participate as a party in any hearing therein must file a motion to intervene in accordance with the Commission's Rules.

Take further notice that, pursuant to the authority contained in and subject to the jurisdiction conferred upon the Federal Energy Regulatory Commission by Sections 7 and 15 of the Natural Gas Act and the Commission's Rules of Practice and Procedure, a hearing will be held without further notice before the Commission or its designee on this application if no motion to intervene is filed within the time required herein, if the Commission on its own review of the matter finds that a grant of the certificate and/or permission and approval for the proposed abandonment are required by the public convenience and necessity. If a motion for leave to

[1] *See* 50 FERC ¶ 61,069.

[2] Kern River cites *Transcontinental Gas Pipeline Corporation*, 65 FERC ¶ 61,408 (1993), as a similar case.

[3] Kern River states that it performs major engine overhauls on its mainline Solar Mars compressor units at approximately 30,000 running hours in order to maintain the continued reliable and efficient operation of the units.

intervene is timely filed, or if the Commission on its own motion believes that a formal hearing is required, further notice of such hearing will be duly given.

Under the procedure herein provided for, unless otherwise advised, it will be unnecessary for applicant to appear or be represented at the hearing.

G. Any person or the Commission's staff may, within 45 days after issuance of the instant notice by the Commission, file pursuant to Rule 214 of the Commission's Procedural Rules (18 CFR 385.214) a motion to intervene or notice of intervention and pursuant to Section 157.205 of the Regulations under the Natural Gas Act (18 CFR 157.205) a protest to the request. If no protest is filed within the time allowed therefor, the proposed activity shall be deemed to be authorized effective the day after the time allowed for filing a protest. If a protest is filed and not withdrawn within 30 days after the time allowed for filing a protest, the instant request shall be treated as an application for authorization pursuant to Section 7 of the Natural Gas Act.

Linwood A. Watson, Jr.,

Acting Secretary.

[FR Doc. 94–19823 Filed 8–12–94; 8:45 am]

BILLING CODE 6717–01–P

[Docket Nos. TX93–2–004; EL94–59–002]

City of Bedford, VA, et al. vs. Appalachian Power Co.; Notice of Filing

August 9, 1994.

Take notice that on August 1, 1944, American Electric Power Service Corporation (AEPSC) tendered for filing, on behalf of Appalachian Power Company and certain of the operating subsidiaries of the American Electric Power (AEP) System, a compliance filing in the above-referenced dockets. The compliance filing consists of the following: (1) four (4) Transmission Service Agreements (TSAs), and each between AEP and the Cities of Bedford, Danville, and Martinsville, Virginia, and the Town of Richlands, Virginia (collectively, the Virginia Municipals); and, (2) amendments to the Electric Service Agreements currently in existence between APCo and each of the four (4) Virginia Municipals to accommodate the power and energy to be transmitted pursuant to the TSAs.

Copies of the filing were served upon the affected customers, the Virginia State Corporation Commission, the Public Service Commission of West Virginia, and all parties of record.

Any person desiring to be heard or to protest said filing should file a motion to intervene or protest with the Federal Energy Regulatory Commission, 825 North Capitol Street, N.E., Washington, DC 20426, in accordance with Rules 211 and 214 of the Commission's Rules of Practice and Procedure (18 CFR 385.211 and 18 CFR 385.214). All such motions or protests should be filed on or before August 24, 1994. Protests will be considered by the Commission in determining the appropriate action to be taken, but will not serve to make protestants parties to the proceeding. Any person wishing to become a party must file a motion to intervene. Copies of this filing are on file with the Commission and are available for public inspection. Answers to the conflict should be due on or before September 8, 1994.

Linwood A. Watson, Jr.,

Acting Secretary.

[FR Doc. 94–19821 Filed 8–12–94; 8:45 am]

BILLING CODE 6717–01–M

[Docket No. RP94–350–000]

Colorado Interstate Gas Co.; Notice of Colorado Interstate Gas Co.; Filing of Report on Imbalances

August 9, 1994.

Take notice that on August 1, 1994, Colorado Interstate Gas Company (CIG), tendered for filing a Report on Imbalances as required pursuant to Ordering Paragraph (B) of the order issued September 3, 1993, in Docket No. RS92–4–002 (64 FERC ¶ 61,277) (Order).

CIG states it was required in the Order to file with the Federal Energy Regulatory Commission by August 1, 1994, a study justifying its imbalance penalties and such study has been filed.

Any person desiring to be heard or to protest said filing should file a motion to intervene or a protest with the Federal Energy Regulatory Commission, 825 North Capitol Street, N.E., Washington, DC 20426, in accordance with Sections 385.211 and 385.214 of the Commission's Rules and Regulations. All such motions or protests should be filed on or before August 16, 1994. Protests will be considered by the Commission in determining the appropriate action to be taken, but will not serve to make protestants parties to the proceeding. Any person wishing to become a party must file a motion to intervene. Copies of this filing are on file with the Commission and are available for public inspection in the public reference room.

Linwood A. Watson, Jr.,

Acting Secretary.

[FR Doc. 94–19822 Filed 8–12–94; 8:45 am]

BILLING CODE 6717–01–M

Office of Hearings and Appeals

Proposed Implementation of Special Refund Procedures

AGENCY: Office of Hearings and Appeals, Department of Energy.

ACTION: Notice of Proposed Implementation of Special Refund Procedures.

SUMMARY: The Office of Hearings and Appeals (OHA) of the Department of Energy (DOE) announces the proposed procedures for disbursement of a total of $338,267.85, plus accrued interest, in alleged crude oil overcharges obtained by the DOE under the terms of the Consent Orders entered into with King Petroleum, Inc., *et al.*, Case No. LEF–0125 (King), and Billy Bridewell, William J. Cobb, *et al.*, Case No. LEF–0126 (Bridewell). The OHA has tentatively determined that the funds obtained from King and Bridewell, plus interest accrued, will be distributed in accordance with the DOE's Modified Statement of Restitutionary Policy Concerning Crude Oil Overcharges. Since the June 30, 1994, deadline for filing crude oil refund applications has passed, no new applications will be accepted for these funds.

DATE AND ADDRESSES: Comments must be filed in duplicate by September 14, 1994, and should be addressed to the Office of Hearings and Appeals, 1000 Independence Avenue, SW., Washington, DC 20585. All comments should be marked with the reference numbers LEF–0125 and LEF–0126.

FOR FURTHER INFORMATION CONTACT: Thomas L. Wieker, Deputy Director, Office of Hearings and Appeals, 1000 Independence Avenue SW., Washington, DC 20585, (202) 586–2390.

SUPPLEMENTARY INFORMATION

In accordance with 10 C.F.R. 205.282(b), notice is hereby given of the issuance of the Proposed Decision and Order set out below. The Proposed Decision and Order sets forth the procedures that the DOE has tentatively formulated to distribute a total of $338,267.85, plus accrued interest, obtained by the DOE under the terms of Consent Orders entered into with King Petroleum, Inc., *et al.*, and Billy Bridewell, William J. Cobb, *et al.* These funds were paid towards the settlement

of alleged violations of the DOE price and allocation regulations involving the sale of crude oil during the period of price controls.

The OHA has proposed to distribute these funds in accordance with the DOE's Modified Statement of Restitutionary Policy Concerning Crude Oil Overcharges, 51 Fed. Reg. 27899 (August 4, 1986) (the MSRP). Under the MSRP, crude oil overcharge monies are divided between the Federal government, the states, and injured purchasers of refined petroleum products. Refunds to the states would be distributed in proportion to each state's consumption of petroleum products during the price control period. Refunds to eligible purchasers would be based on the volume of petroleum products they purchased and the degree to which they can demonstrate injury. Because the June 30, 1994, deadline for crude oil refund applications has passed, no new applications from purchasers of refined petroleum products will be accepted for these funds. Instead, the share allocated to these purchasers will be added to the general crude oil overcharge pool used for direct restitution.

Any member of the public may submit written comments regarding the proposed refund procedures. Commenting parties are requested to provide two copies of their submissions. Comments must be submitted within 30 days of publication of this notice in the **Federal Register** and should be sent to the address set forth at the beginning of this notice. All comments received in this proceeding will be available for public inspection between the hours of 1 p.m. and 3 p.m., Monday through Friday, except Federal holidays, in the Public Reference Room of the Office of Hearings and Appeals, located in room 1E-234, 1000 Independence Avenue SW., Washington, DC 20585.

Dated: August 8, 1994.

George B. Breznay,

Director, Office of Hearings and Appeals.

August 8, 1994.

Proposed Decision and Order of the Department of Energy

Implementation of Special Refund Procedures

Names of Firms: King Petroleum, Inc., *et al.* Billy Bridewell, William J. Cobb, *et al.*

Date of Filing: May 26, 1994.

Case Numbers: LEF-0125, LEF-0126.

On May 26, 1994, the Economic Regulatory Administration (ERA) of the Department of Energy (DOE) filed a Petition for the Implementation of Special Refund Procedures with the Office of Hearings and Appeals (OHA), to distribute funds which King Petroleum, Inc., *et al.* (King) and Billy Bridewell, William J. Cobb, *et al.* (Bridewell) remitted to the DOE pursuant to Consent Orders entered into by the parties and the DOE. King has remitted a total of $1,245.04, while Bridewell has remitted a total of $337,022.85.

In accordance with the procedural regulations codified at 10 C.F.R. part 205, Subpart V (Subpart V), the ERA requests in its petition that the OHA establish special refund procedures to remedy the effects of alleged regulatory violations which were resolved by these Consent Orders. This Proposed Decision and Order sets forth the OHA's tentative plan to distribute these funds.

I. Jurisdiction and Authority

The Subpart V regulations set forth general guidelines which may be used by the OHA in formulating and implementing a plan of distribution of funds received as a result of an enforcement proceeding. The DOE policy is to use the Subpart V process to distribute such funds. For a more detailed discussion of Subpart V and the authority of the OHA to fashion procedures to distribute refunds, *see* Petroleum Overcharge Distribution and Restitution Act of 1986, 15 U.S.C. §§ 4501–07 (1988), *Office of Enforcement*, 9 DOE ¶ 82,508 (1981), and *Office of Enforcement*, 8 DOE ¶ 82,597 (1981).

We have considered the ERA's petition that we implement a Subpart V proceeding with respect to the King and Bridewell Consent Orders and have determined that such a proceeding is appropriate. This Proposed Decision and Order sets forth the OHA's tentative plan to distribute these funds.

II. Proposed Refund Procedures

A. Crude Oil Refund Policy

We propose to distribute the funds obtained from King and Bridewell in accordance with the DOE's Modified Statement of Restitutionary Policy in Crude Oil Cases, 51 Fed. Reg. 27899 (August 4, 1986) (the MSRP). The MSRP was issued as a result of a court-approved Settlement Agreement. *In re: The Department of Energy Stripper Well Exemption Litigation*, 653 F Supp. 108 (D. Kan.), 6 Fed. Energy Guidelines ¶ 90,509 (1986) (the Stripper Well Settlement Agreement). The MSRP establishes that 40 percent of the crude oil funds will be remitted to the Federal government, another 40 percent to the states, and up to 20 percent may initially be reserved for payment of claims to injured parties. The MSRP also specifies that any monies remaining after all valid claims by injured purchasers are paid be disbursed to the Federal government and the states in equal amounts.

The OHA has utilized the MSRP in all Subpart V proceedings involving alleged crude oil violations. *See* Order Implementing the MSRP, 51 Fed. Reg. 29689 (August 20, 1986). This Order provided a period of 30 days for filing of comments or objections to our proposed use of the MSRP as the groundwork for evaluating claims in crude oil refund proceedings. Following this period, the OHA issued a Notice evaluating the numerous comments which it had received pursuant to the Order Implementing the MSRP. This Notice was published at 52 Fed. Reg. 11737 (April 10, 1987) (the April 10 Notice).

The April 10 Notice contained guidance to assist potential claimants wishing to file refund applications for crude oil monies under the Subpart V regulations. Generally, all claimants would be required to (1) document their purchase volumes of petroleum products during the August 19, 1973 through January 27, 1981, crude oil price control period, and (2) show that they were injured by the alleged crude oil overcharges. We also specified that end-users of petroleum products whose businesses were unrelated to the petroleum industry will be presumed to have been injured by the alleged crude oil overcharges. End-users, therefore, need only submit documentation of their purchase volumes. *See City of Columbus, Georgia*, 16 DOE ¶ 85,550 (1987).

Additionally, we stated that we would evaluate crude oil refunds on a per gallon (or volumetric) basis. We obtained the volumetric figure by dividing the estimated crude oil refund pool by the total consumption of petroleum products in the United States during the crude oil price control period. The OHA has adopted the refund procedures outlined in the April 10 Notice in numerous cases. *See, e.g., Shell Oil Co.*, 17 DOE ¶ 85,204 (1988); *Mountain Fuel Supply Co.*, 14 DOE ¶ 85,475 (1986). The volumetric payment rate is $.0008 per gallon of eligible refined petroleum product purchased during the price control period.

B. Refund Claims

On May 3, 1993, the OHA issued a Notice which established June 30, 1994, as the final deadline for filing an Application for Refund from all crude oil funds. *See* 58 Fed. Reg. 26,318 (May 3, 1993) (the May 3 Notice). We noted at that time that the crude oil refund proceeding was over seven years old, and that many crude oil Implementation Orders inviting Applications for Refund had been published in the **Federal Register**. *Id.* In fact, since August 1986, there have been approximately 51 announcements published in the **Federal Register** inviting applicants to file claims for crude oil overcharge refunds.

We further stated in the May 3 Notice that we had, at that time, received nearly 96,000 crude oil refund applications for the crude oil overcharge funds. In view of these facts, we concluded that "this refund proceeding has been well publicized and that those firms, individuals, and organizations that have an interest in filing for this type of refund have had a reasonable opportunity to do so." *Id.* Therefore, for reasons of administrative efficiency and in fairness to those Applicants who are awaiting the final disbursement of crude oil funds, we determined that we would not accept crude oil refund applications postmarked later than June 30, 1994. *Id.*

C. King and Bridewell

Subpart V regulations provide a 30 day period for submission of comments after the issuance of a Proposed Decision and Order implementing special refund proceedings. 10 C.F.R. § 205.282(b). Further, these regulations indicate that after the issuance of the final Decision and Order implementing refund

procedures, there should be a period of 90 days in which refund applications may be filed. 10 C.F.R. § 205.283(b). Obviously, since the instant Proposed Decision and Order will issue after the June 30, 1994, filing deadline referred to above, we cannot both maintain that deadline and adhere to the provisions of Section 205.282 and Section 205.283.

After reviewing the status of the crude oil overcharge refund proceeding as a whole, the intent of the Subpart V regulations and overall administrative considerations, we have decided that a separate filing deadline beyond our June 30 deadline is not advisable or appropriate in this case. As discussed below, we tentatively decide that the funds remitted by King and Bridewell should be included in the general crude oil refund proceeding for which notice has been given for the last eight years. No separate application may be made for these funds. Instead, we propose that these funds become part of the larger pool of funds available for disbursement in the crude oil proceeding. *See, e.g., Seneca Oil Co.*, 21 DOE ¶ 85,327 (1991).

It was never intended that this proceeding should continue indefinitely. Over the course of the eight years this proceeding has been in effect, we have received approximately 100,000 Applications for Refund. As we noted in the May 3 Notice, the need for administrative efficiency and finality require that we set a final deadline.

We believe this decision is consistent with our regulations and past practices. The Subpart V regulations state: "In establishing standards and procedures for implementing refund distributions, the Office of Hearings and Appeals shall take into account the desirability of distributing the refunds in an efficient and equitable manner and resolving to the maximum extent practicable all outstanding claims." 10 C.F.R. § 205.282(e). As discussed above, the crude oil refund proceeding has been well publicized and all interested parties have had ample opportunity to apply. In addition, it would impose an undue burden on those applicants who applied in a timely fashion if we held this proceeding open until all outstanding crude oil enforcement actions were resolved.

Our practice over the last several years has been to treat all crude oil overcharge funds as part of one crude oil proceeding, rather than as a multitude of separate small refund proceedings. We have for many years refunded all crude oil claims at a rate of $.0008 per gallon. This rate was established in 1989 by estimating the funds likely to become available for injured persons during the crude oil proceeding. *Crude Oil Supplemental Refund Distribution*, 18 DOE ¶ 85,878 (1989). We have also long maintained that an applicant need only submit one application for its share of all available crude oil overcharge funds. *See, e.g., A. Tarricone, Inc.*, 15 DOE ¶ 85,495 (1987).

In reaching our determination in this case, we have given some consideration to whether there are potential applicants who will now be precluded from making refund claims from these funds and the degree of harm they might experience if they were denied the right to apply for a King and Bridewell refund.

As we pointed out above, we have received approximately 100,000 crude oil overcharge refund applications. Those who have previously filed a crude oil overcharge refund application need not file another claim in order to receive a portion of the Bridewell and King fund. We think that most of those eligible to participate in this refund program and who wish to do so have already filed applications. Given that the crude oil overcharge refund proceeding has been ongoing for approximately eight years, we tend to believe that the number of potential applicants genuinely interested in filing a claim, but who have not yet done so, is relatively small.

We also believe that the financial interests of these potential applicants are very minimal, when compared with the overall interest in bringing the crude oil overcharge refund proceeding to a close. The total King and Bridewell funds of $338,268 results in a refund of $.00000017 per gallon, or 17 cents per million gallons consumed.[1]

At this rate, even a very large applicant, one that consumed 100 million gallons, but which applied only in the King and Bridewell proceeding, would receive a refund of merely $17. Yet, an applicant of this size is extremely unusual. For example, of the 100,000 crude oil overcharge claims that have been filed, only 552, or .5 percent, are based on purchases of 100 million gallons or more. We would thus expect that virtually no claimants would be interested in applying for a refund in this King and Bridewell proceeding.

Furthermore, pursuant to the MSRP, we disburse 40 percent of the funds available to the States and 40 percent to the Federal Government. The funds made available to these governmental entitites for indirect restitution are unaffected by our decision to accept no new claims from injured parties. Thus, only 20 percent of the $338,268 total King and Bridewell fund, or $67,654, is actually available for payment to individual claimants by the OHA. Most of that $67,654 would go to those that have already filed claims, since refunds are disbursed on a pro rata basis. The funds actually available for disbursement to any new King and Bridewell claimants would be minimal indeed.

As indicated by the above discussion, we have concluded that due to the small amount of the potential refund available, and the limited number of potential additional claimants for these funds, it would not be useful to provide for another application period.

We therefore tentatively conclude that the interests of equity and efficiency underlying 10 C.F.R. § 205.282(e) justify our including the funds remitted by King and Bridewell in the general crude oil refund proceeding instead of holding a separate refund proceeding for these funds or extending the deadline for filing crude oil refund applications indefinitely. Consequently, we tentatively decide that 20% of the funds remitted by King and Bridewell (plus appropriate accrued interest) should be added to the general crude oil overcharge pool for direct restitution to those applicants who applied before the June 30, 1994, crude oil refund deadline.

D. Payments to the Federal Government and the States

Under the terms of the MSRP, we propose that the remaining 80% of the alleged crude oil overcharge amounts subject to this Proposed Decision, plus accrued interest, should be disbursed in equal shares to the states and Federal government for indirect restitution. Refunds to the states will be in proportion to the consumption of petroleum products in each state during the period of price controls. The share or ratio of the funds which each state will receive is contained in Exhibit H of the *Stripper Well Settlement Agreement*, 6 Fed. Energy Guidelines ¶ 90,509 at 90,687. When disbursed, these funds will be subject to the same limitations and reporting requirements as all other crude oil monies received by the states under the Stripper Well Settlement Agreement.

It Is Therefore Ordered That:

The refund amounts remitted to the Department of Energy by King Petroleum, Inc., *et al.*, Case No. LEF–0125, and Billy Bridewell, William J. Cobb, *et al.*, Case No. LEF–0126, will be distributed in accordance with the foregoing Decision.

[FR Doc. 94–19921 Filed 8–12–94; 8:45 am]

BILLING CODE 6450–01–P

[1] This amount is derived by dividing the total alleged crude oil violation amounts involved in this proceeding ($338,268) by the total consumption of petroleum products in the United States during the period of price controls (2,020,997,335,000 gallons). *Mountain Fuel Supply Co.*, 14 DOE ¶ 85,475 (1986).

ENVIRONMENTAL PROTECTION AGENCY

[FRL–5051–8]

Agency Information Collection Activities Under OMB Review

AGENCY: Environmental Protection Agency (EPA).

ACTION: Notice.

SUMMARY: In compliance with the Paperwork Reduction Act (44 U.S.C. 3501 *et seq.*), this notice announces that the Information Collection Request (ICR) abstracted below has been forwarded to the Office of Management and Budget (OMB) for review and comment. The ICR describes the nature of the information collection and its expected cost and burden.

DATES: Comments must be submitted on or before September 14, 1994.

FOR FURTHER INFORMATION CONTACT: For further information, or to obtain a copy of this ICR, contact Sandy Farmer at EPA (202) 260–2740.

SUPPLEMENTARY INFORMATION:

Office of Prevention, Pesticides and Toxic Substances

Title: Preliminary Assessment Information Rule (PAIR)—(EPA ICR No.

0586.07; OMB #2070–0054). This is a request for extension of the expiration date of a currently approved collection.

Abstract: The Preliminary Assessment Information Rule (PAIR) was promulgated under § 8(a) of the Toxic Substances Control Act (TSCA). PAIR gives EPA, as well as other Federal agencies, the authority to request information on specific chemical products that are subject to TSCA § 8(a) regulations. Manufacturers or importers of chemicals listed under the § 8(a) rule, must report to the Agency and keep records of production, import, use, environmental releases, and exposure data. The information that the EPA receives from a PAIR report is, in most cases, sufficient to support preliminary risk determination, or decision to require testing of a chemical.

Burden Statement: The public burden for this collection of information is estimated to average less than 27 hours per response for reporting and 4 hours per recordkeeper annually. This estimate includes the time needed to review instructions, search existing data sources, gather and maintain the data needed, complete the form, and review the collection of information.

Respondents: Chemical Manufacturers and importers.

Estimated No. of Respondents: 28.

Estimated No. of Responses Per Respondent: 3.

Estimated Total Annual Burden on Respondents: 1,946 hours.

Frequency of Collection: On occasion.

Send comments regarding the burden estimate, or any other aspect of the information collection, including suggestions for reducing the burden to:

Sandy Farmer, U.S. Environmental Protection Agency, Information Policy Branch (2136), 401 M Street, S.W., Washington, DC 20460.

Matthew Mitchell, Office of Management and Budget, Office of Information and Regulatory Affairs, 725 17th Street, NW, Washington, DC 20503.

Dated: July 28, 1994.

June Stewart,

Acting Director.

[FR Doc. 94–19912 Filed 8–12–94; 8:45 am]

BILLING CODE 6560–50–M

[FRL–5052–1]

Agency Information Collection Activities Under OMB Review

AGENCY: Environmental Protection Agency (EPA).

ACTION: Notice.

SUMMARY: In compliance with the Paperwork Reduction Act (44 U.S.C. 3501 *et seq.*), this notice announces that the Information Collection Request (ICR) abstracted below has been forwarded to the Office of Management and Budget (OMB) for review and comment. The ICR describes the nature of the information collection and its expected cost and burden.

DATES: Comments must be submitted on or before September 14, 1994.

FOR FURTHER INFORMATION CONTACT: For further information or to obtain a copy of this ICR contact Sandy Farmer at EPA, (202) 260–2740.

SUPPLEMENTARY INFORMATION:

Office of Research and Development

Title: Information Collection Request (ICR) for the National Human Exposure Assessment (NHEXAS) Phase I Field Studies (EPA ICR No. 1701.01).

Abstract: This is a new collection of information in support of the pilot testing phase of the NHEXAS program, a program sponsored by EPA's Office of Research and Development. Many groups, including the EPA's Science Advisory Board, the National Academy of Science, and the U.S. Congress, have recognized the need to improve exposure assessments to better estimate the magnitude, likelihood, and uncertainty of environmentally-induced health effects. To address this need, the NHEXAS program has been established to document the fact, distribution, and determinants of exposure to pollutants experienced by the U.S. population and to monitor geographic and temporal trends in exposure. NHEXAS Phase I will provide critical information to evaluate and improve the design and execution of the full-scale NHEXAS survey.

NHEXAS Phase I consists of three separate field studies conducted in two regions of the country. The activities of each field study will include: (1) Administering questionnaires to respondents, (2) sampling potential sources of pollutants (dust, tap water, indoor air, etc.) from respondent homes, and (3) biological sampling (blood, urine, hair, etc.) of respondents. Respondents will be asked to provide: (1) Descriptive information characterizing their living quarters and fellow occupants, (2) baseline information on the individual and usual frequency of their daily activities, (3) technical information on their home and the presence of pollutant sources in their home, (4) information on infrequent activities they exhibited during the sample period, (5) detailed activity and location (time diary) information, and (6) 24-hour dietary information.

The EPA will gather the information, conduct quality assurance and control on the information, and use the information to design the national NHEXAS survey.

Burden Statement: Public reporting burden for this collection of information is estimated to average 5 hours per response including the time for reviewing instructions, gathering information and completing and reviewing the information.

Respondents: Individuals or households that have volunteered and were selected to participate in NHEXAS Phase I.

Estimated Number of Respondents: 1,796.

Estimated Number of Responses Per Respondent: 1.

Frequency of Collection: One time.

Estimated Total Annual Burden on Respondents: 8,265 hours.

Send comments regarding the burden estimate, or any other aspect of this collection of information, including suggestions for reducing the burden to: Sandy Farmer, U.S. Environmental Protection Agency, Information Policy Branch (2136), 401 M St. SW., Washington, DC 20460; and Timothy Hunt, Office of Management and Budget, Office of Information and Regulatory Affairs, 725 17th St. NW., Washington, DC 20501.

Dated: July 28, 1994.

Jane Stewart,

Acting Director, Regulatory Management Division.

[FR Doc. 94–19886 Filed 8–12–94; 8:45 am]

BILLING CODE 6560–50–M

[FRL–5051–8]

Acid Rain Program: Permit Modifications

AGENCY: Environmental Protection Agency (EPA).

ACTION: Notice of permit modifications.

SUMMARY: The U.S. Environmental Protection Agency (EPA) is issuing for comment draft, 5-year sulfur dioxide (SO_2) compliance plans for three utility plants which amend previously issued draft or final Phase I Acid Rain Permits, in accordance with the Acid Rain Program regulations (40 CFR part 72).

DATES: Comments on the draft compliance plans must be received no later than 30 days after the date of this notice or the date of publication of a similar notice in a local newspaper.

ADDRESSES: *Administrative Records.* The administrative record for the permits, except information protected as confidential, may be viewed during

normal operating hours at EPA Region 5, Ralph H. Metcalfe Federal Bldg., 77 West Jackson Blvd., Chicago, IL 60604.

Comments. Send comments, requests for public hearings, and requests to receive notice of future actions to EPA Region 5 (A-18J), Air and Radiation Division, Attn: David Kee, Director (address above). Submit comments in duplicate and identify the permit to which the comments apply, the commenter's name, address, and telephone number, and the commenter's interest in the matter and affiliation, if any, to the owners and operators of all units in the plan. All timely comments will be considered, except those pertaining to standard provisions under 40 CFR 72.9 and issues not relevant to the permit.

Hearings. To request a public hearing, state the issues proposed to be raised in the hearing. EPA may schedule a hearing if EPA finds that it will contribute to the decision-making process by clarifying significant issues affecting a SO_2 compliance plan.

FOR FURTHER INFORMATION CONTACT: Cecilia Mijares, (312) 886-0968.

SUPPLEMENTARY INFORMATION: Title IV of the Clean Air Act directs EPA to establish a program to reduce the adverse effects of acidic deposition by promulgating rules and issuing permits to emission sources subject to the program. On January 11, 1993, EPA promulgated final rules implementing the program. Subsequently, several parties filed petitions for review of the rules with the U.S. Court of Appeals for the District of Columbia Circuit. On November 18, 1993, EPA published a notice of proposed revisions to rules regarding Phase I substitution and reduced utilization plans (sections 404 (b) and (c) and 408(c)(1)(B) of the Act). On May 4, 1994, EPA and other parties signed a settlement agreement addressing the substitution and reduced utilization issues. In today's action, EPA is issuing permit modifications, allocating sulfur dioxide emission allowances and approving compliance plans, that are consistent with the May 4, 1994 settlement, to the following utility plants:

Grand Tower in Illinois: 1,068 substitution allowances for each year 1995-1999 to unit 07; 1,015 substitution allowances for each year 1995-1999 to unit 08; one substitution plan in which Meredosia unit 05 designates units 07 and 08 as substitution units.

Meredosia in Illinois: 44 substitution allowances for each year 1995-1999 to unit 06; three substitution plans in which unit 05 designates unit 06, Grand Tower units 07 and 08, and Newton unit 2 as substitution units.

Newton in Illinois: 6,346 substitution allowances for each year 1995-1999 to unit 2; and a substitution plan in which Meredosia unit 05 designates unit 2 as a substitution unit.

Dated: July 28, 1994.

Brian J. McLean,

Director, Acid Rain Division, Office of Atmospheric Programs, Office of Air and Radiation.

[FR Doc. 94-19887 Filed 8-12-94; 8:45 am]

BILLING CODE 6560-50-P

[FRL-5050-6]

Proposed Settlement of Administrative Order by Consent

AGENCY: U.S. Environmental Protection Agency (U.S. EPA).

ACTION: Notice; proposed settlement.

SUMMARY: U.S. EPA is proposing to settle a claim under Section 122 of CERCLA with potentially responsible parties for costs that have been incurred during remedial activities at the Torch Lake Superfund Site in Houghton County, Michigan. Twenty-eight (28) Respondents have agreed to grant the U.S. EPA access to their property for implementation of the selected remedy for the Site and to enact deed restrictions on their respective parcels. This action is being taken to settle all liability related to the Torch Lake Superfund Site with the Respondents pursuant to the intent of Section 122 of CERCLA, as amended.

DATE: Comments on this proposed settlement must be received now or before September 14, 1994.

ADDRESSES: A copy of the proposed settlement is available at the following address for review: (It is recommend that you telephone Peter Felitti at (312) 886-7157, before visiting the Region V Office). U.S. Environmental Protection Agency, Region V, Office of Superfund, Remedial and Enforcement Response Branch, 77 West Jackson Street, Chicago, Illinois 60604-3590.

Comments on the proposed settlement should be addressed to: (Please submit an original and three copies, if possible). Peter Felitti, Assistant Regional Counsel, Office of Regional Counsel, U.S. Environmental Protection Agency, Region V, 77 West Jackson Street, Chicago, Illionis 60604-3590, (312) 886-7157.

FOR FURTHER INFORMATION CONTACT: Peter Felitti, Office of Regional Counsel, at (312) 886-7157.

SUPPLEMENTARY INFORMATION: The Torch Lake Superfund Site, which is on the National Priorities List, is located on the Keweenaw Peninsula in Houghton County, Michigan and covers over 1,000 acres. The Site was the location of copper milling and smelting facilities and the repository of mining wastes, known as tailing piles or stampsands. After the Site was placed on the NPL, it was divided into three operable units ("OU"). OU I deals with stampsands along Torch Lake; OU II deals with the surface water and groundwater; and OU III deals with stampsands that are located in the Keweenaw Peninsula. U.S. EPA conducted a Remedial Investigation/Feasibility Study and issued a Record of Decision that called for a vegetation cover to be placed over a large portion of the exposed tailing piles at the Site.

During the investigation of the Site, it was determined that portions of the Site and areas adjacent to the Site are presently owned by a number of individuals, businesses and municipalities who were not involved in the generation or disposal of the tailing piles. In order for the selected remedy to be implemented, access will be needed to those portions of the Site that include tailing piles that will be covered with a vegetation cover. Further, in order to maintain the vegetation cover, deed restrictions will be necessary.

A 30-day period, beginning on the date of publication, is open pursuant to Section 122(i) of CERCLA for comments on the proposed settlement. Comments should be sent to the Office of Public Affairs, U.S. Environmental Protection Agency, Region V, 77 West Jackson Street, Chicago, Illinois 60604-3590.

Valdas V. Adamkus,

Regional Administrator-Region V, U.S. Environmental Protection Agency.

[FR Doc. 94-19885 Filed 8-12-94; 8:45 am]

BILLING CODE 6560-50-M

FEDERAL COMMUNICATIONS COMMISSION

Public Information Collection Requirements Submitted to Office of Management and Budget for Review

August 2, 1994.

The Federal Communications Commission has submitted the following information collection requirements to OMB for review and clearance under the Paperwork Reduction Act of 1980 (44 U.S.C. 3507)

Copies of these submissions may be purchased from the Commission's copy contractor, International Transcription Service, Inc., 2100 M Street, N.W., Suite 140, Washington, DC 20037, (202) 857-

3800. For further information on these submissions contact Judy Boley, Federal Communications Commission, (202) 418–0214. Persons wishing to comment on these information collections should contact Timothy Fain, Office of Management and Budget, Room 10236 NEOB, Washington, DC 20503, (202) 395–3561.

OMB Number: 3060–0206.

Title: Part 21—Domestic Public Fixed Radio Services.

Action: Revision of a currently approved collection.

Respondents: Businesses or other for-profit (including small businesses).

Frequency of Response: Recordkeeping, semi-annual, annual and on occasion reporting requirements.

Estimated Annual Burden: 28,616 responses, 1.9 hours average burden per response, 54,370 hours total reporting burden; 100 recordkeepers, 2 hours average burden per recordkeeper; 54,570 hours total annual burden.

Needs and Uses: The information requested under Part 21 is used by the Commission staff to fulfill its obligations as set forth in Sections 308 and 309 of the Communications Act of 1934, as amended, to determine the technical, legal and other qualifications of applicants to operate a station in the Domestic Public Fixed Radio Services. The information will also be used to determine whether grant of an application will service the public interest, convenience and necessity. The staff also uses this information to ensure that applicants and licensees comply with the ownership and transfer restrictions imposed by Section 310 of the Act. On February 9, 1993, the Commission released Notice of Proposed Rulemaking (NPRM) in CC Docket No. 93–2, proposing to allow pre-authorization construction of Point-to-Point Microwave Radio Service stations, reduce the PPMRS station construction period, eliminate FCC Forms 430 and 494–A, and to consolidate FCC Forms 702 and 704. Comments have been filed in response to this NPRM and the staff is now drafting a Report and Order. The final disposition of this proceeding is expected during the fourth quarter of FY 1994.

OMB Number: 3060–0298.

Title: Part 61—Tariffs (Other than Tariff Review Plan).

Action: Revision of a currently approved collection.

Respondents: Businesses or other for-profit.

Frequency of Response: On occasion reporting requirement.

Estimated Annual Burden: 4,797 responses; 203 hours average burden per response; 972,423 hours total annual burden.

Needs and Uses: Various sections of the Communications Act require that common carriers establish just and reasonable charges, practices and regulations for the services they provide. The schedules containing these charges, practices and regulations must be filed with the Commission which is required to determine whether such schedules are just, reasonable and not unduly discriminatory. Part 61 of the Commission's rules establishes the procedures for filing tariffs which contain the charges, practices and regulations of the common carriers, supporting economic data and other related documents. The supporting data must also conform to other parts of the Rules such as Parts 36 and 69. Part 61 prescribes the framework for the initial establishment of and subsequent revisions to tariffs. Tariffs that do not conform to Part 61 requirements may be rejected. The information collected through a carrier's tariff is used by the Commission to determine whether the services offered are just and reasonable as the Act requires. The tariffs and any supporting documentation are examined in order to determine if the services are offered in a just and reasonable manner. If tariffs were not filed, the FCC would not be able to carry out its responsibilities as required by the Act. As of August 18, 1993, all domestic non-dominant carriers are required to file on diskettes.

Federal Communications Commission.

William F. Caton,

Acting Secretary.

[FR Doc. 94–19807 Filed 8–12–94; 8:45 am]

BILLING CODE 6712–01–M

[Report No. 2024]

Petition for Reconsideration and Clarification of Actions in Rulemaking Proceedings

July 28, 1994.

Petition for reconsideration and clarification have been filed in the Commission rulemaking proceedings listed in this Public Notice and published pursuant to 47 CFR Section 1.429(e). The full text of these documents are available for viewing and copying in Room 239, 1919 M Street, NW., Washington, DC or may be purchased from the Commission's copy contractor ITS, Inc, (202) 857–3800. Opposition to these petitions must be filed. See section 1.4(b)(1) of the Commission's rules (47 CFR 1.4(b)(1)). Replies to an opposition must be filed within 10 days after the time for filing oppositions has expired.

Subject: Amendment of Section 73.202(b), Table of Allotments Collidge and Gilbert, Arizona.
Number of Petitions Filed: 1

Subject: Amendment of the Schedule of Application Fees Set Forth in Section 1.1102 through 1.1105 of the Commissions Rules. (GEN Docket No. 86–285)
Number of Petitions Filed: 3

Subject: Amendment of the Commission's Rules to Establish New Personal Communications Services. (GEN Docket No. 90–314)
Number of Petitions Filed: 10

Subject: Amendment of Section 73.202(b), Table of Allotments, FM Broadcast Stations. (Cambridge and St. Michaels, Maryland) (NM Docket No. 92–291, RM 8133)
Number of Petitions Filed: 1

Subject: Review of the Commissions Rules Governing the Los Power Television Service. (MM Docket No. 93–114)
Number of Petitions Filed: 2

Subject: Amendment of Section 73.202(b), Table of Allotments, FM Broadcast Stations. (Ellison Bay, Wisconsin) (MM Docket No. 93–320, RM–8407)
Number of Petitions Filed: 1

Subject: Implementation of Section 9 of the Communications Act. Assessment and Collection of Regulatory Fees for the 1994 Fiscal Year. (MD Docket No. 94–19)
Number of Petitions Filed: 9

Federal Communications Commission.

William F. Caton,

Acting Secretary.

[FR Doc. 94–19862 Filed 8–12–94; 8:45 am]

BILLING CODE 6712–01–M

FEDERAL MARITIME COMMISSION

[Docket No. 94–18]

Marion L. Balladin v. Liberty Lines Inc. and Southern Express Moving and Shipping; Filing of Complaint and Assignment

Notice is given that a complaint filed by Marion L. Balladin ("Complainant") against Liberty Lines Inc. ("Liberty") and Southern Express Moving and Shipping ("Southern") (collectively referred to as "Respondents") was served August 9, 1994. Complainant alleges that: (1) Respondent Liberty violated section 10(b) (5), (12) and (14) of the Shipping Act of 1984 ("the Act"), 46 U.S.C. app. 1709(b) (5), (12) and (14), by accepting Complainant's household goods for transport from Southern

(allegedly a non-vessel-operating common carrier that was not insured, tariffed, bonded or registered), threatening to auction the contents of the container unless shipping and storage fees were paid, and refusing to speak to Complainant about the container's disposition or allow Complainant to view the contents of the container; and (2) Respondent Southern violated section 23(a) of the Act, 46 U.S.C. app. 1721(a), by failing to be bonded or registered on the date the shipment was picked up.

This proceeding has been assigned to the office of Administrative Law Judges. Hearing in this matter, if any is held, shall commence within the time limitations prescribed in 46 CFR 502.61, and only after consideration has been given by the parties and the presiding officer to the use of alternative forms of dispute resolution. The hearing shall include oral testimony and cross-examination in the discretion of the presiding officer only upon proper showing that there are genuine issues of material fact that cannot be resolved on the basis of sworn statements, affidavits, depositions, or other documents or that the nature of the matter in issue is such that an oral hearing and cross-examination are necessary for the development of an adequate record. Pursuant to the further terms of 46 CFR 502.61, the initial decision of the presiding officer in this proceeding shall be issued by February 9, 1995, and the final decision of the Commission shall be issued by June 9, 1995.

Joseph C. Polking,

Secretary.

[FR Doc. 94–19814 Filed 8–12–94; 8:45 am]

BILLING CODE 6730–01–M

[Fact Finding Investigation No. 21]

Activities of the Trans-Atlantic Agreement and its Members; Hearing in New York Port Area

Pursuant to Commission Order issued July 27, 1994, instituting Fact Finding Investigation No. 21 ("the Fact Finding Order"), notice is hereby given that the Investigative Officers will conduct a hearing concerning various activities and practices by the Trans-Atlantic Agreement ("TAA") and its members which are alleged to be anticompetitive or otherwise violative of the Shipping Act of 1984, 46 U.S.C. app. 1701 *et seq.* The Investigative Officers will take testimony under oath, and receive documents in evidence, as appropriate. In the discretion of the Investigative Officers, portions of this hearing may be conducted in non-public session, as authorized by the Fact Finding Order.

The third round of hearings in Fact Finding Investigation No. 21 will be conducted in the New York/New Jersey Port area, at the following location: Six World Trade Center, Suite 600–D, New York, New York 10048–0949.

The hearings will commence in public session at 9 a.m. on September 12, 1994, and may be conducted on subsequent days at the same location, as appropriate.

Interested persons desiring to testify should contact any of the Investigative Officers designated by the Commission, at the address noted below: Federal Maritime Commission, Bureau of Hearing Counsel, 800 North Capitol Street NW., Washington, DC 20573, Tel: (202) 523–5783, Fax: (202) 523–5785.

Charles L. Haslup, III,

Investigative Officer.

[FR Doc. 94–19868 Filed 8–12–94; 8:45 am]

BILLING CODE 6730–01–M

FEDERAL RESERVE SYSTEM

Agency Forms Under Review

AGENCY: Board of Governors of the Federal Reserve System.

ACTION: Notice.

BACKGROUND: On June 15, 1984, the Office of Management and Budget (OMB) delegated to the Board of Governors of the Federal Reserve System (Board) its approval authority under the Paperwork Reduction Act of 1980, as per 5 CFR 1320.9, to approve of and assign OMB control numbers to collection of information requests and requirements conducted or sponsored by the Board under conditions set forth in 5 CFR 1320.9. Board-approved collections of information will be incorporated into the official OMB inventory of currently approved collections of information. A copy of the SF 83 and supporting statement and the approved collection of information instrument(s) will be placed into OMB's public docket files. The following forms, which are being handled under this delegated authority, have received initial Board approval and are hereby published for comment. At the end of the comment period, the proposed information collection, along with an analysis of comments and recommendations received, will be submitted to the Board for final approval under OMB delegated authority.

DATES: Comments must be submitted on or before September 14, 1994.

ADDRESSES: Comments, which should refer to the OMB Docket number (or Agency form number in the case of a new information collection that has not yet been assigned an OMB number), should be addressed to Mr. William W. Wiles, Secretary, Board of Governors of the Federal Reserve System, 20th and C Streets, NW., Washington, DC 20551, or delivered to the Board's mail room between 8:45 a.m. and 5:15 p.m., and to the security control room outside of those hours. Both the mail room and the security control room are accessible from the courtyard entrance on 20th Street between Constitution Avenue and C Street, NW. Comments received may be inspected in room B–1122 between 9:00 a.m. and 5:00 p.m., except as provided in section 261.8 of the Board's Rules Regarding Availability of Information, 12 CFR 261.8(a).

A copy of the comments may also be submitted to the OMB desk officer for the Board: Milo Sunderhauf, Office of Information and Regulatory Affairs, Office of Management and Budget, New Executive Office Building, Room 3208, Washington, DC 20503.

FOR FURTHER INFORMATION CONTACT: A copy of the proposed form, the request for clearance (SF 83), supporting statement, instructions, and other documents that will be placed into OMB's public docket files once approved may be requested from the agency clearance officer, whose name appears below.

Mary M. McLaughlin, Federal Reserve Board Clearance Officer (202–452–3829), Division of Research and Statistics, Board of Governors of the Federal Reserve System, Washington, DC 20551. For the hearing impaired *only*, Telecommunications Device for the Deaf (TTD) Dorothea Thompson (202–452–3544), Board of Governors of the Federal Reserve System, Washington, DC 20551.

Proposal to approve under OMB delegated authority the extension without revision of the following report(s):

1. *Report title:* Weekly and Monthly Money Market Mutual Fund Asset Reports.

Agency form number: FR 2051a, b, c, and d.

OMB Docket number: 7100–0012.

Frequency: Weekly and Monthly.

Reporters: Money market mutual funds.

Annual reporting hours: 6,027.

Estimated average hours per response: 0.05 (each for FR 2051a and FR 2051d); 0.25 (FR 2051b); 0.15 (FR 2051c).

Number of respondents: 1000 (each for FR 2051a and FR 2051b); 52 (FR 2051c); 8 (FR 2051d).

Small businesses are affected.

General description of report: This information collection is voluntary [12 U.S.C. §§ 353 et seq.] and is given confidential treatment [5 U.S.C. § 552(b)(4)].

SUMMARY: These reports provide information on the assets of money market mutual funds which the Federal Reserve System uses in the construction of the monetary aggregates.

Proposal to approve under OMB delegated authority the extension with revision of the following report(s):

1. *Report title:* Monthly Survey of Selected Deposits and the Annual Supplement to the Monthly Survey of Selected Deposits.

Agency form number: FR 2042 and FR 2042a.

OMB Docket number: 7100–0066.

Frequency: Monthly and annually.

Reporters: Commercial and savings banks.

Annual reporting hours: 6,825.

Estimated average hours per response: 1.00.

Number of respondents: 525.

Small businesses are affected.

General description of report: This information collection is voluntary [12 U.S.C. § 248(a)(2)]. The individual respondent data on amounts outstanding and on interest expense for the various deposit categories are given confidential treatment [5 U.S.C. § 552(b)(4)]. Data on interest rates paid on deposits are made available to the public on request.

SUMMARY: The reports collect detailed information on amounts, offering rates, interest expense, and fees on various types of retail deposits from a stratified sample of BIF-insured commercial and savings banks. The proposed revisions are designed in part to make the data collected more accurately reflect deposit pricing. In addition, other changes are proposed to eliminate items no longer deemed necessary to conducting monetary policy. The Federal Reserve uses data from the FR 2042 and FR 2042a in a number of ways, including construction and interpretation of the monetary aggregates, measuring elasticities in money demand equations, and assessing the changing behavior of banks in pricing deposit accounts.

Board of Governors of the Federal Reserve System, August 9, 1994.

William W. Wiles,

Secretary of the Board.

[FR Doc. 94–19871 Filed 8–12–94; 8:45 am]

BILLING CODE 6210–01–P

Meridian Bancorp, Inc.; Notice of Application to Engage de novo in Permissible Nonbanking Activities

The company listed in this notice has filed an application under § 225.23(a)(1) of the Board's Regulation Y (12 CFR 225.23(a)(1)) for the Board's approval under section 4(c)(8) of the Bank Holding Company Act (12 U.S.C. 1843(c)(8)) and § 225.21(a) of Regulation Y (12 CFR 225.21(a)) to commence or to engage *de novo*, either directly or through a subsidiary, in a nonbanking activity that is listed in § 225.25 of Regulation Y as closely related to banking and permissible for bank holding companies. Unless otherwise noted, such activities will be conducted throughout the United States.

The application is available for immediate inspection at the Federal Reserve Bank indicated. Once the application has been accepted for processing, it will also be available for inspection at the offices of the Board of Governors. Interested persons may express their views in writing on the question whether consummation of the proposal can "reasonably be expected to produce benefits to the public, such as greater convenience, increased competition, or gains in efficiency, that outweigh possible adverse effects, such as undue concentration of resources, decreased or unfair competition, conflicts of interests, or unsound banking practices." Any request for a hearing on this question must be accompanied by a statement of the reasons a written presentation would not suffice in lieu of a hearing, identifying specifically any questions of fact that are in dispute, summarizing the evidence that would be presented at a hearing, and indicating how the party commenting would be aggrieved by approval of the proposal.

Comments regarding the application must be received at the Reserve Bank indicated or the offices of the Board of Governors not later than September 2, 1994.

A. Federal Reserve Bank of Philadelphia (Thomas K. Desch, Vice President) 100 North 6th Street, Philadelphia, Pennsylvania 19105:

1. *Meridian Bancorp, Inc.*, Philadelphia, Pennsylvania; to establish a *de novo* wholly-owned subsidiary named Meridian Commercial Finance Company, Inc., Philadelphia, Pennsylvania, and thereby engage in commercial finance activities, specifically commercial asset-based lending pursuant to § 225.25(b)(1)(iv) of the Board's Regulation Y.

Board of Governors of the Federal Reserve System, August 9, 1994.

Jennifer J. Johnson,

Deputy Secretary of the Board.

[FR Doc. 94-19872 Filed 8-12-94; 8:45 am]

BILLING CODE 6210-01-F

Pikeville National Corporation, et al.; Formations of; Acquisitions by; and Mergers of Bank Holding Companies

The companies listed in this notice have applied for the Board's approval under section 3 of the Bank Holding Company Act (12 U.S.C. 1842) and § 225.14 of the Board's Regulation Y (12 CFR 225.14) to become a bank holding company or to acquire a bank or bank holding company. The factors that are considered in acting on the applications are set forth in section 3(c) of the Act (12 U.S.C. 1842(c)).

Each application is available for immediate inspection at the Federal Reserve Bank indicated. Once the application has been accepted for processing, it will also be available for inspection at the offices of the Board of Governors. Interested persons may express their views in writing to the Reserve Bank or to the offices of the Board of Governors. Any comment on an application that requests a hearing must include a statement of why a written presentation would not suffice in lieu of a hearing, identifying specifically any questions of fact that are in dispute and summarizing the evidence that would be presented at a hearing.

Unless otherwise noted, comments regarding each of these applications must be received not later than September 8, 1994.

A. Federal Reserve Bank of Cleveland (John J. Wixted, Jr., Vice President) 1455 East Sixth Street, Cleveland, Ohio 44101:

1. *Pikeville National Corporation*, Pikeville, Kentucky; to acquire 100 percent of the voting shares of Community Bank of Lexington, Inc., Lexington, Kentucky.

B. Federal Reserve Bank of Richmond (Lloyd W. Bostian, Jr., Senior Vice President) 701 East Byrd Street, Richmond, Virginia 23261:

1. *NationsBank Corporation*, Charlotte, North Carolina; to merge with RHNB Corporation, Rock Hill, South Carolina, and thereby indirectly acquire Rock Hill National Bank, Rock Hill South Carolina.

C. Federal Reserve Bank of Chicago (James A. Bluemle, Vice President) 230 South LaSalle Street, Chicago, Illinois 60690:

1. MBT Corp., Forest City, Iowa; to become a bank holding company by acquiring 100 percent of the voting shares of Manufacturers Bank and Trust Company, Forest City, Iowa.

D. Federal Reserve Bank of St. Louis (Randall C. Sumner, Vice President) 411 Locust Street, St. Louis, Missouri 63166:

1. Community First Financial Group, Inc., English, Indiana; to acquire at least 38.66 percent of the voting shares of Peninsula National Bank, Rolling Hills Estates, California.

2. Union Planters Corporation, Memphis, Tennessee; to acquire 100 percent of the voting shares of Mid South Bancshares, Inc., Paragould, Arkansas, and thereby indirectly acquire Security Bank, Paragould, Arkansas, and Farmers and Merchants Bank, Reyno, Arkansas.

E. Federal Reserve Bank of Minneapolis (James M. Lyon, Vice President) 250 Marquette Avenue, Minneapolis, Minnesota 55480:

1. First Community Bancorp. Inc., Glasgow, Montana; to become a bank holding company by acquiring not less than 90 percent of the voting shares of First Community Bank, Glasgow, Montana.

2. Pequot Area Bancorporation, Inc., Pequot Lakes, Minnesota; to become a bank holding company by acquiring 100 percent of the voting shares of Pequot Lakes State Bank, Pequot Lakes, Minnesota.

Board of Governors of the Federal Reserve System, August 9, 1994.

Jennifer J. Johnson,

Deputy Secretary of the Board.

[FR Doc. 94-19873 Filed 8-12-94; 8:45 am]

BILLING CODE 6210-01-F

GENERAL SERVICES ADMINISTRATION

Information Resources Management Service; North American Telephone Numbering Plan Changes

ACTION: Notice.

The purpose of this notice is to advise Federal departments and agencies that the North American Numbering Plan format for Numbering Plan Area (NPA) Codes will change beginning January 1, 1995. This change is being instituted to address the shortage of area codes. Currently, restrictions require the second digit of area codes to be "1" or "0". The new format will allow any digit from 0–9 to be the second digit. This change will solve the area code shortage, but may require some modifications to telephone systems (e.g., switches, private branch exchanges (PBXs), central exchanges (CENTREXs)), and computer systems (e.g., facsimile machines, automatic dialers, and modems). Additionally, the long term numbering plan proposal includes extending the international numbering plan format from 12 to a maximum of 15 digits, beginning in January 1997.

These major changes will impact existing telephone and computer systems and may require modifications (e.g., changing software telephone numbers, upgrading and/or replacing of software/hardware components, or a combination thereof). Failure to make the required modifications could result in the potential blockage of long distance or international calls to areas where these changes were implemented.

GSA recommends that each Federal department and agency coordinate with their telephone/computer equipment/service provider, vendor, or supplier, to determine if the existing equipment is capable of accommodating the change or if modification is required. If you are receiving service from a GSA consolidated telephone system, GSA will make all the required modification to their equipment. Federal departments and agencies will be responsible for changes to agency-owned or agency-leased equipment and should plan modifications, as appropriate, to minimize disruption of services, costs and potential losses in productivity.

If necessary, Federal departments and agencies can consult with their FTS2000 coordinator or their representative to the Interagency IRM Infrastructure Task Group (IIITG) Local Services Panel (LSP) for additional information. Contact Tanya Carter on (202) 501–0108 or via Internet (tanya.carter@gsa.gov), for the name of your representative.

Dated: July 28, 1994.

Joe M. Thompson,

Commissioner, Information Resources Management Service.

[FR Doc. 94–19838 Filed 8–12–94; 8:45 am]

BILLING CODE 6820–25–M

DEPARTMENT OF HEALTH AND HUMAN SERVICES

Meeting of the Commission on Research Integrity

Pursuant to P.L. 92–463, notice is hereby given of the meeting of the Commission on Research Integrity, on Wednesday, August 31, from 9 a.m. to 5 p.m., in the Crystal Gateway Marriott, 1700 Jefferson Davis Highway, Salon C, Arlington, VA 22202. The meeting will be open to the public.

The mandate of the Commission is to develop recommendations for the Secretary of Health and Human Services and the Congress on the administration of Section 493 of the Public Health Service Act as amended by and added to by Section 161 of the NIH Revitalization Act of 1993.

The purpose of this meeting will be to determine details of the NIH requirement for instruction in the responsible conduct of research for institutional training grants; develop a tentative, detailed structure for the required report of the Commission; and determine topics for research papers and other supporting materials for the report. Discussion items may include but will not be limited to the issues noted above.

Henrietta D. Hyatt-Knorr, Executive Secretary, Commission on Research Integrity, at the Office of Research Integrity, Division of Policy and Education, Rockwall II, Suite 700, 5515 Security Lane, Rockville MD 20852, (301) 443–5300, will furnish the meeting agenda, the Committee charter, and a roster of the Committee members upon request. Members of the public wishing to make presentations should contact the Executive Secretary. Depending on the number of presentations and other considerations, the Executive Secretary will allocate a reasonable time frame for each speaker.

Dated: August 5, 1994.

Lyle W. Bivens,

Director, Office of Research Integrity.

[FR Doc. 94–19812 Filed 8–12–94; 8:45 am]

BILLING CODE 4160–17–M

Office of Consumer Affairs; Statement of Organization, Functions, and Delegations of Authority

This notice amends Part A (Office of the Secretary), Chapter AW (U.S. Office of Consumer Affairs (USOCA)), of the Statement of Organization, Functions and Delegations for the Department of Health and Human Services to reflect a reorganization of the USOCA which realigns the functions assigned to the USOCA's subunits, thus enabling more efficient management of staff and financial resources in the conduct of USOCA programs. Chapter AW (most recently amended at FR 30750–51 on July 5, 1991) is deleted in its entirety and replaced with the following:

Section AW.00 Mission. The U.S. Office of Consumer Affairs executes the functions and responsibilities assigned by Executive Order 11583 of February 24, 1971, (as amended by Executive Order 11595 of May 26, 1971, and Executive Order 11702 of January 25, 1973) and Executive Order 11566 of October 26, 1970; advises the President

on consumer affairs; and coordinates consumer-related functions in the Executive Branch of the Federal government. In accordance with Executive Order 12160 of September 26, 1979, the office provides assistance to the Chairperson of the Consumer Affairs Council.

Section AW.10 Organization. A. The Director of the U.S. Office of Consumer Affairs reports directly to the President and directs and coordinates the activities of the U.S. Office of Consumer Affairs.

B. The U.S. Office of Consumer Affairs consists of the following components:

Office of the Director
Division of Legislative Affairs and Administration
Division of Communications
Division of Policy and Intergovernmental Relations
Division of Public Liaison

Section AW.20 Functions. A. U.S. Office of Consumer Affairs. (1) Works to ensure appropriate consideration of consumer perspective in policy development at the White House and Federal agencies. The Director also coordinates Federal consumer policy through the Consumer Affairs Council, composed of all Federal agencies providing consumer programs, under authority of Executive Order 12160. (2) Publishes the Consumer's Resource Handbook and other documents distributed upon request to millions of Americans through the Consumer Information Center. These publications advise individuals how to avoid marketplace problems and how to resolve questions or complaints if they do arise. (3) Promotes cooperation among international, Federal, state, local, nonprofit, and private sector entities involved in the marketplace, emphasizing the need for ethical business practices, regulation and legislation where needed and appropriate, and voluntary efforts to promote consumer interests through education, dispute resolution and policy coordination. The Director chairs the delegation from the United States to the Committee on Consumer Policy of the Organization for Economic Cooperation and Development, at which international marketplace principles are harmonized. (4) Promotes improved consumer skills through education programs which emphasize practical application of skills learned in elementary, secondary and post-secondary schools, as well as public and private sector programs which target specific consumer issues to be addressed by media information campaigns, workshops, fact sheets and other publications. (5) Identifies, analyzes and focuses attention on needs, interests and marketplace problems of consumers by conducting surveys, conferences, and working groups, both independently and in conjunction with other government agencies, nonprofit organizations, and the private sector.

B. Office of the Director. Directs and coordinates the activities of the U.S. Office of Consumer Affairs.

C. Division of Legislative Affairs and Administration. Participates in the design and enactment of the President's consumer legislative program, including preparation of congressional testimony and serving as Congressional liaison; prepares and reviews materials for presentation to Federal Departments and Agencies; reviews and prepares comments on proposed Federal regulations; develops comprehensive plans for programs of USOCA and develops and implements systems to evaluate staff effectiveness. Recommends and applies administrative policy and procedures; performs activities of USOCA in the areas of financial management, procurement, personnel and record keeping; and provides advice and recommendations to the Director on alternatives to achieve USOCA program objectives.

D. Division of Communications. Has primary responsibility for USOCA relations with the media. Prepares and distributes newsletters and other USOCA consumer information and education materials, including the Consumer's Resource Handbook. Prepares articles and programs for both print and electronic media; and designs programs for disseminating important consumer information to the public.

E. Division of Policy and Intergovernmental Relations. Maintains liaison with Federal, state, county, and city government officials responsible for consumer matters. Researches, develops and prepares speeches for delivery by the Director. Performs research for and prepares "White Papers" on policy matters for the Director. Provides support for the Director in role as member of White House policy staff. Monitors ongoing programs and emerging issues in Federal agencies affecting consumers, with a view to determining the effectiveness of current and proposed programs; provides staff assistance to the Director while serving in the capacity of Chairperson of the Consumer Affairs Council; and maintains liaison with representatives of other nations, particularly within the framework of the Committee on Consumer Policy of the Organization for Economic Cooperation and Development.

F. Division of Public Liaison. Serves as focal point for liaison with individual consumers and with national, state and local voluntary organizations which represent consumers and citizens; provides adequate opportunities for consumer participation in the decision making process; maintains liaison with trade associations and industry as necessary, including encouraging initiation of programs aimed at resolving complaints common to large numbers of consumers; encourages private industry voluntarily to develop self-regulatory programs and to adopt competitive policies and programs; conceives and facilitates implementation of programs to enhance consumer knowledge through the efforts of government, business, voluntary groups and individual citizens; and serves as the principal USOCA unit responsible for development and coordination of conferences and meetings on consumer matters. Conducts National Consumers Week planning and coordination.

Section AW.30 Order of Succession. In the absence or incapacity of the Director, the Deputy Director shall act as Director, USOCA.

Section AW.40 Delegations of Authority. The exercise of authority and duties of the Director, USOCA are set forth in the Executive Orders cited in Section AW.00, above. Authority is exercised under Executive Order 11583 through the staff of the U.S. Office of Consumer Affairs and under Executive Order 12160 through the Consumer Affairs Council comprised of representatives of Federal departments and agencies.

Dated: August 1, 1994.

Donna E. Shalala,

Secretary.

[FR Doc. 19813 Filed 8–12–94; 8:45 am]

BILLING CODE 4190–04–M

Agency for Toxic Substances and Disease Registry

[Announcement 498]

A Research Program on the Public Health Assessment of Toxic Interactions for Chemical Mixtures

Introduction

The Agency for Toxic Substances and Disease Registry (ATSDR) announces the availability of fiscal year (FY) 1994 funds for a cooperative agreement to initiate a research program to develop methods to determine the health effects of hazardous substances in combination

with other substances with which they are commonly found at Comprehensive Environmental Response, Compensation, and Liability Act (CERCLA) hazardous substance releases and facilities. Such combinations will be referred to as "chemical mixtures." The objective of this program is to develop methods of toxicity assessment for populations that live in the vicinity of hazardous substance releases and facilities who are exposed to chemical mixtures.

The Public Health Service (PHS) is committed to achieving the health promotion and disease prevention objectives of "Healthy People 2000," a PHS-led national activity to reduce morbidity and mortality and improve the quality of life. This announcement is related to the priority areas of Environmental Health, Surveillance and Data Systems, and Occupational Safety and Health. (For ordering a copy of "Healthy People 2000," see the Section Where to Obtain Additional Information.)

Authority

This program is authorized under Sections 104(i) 5(A) and (15) of the Comprehensive Environmental Response, Compensation, and Liability Act (CERCLA) as amended by the Superfund Amendments and Reauthorization Act (SARA) of 1986 (42 U.S.C. 9604(i) 5(A) and (15)).

Smoke-Free Workplace

The Public Health Service strongly encourages all grant recipients to provide a smoke-free workplace and promote the non-use of all tobacco products. This is consistent with the PHS mission to protect and advance the physical and mental health of the American people.

Eligible Applicant

Eligible applicants are the official public health agencies of the States or their bona fide agents or instrumentalities. This includes the District of Columbia, American Samoa, the Commonwealth of Puerto Rico, the Virgin Islands, the Federated States of Micronesia, Guam, the Northern Mariana Islands, the Republic of the Marshall Islands, the Republic of Palau, and federally recognized Indian tribal governments. State organizations, including State universities, State colleges, and State research institutions, must affirmatively establish that they meet their respective State's legislative definition of a State entity or political subdivision to be considered an eligible applicant.

Availability of Funds

Approximately $150,000 will be available in FY 1994 to fund this program. The award is expected to begin on or about September 30, 1994, for a 12-month budget period within a project period of 3 years. Continuation awards within the project period will be made on the basis of satisfactory progress and availability of funds. The funding estimate above may vary and is subject to change.

Purpose

The purpose of this program to develop methods for the assessment of health effects of chemical mixtures found at hazardous substance releases and facilities to: (1) Identify environmental chemical mixtures that impact public health, (2) evaluate the potential for exposure of human populations to chemical mixtures, (3) study the pharmacokinetic behavior of chemical mixtures, (4) study the various endpoints that would be affected and the target organs that would be impacted, (5) study the mechanisms of action, progression and repair of the injury caused by chemical mixtures, (6) identify biomarkers (specific and generic) that would allow the determination of the health of an organism, (7) develop qualitative and quantitative health assessment methods for chemical mixtures, and (8) develop methods for assessments of multiple health effects.

Program Requirements

ATSDR will provide financial assistance for developing assessment methods and/or conduct of experimental animal research. The objective of the assessment component is to solve the immediate problems posed to the Agency while the research component allows the development of generic guidance for chemical mixtures through a long term plan. Both of these activities are necessary and complementary for the successful development of a viable research program. This research program for chemical mixtures would improve the knowledge base on the linkage between the uptake of hazardous substances and their health consequences, and reduce the uncertainties in the public health assessments performed at hazardous substance releases and facilities.

In conducting activities to achieve the objectives of this program, the recipient will be responsible for the activities listed under A., below, and ATSDR will be responsible for conducting activities listed under B., below:

A. Recipient Activities

1. Develop a detailed program of research to investigate toxic interactions of chemical mixtures found at hazardous substance releases and facilities based on the specific areas listed in the purpose of this announcement.

2. Establish and maintain a research plan and system for collecting information.

3. Periodically hold workshops or symposia to exchange current information, opinions and research findings on mixtures.

B. ATSDR Activities

1. Provide consultative, administrative and technical assistance, as needed, in the development of the program of research activities for the enhancement of identified disciplinary areas.

2. Collaborate with the recipient in the establishment of a research plan and system for collecting data and developing periodic reports on activity.

3. Collaborate on the preparation of reports and briefing materials on a timely basis to assist recipient in presenting and writing publications including abstracts, and journal articles.

4. Participate and collaborate with the applicant in planning workshops or symposia to exchange current information, opinions, and research findings on mixtures.

Evaluation Criteria

Applications will be reviewed and evaluated for scientific and technical merit according to the following criteria:

A. Scientific and Technical Review Criteria of New Applications

1. Appropriateness and Knowledge of Study Design—25%

The extent to which the applicant's proposal addresses: (a) Rationale for the proposed study design; (b) a plan for exposure assessment and/or a plan for evaluating adverse health outcomes; and (c) a detailed plan for analysis of the data.

2. Proposed Study—25%

The adequacy of the proposal relevant to: (a) The study purpose, objectives, and rationale; (b) the quality of program objectives in terms of specificity, measurability, and feasibility; (c) the specificity and feasibility of the applicant's timetable for implementing program activities and timely completion of the study; and (d) the likelihood of the applicant completing proposed program activities and attaining proposed objectives based on

the thoroughness and clarity of the overall program.

3. Relationship to Initiative—15%

The extent to which the application addresses the areas of investigation outlined by ATSDR.

4. Quality of Data of Data Collection—15%

The extent to which: (a) the study ascertains the information necessary to meet the objectives, including (but not limited to) information on pathways of exposure, confounding factors, and biomedical testing; (b) the quality control and quality assurance of questionnaire data are provided, including (but not limited to) interviewer training and consistency checks of data; (c) the laboratory tests (if applicable) are sensitive and specific for the chemical or disease outcome of interest; and (d) the quality control, quality assurance, precision and accuracy of information for the proposed tests are provided and acceptable.

5. Applicant Capability and Coordination Efforts—10%

The extent to which the proposal has described: (a) the capability of the applicant's administrative structure to foster successful scientific and administrative management of a study; (b) the capability of the applicant to demonstrate an appropriate plan for interaction with the community; and (c) the suitability of facilities and equipment available.

6. Program Personnel—10%

The extent to which the proposed program staff is qualified and appropriate, and the time allocated for them to accomplish program activities is adequate.

7. Program Budget—(Not scored)

The extent to which the budget is reasonable, clearly justified, and consistent with intended use of cooperative agreement/grant funds.

B. Review of Continuation Applications

Continuation awards within the project period will be made on the basis of the following criteria:

1. Satisfactory progress has been made in meeting project objectives;

2. Objectives for the new budget period are realistic, specific, and measurable;

3. Proposed changes in described long-term objectives, methods of operation, need for grant support, and/or evaluation procedures will lead to achievement of project objectives; and

4. The budget request is clearly justified and consistent with the intended use of grant funds.

Executive Order 12372

Applications are subject to the Intergovernmental Review of Federal Programs as governed by Executive Order (E.O.) 12372. E.O. 12372 sets up a system for State and local government review of proposed Federal assistance applications. Applicants (other than federally recognized Indian tribal governments) should contact their State Single Point of Contact (SPOC) as early as possible to alert them to the prospective applications and receive any necessary instructions on the State process. For proposed projects serving more than one State, the applicant is advised to contact the SPOC for each affected State. A current list of SPOCs is included in the application kit. If SPOCs have any State process recommendations on applications submitted to CDC, they should forward them to Henry S. Cassell, III, Grants Management Officer, Grants Management Branch, Procurement and Grants Office, Centers for Disease Control and Prevention (CDC), 255 East Paces Ferry Road, NE., Room 300, Mailstop E–13, Atlanta, Georgia 30305, no later than 30 days after the application deadline. (A waiver for the 60-day requirement has been requested.) Since the funding for this program was received late in the fiscal year, time will not permit a 60-day State recommendation process. The granting agency does not guarantee to "accommodate or explain" State process recommendations it receives after that date.

Indian tribes are strongly encouraged to request tribal government review of the proposed application. If tribal governments have any tribal process recommendations on applications submitted to CDC, they should forward them to Henry S. Cassell, III, Grants Management Officer, Grants Management Branch, Procurement and Grants Office, Centers for Disease Control and Prevention (CDC), 255 East Paces Ferry Road, NE., Room 300, Mailstop E–13, Atlanta, Georgia 30305, no later than 30 days after the application deadline. The granting agency does not guarantee to "accommodate or explain" for tribal process recommendations it receives after that date. (By formal agreement, the CDC Procurement and Grants Office will act on behalf of and for ATSDR on this matter.)

Public Health System Reporting Requirements

This program is not subject to the Public Health System Reporting Requirements.

Catalog of Federal Domestic Assistance Number

The Catalog of Federal Domestic Assistance Number is 93.161.

Other Requirements

A. Third Party Agreements

Project activities which are approved for contracting pursuant to the prior approval provisions shall be formalized in a written agreement that clearly establishes the relationship between the grantee and the third party. The written agreement shall, at a minimum:

1. State or incorporate by reference all applicable requirements imposed on the contractors under the grant by the terms of the grant, including requirements concerning technical review (ATSDR selected reviewers), release of data, ownership of data, and the arrangement for copyright when publications, data or other copyrightable works are developed under or in the course of work under a PHS grant supported project or activity.

2. State that any copyrighted or copyrightable works shall be subject to a royalty-free, nonexclusive, and irrevocable license to the government to reproduce, publish, or otherwise use them, and to authorize others to do so for Federal government purposes.

3. State that whenever any work subject to this copyright policy may be developed in the course of a grant by a contractor under a grant, the written agreement (contract) must require the contractor to comply with these requirements and can in no way diminish the government's right in that work.

4. State the activities to be performed, the time schedule for those activities, the policies and procedures to be followed in carrying out the agreement, and the maximum amount of money for which the grantee may become liable to the third party under the agreement.

5. The written agreement required shall not relieve the grantee of any part of its responsibility or accountability to PHS under the grant. The agreement shall, therefore, retain sufficient rights and control to the grantee to enable it to fulfill this responsibility and accountability.

B. Animal Subjects

If the proposed project involves research on animal subjects, the applicant must comply with the "PHS

Policy on Humane Care and Use of Laboratory Animals by Awardee Institutions." An applicant organization proposing to use vertebrate animals in PHS-supported activities must file an Animal Welfare Assurance with the Office for Protection from Research Risks at the National Institutes of Health.

Application Submission Deadline

The original and two copies of the application Form PHS 5161–1 must be submitted to Henry S. Cassell, III, Grants Management Officer, Grants Management Branch, Procurement and Grants Office, Centers for Disease Control and Prevention (CDC), 255 East Paces Ferry Road, NE., Room 300, Mail Stop E–13, Atlanta, Georgia 30305, on or before September 15, 1994. (By formal agreement, the CDC Procurement and Grants Office will act on behalf of and for ATSDR on this matter.)

A. Deadline

Applications shall be considered as meeting the deadline if they are either:

1. Received on or before the deadline date, or

2. Sent on or before the deadline date and received in time for submission to the objective review group. (Applicants must request a legibly dated U.S. Postal Service postmark or obtain a legibly dated receipt from a commercial carrier or U.S. Postal Service. Private metered postmarks shall not be acceptable as proof of timely mailing).

B. Late Applications

Applications which do not meet the criteria in A.1. or A.2. above are considered late applications. Late applications will not be considered in the current competition and will be returned to the applicant.

Where to Obtain Additional Information

Additional information on application procedures, copies of application forms, other material, and business management assistance may be obtained from Georgia Jang, Grants Management Specialist, Grants Management Branch, Procurement and Grants Office, Centers for Disease Control and Prevention (CDC), 255 East Paces Ferry Road, NE., Mail Stop E–13, Atlanta, Georgia 30305, telephone (404) 842–6630. Programmatic assistance may be obtained from Dr. Moiz Mumtaz, Project Officer, Division of Toxicology, Agency for Toxic Substances and Disease Registry, 1600 Clifton Road, NE., Mail Stop E–29, Atlanta, Georgia 30333, telephone (404) 639–6306.

Please refer to Announcement 498 when requesting information and submitting an application.

Potential applicants may obtain a copy of "Healthy People 2000" (Full Report, Stock No. 017–001–00474–0) or "Healthy People 2000" (Summary Report, Stock No. 017–001–00473–1) through the Superintendent of Documents, Government Printing Office, Washington, DC 20402–9325, telephone (202) 783–3238.

Dated: August 10, 1994.

Claire V. Broome,

Deputy Administrator, Agency for Toxic Substances and Disease Registry.

[FR Doc. 94–20000 Filed 8–12–94; 8:45 am]

BILLING CODE 4163–70–P

Centers for Disease Control and Prevention

[CDC–429]

Cooperative Agreement With the Washington State Department of Health for Hanford Radiation Health Studies Availability of Funds for Fiscal Year 1994

Summary

The Centers for Disease Control and Prevention (CDC) announces the availability of fiscal year (FY) 1994 funds for a sole source cooperative agreement with the Washington State Department of Health to provide technical and administrative services in support of ongoing and future CDC health related activities associated with the Hanford Nuclear Reservation. Approximately $200,000 will be available in FY 1994 to support this project. It is expected that the award will begin on or about September 1, 1994, and will be awarded for a 12-month budget period within a project period of up to 3 years. Funding estimates may vary and are subject to change. Continuation awards within the project period will be made on the basis of satisfactory progress and the availability of funds.

The purpose of this cooperative agreement is to support work which must be undertaken by the Washington State Department of Health in coordinating and performing follow-up activities resulting from the release of the Hanford Environmental Dose Reconstruction (HEDR) Project results.

CDC will provide guidance on program management and administrative matters; assist in developing an individual dose assessment capability including the selection and purchase of appropriate computer hardware; provide appropriate training and technical assistance in the operation of the HEDR dose computer codes; provide information on new developments related to Hanford health studies; and provide other appropriate technical assistance required to perform the activities associated with this project.

The Public Health Service (PHS) is committed to achieving the health promotion and disease prevention objectives of "Healthy People 2000," a PHS-led national activity to reduce morbidity and mortality and improve the quality of life. This announcement is related to the priority area of Environmental Health. (For ordering a copy of "Healthy People 2000," see the Section "Where to Obtain Additional Information.")

Authority

This program is authorized under the Public Health Service Act, Section 301(a) [42 U.S.C. 241(a)], as amended.

Smoke-Free Workplace

The Public Health Service strongly encourages all grant recipients to provide a smoke-free workplace and promote the non-use of all tobacco products. This is consistent with the PHS mission to protect and advance the physical and mental health of the American people.

Eligible Applicant

Assistance will be provided only to the Washington State Department of Health. No other applications are solicited. The Program Announcement and application kit have been sent to the Washington State Department of Health.

The Washington State Department of Health is the most appropriate organization to conduct the work under this cooperative agreement because:

1. The Hanford Nuclear Reservation is located in Washington State. Historic radiation releases from the site exposed large numbers of Washington citizens who continue to raise questions about possible health effects. The Washington State Department of Health has primary responsibility for responding to these concerns.

2. The health departments of Idaho and Oregon have endorsed the plan for the Washington State Department of Health to assume the lead role in coordinating Hanford health related activities within the region.

Executive Order 12372 Review

This application is not subject to review by Executive Order 12372, Intergovernmental Review of Federal Programs.

Public Health System Reporting Requirements

This program is not subject to the Public Health System Reporting Requirements.

Catalog of Federal Domestic Assistance Number

The Catalog of Federal Domestic Assistance number for this project is 93.283.

Other Requirements

Paperwork Reduction Act

Projects involving the collection of information from 10 or more individuals and funded by the cooperative agreement will be subject to review by the Office of Management and Budget (OMB) under the Paperwork Reduction Act.

Where to Obtain Additional Information

If you are interested in obtaining additional information regarding this program, please refer to Announcement Number 429 and contact Georgia Jang, Grants Management Specialist, Grants Management Branch, Procurement and Grants Office, Centers for Disease Control and Prevention (CDC), 255 East Paces Ferry Road, NE., Room 300, Atlanta, Georgia 30305, telephone (404) 842–6630.

A copy of "Healthy People 2000" (Full Report, Stock No. 017–001–00474–0) or "Healthy People 2000" (Summary Report, Stock No. 017–001–00473–1) referenced in the "SUMMARY" may be obtained through the Superintendent of Documents, Government Printing Office, Washington, DC 20402–9325, telephone (202) 783–3238.

Dated: August 5, 1994.

Joseph R. Carter,

Acting Associate Director for Management and Operations, Centers for Disease Control and Prevention (CDC).

[FR Doc. 94–19854 Filed 8–12–94; 8:45 am]

BILLING CODE 4163–18–P

[CDC–495]

Cooperative Agreement to the American Academy of Dermatology to Provide Technical Assistance in Skin Cancer Prevention

SUMMARY: The Centers for Disease Control and Prevention (CDC) announces the availability of fiscal year (FY) 1994 funds for a sole source cooperative agreement with the American Academy of Dermatology (AAD) to provide technical assistance in state-of-the-art skin cancer prevention. Approximately $100,000 is available in FY 1994 to fund this award. It is expected that the award will begin on or about September 30, 1994, and will be for a 12-month budget period within a project period of up to 3 years. This funding estimate may vary and is subject to change. Continuation awards within the project period will be made on the basis of satisfactory progress and availability of funds.

The purpose of this cooperative agreement is to supplement and support State and other skin cancer prevention initiatives by providing technical assistance in state-of-the-art skin cancer prevention. Technical assistance may include guidance for State health departments that are funded to conduct skin cancer prevention demonstration projects; participation in the design, development, demonstration, and evaluation of health-care professional education and training strategies; and guidance in developing public health initiatives, such as a national agenda for skin cancer prevention and early detection.

The CDC will collaborate in the development of: salient educational messages; skin cancer prevention educational strategies for disseminatiion to the public; linkages with States, the public, and health-care providers to disseminate consistent skin cancer prevention messages; primary and secondary educational and training programs for health-care providers; and, CDC will plan and coordinate at least two annual meetings. CDC will also facilitate and assist in the development of a national strategy for the prevention and early detection of skin cancer.

The Public Health Service (PHS) is committed to achieving the health promotion and disease prevention objectives of "Healthy People 2000," a PHS-led national activity to reduce morbidity and mortality and to improve the quality of life. This announcement is related to the priority area of Cancer. (To order a copy of "Healthy People 2000," see the section "Where To Obtain Additional Information.")

Authority

This program is authorized under Sections 301(a) and 317(k)(2) of the Public Health Service Act, as amended [42 U.S.C. 241(a), 247b(k)(2)]. Applicable program regulations are found in 42 CFR Part 51b—Project Grants for Preventive Health Services.

Smoke-Free Workplace

The Public Health Service strongly encourages all grant recipients to provide a smoke-free workplace and promote the nonuse of tobacco products. This is consistent with the PHS mission to protect and advance the physical and mental health of the American people.

Eligible Applicant

Assistance will be provided only to AAD. No other applications are solicited. The Program Announcement and the application kit have been sent to AAD.

Eligibility is limited to AAD because, as an internationally recognized professional organization of approximately 10,000 dermatologists, the membership is composed of individuals grounded in scientific expertise, clinical proficiency, and research in disorders of the skin, including cancer. For several years, AAD has conducted free skin examinations and collected data from over half of a million Americans during the annual AAD National Melanoma/Skin Cancer Detection and Prevention campaign. Solely owned by AAD and perhaps the largest in the world, the AAD skin cancer screening database includes information regarding skin cancer risk factors, behaviors, and screening results of at-risk populations. Ongoing analysis and information from this database can be used to formulate and develop educational strategies and provide technical assistance.

The AAD is the nation's largest and only medical organization that represents a broad-based constituency of scientific dermatology experts who are currently involved in multiple activities that relate to the prevention and early detection of skin cancer. AAD has a track record of capability in addressing educational issues that can positively impact upon skin cancer knowledge among health care professionals and the public. They actively provide public education through the use of a variety of health education messages disseminated to groups of all ages. Further, AAD's strategic plan includes goals that address public education, media relations, environmental issues, policy development, and research. Although there are two other professional dermatology organizations, they have smaller memberships and they specifically focus on research and surgery, as opposed to the broad educational efforts of AAD.

AAD's strategic plan commits them to play a major role in formulating socioeconomic policies and educational interventions that influence dermatologic care by: (1) promoting and advancing the art and science of skin care; (2) promoting optimal standards in clinical practice, education, and research; and (3) supporting and enhancing patient care, patient

education, and public interest in skin care. AAD's strategic plan includes goals that address public education, media relations, environmental issues, policy development, and research.

Among their many outreach efforts, AAD has collaborated with the American Cancer Society (ACS) to develop a kindergarten through third grade curriculum for use in the school system and with the American Academy of Pediatrics (AAP) on the development of a "New Mothers" pamphlet intended to educate mothers about how to protect their infants from overexposure to the sun's harmful rays. They have also prepared an intervention for young children entitled Joel Mole, and Public Service Announcements advocating skin cancer prevention. AAD members conduct research that results in scientific publications related to skin cancer, serve on key advisory panels that address issues related to skin cancer/melanoma early detection and control, and they have participated in the development of Australia's premier program: Melanoma Control: Prevention and Early Detection.

AAD's membership represents academia, private practice, and research. The majority of their membership is board-certified and solely capable of analyzing, advising, and fulfilling liaison responsibilities necessary to effectively carry out the activities detailed in this program. AAD is uniquely qualified to provide supplemental and supportive technical assistance to the States regarding the science of skin disorders, particularly related to cancer, and the preventive measures that can be taken to avoid morbidity and mortality from the development of skin cancer. No other organization possesses as comprehensive a list of dermatologists, with as wide a range of abilities; or controls as large a screening database; or performs the variety of roles that AAD does. Therefore, AAD is the only organization with the unique characteristics to perform this cooperative agreement.

Executive Order 12372 Review

This program is not subject to Executive Order 12372 review.

Public Health System Reporting Requirements

This program is not subject to the Public Health System Reporting Requirements.

Catalog of Federal Domestic Assistance Number

The Catalog of Federal Domestic Assistance Number is 93.283.

Where to Obtain Additional Information

If you are interested in obtaining additional information regarding this project, please refer to Announcement 495 and contact Locke Thompson, Grants Management Specialist, Grants Management Branch, Procurement and Grants Office, Centers for Disease Control and Prevention (CDC), 255 East Paces Ferry Road, NE., Room 314, Mail Stop E–18, Atlanta, GA 30305, telephone (404) 842–6595.

A copy of "Healthy People 2000" (Full Report: Stock No. 017–001–00474–0) or "Healthy People 2000" (Summary Report: Stock No. 017–001–00473–1) referenced in the "Summary" may be obtained through the Superintendent of Documents, Government Printing Office, Washington, DC 20402–9325, telephone (202) 783–3238.

Dated: August 5, 1994.

Joseph R. Carter,

Acting Associate Director for Management and Operations, Centers for Disease Control and Prevention (CDC).

[FR Doc. 94–19855 Filed 8–12–94; 8:45 am]

BILLING CODE 4163–18–P

Food and Drug Administration

[Docket No. 94F–0283]

Vanetta (U.S.A.) Inc.; Filing of Food Additive Petition (Animal Use)

AGENCY: Food and Drug Administration, HHS.

ACTION: Notice.

SUMMARY: The Food and Drug Administration (FDA) is announcing that Vanetta (U.S.A.) Inc., has filed a petition proposing that the food additive regulations be amended to provide for the safe use of menadione nicotinamide bisulfite as a source of vitamin K and niacin in poultry feed when used at the rate of 2 grams per ton of complete feed.

DATES: Written comments on the petitioner's environmental assessment by October 31, 1994.

ADDRESSES: Submit written comments to the Dockets Management Branch (HFA–305), Food and Drug Administration, rm. 1–23, 12420 Parklawn Dr., Rockville, MD 20857.

FOR FURTHER INFORMATION CONTACT: Woodrow M. Knight, Center for Veterinary Medicine (HFV–226), Food and Drug Administration, 7500 Standish Pl., Rockville, MD 20855, 301–594–1731.

SUPPLEMENTARY INFORMATION: Under the Federal Food, Drug, and Cosmetic Act (sec. 409(b)(5) (21 U.S.C. 348(b)(5))), notice is given that a food additive petition (FAP 2228) has been filed by Vanetta (U.S.A.) Inc., 1770 East Market St., York, PA 17402. The petition proposes to amend the food additive regulations to provide for the safe use of menadione nicotinamide bisulfite as a source of vitamin K and niacin in poultry feed when used at the rate of 2 grams per ton of complete feed.

The potential environmental impact of this action is being reviewed. To encourage public participation consistent with regulations promulgated under the National Environmental Policy Act (40 CFR 1501.4(b)), the agency is placing the environmental assessment submitted with the petition that is the subject of this notice on public display at the Dockets Management Branch (address above) for public review and comment. Interested persons may, on or before October 31, 1994, submit to the Dockets Management Branch (address above) written comments. Two copies of any comments are to be submitted, except that individuals may submit one copy. Comments are to be identified with the docket number found in brackets in the heading of this document. Received comments may be seen in the office above between 9 a.m. and 4 p.m., Monday through Friday. FDA will also place on public display any amendments to, or comments on, the petitioner's environmental assessment without further announcement in the **Federal Register**. If based on its review, the agency finds that an environmental impact statement is not required and this petition results in a regulation, the notice of availability of the agency's findings of no significant impact and the evidence supporting that finding will be published with the regulation in the **Federal Register** in accordance with 21 CFR 25.40(c).

Dated: August 3, 1994.

Stephen F. Sundlof,

Director, Center for Veterinary Medicine.

[FR Doc. 94–19808 Filed 8–12–94; 8:45 am]

BILLING CODE 4160–01–F

Clinical Studies of Safety and Effectiveness of Orphan Products; Availability of Grants; Request for Applications

AGENCY: Food and Drug Administration, HHS.

ACTION: Notice.

SUMMARY: The Food and Drug Administration (FDA) is announcing the following changes to its Orphan Products Development (OPD) grant program. Previously, the OPD program consisted of two separate requests for

applications (RFA's) published simultaneously with one receipt date for all applications. These two RFA's are now combined into one notice with two receipt dates each year. Previously, announcements were published in the **Federal Register** annually. From now on, a notice will be published annually in the **Federal Register** referencing this announcement.The notice will remind eligible applicants of the receipt dates, the estimated amount of funds available, the estimated number of awards to be made in that fiscal year (FY), and any changes in programmatic requirements or criteria.

DATES: Application receipt dates are October 1, 1994, and January 15, 1995. If the receipt date falls on a weekend, it will be extended to Monday; if the date falls on a holiday, it will be extended to the following work day.

ADDRESSES: Application forms are available from, and completed applications should be submitted to: Robert L. Robins, Grants Management Officer, Grants and Agreements Management Branch (HFA–520), Food and Drug Administration, Park Bldg., rm. 3–40, 5600 Fishers Lane, Rockville, MD 20857, 301–443–6170.

Note: Applications hand-carried or commercially delivered should be addressed to the Park Bldg., rm. 3–40, 12420 Parklawn Dr., Rockville, MD 20857. Do not send applications to the Division of Research Grants, National Institutes of Health (NIH).

FOR FURTHER INFORMATION CONTACT:

Regarding the administrative and financial management aspects of this notice: Robert L. Robins (address above).

Regarding the programmatic aspects of this notice: Carol A. Wetmore or Patricia R. Robuck, Office of Orphan Products Development (HF–35), Food and Drug Administration, 5600 Fishers Lane, rm. 8–73, Rockville, MD 20857, 301–443–4903.

SUPPLEMENTARY INFORMATION: FDA is announcing the anticipated availability of funds for FY 1995 for awarding grants to support clinical trials on safety and effectiveness of products for rare diseases and conditions (i.e., those affecting fewer than 200,000 people in the United States). Contingent on availability of FY 1995 funds, it is anticipated that $12 million will be available, of which $6.2 million will be for noncompeting continuation awards. This will leave $5.8 million for funding the following: Approximately $2.9 million for 20 grants (phase 1, 2, or 3 trials) up to $100,000 each in direct costs per annum plus applicable indirect costs for up to 3 years, and approximately $2.9 million for 10 grants (phase 2 and 3 trials only) up to $200,000 each in direct costs per annum plus applicable indirect costs for up to 2 years. Applications exceeding this direct cost limit will be considered nonresponsive and will be returned to the applicant. The current, active investigational new drug (IND) or investigational device exemption (IDE) number for the proposed study must appear on the face page of the application with the title of the project.

FDA will support the clinical studies covered by this notice under section 301 of the Public Health Service Act (the PHS act) (42 U.S.C. 241). FDA's research program is described in the Catalog of Federal Domestic Assistance, No. 93.103.

The Public Health Service (PHS) strongly encourages all grant recipients to provide a smoke-free work place and promote the non-use of all tobacco products. This is consistent with the PHS mission to protect and advance the physical and mental health of the American people.

PHS urges applicants to submit work plans that address specific objectives of "Healthy People 2000." Potential applicants may obtain a copy of "Healthy People 2000" (Full Report, stock no. 017–001–00474–0) or "Healthy People 2000" (Summary Report, stock no. 017–001–00473–1) through the Superintendent of Documents, Government Printing Office, Washington, DC 20402–9325, 202–783–3238.

PHS policy is that applicants for PHS clinical research grants are required to include minorities and women in study populations so that research findings can be of benefit to all persons at risk of the disease, disorder, or condition under study; special emphasis must be placed on the need for inclusion of minorities and women in studies of diseases, disorders, and conditions which disproportionately affect them. This policy is intended to apply to males and females of all ages. If women or minorities are excluded or inadequately represented in clinical research, particularly in proposed population-based studies, a clear compelling rationale must be provided.

I. Program Research Goals

OPD was established to identify and facilitate the availability of orphan products. In the OPD grants program, orphan products are defined as drugs, biologics, medical devices, and foods for medical purposes which are indicated for a rare disease or condition (i.e., a prevalence, not incidence, of fewer than 200,000 people in the United States). Diagnostic tests will qualify only if the U.S. population to be screened for the disorder is fewer than 200,000.

One way to make orphan products available is to support clinical research to determine whether the products are safe and effective. All funded studies are subject to the requirements of the Federal Food, Drug, and Cosmetic Act (the act) and regulations promulgated thereunder. The grants are funded under the legislative authority of section 301 of the PHS Act.

The goal of FDA's OPD grants program is to encourage clinical development of products for use in rare diseases or conditions where no current therapy exists, where current therapy would be improved, and/or where pivotal clinical trials would occur. In furtherance of this goal, FDA provides grants to conduct clinical studies intended to provide data acceptable to the agency which will either result in or substantially contribute to approval of these products. Applicants should keep this goal in mind and must include an explanation in the "Description" section of the application of how their proposed study will either facilitate product approval or provide essential data needed for product development. The application will be considered nonresponsive without this explanation in the "Description" section. Information regarding meetings and/or discussions with FDA reviewing division staff about development of the product to be studied should also be provided in the application. This information is extremely important for the review process.

Except for medical foods that do not require premarket approval, FDA will only consider awarding grants to support clinical studies for determining whether the products are safe and effective for premarket approval under the act (21 U.S.C. 301 et seq.) or under section 351 of the PHS Act (42 U.S.C. 262). In most cases, preliminary clinical research suggesting effectiveness and relative safety will already be available. Studies of already approved products evaluating new orphan indications are also acceptable and are required to have an IND or IDE for new labeling purposes.

Studies submitted for the larger grants ($200,000) must be continuing in phase 2 or phase 3 of investigation. Phase 2 trials include controlled clinical studies conducted to evaluate the effectiveness of the drug for a particular indication in patients with the disease or condition and to determine the common or short-term side effects and risks associated with the drug. Phase 3 trials gather additional information about

effectiveness and safety that is necessary to evaluate the overall benefit-risk relationship of the drug and to provide an adequate basis for physician labeling. Studies submitted for the smaller grants ($100,000) may be phase 1, 2, or 3 trials.

Applications should propose a clinical trial of one therapy for one indication. The applicant must provide supporting evidence that sufficient quantity of the product to be investigated is available to the applicant in the form needed for the clinical trial. The applicant must also provide supporting evidence that the patient population has been surveyed and that there is reasonable assurance that the necessary number of eligible patients is available for the study.

Funds may be requested in the budget for travel to FDA to meet with reviewing division staff about product development progress.

II. Human Subject Protection and Informed Consent

A. Research Involving Human Subjects

Applicants should carefully review the section on human subjects in the application kit. "Section B. Specific Instructions—Forms, Item 4, Human Subjects," on pages 11 through 13 of the application kit should be carefully reviewed for the certification of Institutional Review Board (IRB) approval requirements. Documentation of IRB approval for every participating center is required to be on file with the Grants Management Officer, FDA. The goal should be to include enough information on the protection of human subjects in a sufficiently clear fashion so reviewers will have adequate material to make a complete review.

B. Informed Consent

Consent and/or assent forms, and any additional information to be given to a subject, should accompany the grant application. Information that is given to the subject or the subject's representative must be in language that the subject or his or her representative can understand. No informed consent, whether oral or written, may include any language through which the subject or the subject's representative is made to waive any of the subject's legal rights, or by which the subject or representative releases or appears to release the investigator, the sponsor, or the institution or its agent from liability.

If a study involves both adults and children, separate consent forms must be provided for the adults and the parents or guardians of the children.

C. Elements of Informed Consent

The elements of informed consent are stated in the regulations at 45 CFR 46.116 and 21 CFR 50.25 as follows:

1. Basic elements of informed consent.

In seeking informed consent, the following information shall be provided to each subject.

(a) A statement that the study involves research, an explanation of the purposes of the research and the expected duration of the subject's participation, a description of the procedures to be followed, and identification of any procedures which are experimental.

(b) A description of any reasonably foreseeable risks or discomforts to the subject.

(c) A description of any benefits to the subject or to others which may reasonably be expected from the research.

(d) A disclosure of appropriate alternative procedures or courses of treatment, if any, that might be advantageous to the subject.

(e) A statement that describes the extent, if any, to which confidentiality of records identifying the subject will be maintained, and that notes the possibility that FDA may inspect the records.

(f) For research involving more than minimal risk, an explanation as to whether any compensation and any medical treatments are available if injury occurs and, if so, what they consist of or where further information may be obtained.

(g) An explanation of whom to contact for answers to pertinent questions about the research and research subject's rights, and whom to contact in the event of research-related injury to the subject.

(h) A statement that participation is voluntary, that refusal to participate will involve no penalty or loss of benefits to which the subject is otherwise entitled, and that the subject may discontinue participation at any time without penalty or loss of benefits to which the subject is otherwise entitled.

2. Additional elements of informed consent.

When appropriate, one or more of the following elements of information shall also be provided to each subject.

(a) A statement that the particular treatment or procedure may involve risks to the subject (or the embryo or fetus, if the subject is or may become pregnant) which are currently unforeseeable.

(b) Anticipated circumstances under which the subject's participation may be terminated by the investigator without regard to the subject's consent.

(c) Any costs to the subject that may result from participation in the research.

(d) The consequences of a subject's decision to withdraw from the research and procedures for orderly termination of participation by the subject.

(e) A statement that significant new findings developed during the course of the research which may relate to the subject's willingness to continue participation will be provided to the subject.

(f) The approximate number of subjects involved in the study.

The informed consent requirements are not intended to preempt any applicable Federal, State, or local laws which require additional information to be disclosed for informed consent to be legally effective.

Nothing in the notice is intended to limit the authority of a physician to provide emergency medical care to the extent that a physician is permitted to do so under applicable Federal, State, or local law.

III. Reporting Requirements

An annual Financial Status Report (SF–269) is required. The original and two copies of this report must be submitted to FDA's Grants Management Officer within 90 days of the budget expiration date of the grant. Failure to file the Financial Status Report (SF–269) in a timely fashion will be grounds for suspension or termination of the grant.

For continuing grants, an annual program progress report is also required. The noncompeting continuation application (PHS 2590) will be considered the annual program progress report.

A final program progress report, Financial Status Report (SF–269), and Invention Statement must be submitted within 90 days after the expiration of the project period as noted on the Notice of Grant Award.

Program monitoring of grantees will be conducted on an ongoing basis and written reports will be done by the project officer. The monitoring may be in the form of telephone conversations between the project officer/grants management specialist and the principal investigator and/or a site visit with appropriate officials of the grantee organization. The results of these reports will be recorded in the official grant file and may be available to the grantee upon request consistent with FDA disclosure regulations..

IV. Mechanism of Support

A. Award Instrument

Support will be in the form of a grant. All awards will be subject to all policies

and requirements that govern the research grant programs of PHS, including the provisions of 42 CFR part 52 and 45 CFR parts 74 and 92. The regulations promulgated under Executive Order 12372 do not apply to this program.

All grant awards are subject to applicable requirements for clinical investigations imposed by sections 505, 507, 512, and 515 of the act (21 U.S.C. 355, 357, 360b, and 360e), section 351 of the PHS act (42 U.S.C. 262), and regulations promulgated under any of these sections.

B. Eligibility

These grants are available to any public or private nonprofit entity (including State and local units of government) and any for-profit entity. For-profit entities must commit to excluding fees or profit in their request for support.

C. Length of Support

The length of the study will depend upon the nature of the study. For those studies with an expected duration of more than 1 year, a second or third year of noncompetitive continuation of support will depend on: (1) Performance during the preceding year; and (2) the availability of Federal funds.

D. Funding Plan

The number of studies funded will depend on the quality of the applications received and the availability of Federal funds to support the projects. Before an award will be made, the status of the IND or the IDE will be verified. If the IND/IDE for the proposed study is not active or the proposed study has not been submitted to an ongoing IND/IDE, no award will be made. Further, documentation of IRB approvals for all performance sites must be on file with the Grants Management Officer, FDA (address above), before an award can be made.

V. Review Procedure and Criteria

A. Review Method

All applications submitted in response to this request for applications will first be reviewed by grants management and program staff for responsiveness to this request for applications. If applications are found to be nonresponsive, they will be returned to the applicant.

Responsive applications will be reviewed and evaluated for scientific and technical merit by a panel of experts in the subject field of the specific application. Responsive applications will also be subject to a second level of review by a National Advisory Council for concurrence with the recommendations made by the first-level reviewers, and funding decisions will be made by the Commissioner of Food and Drugs.

B. Program Review Criteria

Applications will be evaluated by program and grants management staff for responsiveness. Responsiveness will be based on the following criteria:

1. The application proposes a clinical trial to determine safety and/or efficacy of an orphan product. This should include an explanation in the "Description" section of how the proposed study will either facilitate product approval or provide essential data needed for product development.

2. The prevalence, not incidence, of population to be served by the product is fewer than 200,000 individuals in the United States. The applicant should include a detailed explanation supplemented by authoritative references in support of the prevalence figure. (If the product has been designated by FDA as an orphan product, a statement so stating will suffice.) Diagnostic tests and vaccines will qualify only if the population of intended use is fewer than 200,000 individuals in the United States. If applicants have questions, they may call program staff, listed above.

3. The number assigned to the current, active IND/IDE for the proposed study must appear on the face page of the application with the title of the project. Only medical foods that do not require premarket approval are exempt from this requirement. Studies of already approved products evaluating new orphan indications are also required to have a current, active IND/IDE. If the sponsor of the IND/IDE is other than the principal investigator listed on the application, a letter from the sponsor verifying access to the IND/IDE is required.

4. The requested budget must be within the limits (either $100,000 in direct costs for up to 3 years or $200,000 in direct costs for up to 2 years) as stated in this request for applications.

Applications considered nonresponsive will be returned to the applicant.

C. Scientific/Technical Review Criteria

For the first level of review, the scientific and technical merit criteria are:

1. The soundness of the rationale for the proposed study;

2. The quality and appropriateness of the study design to include the rationale for the statistical procedures;

3. The statistical justification for the number of patients chosen for the trial, based on the proposed outcome measures and the appropriateness of the statistical procedures to be used in analysis of the results;

4. The adequacy of the evidence that the proposed number of eligible subjects can be recruited;

5. The qualifications of the investigator and support staff, and the resources available to them;

6. The evidence that a sufficient quantity of the product is available to the applicant in the form needed for the investigation. A current letter from the supplier as an appendix will be acceptable.;

7. The adequacy of the justification for the request for financial support;

8. The adequacy of plans for complying with regulations for protection of human subjects; and

9. The ability of the applicant to complete the proposed study within its budget and within time limitations stated in this request for applications.

The priority score will be based on the above Scientific/Technical review criteria. In addition, the reviewers may advise the program staff concerning the appropriateness of the proposal to the goals (I. Research Goals and Priorities, described above) of the OPD Grants Program.

D. Award Criteria

Resources for this program are limited. Therefore, should two or more applications be received and approved by FDA which propose duplicative or very similar studies, FDA will support only the study with the best score.

VI. Submission Requirements

The original and five copies of the completed Grant Application Form PHS 398 (Rev. 9/91) or the original and two copies of the PHS 5161 (Rev. 7/92) for State and Local Governments, with copies of the appendices for each of the copies, should be delivered to Robert L. Robins (address above). Application receipt dates are October 1, 1994, and January 15, 1995. If the receipt date falls on a weekend, it will be extended to Monday; if the date falls on a holiday, it will be extended to the following work day. No supplemental material will be accepted after the receipt date. Evidence of final IRB approval will be accepted for the file after the receipt date, but it will not be sent out to the first level reviewers.

The outside of the mailing package and item 2 of the application face page should be labeled, "Response to RFA-FDA-OP-95-1."

If an application for the same study was submitted in response to the previous RFA, a submission in response to this RFA will be considered a request to withdraw the previous application.

VII. Method of Application

A. Submission Instructions

Applications will be accepted during normal working hours, 8 a.m. to 4:30 p.m., Monday through Friday, on or before the established receipt dates.

Applications will be considered received on time if sent on or before the receipt dates as evidenced by a legible U.S. Postal Service dated postmark or a legible date receipt from a commercial carrier, unless they arrive too late for orderly processing. Private metered postmarks shall not be acceptable as proof of timely mailing. Applications not received on time will not be considered for review and will be returned to the applicant.

Note: Applicants should note that the U.S. Postal Service does not uniformly provide dated postmarks. Before relying on the method, applicants should check with their local post office.

B. Format for Application

Submission of the application must be on Grant Application Form PHS 398 (Rev. 9/91). All "General Instructions" and "Specific Instructions" in the application kit should be followed with the exception of the receipt dates and the mailing label address. Do not send applications to the Division of Research Grants, NIH. Applications from State and Local Governments should be submitted on Form PHS 5161 (Rev. 7/92).

The face page of the application must reflect the request for applications number RFA–FDA–OP–95–1. The title of the proposed study must include the name of the product and the disease/disorder to be studied along with the IND/IDE number.

Data included in the application, if restricted with the legend specified below, may be entitled to confidential treatment as trade secret or confidential commercial information within the meaning of the Freedom of Information Act (5 U.S.C. 552(b)(4)) and FDA's implementing regulations (21 CFR 20.61).

Information collection requirements requested on Form PHS 398 and the instructions have been submitted by the PHS to the Office of Management and Budget (OMB) and were approved and assigned OMB control number 0925–0001.

C. Legend

Unless disclosure is required by the Freedom of Information Act as amended (5 U.S.C. 552) as determined by the freedom of information officials of the Department of Health and Human Services or by a court, data contained in the portions of this application which have been specifically identified by page number, paragraph, etc., by the applicant as containing restricted information shall not be used or disclosed except for evaluation purposes.

Dated: August 10, 1994.

Ronald G. Chesemore,

Associate Commissioner for Regulatory Affairs.

[FR Doc. 94–19915 Filed 8–12–94; 8:45 am]

BILLING CODE 4160–01–F

[Docket No. 94M–0248]

PB Diagnostic Systems, Inc.; Premarket Approval of OPUS® CEA

AGENCY: Food and Drug Administration, HHS.

ACTION: Notice.

SUMMARY: The Food and Drug Administration (FDA) is announcing its approval of the application by PB Diagnostic Systems, Inc., Westwood, MA, for premarket approval, under section 515 of the Federal Food, Drug, and Cosmetic Act (the act), of OPUS® CEA. FDA's Center for Devices and Radiological Health (CDRH) notified the applicant, by letter on June 20, 1994, of the approval of the application.

DATES: Petitions for administrative review by September 14, 1994.

ADDRESSES: Written requests for copies of the summary of safety and effectiveness data and petitions for administrative review to the Dockets Management Branch (HFA–305), Food and Drug Administration, rm. 1–23, 12420 Parklawn Dr., Rockville, MD 20857.

FOR FURTHER INFORMATION CONTACT: Peter E. Maxim, Center for Devices and Radiological Health (HFZ–440), Food and Drug Administration, 1390 Piccard Dr., Rockville, MD 20850, 301–594–1293.

SUPPLEMENTARY INFORMATION: On May 1, 1992, PB Diagnostic Systems, Inc., Westwood, MA 02090, submitted to CDRH an application for premarket approval of OPUS® CEA. The device is an enzyme immunoassay and is indicated for the quantitative measurement of carcinoembryonic antigen (CEA) in serum to be used as an aid in the prognosis and management of cancer patients in whom changing concentrations of CEA are observed. In accordance with the provisions of section 515(c)(2) of the act as amended by the Safe Medical Devices Act of 1990, this premarket approval (PMA) was not referred to the Immunology Devices Panel, an FDA advisory panel, for review and recommendation because the information in the PMA substantially duplicates information previously reviewed by this panel.

On June 20, 1994, CDRH approved the application by a letter to the applicant from the Director of the Office of Device Evaluation, CDRH.

A summary of the safety and effectiveness data on which CDRH based its approval is on file in the Dockets Management Branch (address above) and is available from that office upon written request. Requests should be identified with the name of the device and the docket number found in brackets in the heading of this document.

Opportunity for Administrative Review

Section 515(d)(3) of the act (21 U.S.C. 360e(d)(3)) authorizes any interested person to petition, under section 515(g) of the act (21 U.S.C. 360e(g)), for administrative review of CDRH's decision to approve this application. A petitioner may request either a formal hearing under part 12 (21 CFR part 12) of FDA's administrative practices and procedures regulations or a review of the application and CDRH's action by an independent advisory committee of experts. A petition is to be in the form of a petition for reconsideration under § 10.33(b) (21 CFR 10.33(b)). A petitioner shall identify the form of review requested (hearing or independent advisory committee) and shall submit with the petition supporting data and information showing that there is a genuine and substantial issue of material fact for resolution through administrative review. After reviewing the petition, FDA will decide whether to grant or deny the petition and will publish a notice of its decision in the **Federal Register**. If FDA grants the petition, the notice will state the issue to be reviewed, the form of review to be used, the persons who may participate in the review, the time and place where the review will occur, and other details.

Petitioners may, at any time on or before September 14, 1994, file with the Dockets Management Branch (address above) two copies of each petition and supporting data and information, identified with the name of the device and the docket number found in brackets in the heading of this

document. Received petitions may be seen in the office above between 9 a.m. and 4 p.m., Monday through Friday.

This notice is issued under the Federal Food, Drug, and Cosmetic Act (secs. 515(d), 520(h) (21 U.S.C. 360e(d), 360j(h))) and under authority delegated to the Commissioner of Food and Drugs (21 CFR 5.10) and redelegated to the Center for Devices and Radiological Health (21 CFR 5.53).

Dated: July 29, 1994.

Joseph A. Levitt,

Deputy Director for Regulations Policy, Center for Devices and Radiological Health.

[FR Doc. 94–19925 Filed 8–12–94; 8:45 am]

BILLING CODE 4160–01–F

[Docket No. 94M–0241]

Cardiac Pacemakers, Inc., Premarket Approval of VENTAK® PRx® Model 1700 and Model 1705 AICD™ System, Model 2850 PRESCRIPTOR™ Programmer and Model 2860 Program Disk

AGENCY: Food and Drug Administration, HHS.

ACTION: Notice.

SUMMARY: The Food and Drug Administration (FDA) is announcing its approval of the application by Cardiac Pacemakers, Inc., St. Paul, MN, for premarket approval, under section 515 of the Federal Food, Drug, and Cosmetic Act (the act), of the VENTAK® PRx® Model 1700 and Model 1705 AICD™ System, Model 2850 PRESCRIPTOR™ Programmer and Model 2860 Program Disk. After reviewing the recommendation of the Circulatory System Devices Panel, FDA's Center for Devices and Radiological Health (CDRH) notified the applicant, by letter of June 17, 1994, of the approval of the application.

DATES: Petitions for administrative review by September 14, 1994.

ADDRESSES: Written requests for copies of the summary of safety and effectiveness data and petitions for administrative review to the Dockets Management Branch (HFA–305), Food and Drug Administration, rm. 1–23, 12420 Parklawn Dr., Rockville, MD 20857.

FOR FURTHER INFORMATION CONTACT: Carole C. Carey, Center for Devices and Radiological Health (HFZ–450), Food and Drug Administration, 1390 Piccard Dr., Rockville, MD 20850, 301–594–2723.

SUPPLEMENTARY INFORMATION: On December 23, 1991, Cardiac Pacemakers, Inc., 4100 Hamline Ave., North, St. Paul, MN 55112, submitted to CDRH an application for premarket approval of VENTAK® PRx® Model 1700 and Model 1705 AICD™ System, Model 2850 PRESCRIPTOR™ Programmer and Model 2860 Program Disk. The VENTAK® PRx® Model 1700 and Model 1705 AICD™ System, Model 2850 PRESCRIPTOR™ Programmer and Model 2860 Program Disk consists of the following: Model 1700 or Model 1705 VENTAK® PRx® pulse generator; Model 6942 Torque Wrench; Models 0065 and 0066 defribrillation patch leads or commercially available defribrillation leads; Model 6829 Lead Cap; Model 6831 Lead Adapter; Model 6620 Torque Wrench; Model 0011 pace/sense lead or commercially available pace/sense leads; Model 2850 PRESCRIPTOR™ Programmer; Model 2860 Program Disk (Revision 10); Model 6575 or Model 6577 Telemetry Wand; and related programmer accessories including Model 6580 Electrogram Cable, Model 6884 BNC–BNC Cable, Model 6892 Internal Controller-Stimulator Cable, Model 6896 Ink Cartridges, Model 6897 Printer Paper, and Model 6899 Patient Data Disks. The device is an automatic implantable cardioverter defribrillator system and is indicated for the treatment of patients with ventricular fibrillation and/or ventricular tachyarrhythmias who are at high risk of sudden cardiac death. Such patients are defined as having experienced the following situations: The survival of at least one episode of cardiac arrest presumably due to hemodynamically unstable ventricular tachyarrhythmia not associated with acute myocardial infarction and/or poorly tolerated, sustained ventricular tachycardia (VT) and/or ventricular fibrillation (VF) which recurs spontaneously or can be induced despite the best antiarrhythmic drug therapy. (The clinical outcome of hemodynamically stable, sustained VT patients is not fully known. A study of the safety and effectiveness of the VENTAK® PRx® system on this selected subgroup of VT patients has not been conducted.)

On August 2, 1993, the Circulatory System Devices Panel of the Medical Devices Advisory Committee, an FDA advisory committee, reviewed and recommended approval of the application. On June 17, 1994, CDRH approved the application by a letter to the applicant from the Acting Director of the Office of Device Evaluation, CDRH.

A summary of the safety and effectiveness data on which CDRH based its approval is on file in the Dockets Management Branch (address above) and is available from that office upon written request. Requests should be identified with the name of the device and the docket number found in brackets in the heading of this document.

Opportunity for Administrative Review

Section 515(d)(3) of the act (21 U.S.C. 360e(d)(3)) authorizes any interested person to petition, under section 515(g) of the act (21 U.S.C. 360e(g)), for administrative review of CDRH's decision to approve this application. A petitioner may request either a formal hearing under part 12 (21 CFR part 12) of FDA's administrative practices and procedures regulations or a review of the application and CDRH's action by an independent advisory committee of experts. A petition is to be in the form of a petition for reconsideration under § 10.33(b) (21 CFR 10.33(b)). A petitioner shall identify the form of review requested (hearing or independent advisory committee) and shall submit with the petition supporting data and information showing that there is a genuine and substantial issue of material fact for resolution through administrative review. After reviewing the petition, FDA will decide whether to grant or deny the petition and will publish a notice of its decision in the **Federal Register**. If FDA grants the petition, the notice will state the issue to be reviewed, the form of review to be used, the persons who may participate in the review, the time and place where the review will occur, and other details.

Petitioners may, at any time on or before September 14, 1994, file with the Dockets Management Branch (address above) two copies of each petition and supporting data and information, identified with the name of the device and the docket number found in brackets in the heading of this document. Received petitions may be seen in the office above between 9 a.m. and 4 p.m., Monday through Friday.

This notice is issued under the Federal Food, Drug, and Cosmetic Act (secs. 515(d), 520(h) (21 U.S.C. 360e(d), 360j(h))) and under authority delegated to the Commissioner of Food and Drugs (21 CFR 5.10) and redelegated to the Center for Devices and Radiological Health (21 CFR 5.53).

Dated: July 29, 1994.

Joseph A. Levitt,

Deputy Director for Regulations Policy, Center for Devices and Radiological Health.

[FR Doc. 94–19924 Filed 8–12–94; 8:45 am]

BILLING CODE 4160–01–F

National Institutes of Health

John E. Fogarty International Center for Advanced Study in the Health Sciences; Meeting of the Fogarty International Center Advisory Board

Pursuant to Pub. L. 92–463, notice is hereby given of the twenty-eighth meeting of the Fogarty International Center (FIC) Advisory Board, September 27, 1994, in the Lawton Chiles International House (Building 16), at the National Institutes of Health.

The meeting will be open to the public from 8:30 a.m. to noon. The agenda will include a report on the NIH Extramural Research Program; a presentation on the Administration's emphases in science and technology; a report on the policy and program developments in the International Cooperative Biodiversity Groups Program; and a report on the June meeting of the Advisory Committee to the Director, NIH.

In accordance with the provisions of Secs. 552b(c)(4) and 552b(c)(6), Title 5, U.S.C. and sec. 10(d) of Pub. L. 92–463, the meeting will be closed to the public from 1:15 p.m. to adjournment for the review of applications to the Senior International Fellowship and Fogarty International Research Collaboration Awards Programs.

Myra Halem, Committee Management Assistant, Fogarty International Center, Building 31, Room B2C08, National Institutes of Health, Bethesda, Maryland 20892 (301–496–1491), will provide a summary of the meeting and a roster of the Committee members upon request. Irene Edwards, Executive Secretary, Fogarty International Center Advisory Board, Building 31, Room B2C08, telephone 301–496–1491, will provide substantive program information.

Individuals who plan to attend and need special assistance, such as sign language interpretation or other reasonable accommodations, should contact Ms. Halem at least 2 weeks in advance of the meeting.

(Catalog of Federal Domestic Assistance Program No. 93.989, Senior International Awards Program, and 93.934, Fogarty International Research Collaboration Award.)

Dated: August 3, 1994.

Susan K. Feldman,

Committee Management Officer, NIH.

[FR Doc. 94–19827 Filed 8–12–94; 8:45 am]

BILLING CODE 4140–01–M

National Institute on Alcohol Abuse and Alcoholism; Meeting of the National Advisory Council on Alcohol Abuse and Alcoholism

Pursuant to Pub. L. 92–463, notice is hereby given of the meeting of the National Advisory Council on Alcohol Abuse and Alcoholism, National Institute on Alcohol Abuse and Alcoholism, September 22, 1994, Residence Inn, 7335 Wisconsin Avenue, Bethesda, MD 20814.

This meeting will be open to the public on September 22 from 1 p.m. to adjournment to discuss administrative details or other issues relating to council activities. Attendance by the public will be limited to space available. Individuals who plan to attend and need special assistance, such as sign language interpretation or other reasonable accommodations, should contact Diana Widner, Office of Scientific Affairs, NIAAA, at 301/443–4376.

In accordance with the provisions set forth in secs. 552b(c)(4) and 552b(c)(6), Title 5, U.S.C. and sec. 10(d) of Pub. L. 92–463, the meeting will be closed to the public on September 22 from 8:30 a.m. to 11:30 a.m. for the review, discussion and evaluation of individual grant applications. The applications and the discussions could reveal confidential trade secrets or commercial property such as patentable material, and personal information concerning individuals associated with the application, the disclosure of which would constitute a clearly unwarranted invasion of personal privacy.

Ms. Diana Widner, Committee Management Officer, National Institute on Alcohol Abuse and Alcoholism, Willco Building, Suite 409, 6000 Executive Blvd., Rockville, MD 20892–7003, Telephone: 301/443–4376 will provide a summary of the meeting, roster of council members, and substantive program information upon request.

(Catalog of Federal Domestic Assistance Program No. 93.271 (Alcohol Research Career Development Awards for Scientists and Clinicians), 93.272 (Alcohol National Research Service Awards for Research Training), 93.273 (Alcohol Research Programs), 93.281 (Scientist Development Award, Research Scientist Development Award, Scientist Development Award for Clinicians, and Research Scientist Award), 93.891 (Alcohol Research Center Grants), National Institutes of Health).

Dated: August 9, 1994.

Susan K. Feldman,

Committee Management Officer, NIH.

[FR Doc. 94–19831 Filed 8–12–94; 8:45 am]

BILLING CODE 4140–01–M

National Institute of Allergy and Infectious Diseases; Meeting: AIDS Research Advisory Committee, NIAID

Pursuant to Pub. L. 92–463, notice is hereby given of the meeting of the AIDS Research Advisory Committee, National Institute of Allergy and Infectious Diseases, on September 23, 1994, in the Congressional Ballroom of the Marriott Hotel, 5151 Pooks Hill Road, Bethesda, Maryland.

The entire meeting will be open to the public from 8 a.m. until adjournment. The AIDS Research Advisory Committee (ARAC) advises and makes recommendations to the Director, National Institute of Allergy and Infectious Diseases, on all aspects of research on HIV and AIDS related to the mission of the Division of AIDS (DAIDS).

The Committee will provide advice on scientific priorities, policy, and program balance at the Division level. The Committee will review the progress and productivity of ongoing efforts, identify critical gaps/obstacles to progress, and provide concept clearance for proposed research initiatives. Attendance by the public will be limited to space available.

Ms. Anne P. Claysmith, Executive Secretary, AIDS Research Advisory Committee, DAIDS, NIAID, NIH, Solar Building, Room 2A22, telephone 301–496–0545, will provide a summary of the meeting and a roster of committee members upon request. Individuals who plan to attend and need special assistance, such as sign language interpretation or other reasonable accommodations, should contact Ms. Claysmith in advance of the meeting.

(Catalog of Federal Domestic Assistance Program Nos. 93.855, Immunology, Allergic and Immunologic Diseases Research; 93.856, Microbiology and Infectious Diseases Research, National Institutes of Health).

Dated: August 9, 1994.

Susan K. Feldman,

Committee Management Officer, NIH.

[FR Doc. 94–19832 Filed 8–12–94; 8:45 am]

BILLING CODE 4140–01–M

National Institute on Deafness and Other Communication Disorders; Meeting of the National Deafness and Other Communication Disorders Advisory Board

Pursuant to Pub. L. 92–463, notice is hereby given of the meeting of the National Deafness and Other Communication Disorders Advisory Board on September 9, 1994. The meeting will take place from 8:30 a.m. to 4:30 p.m. in Conference Room 6,

Building 31C, National Institutes of Health, 9000 Rockville Pike, Bethesda, Maryland 20892.

The meeting will be open to the public from 8:30 a.m. to 4 p.m. to discuss the Board's activities and to present special reports. Attendance by the public will be limited to the space available.

In accordance with the provisions set forth in sec. 552b(c)(6), Title 5, U.S.C. and sec. 10(d) of Pub. L. 92–463, the meeting will be closed to the public from 4 p.m. until adjournment. The closed portion of the meeting will be for the discussion and approval of individuals to serve on the scientific panel to update the voice and voice disorders section of the Research Plan. This discussion could reveal personal information concerning these individuals, disclosure of which would constitute a clearly unwarranted invasion of personal privacy.

Summaries of the Board's meeting and a roster of members may be obtained from Ms. Monica Davies, Executive Director, National Deafness and Other Communication Disorders Advisory Board, Building 31, Room 3C08, National Institutes of Health, Bethesda, Maryland 20892, 301–402–1129, upon request.

Individuals who plan to attend and need special assistance, such as sign language interpretation or other reasonable accommodations, should contact the Executive Director in advance of the meeting.

(Catalog of Federal Domestic Assistance Program No. 93.173, Biological Research Related to Deafness and Communication Disorders.)

Dated: August 3, 1994.

Susan K. Feldman,

Committee Management Officer, NIH.

[FR Doc. 94–19828 Filed 8–12–94; 8:45 am]

BILLING CODE 4140–01–M

National Institute of Mental Health; Meetings

Pursuant to Pub. L. 92–463, notice is hereby given of the meetings of the advisory committees of the National Institute of Mental Health for September 1994.

The meeting of the National Advisory Mental Health Council will be open to the public, as indicated, for discussion of NIMH policy issues and will include current administrative, legislative, and program developments. Attendance by the public will be limited to space available. Individuals who plan to attend and need special assistance, such as sign language interpretation or other reasonable accommodations, should contact the contact person named below in advance of the meeting.

In accordance with the provisions set forth in secs. 552b(c)(4) and 552b(c)(6), Title 5, U.S.C. and sec. 10(d) of Pub. L. 92–463, the entire meeting of the review committee and a portion of the Council will be closed to the public as indicated below for the review, discussion and evaluation of individual grant applications. These applications, evaluations, and the discussions could reveal confidential trade secrets or commercial property such as patentable material, and personal information concerning individuals, the disclosure of which would constitute a clearly unwarranted invasion of personal privacy.

Ms. Joanna L. Kieffer, Committee Management Officer, National Institute of Mental Health, Parklawn Building, Room 9–105, 5600 Fishers Lane, Rockville, MD 20857, Area Code 301, 443–4333, will provide a summary of the meeting and a roster of committee members.

Other information pertaining to the meetings may be obtained from the contact person indicated.

Committee Name: National Advisory Mental Health Council.

Contact: Carolyn Strete, Ph.D., Parklawn Building, Room 9–105, Telephone: 301, 443–3367.

Meeting Date: September 12–13, 1994.

Place:

September 12—Conference Rooms D and E, Parklawn Building, 5600 Fishers Lane, Rockville, MD 20857.

September 13—Wilson Hall, Building 1, National Institutes of Health, 9000 Rockville Pike, Bethesda, MD 20892.

Open: September 12, 2 p.m. to 5 p.m., September 13, 9 a.m. to adjournment.

Closed: September 12, 9:30 a.m. to 2 p.m.

Committee Name: Neuropharmacology and Neurochemistry Review Committee.

Contact: Wm. Gregory Zimmerman, Parklawn Building, Room 9–101, Telephone: 301, 443–3857.

Meeting Date: September 28–30, 1994.

Place: Chevy Chase Holiday Inn, 5520 Wisconsin Avenue, Chevy Chase, MD 20815.

(Catalog of Federal Domestic Assistance Program Numbers 93.126, Small Business Innovation Research; 93.176, ADAMHA Small Instrumentation Program Grants; 93.242, Mental Health Research Grants; 93.281, Mental Research Scientist Development Award and Research Scientist Development Award for Clinicians; 93.282, Mental Health Research Service Awards for Research Training; and 93.921, ADAMHA Science Education Partnership Award.)

Dated: August 9, 1994.

Susan K. Feldman,

Committee Management Officer, NIH.

[FR Doc. 94–19830 Filed 8–12–94; 8:45 am]

BILLING CODE 4140–01–M

Division of Research Grants; Closed Meetings

Pursuant to Section 10(d) of the Federal Advisory Committee Act, as amended (5 U.S.C. Appendix 2), notice is hereby given of the following Division of Research Grants Special Emphasis Panel (SEP) meetings:

Purpose/Agenda: To review individual grant applications.

Name of SEP: Behavioral and Neurosciences.

Date: August 24, 1994.

Time: 12:00 noon.

Place: NIH, Westwood Bldg., Rm 309, Telephone Conference.

Contact Person: Dr. Joseph Kimm, Scientific Review Administrator, 5333 Westbard Ave., Room 309, Bethesda, MD 20892, (301) 594–7257.

Name of SEP: Behavioral and Neurosciences.

Date: August 31, 1994.

Time: 1:00 p.m.

Place: NIH, Westwood Bldg., Rm 306A, Telephone Conference.

Contact Person: Dr. Lillian Pubols, Scientific Review Admin., 5333 Westbard Ave., Room 306A, Bethesda, MD 20892, (301) 594–7325.

The meetings will be closed in accordance with the provisions set forth in sec. 552b(c)(4) and 552b(c)(6), Title 5, U.S.C. Applications and/or proposals and the discussions could reveal confidential trade secrets or commercial property such as patentable material and personal information concerning individuals associated with the applications and/or proposals, the disclosure of which would constitute a clearly unwarranted invasion of personal privacy.

(Catalog of Federal Domestic Assistance Program Nos. 93.306, 93.333, 93.337, 93.393–93.396, 93.837–93.844, 93.846–93.878, 93.892, 93.893, National Institutes of Health, HHS)

Dated: August 5, 1994.

Susan K. Feldman,

Committee Management Officer, NIH.

[FR Doc. 94–19829 Filed 8–12–94; 8:45 am]

BILLING CODE 4140–01–M

Office of Inspector General

Program Exclusions: July 1994

AGENCY: Office of Inspector General, HHS.

ACTION: Notice of program exclusions.

During the month of July 1994, the HHS Office of Inspector General imposed exclusions in the cases set forth below. When an exclusion is imposed, no program payment is made to anyone for any items or services (other than an emergency item or service not provided in a hospital emergency room) furnished, ordered or prescribed by an excluded party under

the Medicare, Medicaid, Maternal and Child Health Services Block Grant and Block Grants to States for Social Services programs. In addition, no program payment is made to any business or facility, e.g., a hospital, that submits bills for payment for items or services provided by an excluded party. Program beneficiaries remain free to decide for themselves whether they will continue to use the services of an excluded party even though no program payments will be made for items and services provided by that excluded party. The exclusions have national effect and also apply to all other Federal non-procurement programs.

Subject, city, state	Effective date
PROGRAM-RELATED CONVICTIONS	
ABI GEZUNT PHARMACY, INC., BROOKLYN, NY	08/10/94
ARCEGA, JOCELYN, POMONA, CA	08/10/94
BENNETT, DONALD J., WAYNE, MI	08/10/94
BOLLINGER, NORMAN, OSSEO, MN	08/10/94
BROWN, ENSLEY, MILWAUKEE, WI	08/10/94
BUFFALO HEARING AID CO, INC., WILLIAMSVILLE, NY	08/18/94
CHAM, KRISHNA, FARMINGTON HILLS, MI	08/10/94
CHEA, TAY, SAN FRANCISCO, CA	08/18/94
CLYDE D BROWN, M.D. & ASSOC., CINCINNATI, OH	08/18/94
COUNCIL, BENJAMIN P., LAUREL, MS	08/17/94
DAHER, ROBERT B., FRESNO, CA	08/10/94
DELAPLANTE, LINDA A., WILLIAMSVILLE, NY	08/18/94
DIANA, DANIEL J., FOREST HILLS, NY	08/18/94
FERNS, MELVILLE, NEW YORK, NY	08/18/94
FILARDI, SUSAN, YONKERS, NY	08/10/94
FIORILLO, LOUIS, WEIDMAN, MI	08/10/94
FRESHOUR, BERYL K., GREENEVILLE, TN	08/10/94
GALE, THOMAS, TOMS RIVER, NJ	08/10/94
GHARAVI, NAJM, LAS VEGAS, NV	08/10/94
GIBSON, RONNIE, PINEVILLE, KY	08/10/94
GUILLORY, CARROLL JAMES, MARKSVILLE, LA	08/17/94
GUILLORY, LOIS D., MARKSVILLE, LA	08/17/94
HOGUE, ARQUITA LYNETTE, LAUREL BAY, SC	08/10/94
JAVIER CANO, INC., CLEVELAND, OH	08/18/94
KAMEL, MOHAMAD A., EL PASO, TX	08/17/94
KREUZER, DAN F., BYRON CENTER, MI	08/10/94
LANE, RANDY J., PHOENIX, AZ	08/10/94
MAJUNDER, MAJIBUR, BRONX, NY	08/10/94
MALIK, THOMAS P., BELL HAVEN, VA	08/10/94
NALI, FRANK, GROSSE POINTE, MI	08/10/94
NESSELROAD, MICHELLE, MCCONNELSVILLE, OH	08/18/94
PACHRE, INC., INKSTER, MI	08/10/94
PENDI, ISHFAQ, FULLERTON, CA	08/10/94
PEREZ-DELEON, EDGARDO, BIRMINGHAM, MI	08/10/94
RILEY, JOHN R., WACO, TX	08/17/94
RODGERS, KAREN K., SHARON, PA	08/17/94
SCHAFFER, HYMAN, NEW YORK, NY	08/18/94
SCHWARTZ, GARY, JACKSON, MI	08/10/94
SHRIVER, JODI, MALTA, OH	08/18/94
SOLID CARE MEDICAL SUPPLIES, WALNUT, CA	08/10/94
SPIERER, CHRIS M., LAS VEGAS, NV	08/10/94
SPIERER, FREDRIK, HENDERSON, CO	08/10/94
STOKOLS, MARSHAL, CLIFFSIDE PARK, NJ	08/10/94
STRAIGHT, ROXANNE, BLOOMINGTON, MN	08/10/94
STRAIGHT, ALLAN R., BLOOMINGTON, MN	08/10/94
UY, LUCITA L., WALNUT, CA	08/10/94
VELEZ-RUIZ, WANDA E., BIRMINGHAM, MI	08/10/94
WEBER, STEVEN ANDREW SR., LOUISVILLE, KY	08/10/94
YERIAN, MICHAEL A., SPRINGFIELD, OH	08/18/94
PATIENT ABUSE/NEGLECT CONVICTIONS	
ARMENTA, DONNA, FARMINGTON, NM	08/17/94
BYNUM, LISA H., BRUSLY, LA	08/17/94
CRESPIN, BERNARD, SANTO DOMINGO, NM	08/17/94
ELRICK, TAWNYA L., PROCTOR, VT	08/10/94
EVANS, RON C., GONZALES, LA	08/17/94
HARRIS, TERESA, HAZLEHURST, MS	08/17/94
HARRIS, FLORENE, FARMINGTON, NM	08/17/94
HUBBS, FLORA J., SNOHOMISH, WA	08/10/94
HUNTER, GEORGE LEE, HOMER, LA	08/17/94
JOHNSON, LINDA LOUISE, MOBILE, AL	08/10/94
LIPSCOMB, BERNADETTE, BALTIMORE, MD	08/10/94
NASH, NORMA J., ALEXANDRIA, LA	08/17/94

Subject, city, state	Effective date
RAYBURN, CAROLE A., LAKEWOOD, CO	08/10/94
RICE, VERONICA, MERIDIAN, MS	08/17/94
RINEHART, ETTA L., AKRON, CO	08/10/94
SUDARSANAM, NEELAMBAR, SUNNYVALE, CA	08/18/94
VELAZQUEZ, TARSICIO A., HAYWARD, CA	08/10/94
WILLIAMS, GLORIA, MOSS POINT, MS	08/17/94
CONVICTION FOR HEALTH CARE FRAUD	
GRANDELLI, VINCENT A., STATEN ISLAND, NY	08/18/94
PRICE, MARIANNE FAY, JUDSONIA, AR	08/17/94
TRAINA, ANTHONY, MANHASSET, NY	08/18/94
CONTROLLED SUBSTANCE CONVICTIONS	
LONERGAN, TAD E., GLENDALE, CA	08/18/94
SHARP, PATRICK A., TUSKAHOMA, OK	08/17/94
LICENSE REVOCATION/SUSPENSION	
MORSCH, JACQUELINE P., SPRINGFIELD, VA	08/10/94
BRADLEY, VINCENT D., ENCINITAS, CA	08/10/94
DOWBACK, JOHN M., BAYVILLE, NY	08/10/94
GRAVELINE, DUANE E., NEWPORT, VT	08/10/94
GREGORIO, ARTEMIO O., RIVERHEAD, NY	08/10/94
HERZSTEIN, MARTIN J., RANCHO PALOS VERDE, CA	08/10/94
HOLZBERGER, PHILIP, MILLBROOK, NY	08/10/94
JOHNSON, MARY ELLEN, WATERFORD, CT	08/10/94
LUIKART, WALTER, NEW YORK, NY	08/10/94
MIRON, MORTON A., TERRELL, TX	08/17/94
OWENS, EUGENE H., BALTIMORE, MD	08/10/94
VONRUEDEN, MICHELLE M., FARGO, ND	08/10/94
WASSERMAN, HARVEY, WESTPORT, CT	08/10/94
WISE, JAMES L., CHARLES CITY, VA	08/10/94
WORDEN, ELSMER L., ROCHESTER, NY	08/10/94
FEDERAL/STATE EXCLUSION/SUSPENSION	
CUSHING VALLEY HOPE ALCOHOLISM, CUSHING, OK	08/17/94
KETCHUM, THOMAS A., INDIAN WELLS, CA	08/10/94
ENTITIES OWNED/CONTROLLED BY SANCTIONED	
A G ENTERPRISES, INC., MARKSVILLE, LA	08/17/94
JUST RITE DRUGS, MIDDLEBORO, KY	08/10/94
N T PLASTIC & ALLERGY CENTER, LAUREL, MS	08/17/94
DEFAULT ON HEAL LOAN	
ANDERSON, RUSSELL N., LAKE ISABELLA, CA	08/18/94
ARKFIELD, TED A., PHOENIX, AZ	08/10/94
BROOKS, DELROY C., BROOKLYN, NY	08/18/94
CHACKER, LAURENCE G., PHILADELPHIA, PA	08/10/94
COLLIER, WILLIAM F., SANTA ROSA, CA	08/18/94
DANKOVICH, DANIEL S., CANFIELD, OH	08/18/94
DAVIS, JAMES D., CLARKSVILLE, TN	08/10/94
DELGADO, JORGE A., MIAMI, FL	08/10/94
DIQUATTRO, SCOTT J., CATHEDRAL CITY, CA	08/10/94
DVORAK, ROSALIE J., MORENO VALLEY, CA	08/18/94
ECKEL, DAVID E., LANCASTER, CA	08/18/94
GANTHER, TIMOTHY G., VIRGINIA BEACH, VA	08/10/94
GARNER, GREGG R., SAN DIEGO, CA	08/18/94
HALBERT, CYRIL F., BRONX, NY	08/18/94
HANNON, DENNIS, WARREN, PA	08/10/94
HARPER, JENNIFER M., ATLANTA, GA	08/10/94
HOLZER, RICHARD M., BOCA RATON, FL	08/10/94
IMANI, IBN A., MIAMI, FL	08/10/94
JACKSON, LESTER G III, SAVANNAH, GA	08/10/94
JOHNSON, SHEILA A., LOS ANGELES, CA	08/18/94
KRISTA, GERALDINE M., ORANGE CITY, FL	08/10/94
LARSON, LESLIE A., PASADENA, CA	08/10/94
LAWSON, GERALD M., CINCINNATI, OH	08/18/94
MCCORMACK, WAYNE C., LIBERTY, NY	08/18/94
MCCOY, GARY S., JACKSONVILLE, FL	08/10/94
PATTENDIEN-GAY, SHARON J., SAN FRANCISCO, CA	08/18/94
RICH, KENNETH C., TUCSON, AZ	08/10/94

Subject, city, state	Effective date
RICHARDSON, GRAVNEY A., UPPER MARLBORO, MD	08/10/94
RINDLISBACHER, MARK C., PAYSON, UT	08/10/94
RITTO, SHARLENE M., CORONA, CA	08/18/94
SMITH, CATHERINE J., PHOENIX, AZ	08/10/94
SMITH, ROBERT L., OJAI, CA	08/18/94
SNAVELY, DANIEL H., LAGUNA NIGUEL, CA	08/18/94
STOLTZ, WILLIAM D., GRANTS PASS, OR	08/10/94
STUDER, JONATHAN V. SAN JOSE, CA	08/18/94
SWEN, JOHN MARK, ORANGEVALE, CA	08/10/94
TRAUGER, GARY L., WATFORD CITY, ND	08/10/94
WELLS, JOHN A., SHELTER ISLAND, NY	08/18/94
YATES, TIMOTHY J., NAPA, CA	08/18/94
YUDICHAK, JOHN M., LARKSVILLE, PA	08/10/94

Dated: August 4, 1994.

James F. Patton,

Director, Health Care Administrative Sanctions, Office of Civil Fraud and Administrative Adjudication.

[FR Doc. 94–19837 Filed 08–12–94; 8:45 am]

BILLING CODE 4150–04–P

Substance Abuse and Mental Health Services Administration

Center for Substance Abuse Prevention; Meetings

Pursuant to Public Law 92–463, notice is hereby given of the meetings of the Center for Substance Abuse Prevention National Advisory Council and the Drug Testing Advisory Board of the Center for Substance Abuse Prevention (CSAP) for September 1994.

The CSAP National Advisory Council meeting will include discussion of announcements and reports of administrative, legislative and program developments. The Council will also be performing review of applications for Federal assistance; therefore, a portion of this meeting will be closed to the public as determined by the Acting Administrator, SAMHSA, in accordance with 5 U.S.C. 552b(c)(6) and 5 U.S.C. app. 2 10(d).

The Drug Testing Advisory Board will discuss program, procedural and technical issues. The Board will also be performing reviews of National Laboratory Certification Program inspections and operations; therefore a portion of this meeting will be closed to the public as determined by the Acting Administrator, SAMHSA, in accordance with 5 U.S.C. 552b(c) (2), (4), and (6) and 5 U.S.C. app. 2 10(d).

Summaries of these meetings and rosters of committee members may be obtained from: Ms. D. Herman, Committee Management Officer, CSAP, Rockwall II Building, suite 630, 5600 Fishers Lane, Rockville, MD 20857 (telephone: 301–443–7390).

Substantive program information may be obtained from the contacts whose names, room numbers, and telephone numbers are listed below:

Committee Name: Center for Substance Abuse Prevention, National Advisory Council.

Meeting Date(s): September 22–23, 1994.

Place: Holiday Inn Crowne Plaza, 1750 Rockville Pike, Rockville, Maryland 20852.

Closed: September 22, 8:30 a.m.–5:00 p.m.

Open: September 23, 8:30 a.m.–5:00 p.m.

Contact: Yuth Nimit, Ph.D.; Rockwall II Building, suite 630; telephone: (301) 443–4783.

Committee Name: Drug Testing Advisory Board.

Meeting Date(s): September 22, 1994.

Place: Bethesda Marriott Hotel, 5151 Pooks Hill Road, Bethesda, Maryland 20814.

Open: September 22, 8:30 a.m.–10:15 a.m.

Closed: Otherwise.

Contact: Donna M. Bush, Ph.D., room 13A–54 Parklawn Building; telephone: (301) 443–6014.

Dated: August 9, 1994.

Peggy W. Cockrill,

Committee Management Officer, Substance Abuse and Mental Health Services Administration.

[FR Doc. 94–19857 Filed 8–12–94; 8:45 am]

BILLING CODE 4162–20–P

DEPARTMENT OF HOUSING AND URBAN DEVELOPMENT

Office of the Secretary—Office of Lead-Based Paint Abatement and Poisoning Prevention

[Docket No. N–94–3769; FR–3725–N–02]

Task Force on Lead-Based Paint Hazard Reduction and Financing; Open Meeting

AGENCY: Office of Lead-Based Paint Abatement and Poisoning Prevention, HUD.

ACTION: Notice of open meetings.

SUMMARY: The Task Force was established by the Secretary pursuant to section 1015 of the Residential Lead-Based Paint Hazard Reduction Act of 1992. The charter of the Task Force was approved July 14, 1993.

The Task Force includes individuals representing the Department of Housing and Urban Development; the Farmers Home Administration; the Department of Veterans Affairs; the Federal Home Loan Mortgage Corporation; the Federal National Mortgage Association; the Environmental Protection Agency; employee organizations in the building and construction trades industry; landlords; tenants; primary lending institutions; private mortgage insurers; single-family and multifamily real estate interests; nonprofit housing developers; property liability insurers; public housing agencies; low-income housing advocacy organizations; national, State, and local lead-poisoning prevention advocates and experts; and community-based organizations located in areas with substantial rental housing. These members were selected on the basis of personal experience and expert knowledge. Three committees were established by the Task Force members; (1) Finance Committee; (2) Liability Committee; and (3) Implementation Committee. The members of these committees are members of the Task Force.

DATES: Two of the committees will be meeting on September 8, 1994—Implementation Committee (9 to 5), and September 9, 1994—Liability Committee (9 to 5), (EST), at the Madison Hotel Fifteenth & M Streets NW., Washington, DC 20005, telephone number (800) 424–8577, or (202) 862–1740.

ADDRESSES: Members of the public are invited to provide written material to: Ruth Wright, Task Force Staff Director, Department of Housing and Urban Development, 451 7th Street SW., room B–133, Washington, DC 20410.

FOR FURTHER INFORMATION CONTACT: Ruth Wright, Task Force Staff Director, Department of Housing and Urban

Development, 451 7th Street SW., room B–133, Washington, DC 20410; telephone (202) 755–1805. The TTD numbers are (202) 708–9300 or 1–800–877–8339. (Except for the "800" number, these are not toll-free numbers.)

SUPPLEMENTARY INFORMATION: The last Task Force Committee meetings were held on June 20, 21, & 22 in Annapolis, Md. An announcement will be published in the **Federal Register** at least 15 days before each meeting. All meetings will be open to the public, with limited seating available on a first-come, first-served basis.

The mandate of the Task Force is to make recommendations to the Secretary of HUD and the Administrator of the Environmental Protection Agency (EPA) concerning:

(1) Incorporating the need to finance lead-based paint hazard reduction into underwriting standards;

(2) Developing new loan products and procedures for financing lead-based paint hazard evaluation and reduction activities;

(3) Adjusting appraisal guidelines to address lead safety;

(4) Incorporating risk assessments or inspections for lead-based paint as a routine procedure in the origination of new residential mortgages;

(5) Revising guidelines, regulations, and educational pamphlets issued by the Department of Housing and Urban Development and other Federal agencies relating to lead-based paint poisoning prevention;

(6) Reducing the current uncertainties of liability related to lead-based paint in rental housing, by clarifying standards of care for landlords and lenders and by exploring the "safe harbor" concept;

(7) Increasing the availability of liability insurance for owners of rental housing and certified contractors and establishing alternative systems to compensate victims of lead-based paint poisoning; and

(8) Evaluating the utility and appropriateness of requiring both risk assessments or inspections and notification to prospective lessees of rental housing.

Authority: 42 U.S.C. 4852a, 4852b.

Dated: August 9, 1994.

Ronald J. Morony,

Acting Director, Office of Lead-Based Paint Abatement and Poisoning Prevention.

[FR Doc. 94–19927 Filed 8–12–94; 8:45 am]

BILLING CODE 4210–32–P

DEPARTMENT OF THE INTERIOR

Bureau of Land Management

[OR–050–4210–05:GP4–255]

Oregon; Wild and Scenic River Management Plan

August 5, 1994.

This notice announces an adjustment in the interim wild and scenic river corridor boundary of the main stem of the John Day River.

Willamette Meridian

T. 1 N., R. 19 E.

Section 14 S½S½SW¼SW¼SE¼.

Containing 2.5 acres.

Completion of a recent survey has shown that a house constructed 20 years ago sits just over the property line on public land. Had this been known prior to proposing the interim wild and scenic river corridor boundary, the boundary would have been drawn to exclude the improvements.

Consequently, the interim boundary is being adjusted to include another 2.5 acres of unimproved river frontage and exclude the 2.5 acres containing the improvements. This will be reflected in a supplement to the draft John Day River Management Plan to be released later this year.

FOR FURTHER INFORMATION CONTACT: Harry R. Cosgriffe, Area Manager, Central Oregon Resource Area, Bureau of Land Management, Prineville District Office, 2321 E. 4th Street, Prineville, Oregon 97754; telephone (503) 447–8731.

For a period of 30 days from the date of publication of this notice in the **Federal Register**, interested parties may submit comments to the District Manager, Prineville District, 185 E. 4th Street, Prineville, Oregon 97754. In the absence of timely objections, this proposal shall become the final determination of the Department of the Interior.

Milton L. Rogers,

Acting District Manager, Prineville District.

[FR Doc. 94–19725 Filed 8–12–94; 8:45 am]

BILLING CODE 4310–33–M

[NV–030–4333–04; Closure Notice No. NV–030–94–08]

Temporary Closure of Certain Public Lands in the Carson City District for Management of the 1994 Running of the V.O.R.R.A. "Yerington to Fallon and Back" Off-Highway Vehicle (OHV) Race

AGENCY: Bureau of Land Management, Interior.

ACTION: Temporary closure of certain public lands in Churchill County and Lyon County, Nevada, on and adjacent to the 1994 "Yerington to Fallon and Back" race course on September 4, 1994. Access will be limited to race officials, entrants, law enforcement and emergency personnel, BLM personnel monitoring the event, licensed permittee(s) and right-of-way grantees.

SUMMARY: The Carson City District Manager announces the temporary closure of selected public lands under his administration. This action is being taken to provide for public safety during the official running of the 1994 "Yerington to Fallon and Back" OHV Race.

EFFECTIVE DATE: September 4, 1994.

FOR FURTHER INFORMATION CONTACT: Fran Hull or Terry Knight, Outdoor Recreation Planners, Carson City District Office, 1535 Hot Springs Road, Suite 300, Carson City, Nevada 89706–0638. Telephone (702) 885–6100.

SUPPLEMENTARY INFORMATION: Certain public lands in the Carson City District, Churchill County and Lyon County, Nevada, will be temporarily closed to public access on September 4, 1994, to protect persons, property, and public land resources on and adjacent to the 1994 "Yerington to Fallon and Back" OHV race, permit number NV–03414–4–11. Specific restrictions and closure information are as follows:

1. The public lands to be closed or restricted are those lands adjacent to and including roads, trails and washes identified as the 1994 "Yerington to Fallon and Back" OHV race course. These lands are within T.13N., R.25E.; T.13N., R.24E.; T.14N., R.24E.; T.15N., R.24E.; T.16N., R.24E.; T.16N., R.25E.; T.16N., R.26E.; T.16N., R.27E.; T.16N., R.28E.; T.16N., R29E.; T.16N., R.30E.; T.17N., 26E.; T.17N., R.30E.; and T.18N., R.30E. M.D.M. A map of the race course may be obtained from Fran Hull or Terry Knight at the contact address. The event permittee is required to mark and monitor the race course during this closure period.

2. From 6:00 A.M. to 11:59 P.M., Sunday, September 4, 1994, the race course and those public lands 300 feet to either side of the course are closed to the public, except for designated check points and spectator areas.

3. Areas from which spectators may view the event are confined to the start/finish area in Section 21, T.13N., R.25E., the restart area in Section 32, T.18N., R.30E. M.D.M. and check points 1, 2, 3, 4, 5 and 6, identified on the map of the race course. All public spectator vehicles operating within these

designated areas shall maintain a maximum speed of 10 MPH. Spectators shall remain in safe locations as directed by event officials or BLM personnel.

The above restrictions do not apply to race officials, law enforcement and emergency personnel, or BLM personnel monitoring the event.

Authority for closure of public lands is found in 43 CFR 8341, 43 CFR 8364 and 43 CFR 8372. Any person who fails to comply with this closure order may be subject to the penalties provided in 43 CFR 8360.7.

Dated: August 4, 1994.

Karl L. Kipping,

Acting District Manager.

[FR Doc. 94–19841 Filed 8–12–94; 8:45 am]

BILLING CODE 4310–HC–M

[UT–060–03–4110–03]

Intent to Prepare an Environmental Impact Statement for the River Gas of Utah, Inc. Coalbed Methane Project in Carbon County, UT

AGENCY: Bureau of Land Management, Interior.

ACTION: Notice of Intent to Prepare an Environmental Impact Statement for the River Gas of Utah, Inc. Coalbed Methane Project in Carbon County, Utah and Notice of Scoping Meeting.

SUMMARY: Pursuant to section 102(2) (C) of the National Environmental Policy Act of 1969, the Bureau of Land Management (BLM), Moab District, will be directing the preparation of an EIS to be prepared by a third party contractor on the impacts of River Gas of Utah, Inc. Coalbed Methane Project. The proposed project would be comprised of lands encompassing approximately 290 square miles located on a combination of Federal (BLM), state, and private lands within Carbon County, Utah. A public scoping meeting will be held September 8, 1994.

SUPPLEMENTARY INFORMATION: River Gas of Utah, Inc. of Northport, Alabama proposed to develop coalbed methane from a tract of land encompassing approximately 290 square miles located on lands managed by the Bureau of Land Management, the State of Utah, and private landowners. The proposed tract surrounds the City of Price. The northern portion of the tract would include the Federal unit known as Drunkards Wash Federal Unit UTU67921X.

River Gas proposes to drill up to 100 wells during 1995, and up to an additional 100 wells during each year thereafter. Up to 1,000 wells could be drilled during the life of the proposed project. Each well would be drilled to the Ferron coal formation, which occurs at a depth of about 1,200 to 3,800 feet.

The Bureau of Land Management's scoping process for this EIS will include: (1) Identification of issues to be addressed; (2) Identification of viable alternatives, and (3) Notifying interested groups, individuals and agencies so that additional information concerning these issues can be obtained.

A public scoping meeting will be held at 7 p.m. September 8, 1994, at the Court House in Price located at 200 East Main.

The scoping process will consist of a news release announcing the start of the EIS process; letters of invitation to participate in the scoping process; and a scoping document which further clarifies the proposed action, alternatives and significant issues being considered to be distributed to selected parties and available upon request.

Written comments will be accepted until September 30, 1994. Comments should be sent to the District Manager, Bureau of Land Management, P.O. Box 970, Moab, Utah 84532, Attention: Price Coalbed Methane Project.

FOR FURTHER INFORMATION CONTACT: Daryl Trotter, Planning and Environmental Coordinator, Moab District Office, 82 East Dogwood, P.O. Box 970, Moab, Utah 84532, (801) 259–6111.

Dated: August 4, 1994.

C. Delano Backus,

Acting District Manager.

[FR Doc. 94–19834 Filed 8–12–94; 8:45 am]

BILLING CODE 4310–DO–P

[AK–060–4230–03; FF–12631]

Realty Action: Renewal of Airport Lease, Prospect Creek, Alaska

AGENCY: Bureau of Land Management, Interior.

ACTION: Notice of realty action.

SUMMARY: The State of Alaska Department of Transportation and Public Facilities has requested renewal of an existing airport lease at Prospect Creek, Alaska. The existing lease expires on October 31, 1994. The State has requested renewal for an additional 20 years.

ADDRESSES: Written comments on this notice should be submitted to the District Manager, Bureau of Land Management, Arctic District Office, 1150 University Avenue, Fairbanks, Alaska 99709.

FOR FURTHER INFORMATION CONTACT: Paul J. Salvatore, Realty Specialist, at the address given above or at telephone (907) 474–2310.

SUPPLEMENTARY INFORMATION: The following public lands at Prospect, Alaska are being considered for lease to the State of Alaska for airport purposes under the Act of May 24, 1928, as amended (49 U.S.C., Appendix 211–213):

Fairbanks Meridian, Alaska

Township 23 North, Range 14 West,
Section 8 S½SE¼SE¼, SE¼SW¼SE¼,
Section 17 N½NE¼, W½SE¼NE¼, SW¼NE¼, SE¼NW¼, NW¼SE¼, SW¼, W½SW¼SE¼,
Section 18 E½SE¼SE¼,
Section 19 E½NE¼NE¼, E½SE¼NE¼, NE¼SE¼, NE¼SE¼SE¼,
Section 20 N½NW¼, SW¼NW¼, W½SE¼NW¼, NW¼SW¼, NW¼SW¼SW¼.

Containing 750.00 acres.

The above described lands have been, and remain, segregated from all appropriation under the public land laws, including the mining laws but not the mineral leasing laws. The lease would be renewed for an additional 20 years.

For a period of 45 days from the date of publication of this Notice in the **Federal Register**, interested parties may submit written comments to the District Manager at the above address. Any adverse comments will be reviewed by the State Director, who may vacate, sustain, or modify the realty action and issue a final determination. In the absence of any objection, the final determination of the Department of the Interior will be made in accordance with this Notice.

Dated: July 26, 1994.

Dee R. Ritchie,

Arctic District Manager.

[FR Doc. 94–19839 Filed 8–12–94; 8:45 am]

BILLING CODE 4310–JA–M

DEPARTMENT OF INTERIOR

Bureau of Land Management

[AK–060–4230–03; FF–12632]

Realty Action: Renewal of Airport Lease, Galbraith Lake, Alaska

AGENCY: Bureau of Land Management, Interior.

ACTION: Notice of realty action.

SUMMARY: The State of Alaska Department of Transportation and Public Facilities has requested renewal of an existing airport lease at Galbraith Lake, Alaska. The existing lease expires on October 31, 1994. The State has

requested renewal for an additional 20 years.

ADDRESSES: Written comments on this notice should be submitted to the District Manager, Bureau of Land Management, Arctic District Office, 1150 University Avenue, Fairbanks, Alaska 99709.

FOR FURTHER INFORMATION CONTACT:

Paul J. Salvatore, Realty Specialist, at the address given above or at telephone (907) 474–2310.

SUPPLEMENTARY INFORMATION: The following public lands at Galbraith Lake, Alaska, are being considered for lease to the State of Alaska for airport purposes under the Act of May 24, 1928, as amended (49 U.S.C., Appendix 211–213):

Umiat Meridian, Alaska

Township 11 South, Range 11 East,
Section 14 SW¼NW¼NW¼, W½SW¼NW¼, SE¼SW¼NW¼, W½SW¼, W½NE¼SW¼, W½SE¼SW¼, SE¼SE¼SW¼,
Section 15 S½NE¼NE¼, S½NE¼, NE¼SE¼, E½NW¼SE¼, SE¼SE¼,
Section 22 E½NE¼NE¼,
Section 23 NW¼, SW¼NW¼NE¼, W½SW¼NE¼, SE¼SW¼NE¼, E½NW¼SW¼, NE¼SW¼, NW¼SE¼, SW¼NE¼SE¼, SE¼SW¼, SW¼SE¼, W½SE¼SE¼, SE¼SE¼SE¼,
Section 26 E½NE¼NW¼, NW¼NE¼, N½NE¼NE¼.

Containing 890.00 acres.

The above described lands have been, and remain, segregated from all appropriation under the public land laws, including the mining laws but not the mineral leasing laws. The lease would be renewed for an additional 20 years.

For a period of 45 days from the date of publication of this Notice in the **Federal Register**, interested parties may submit written comments to the District Manager at the above address. Any adverse comments will be reviewed by the State Director, who may vacate, sustain, or modify the realty action and issue a final determination. In the absence of any objection, the final determination of the Department of the Interior will be made in accordance with this Notice.

Dated: July 26, 1994.

Dee R. Ritchie,

Arctic District Manager.

[FR Doc. 94–19840 Filed 8–12–94; 8:45 am]

BILLING CODE 4310–JA–M

INTERNATIONAL DEVELOPMENT COOPERATION AGENCY

Overseas Private Investment Corporation

Agency Report Form Under OMB Review

AGENCY: Overseas Private Investment Corporation, IDCA.

ACTION: Request for Comments.

SUMMARY: Under the provisions of the Paperwork Reduction Act (44 U.S.C. Chapter 35), agencies are required to submit information collection requests to OMB for review and approval, and to publish a notice in the Federal Register notifying the public that the Agency has made such a submission. The proposed form under review is summarized below.

DATES: Comments must be received within 14 calendar days of this notice. If you anticipate commenting on the form but find that the time to prepare will prevent you from submitting comments promptly, you should advise the OMB Reviewer and the Agency Submitting Officer of your intent as early as possible.

ADDRESSES: Copies of the subject form and the request for review submitted to OMB may be obtained from the Agency Submitting Officer. Comments on the form should be submitted to the Agency Submitting Officer and the OMB Reviewer.

FOR FURTHER INFORMATION CONTACT:

OPIC Agency Submitting Officer

Lena Paulsen, Manager, Information Center, Overseas Private Investment Corporation, 1100 New York Avenue, N.W., Washington, D.C. 20527; 202/366–8565.

OMB Reviewer

Jeff Hill, Office of Information and Regulatory Affairs, Office of Management and Budget, New Executive Office Building, Docket Library, Room 3201, Washington, D.C. 20503; 202/395–7340.

Summary of Form Under Review

Type of Request: Extension.
Title: Application for Political Risk Insurance for Hydrocarbon Projects.
Form Number: OPIC 77.
Frequency of Use: Once per investor per project.
Type of Respondents: Business or other institutions.
Standard Industrial Classification Codes: All.
Description of Affected Public: U.S. Companies investing overseas.
Reporting Hours: 12 hours per project.
Number of Responses: 15 per year.
Federal Cost: $3,750 per year.
Authority for Information Collection: Section 234 (a) of the Foreign Assistance Act of 1961, as amended.
Abstract (Needs and Uses): The Hydrocarbon Application is used to collect from eligible international petroleum companies data on proposed oil and gas projects, which is used in drafting political risk insurance contracts.

Dated: August 9, 1994.

James R. Offutt,

Assistant General Counsel, Department of Legal Affairs.

[FR Doc. 94–19858 Filed 8–12–94; 8:45 am]

BILLING CODE 3210–01–M

Agency Report Form Under OMB Review

AGENCY: Overseas Private Investment Corporation, IDCA.

ACTION: Request for comments.

SUMMARY: Under the provisions of the Paperwork Reduction Act (44 U.S.C. Chapter 35), agencies are required to submit information collection requests to OMB for review and approval, and to publish a notice in the **Federal Register** notifying the public that the Agency has made such a submission. The proposed form under review is summarized below.

DATES: Comments must be received within 14 calendar days of this notice. If you anticipate commenting on the form but find that the time to prepare will prevent you from submitting comments promptly, you should advise the OMB Reviewer and the Agency Submitting Officer of your intent as early as possible.

ADDRESSES: Copies of the subject form and the request for review submitted to OMB may be obtained from the Agency Submitting Officer. Comments on the form should be submitted to the Agency Submitting Officer and the OMB Reviewer.

FOR FURTHER INFORMATION CONTACT:

OPIC Agency Submitting Officer

Lena Paulsen, Manager, Information Center, Overseas Private Investment Corporation, 1100 New York Avenue NW., Washington, D.C. 20527; 202/336–8565.

OMB Reviewer

Jeff Hill, Office of Information and Regulatory Affairs, Office of Management and Budget, New Executive Office Building, Docket

Library, Room 3201, Washington, D.C. 20503; 202/395–7340.

Summary of Form Under Review

Type of Request: Extension.
Title: Contractors and Exporters Program: Insurance Application Form.
Form Number: OPIC 81.
Frequency of Use: Once per investor per project.
Type of Respondents: Business or other institutions.
Standard Industrial Classification Codes: All
Description of Affected Public: U.S. companies investing overseas.
Reporting Hours: 2 hours per project.
Number of Responses: 100 per year.
Federal Cost: $1,000 per year.
Authority for Information Collection: Section 234(a) of the Foreign Assistance Act of 1961, as amended.
Abstract (Needs and Uses): Pursuant to OPIC's statute, OPIC must screen each applicant for contractors and exporters insurance to determine the eligibility of the investor, assess the political risks of the project, and calculate the economic and developmental effects of the project in the host country and in the U.S. The OPIC Form 81 enables OPIC to collect this information in order to carry out Congress' mandate to manage the program prudently and to assure that no project is supported which has a significant adverse effect on U.S. employment.

Dated: August 9, 1994.

James R. Offutt,

Assistant General Counsel, Department of Legal Affairs.

[FR Doc. 94–19859 Filed 8–12–94; 8:45 am]

BILLING CODE 3210–01–M

INTERSTATE COMMERCE COMMISSION

[Docket No. AB–43 (Sub-No. 164X)]

Illinois Central Railroad Company—Abandonment Exemption—in Perry County, IL

Illinois Central Railroad Company (IC) has filed a notice of exemption under 49 CFR 1152 Subpart F—Exempt Abandonments to abandon approximately 6.2 miles of railroad known as the Pinckneyville to Pyatts line, between milepost G–60.19 (V.S. 3184+57) near Pinckneyville, IL and milepost G–66.43 (V.S. 280+79) near Pyatts, IL.

IC has certified that: (1) No local traffic has moved over the line for at least 2 years; (2) there is no overhead traffic on the line; (3) no formal complaint filed by a user of rail service on the line (or by a State or local government entity acting on behalf of such user) regarding cessation of service over the line either is pending with the Commission or with any U.S. District Court or has been decided in favor of the complainant within the 2-year period; and (4) the requirements at 49 CFR 1105.7 (environmental report), 49 CFR 1105.8 (historic report), 49 CFR 1105.11 (transmittal letter), 49 CFR 1105.12 (newspaper publication), and 49 CFR 1152.50(d)(1) (notice to governmental agencies) have been met.

As a condition to this exemption, any employee adversely affected by the abandonment shall be protected under Oregon Short Line R. Co.—Abandonment—Goshen, 360 I.C.C. 91 (1979). To address whether this condition adequately protects affected employees, a petition for partial revocation under 49 U.S.C. 10505(d) must be filed.

Provided no formal expression of intent to file an offer of financial assistance (OFA) has been received, this exemption will be effective on September 14, 1994, unless stayed pending reconsideration. Petitions to stay that do not involve environmental issues,[1] formal expressions of intent to file an OFA under 49 CFR 1152.27(c)(2),[2] and trail use/rail banking requests under 49 CFR 1152.29[3] must be filed by August 25, 1994. Petitions to reopen or requests for public use conditions under 49 CFR 1152.28 must be filed by September 6, 1994 with: Office of the Secretary, Case Control Branch, Interstate Commerce Commission, Washington, DC 20423.

A copy of any pleading filed with the Commission should be sent to applicant's representative: Myles L. Tobin, Associate General Counsel, Illinois Central Railroad Company, 455 North Cityfront Plaza Drive, 20th Floor, Chicago, IL 60611.

If the notice of exemption contains false or misleading information, the exemption is void *ab initio*.

IC has filed an environmental report which addresses the abandonment's effects, if any, on the environment and historic resources. The Section of Environmental Analysis (SEA) will issue an environmental assessment (EA) by August 19, 1994. Interested persons may obtain a copy of the EA by writing to SEA (Room 3219, Interstate Commerce Commission, Washington, DC 20423) or by calling Elaine Kaiser, Chief of SEA, at (202) 927–6248. Comments on environmental and historic preservation matters must be filed within 15 days after the EA is available to the public.

Environmental, historic preservation, public use, or trail use/rail banking conditions will be imposed, where appropriate, in a subsequent decision.

Decided: August 8, 1994.

By the Commission, David M. Konschnik, Director, Office of Proceedings.

Vernon A. Williams,

Acting Secretary.

[FR Doc. 94–19881 Filed 8–12–94; 8:45 am]

BILLING CODE 7035–01–P

[1] A stay will be issued routinely by the Commission in those proceedings where an informed decision on environmental issues (whether raised by a party or by the Commission's Section of Environmental Analysis in its independent investigation) cannot be made before the effective date of the notice of exemption. See Exemption of Out-of-Service Rail Lines, 5 I.C.C.2d 377 (1989). Any entity seeking a stay on environmental concerns is encouraged to file its request as soon as possible in order to permit this Commission to review and act on the request before the effective date of this exemption.

[2] See Exempt. of Rail Abandonment—Offers of Finan. Assist., 4 I.C.C.2d 164 (1987).

[3] The Commission will accept a late-filed trail use request as long as it retains jurisdiction to do so.

DEPARTMENT OF JUSTICE

Bureau of Justice Statistics

Continuation of Federal Justice Statistics Project

AGENCY: Office of Justice Programs, Bureau of Justice Statistics.

ACTION: Solicitation for award of cooperative agreement.

SUMMARY: The purpose of this notice is to announce a public solicitation for the continuation of the Bureau of Justice Statistics' (BJS) Federal Statistics program. The program serves as the national resource for data describing the processing of criminal cases through the Federal justice system. Under the program, data generated by Federal criminal justice agencies are collected, maintained, analyzed and archived. Data can also be linked across databases to permit more complex analyses. Regular annual reports are prepared based on data in the database and special tabulations are prepared pursuant to BJS direction. The project to be funded under the proposed cooperative agreement will continue current activities as modified in this solicitation.

DATES: Proposals must be postmarked on or before September 14, 1994.

ADDRESSES: Proposals should be mailed to: Applications Coordinator, Bureau of Justice Statistics, 633 Indiana Avenue NW., Room 1144–D, Washington DC 20531.

FOR FURTHER INFORMATION CONTACT: Carol G. Kaplan, Assistant Deputy Director, Bureau of Justice Statistics, (202) 307–0759.

SUPPLEMENTARY INFORMATION:

Background

The Bureau of Justice Statistics Federal Justice Statistics Program was initiated in 1982 to serve as a central resource for information describing the processing of Federal criminal cases and the characteristics of Federal offenders. The project collects data from different components of the Federal criminal justice system and traces the progress of cases from investigation, through prosecution, adjudication, sentencing and corrections. The project represents the primary BJS effort concerned solely with Federal transactions and responds directly to the legislative mandate that BJS "collect, analyze and disseminate comprehensive Federal justice transaction statistics (including statistics on issues of Federal justice interest such as public fraud and high technology crime) * * *" as set out in 42 USC 3732(c)(15).

In keeping with the original program plan which was designed to minimize data collection costs, no original data collection is supported under the program and data are obtained from operational Federal agencies, including the Executive Office for the United States Attorneys, the Administrative Office of the United States Courts, the Bureau of Prisons, etc. In order to trace the flow of cases, however, computer matching techniques have been developed which permit the linkage of data obtained from different sources. The development of this linkage program permits the analysis of particular issues which involve data contained in more than one data set.

Over the past eight years, a regular series of reports has been issued under the program. These include an annual "Compendium of Federal Criminal Justice Statistics", which describes transactions during the identified year, and an annual report, "Federal Criminal Case Processing", which describes trends in Federal case processing since 1980. Under the current award, BJS Special Reports have also been drafted for publication by BJS and project staff have responded to ad hoc BJS requests for specific data tabulations and analyses. A major study was also undertaken on the issue of race and sentencing under Federal Sentencing Guidelines and a report was prepared for BJS publication.

Objectives

The purpose of this award is to support the continuation of the basic activities initiated under the Federal Justice Statistics program. The program infrastructure will be modified, however, in order to maximize the utility of program resources. Specifically, under the proposed award, the recipient of funds will serve as the Federal Justice Resource Center. Under this arrangement, the recipient will continue to collect, maintain, and archive data from operational Federal justice agencies and to produce the regular annual BJS reports (Federal Justice Statistics Compendium, Federal Criminal Case Processing, and Federal Drug Case Processing). BJS Special Reports, however, will no longer be drafted by project staff. As an alternative, project staff will prepare data tabulations and analyses pursuant to BJS instructions for use in BJS Special Reports, Fact Sheets or other reports. BJS will be the primary author of reports prepared with data generated under the project and will specify the desired tables, tests or other data sets to be prepared for use in drafting BJS reports or undertaking BJS studies.

Type of Assistance

Assistance will be made available under a cooperative agreement.

Statutory Authority

The cooperative agreement to be awarded pursuant to this solicitation will be funded by the Bureau of Justice Statistics consistent with its mandate as set forth in 42 USC 3732; it will specify the involvement of BJS in the project.

Eligibility Requirements

Both profit making and nonprofit organizations may apply for funds. Consistent with OJP fiscal requirements, however, no fees may be charged against the project by profit making organizations.

Scope of Work

The objective of the proposed project is to continue basic activities initiated under the ongoing BJS Federal Statistics program with modifications as noted below.

Specifically, the recipient of funds will serve as the Federal Justice Statistics Resource Center. The Resource Center will:

1. Maintain and expand the Federal Justice Statistics Database. This will involve the collection, processing and maintenance of data provided by Federal agencies presently participating in the project (including the Executive Office for the United States Attorneys, Administrative Office of the United States Courts, Bureau of Prisons, United States Sentencing Commission, Drug Enforcement Administration and the Federal Bureau of Investigation) and negotiating with other Federal agencies (particularly those engaged in investigatory activities) to obtain additional data for inclusion in the Federal Statistics Database. The recipient of funds will also be responsible for processing data to meet uniform classification categories and for linking data to permit analysis of data obtained from different sources.

2. Prepare tapes and related documentation for archiving in the national archive maintained by BJS. Public use tapes shall be prepared in conformance with BJS standards for submission to the archive.

3. Prepare one edition of the BJS report, "Compendium of Federal Justice Statistics" and submit both text and tables in camera-ready format within a reasonable time after the reference year.

4. Prepare one edition of the BJS report, "Federal Criminal Case Processing", and submit both text and tables in camera-ready format within a reasonable time after the reference year.

5. Prepare one edition of the BJS report, "Federal Drug Case Processing", and submit both text and tables in camera-ready format within a reasonable time after the reference year.

6. Prepare data tabulations, analyses, data sets and other data manipulations in response to specific BJS requests relating to BJS Special Reports, Fact Sheets or other studies. BJS will have responsibility for the design of specific studies and for the identification of specific data elements and calculations required for study analysis. BJS will serve as the primary author of reports prepared with data generated under the project and may request that the project staff supply BJS with copies of edited and unedited data tapes and documentation supplied to the project. The media on which data sets are transmitted shall be designated by BJS.

7. Prepare a simple program to permit immediate access by all BJS staff to limited data elements in order to facilitate responses to specific public requests for data on particular crime categories or violations of the Federal Criminal Code.

All products are to be submitted on a schedule to be negotiated with BJS. It is anticipated, however, that products will be spaced throughout the period of the award.

Award Procedures

Proposals should describe, in appropriate detail, the procedures to be

undertaken in furtherance of each of the activities described under the Scope of Work. Information should focus on activities to be conducted during the initial 12 month period but should also include a more general discussion of three year objectives for the program. Information on staffing levels and qualifications should be included for each task and descriptions of experience relevant to the project should be included.

Applications will be competitively reviewed by a BJS selected panel which will make recommendations to the Director, BJS.

Final authority to enter into a cooperative agreement is reserved for the Director, BJS, or his designee, who may, in his discretion, determine that none of the applications shall be funded.

Applications will be evaluated on the overall extent to which they respond to criminal justice priorities, conform to the goals of the Federal Justice Statistics program and appear to be fiscally feasible and efficient. In particular, applicants will be evaluated on the basis of:

1. Knowledge of, and experience in, working with different components of the criminal justice system, (with particular emphasis on knowledge of operational, management and statistical data collected and maintained by various Federal criminal justice components).
2. Statistical expertise in the area of data analysis, data linkage, and research;
3. Experience in the application of statistical data to analysis of criminal justice issues;
4. Experience in developing and utilizing simulation models;
5. Demonstrated ability to prepare high quality statistical reports;
6. Availability of qualified professional and support staff and of suitable equipment for data processing and data manipulation;
7. Demonstrated fiscal, management and organizational capability suitable for providing sound program direction for this multi-faceted effort; and
8. Reasonableness of estimated costs for the total project and for individual cost categories.

Application and Awards Process

An original and three (3) copies of a full proposal must be submitted on SF 424 (Revision 1988) including the Certified Assurances. Proposals must be accompanied by OJP Form 4061/3, Certification Regarding Drug-Free Workplace and OJP Form 4061/2, Certification Regarding Disbarment, Suspension and Other Responsibility Matters. Applicants must complete the certificate regarding lobbying and, if appropriate, complete and submit Standard Form LLL, Disclosure of Lobbying Activities.

Proposals must include both narrative descriptions and a detailed budget. The narrative shall describe activities as discussed in the previous section. The budget shall contain detailed costs for personnel, fringe benefits, travel, equipment, supplies and other expenses. Contractual services or equipment must be procured through competition or the application must contain an applicable sole source justification.

Awards will be made for a period of 12 months with an option for two additional continuation years conditional upon availability of funds and the quality of the initial performance and products. Costs are estimated at not to exceed $650,000 for the initial 12-month period.

Lawrence A. Greenfeld,

Acting Director, Bureau of Justice Statistics.

[FR Doc. 94–19916 Filed 8–12–94; 8:45 am]

BILLING CODE 4410–18–P

Drug Enforcement Administration

Manufacturer of Controlled Substances; Application

Pursuant to § 1301.43(a) of title 21 of the Code of Federal Regulations (CFR), this is notice that on July 7, 1994, Ciba-Geigy Corporation, Pharmaceuticals Division Regulatory Compliance, 556 Morris Avenue, Summit, New Jersey 07901, made application to the Drug Enforcement Administration (DEA) for registration as a bulk manufacturer of the Schedule II controlled substance Methylphenidate (1724).

Any other such applicant and any person who is presently registered with DEA to manufacture such substances may file comments or objections to the issuance of the above application and may also file a written request for a hearing thereon in accordance with 21 CFR 1301.54 and in the form prescribed by 21 CFR 1316.47.

Any such comments, objections, or requests for a hearing may be addressed to the Deputy Assistant Administrator, Office of Diversion Control, Drug Enforcement Administration, United States Department of Justice, Washington, DC 20537, Attention: DEA Federal Register Representative (CCR), and must be filed no later than September 14, 1994.

Dated: August 5, 1994.

Gene R. Haislip,

Deputy Assistant Administrator, Office of Diversion Control, Drug Enforcement Administration.

[FR Doc. 94–19818 Filed 8–12–94; 8:45 am]

BILLING CODE 4410–09–M

[Docket No. 93–63]

Jude R. Hayes, M.D.; Denial of Application

On June 14, 1993, the Deputy Assistant Administrator, Office of Diversion Control, Drug Enforcement Administration (DEA), issued an Order to Show Cause to Jude R. Hayes, M.D. (Respondent), of Porterville, California, proposing to deny his application for registration as a practitioner. The Order to Show Cause alleged that Respondent's registration would be inconsistent with the public interest as that term is used in 21 U.S.C. 823(f).

Respondent, through counsel, requested a hearing on the issues raised by the Order to Show Cause, and the matter was placed on the docket of Administrative Law Judge Paul A. Tenney. Following prehearing procedures, a hearing was held in Sacramento, California, on December 8, 1993. On March 3, 1994, in his findings of fact, conclusions of law, and recommended ruling, the administrative law judge recommended that Respondent's application for DEA registration be granted, but that it be qualified by excluding Respondent's ability to write prescriptions for Schedule II controlled substances, and that consideration of an unqualified registration be given after a one year period.

On March 21, 1994, the Government filed exceptions to Judge Tenney's opinion, and on April 4, 1994, the administrative law judge transmitted the record to the Administrator. The Deputy Administrator has carefully considered the entire record in this matter and, pursuant to 21 CFR 1316.67, hereby issues his final order in this matter based upon findings of fact and conclusions of law as hereinafter set forth.

The administrative law judge found that Respondent is licensed to practice medicine in the State of California, and has been approved by Medicare, as well as a number of insurance companies, for treating patients under their programs. Since 1977, Respondent has also been employed by the State of California as Director of Laboratories at the Porterville Development Center.

The administrative law judge found that in the early 1980's, the California

Bureau of Narcotic Enforcement (BNE), the California Board of Medical Quality Assurance (Board), and the DEA conducted an investigation of Respondent's prescribing of Schedule II controlled substances. The investigation included five visits to Respondent's office by an undercover law enforcement officer. On four of those occasions, the undercover officer obtained prescriptions for controlled substances from the Respondent, despite indicating to the Respondent that she felt fine.

Following the undercover visits, the BNE and the Board consulted with a medical consultant regarding Respondent's prescribing practices. After examining 75 of Respondent's patient charts, the medical consultant found that in most instances, Respondent's prescribing would have caused the patients to become addicted to controlled substances.

Thereafter, a search warrant was issued, and Respondent's patient medical files were seized. DEA requested that four physicians review some of the medical files. The physicians found that in most cases, the quantity and duration of Schedule II controlled substances prescribed by Respondent for the conditions presented was inappropriate.

The administrative law judge found that Respondent was indicted in the United States District Court for the Eastern District of California, on 640 counts of prescribing Schedule II controlled substances not in the usual course of professional practice, in violation of 21 U.S.C. 841(a). On July 20, 1984, Respondent was convicted on 281 counts, and was sentenced to three years in prison with a consecutive three-year term of probation and fined $100,000. The convictions were affirmed on appeal to the Ninth Circuit. Respondent surrendered his DEA Certificates of Registration, AH9124568, AH2102046, and AH1565766 on February 28, 1985. On October 21, 1988, Respondent's motion to vacate and set aside the sentence was granted, and he was released from custody after serving one year. On December 11, 1991, Respondent's probation was terminated.

Following Respondent's conviction, the Board placed him on probation for five years, subject to certain terms and conditions, including: Respondent was prohibited from handling controlled substances, except for treatment of inpatients in an acute hospital setting; and Respondent was required to keep records of all controlled substances prescribed, dispensed or administered during the probation period. Respondent successfully completed probation, and effective April 18, 1990, his medical privileges were fully restored by the Board.

On September 17, 1985, Respondent was notified by the California Department of Health Services (Department) that he was suspended as a Medi-Cal provider. Medi-Cal is a program administered by the Department that provides health coverage for indigent patients. When Respondent requested reinstatement into the program, an investigation was conducted by the Department in 1991 of Respondent's billing procedures. The investigation revealed that: Respondent continued to treat Medi-Cal patients by ordering or allowing other physicians to sign prescriptions for Respondent's patients when those physicians did not see the patients; Respondent used other physicians' presigned prescription forms; and Respondent ordered or allowed other physicians to use their medical provider numbers to bill Medi-Cal for treatment of Respondent's patients when the provider did not see or treat the patients. As a result of the Department's findings, Respondent's application for reinstatement into the Medi-Cal program was denied, and he remains without Medi-Cal privileges.

During the hearing in this matter, the Government placed into evidence transcripts of a medical expert's opinion testimony presented at Respondent's criminal trial. The testimony concerned the medical expert's review of the medical files for 20 patients mentioned in the indictment. The medical expert found that, with the exception of one patient, Respondent's prescribing of controlled substances was not for a legitimate medical purpose. In response, Respondent testified at the hearing that almost all of the patients involved suffered from a chronically painful condition.

At the hearing, Respondent placed into evidence a report prepared by a California State medical organization, and an article published in a medical journal, both detailing the nature of chronic pain. Respondent also placed into evidence a bill enacted in California, intended to authorize physicians to better treat patients suffering from chronic pain. Respondent testified that the bill provides treatment guidelines that did not previously exist.

Respondent testified that if his application for DEA registration is approved, he would prescribe controlled substances in a different manner, and would also use non-controlled drugs in the treatment of pain. Respondent also testified that he would refer patients to pain clinics, which primarily prescribe Schedule II controlled substances.

Pursuant to 21 U.S.C. 823(f), the Deputy Administrator may deny any application for such registration, if he determines that the continued registration would be inconsistent with the public interest. In determining the public interest, the following factors are considered:

(1) The recommendation of the appropriate State licensing board or professional disciplinary authority.

(2) The applicant's experience in dispensing controlled substances.

(3) The applicant's conviction record under Federal or State laws relating to the distribution, or dispensing of controlled substances.

(4) Compliance with applicable State, Federal, or local laws relating to controlled substances.

(5) Such other conduct which may threaten the public health and safety

It is well established that these factors are to be considered in the disjunctive, i.e., the Deputy Administrator may properly rely on any one or a combination of the factors and give each factor the weight he deems appropriate. See Henry J. Schwarz, Jr., M.D., Docket No. 88–42, 54 FR 16422 (1989).

In considering whether grounds exist to deny Respondent's application for DEA registration, the administrative law judge found that the Government had made a *prima facie* case with respect to factors one through five. Factor one is applicable in light of evidence regarding the stipulation and order entered by the Board in which Respondent's medical certificate was placed on probation for five years; factors two through five are applicable based upon Respondent's conviction on 281 counts of unlawfully prescribing Schedule II controlled substances; factor five is also applicable in light of Respondent's exclusion from the Medi-Cal program.

In mitigation of the above, the administrative law judge noted that Respondent surrendered his previous DEA registrations in February 1985; that he completed probation imposed by the Board in April 1990; that probation in Respondent's criminal case was terminated in December 1991; and that his current Medi-Cal exclusion is based on events that occurred in 1986. The administrative law judge also found that while Respondent demonstrated no explicit expressions of remorse, Respondent has indicated that if given a DEA registration, he will do things differently, including referring chronic pain sufferers to pain clinics and using non-controlled medication in the treatment of pain.

The administrative law judge therefore recommended that Respondent be granted a qualified DEA registration, excluding Respondent's authority to prescribe Schedule II controlled substances. The administrative law judge further recommended that consideration be given to any application after one year for an unqualified registration with the benefit of experience gained during the year.

The Government filed exceptions to the administrative law judge's recommendation that Respondent be granted a qualified registration. The Government stressed the egregiousness of Respondent's actions which led to his conviction on 281 counts of 21 U.S.C. 841(a)(1), including maintaining at least one patient on controlled substances despite Respondent's knowledge that the patient had five previous drug overdoses and that Respondent did not keep records on the patient.

Additionally, the Government emphasized that Respondent's violations, his earlier state suspension by using other physicians' provider numbers and pre-signed prescription forms are indications that Respondent cannot be entrusted with a DEA registration. The Government further argued that restricting Respondent's Schedule II prescribing privileges does not restrict his access to Schedule II controlled substances through his ability to dispense or administer these drugs.

The Deputy Administrator having considered the entire record adopts the administrative law judge's findings of fact and conclusions of law, however, disagrees with both aspects of the recommended ruling of a qualified registration and favorable consideration to an unqualified registration after one year. The Deputy Administrator finds that Respondent's registration with DEA would be inconsistent with the public interest based upon the reprehensible prescribing practices which led to his conviction of 281 counts of unlawful distribution of controlled substances; the fact that Respondent is still excluded from the Medi-Cal program; that Respondent treated Medi-Cal patients without authorization and used other physicians' pre-signed prescription forms; Respondent's complete lack of remorse; and his total disregard for rules and regulations governing the handling of controlled substances.

Accordingly, the Deputy Administrator of the Drug Enforcement Administration, pursuant to the authority vested in him by 21 U.S.C. 823 and 824 and 28 CFR 0.100(b) and 0.104 (59 FR 23637), hereby orders that the application for registration, executed by Jude R. Hayes, M.D., be, and it hereby is, denied. This order is effective August 15, 1994.

Dated: August 8, 1994.

Stephen H. Greene,

Deputy Administrator.

[FR Doc. 94–19816 Filed 8–12–94; 8:45 am]

BILLING CODE 4410–09–M

[Docket No. 93–67]

Robert J. Kilian, M.D.; Continuation of Registration and Reprimand

On July 15, 1993, the Deputy Assistant Administrator (then-Director), Office of Diversion Control, Drug Enforcement Administration (DEA), directed an Order to Show Cause to Robert J. Kilian, M.D. (Respondent), proposing to revoke his DEA Certificate of Registration, BK0304131, as a practitioner under 21 U.S.C. 824(a)(4), and to deny any pending applications under 21 U.S.C. 823(f). The Order to Show Cause alleged that the continued registration of Respondent would be inconsistent with the public interest.

Respondent requested a hearing on the issues raised in the Order to Show Cause. The matter was docketed before Administrative Law Judge Paul A. Tenney. Following prehearing procedures, a hearing was held in Houston, Texas on December 16, 1993.

On March 16, 1994, Judge Tenney issued his findings of fact, conclusions of law, and recommended ruling in which he recommended that Respondent's registration be continued and that he be given a formal reprimand. No exceptions were filed to this opinion, and on April 22, 1994, the administrative law judge transmitted the record of the proceedings to the Administrator.

The Deputy Administrator has considered the record in its entirety and, pursuant to 21 CFR 1316.67, enters his final order in this matter, based on findings of fact and conclusions of law as hereinafter set forth.

The administrative law judge found that Respondent received a medical degree from the University of Texas Medical Branch in 1967. Respondent subsequently completed an orthopedic surgery residency, and began private medical practice in Lake Jackson, Texas in 1972. Respondent is board-certified in orthopedic surgery, and a member of the American Academy of Orthopedic Surgeons and of the American Academy of Pain Management.

The administrative law judge found that on March 5, 1991, a DEA undercover agent visited Respondent's medical office in Lake Jackson. The undercover agent asserted that he had various knee, neck, and shoulder problems due to a past car accident and asked for chloral hydrate and Valium, both Schedule IV controlled substances. The undercover agent mentioned that his previous doctor had told him that he no longer needed medication and had stopped giving him these substances approximately three and a half weeks earlier. Respondent conducted a physical examination limited to the agent's knee and the prescribed a non-controlled anti-inflammatory, as well as, chloral hydrate and Valium.

The undercover agent returned to Respondent's office on March 26, 1991, and stated that he had not used the anti-inflammatory and that his knee was not hurting, but that the Valium helped him to relax after exercise workouts. Respondent did not perform any physical examination, but did authorize another prescription for Valium and chloral hydrate. The undercover agent returned on May 14, 1991, and stated that the medications made him "feel good" and asked for larger quantities, but Respondent refused to prescribe the larger amounts. Subsequently, on May 20, June 6, and July 3, 1991, DEA agents visited a local pharmacist and asked that the pharmacist telephone Respondent for refill authorization for the prescriptions issued to the undercover agent. On each occasion, agents picked up 14 dosage units of chloral hydrate and 30 dosage units of Valium which had been authorized by Respondent.

On August 28, 1991, the undercover agent visited Respondent and complained of pain in his knee and shoulder. He asked for pain medication and steroids. Respondent provided the patient with chloral hydrate and Valium, as well as, Lortab, a Schedule II narcotic controlled substance, but refused to prescribe steroids.

On August 1, 1991, another DEA undercover agent visited Respondent's medical office and requested Valium. The undercover agent stated that he had no real problem, but that he had used some of the other undercover agent's Valium after running at the gym and that it had helped to relax him. Respondent did not examine the agent, but gave him a prescription for Valium to be taken after working out. Respondent refused to prescribe chloral hydrate to the agent. On September 11, 1991, the second undercover agent returned to Respondent's office and received another prescription for Valium. He also requested Tylenol with

codeine, which Respondent refused to provide.

The administrative law judge found that Respondent testified that he uses Valium in his practice as a muscle relaxant, and believes that it is not addictive when used in the dosages he prescribes. Respondent testified that he felt he was treating the second undercover agent for post-exercise muscle spasm. Respondent also testified that if medication helps patients with their recreation by making them "more comfortable" so that they can exercise, then he will prescribe that medication.

At the hearing in this matter, the Government introduced the expert testimony of a Houston orthopedic surgeon. The Government medical expert testified that his review of the patient records of the undercover agents indicated that either they did not have a specific complaint or that their complaints were minimal. He noted that Respondent continued to prescribe the same strength and quantity of medication even when the first undercover agent stated that he was doing better. Furthermore, the expert found that the medical histories and physical examinations performed by Respondent were limited and not properly documented, and that he found no medical indications that would warrant the use of either chloral hydrate, a sleep medication, or Valium, which he called an addictive and commonly abused drug. He stated that in his opinion there was little detail as to why the first undercover agent was treated with medication and that the second undercover agent did not demonstrate muscle spasm. The Government medical expert concluded that Respondent's prescribing practices were not for a legitimate medical purpose nor in the usual course of professional conduct.

Respondent introduced the testimony of a pain management specialist. The pain management specialist testified concerning the proper therapeutic use of chloral hydrate and Valium. He also testified that with the low daily dosages of Valium given to the undercover agents by Respondent, it would be highly unlikely that addiction would result. He concluded that Respondent made a reasonable diagnosis and prescribed a reasonable orthopedic treatment regimen that would be in the course of usual practice.

Respondent also introduced the testimony of an orthopedic surgeon. He testified that he completed orthopedic residency with Respondent at the University of Texas Medical Branch. The orthopedic expert testified as to the usual conduct of orthopedic physical examination and the proper therapeutic use of Valium. He testified also that he would not prescribe Valium for muscle tightness, but if it helped the patient, it would be appropriate over a short period of time with close monitoring of the patient. He concluded that Respondent's prescriptions were reasonable and appropriate and had a valid and legal medical purpose.

The administrative law judge assigned substantial weight to the testimony of Respondent's orthopedic expert witness. Judge Tenney found that the prescriptions issued to the first undercover agent between March and August were issued for a legitimate medical purpose. However, Respondent treated the undercover agent for over five months and continue to prescribe Valium without an office visit. Judge Tenney further found that Respondent's treatment of the second undercover agent with Valium lacked a legitimate medical purpose since the patient gave no indication of pain and was not physically examined.

The administrative law judge found that Respondent and the Texas State Board of Medical Examiners (Board) entered an Agreed Order on November 19, 1993. The order stated that during 1984 through 1992, Respondent prescribed controlled substances to fifteen patients and "failed to take adequate histories, to take further diagnostic studies as indicated, maintain a comprehensive pain and drug abuse management plan, appropriately document the medical records to justify treatment, and perform periodic examinations to justify the continuance of such drug therapy." The Board publicly reprimanded Respondent and ordered that he maintain adequate medical records, provide for monitoring of his practice and complete a remedial pharmacology course and fifty hours of Continuing Medical Education Courses annually.

Under 21 U.S.C. 824(a)(4), the Deputy Administrator of the Drug Enforcement Administration may revoke the registration of a practitioner if he determines that such registration would be inconsistent with the public interest as determined under 21 U.S.C. 823.

Pursuant to 21 U.S.C. 823(f), "[i]n determining the public interest, the following factors shall be considered:

(1) The recommendation of the appropriate State licensing board or professional disciplinary authority.

(2) The applicant's experience in dispensing, or conducting research with respect to controlled substances.

(3) The applicant's conviction record under Federal or State laws relating to the manufacture, distribution, or dispensing of controlled substances.

(4) Compliance with applicable State, Federal, or local laws relating to controlled substances.

(5) Such other conduct which may threaten the public health and safety."

It is well established that these factors are to be considered in the disjunctive, i.e., the Deputy Administrator may properly rely on any one or a combination of factors, and give each factor the weight he deems appropriate. Henry J. Schwarz, Jr., M.D., 54 FR 16422 (1989).

Of the stated factors, the administrative law judge found that the Government established a prima facie case for revocation under 21 U.S.C. 823(f)(2), (4) and (5). Judge Tenney found that the evidence supported a finding that Respondent's experience with regard to dispensing controlled substances included violations of 21 CFR 1306.04(a) with respect to the undercover agents. Judge Tenney found that the persuasive expert testimony indicated that Valium is appropriate for treatment for short periods of time and when closely monitored.

The administrative law judge concluded that Respondent had prescribed Valium for long periods of time with inadequate monitoring, but stated that Respondent argued convincingly that the Agreed Order with the Board provides a level of assurance that the "public interest" will be protected.

The Deputy Administrator adopts the findings of fact, conclusions of law, and recommended ruling of Administrative Law Judge Tenney in its entirety. The Deputy Administrator agrees that the public interest can be adequately protected if Respondent carries out the mandates of the Board Agreed Order. In taking this action, the Deputy Administrator expects that Respondent will continue to be in full compliance with the November 19, 1993 Agreed Order between Respondent and the Texas Board of Medical Examiners.

Pursuant to 21 U.S.C. 829, 21 U.S.C. 842(a), and 21 CFR 1306.04(a), a prescription for controlled substances, in order to be effective, must be issued for a legitimate medical purpose and in the usual course of professional medical practice. The Deputy Administrator concludes that Respondent's prescribing practices regarding the undercover agents included violations of the Controlled Substances Act. Therefore, the Deputy Administrator finds that a reprimand is appropriate in this case, and orders that Respondent, Robert J. Kilian, M.D., be, and he hereby is, reprimanded.

Accordingly, the Deputy Administrator of the Drug Enforcement Administration, pursuant to the authority vested in him by 21 U.S.C. 823 and 824 and 28 CFR 0.100(b) and 0.104 (59 FR 23637), hereby orders that DEA Certificate of Registration, BK0304131, issued to Robert J. Kilian, M.D., be and it hereby is, continued, and that any pending applications, be, and they hereby are, granted. This order is effective August 15, 1994.

Dated: August 8, 1994.

Stephen H. Greene,

Deputy Administrator.

[FR Doc. 94–19817 Filed 8–12–94; 8:45 am]

BILLING CODE 4410–09–M

[Docket No. 93–45]

Demetrius Pawlyszyn, M.D.; Revocation of Registration

On April 12, 1993, the Deputy Assistant Administrator, Office of Diversion Control, Drug Enforcement Administration (DEA), issued an Order to Show Cause to Demetrius Pawlyszyn, M.D., (Respondent), of Cleveland, Ohio. The Order to Show Cause sought to revoke Respondent's DEA Certificate of Registration, AP2933011, and deny any pending applications for registration. The Order to Show Cause alleged that Respondent's continued registration would be inconsistent with the public interest as that term is used in 21 U.S.C. 823(f).

The Order to Show Cause asserted in part that Respondent's continued registration would be inconsistent with the public interest in light of the Ohio State Medical Board's (Board) concern regarding Respondent's prescribing practices; Respondents' continued prescribing of narcotics and other controlled substances without adequate medical examination and without adequate medical justification; Respondent's prescribing of controlled substances to individuals cooperating with DEA in May and June of 1990; Respondent's July 1990 indictment in the Cuyahoga County Common Pleas Court on numerous counts of illegally processing drug documents and drug trafficking; Respondent's prescribing of controlled substances in June and July of 1991 to individuals working with the Cuyahoga County Sheriff's Office without adequate medical justification; Respondent's prescribing of controlled substances to an undercover agent of the Medina County Drug Task Force without a physical examination and in the absence of a legitimate medical justification; Respondent's October 1992 indictment in the Cuyahoga County Common Pleas Court on 62 counts of drug trafficking and 13 counts of illegal processing of drug documents.

Respondent, through counsel, requested a hearing on the allegations raised in the Order to Show Cause and the matter was placed on the docket of Administrative Law Judge Paul A. Tenney. On January 4 and 5, 1994, a hearing was held in Cleveland, Ohio. On April 18, 1994, the administrative law judge issued his findings of fact, conclusions of law, and recommended ruling. Respondent filed exceptions to the recommended ruling on June 13, 1994. On June 20, 1994, the administrative law judge transmitted the record in this proceeding to the Deputy Administrator. Having considered the record in its entirety, and pursuant to 21 CFR 1316.67, the Deputy Administrator hereby issues his final order in this matter based upon the findings of fact and conclusions of law set forth below.

At the hearing, a DEA investigator testified that in August 1989, she began an investigation of Respondent after receiving complaints about Respondent from an anonymous telephone caller. Later that month, the investigator visited several pharmacies near Respondent's medical office and reviewed prescriptions written by Respondent. The investigator noted that Respondent had written numerous prescriptions for two and three members of the same family an that Respondent had a pattern of writing combinations of prescriptions for each patient. The typical combination included prescriptions for Tylenol #4 with codeine, a Schedule III controlled substance, Hycodan, another Schedule III controlled substance, and Valium, a Schedule IV controlled substance.

The DEA investigator contacted an investigator with the Board in September 1989. The Board investigator stated that the Board had held three informal hearings between June 1982 and August 1983 relating to Respondent's excessive prescribing of controlled substances. The hearings also addressed Respondent's prescribing controlled substances to known drug addicts and the numerous complaints that the Board had received from pharmacists concerned about Respondent's prescribing practices. The Cuyahoga County Sheriff's Office (Sheriff's Office) received similar complaints.

The DEA investigator was informed that in 1982, the Board entered into a Consent Agreement with Respondent. The agreement provided that Respondent "shall not prescribe Schedule II drugs, Tussionex, and Talwin except for patients over fifty (50) years of age and in emergency cases for patients of all ages." The DEA investigator testified at the hearing in this matter that Respondent subsequently wrote prescriptions for Talwin to four individuals, each under the age of 50.

In 1990, a joint investigation was initiated between DEA and the Sheriff's Office. An individual cooperating with the Sheriff's Office agreed to assist in the investigation and on May 5, 1990, visited Respondent's office. The individual was equipped with a transmitter and the entire visit was monitored by the DEA investigator. The DEA investigator did not hear any indication that Respondent conducted a physical examination, nor did she hear Respondent question the individual about her medical history or allergies. Respondent supplied the individual with prescriptions for Tylenol #4 with codeine, Valium, Soma, and Hycodan, and charged $25.

The same individual returned to Respondent's office on June 1, 1990, again wearing a transmitter which was monitored by the DEA investigator. Respondent told the individual that it had not been 30 days since her last visit. Nonetheless, Respondent provided the individual with new prescriptions for Tylenol #4 with codeine, Hycodan, and Valium. The individual returned to Respondent's office on July 6, 1990. Respondent announced in the waiting room that he would not see anyone who had visited less than 30 days prior. When he saw the individual, Respondent told her that a drug enforcement agency was investigating her and that he could not help her. Respondent suggested that she return in about a year.

A State search warrant was executed at Respondent's office on July 13, 1990. Respondent was arrested on July 17, 1990, and charged with eight counts of illegally processing drug documents in violation of Ohio Revised Code Section 2925.03.

In September 1990, another cooperating individual visited Respondent's office. When Respondent asked the individual what the problem was, the individual stated that he had back pain. Respondent then asked the individual what he wanted and the individual requested 60 Vicodin, a Schedule III controlled substance. Respondent then wrote the individual a prescription for 30 Vicodin. No physical examination was conducted. The same individual returned to Respondent's office on October 24, 1990, this time wearing a transmitter. The visit was monitored by the DEA investigator. Respondent told the individual that he

had to be careful because the police were all over and had been to his office. Without asking the individual to undress, Respondent ran his hands up and down the individual's back and then wrote him a prescription for Darvocet, a Schedule IV controlled substance.

On June 4, 1991, a third cooperating individual visited Respondent's office. The individual wore a transmitter and the visit was monitored by the DEA investigator. Respondent asked the individual if he wanted Vicodin. The individual replied affirmatively and was given a prescription for Vicodin. The DEA investigator did not hear any indication that a physical examination had taken place.

At the hearing in this matter, a narcotics officer with the Medina County Drug Task Force testified that he visited Respondent's office in an undercover capacity on August 21, 1991. The agent was introduced to Respondent by one of Respondent's patients. Respondent met with the patient and the undercover agent in his office. The entire visit was taped. Respondent asked the agent "What's your problem?" The agent replied that he was "okay" but had suffered from back pain in the past. When asked what he wanted, the agent told Respondent he wanted Vicodin. Respondent then asked if he wanted the regular or extra strength. The agent replied that he wanted extra strength and Respondent wrote the prescription for him. No physical examination was conducted; in fact, Respondent never got up from his chair during the visit. Respondent charged $25 for the prescription. Respondent told the agent that he could not return until 30 days had passed. The entire visit lasted less than four minutes.

The agent returned to Respondent's office on September 20, 1991. The agent was taken to an examining room where Respondent felt around the agent's torso, waist, shins, and ankles. Respondent refused to provide the agent with a prescription, stating that he (Respondent) would need an x-ray of the agent. Respondent told the agent that "people may phone police or something" and that he (Respondent) "had to cover."

In October, November, and December of 1992, numerous individuals provided law enforcement officers with statements regarding Respondent's prescription writing. Many of the individuals stated that they were addicted to drugs and went to see Respondent because he would provide them with prescriptions. Some individuals stated that they would obtain several prescriptions from Respondent once or twice a month. The visits often lasted less than 10 minutes. On individual stated that he continued to see Respondent because it was "easy" while another individual stated that "you said what you had to say in order to get what you needed." Yet another individual stated that he started going to Respondent because he heard that Respondent was a "writer."

On October 21, 1992, Respondent was indicted in the Cuyahoga County Common Pleas Court on 75 counts of drug trafficking and illegal processing of drug documents. In preparation for Respondent's criminal trial, the DEA investigator and Board investigators conducted a pharmacy survey for prescriptions written by Respondent. Over one seven-month period, the investigators found that Respondent had written at least 4,801 prescriptions for controlled substances. During the criminal trial, a medical expert testified that after reviewing 33 of Respondent's patient files, he concluded that Respondent had engaged in abusive prescription practices for controlled substances. The doctor also testified that the combinations of drugs prescribed by Respondent, often on a monthly basis, did not constitute good medical practice. Because some of the drugs prescribed contained the same active ingredient, the doctor stated that there would be no therapeutic reason for prescribing both. On March 24, 1993, Respondent was acquitted of all counts following a bench trial.

The DEA investigator continued her investigation despite Respondent's acquittal. In November 1993, the DEA investigator went to a local pharmacy and reviewed all prescriptions written by Respondent between June 1, 1993, and November 29, 1993. During this time period, Respondent wrote 2,801 prescriptions, 2,393 of which were for controlled substances. At another local pharmacy, the DEA investigator discovered that Respondent had written 1,205 prescriptions between March 1, 1993 and November 30, 1993. Of these prescriptions, 988 were for controlled substances.

Pursuant to 21 U.S.C. 823(f) and 824(a)(4), the Deputy Administrator may revoke a DEA Certificate of Registration or deny an application for registration if he determines that the registration would be inconsistent with the public interest. Section 823(f) requires that the following factors be considered: (1) The recommendation of the appropriate State licensing board or professional disciplinary authority; (2) the applicant's experience in dispensing, or conducting research with respect to controlled substances; (3) the applicant's conviction record under Federal or State laws relating to the manufacture, distribution, or dispensing of controlled substances; (4) compliance with applicable State, Federal or local laws relating to controlled substances; and (5) such other conduct which may threaten the public health and safety.

The Deputy Administrator may rely on any one or any combination of these factors when determining whether an application should be denied or a registration revoked. See Neveille H. Williams, D.D.S., 51 FR 17556 (1986); Anne L. Hendricks, M.D., 51 FR 41030 (1986). The administrative law judge correctly found that factors (1), (2), (4), and (5) were relevant to a determination of whether Respondent's continued registration would be in the public interest.

Although the Board did not revoke Respondent's medical license, it did hold several hearings to address Respondent's indiscriminate prescribing practices. The Board entered into a Consent Agreement with Respondent, an agreement with which Respondent refused to comply. Respondent's prescribing practices are clearly a danger to both his patients and the public and evidence a serious lack of understanding of the possible abuse and diversion of these powerful controlled substances. Despite Respondent's acquittal of all criminal charges, his failure to abide by the Board's Consent Agreement and his pattern of prescribing without conducting an examination and in the absence of legitimate medical need demonstrate that he cannot be trusted to comply with the laws relating to controlled substances. Finally, Respondent's incriminating statements to the undercover agent indicate his knowledge of the illegality of his acts. Responsent's conduct constitutes a grave and alarming threat to the public health and safety.

In his exceptions to the recommended decision of the administrative law judge, Respondent argues that the Government failed to meet its burden of proof. Respondent claims that he "has had no problem with the Medical Board since" the Consent Agreement signed in 1982. In light of the overwhelming evidence presented at the administrative hearing, the Board's failure to revoke Respondent's medical license, while considered by the administrative law judge and the Deputy Administrator, is inapposite. The administrative law judge found, and the Deputy Administrator agrees, that the Government met its burden of proof

with respect to factors (1), (2), (4), and (5) of 21 U.S.C. 823(f).

The Deputy Administrator agrees with the administrative law judge that, after considering the applicable factors pursuant to 21 U.S.C. 823(f), Respondent's continued registration would not be in the public interest and adopts his recommended decision in its entirety. Accordingly, the Deputy Administrator of the Drug Enforcement Administration, pursuant to the authority vested in him by 21 U.S.C. 823 and 824 and 28 CFR 0.100(b) and 0.104 (59 FR 23637), hereby orders that Demetrius Pawlyszyn's DEA Certificate of Registration, AP20333011, be, and it hereby is, revoke, and that any pending applications for registration be, and they hereby are, denied. This order is effective September 14, 1994.

Dated: August 8, 1994.

Stephen H. Greene,

Deputy Administrator.

[FR Doc. 94–19815 Filed 8–12–94; 8:45 am]

BILLING CODE 4410–09–P

Importation of Controlled Substances; Application

Pursuant to Section 1008 of the Controlled Substances Import and Export Act (21 U.S.C. 958(i)), the Attorney General shall, prior to issuing a registration under this Section to a bulk manufacturer of a controlled substance in Schedule I or II and prior to issuing a regulation under Section 1002(a) authorizing the importation of such a substance, provide manufacturers holding registrations for the bulk manufacture of the substance an opportunity for a hearing.

Therefore, in accordance with § 1311.42 of title 21, Code of Federal Regulations (CFR), notice is hereby given that on May 14, 1994, Sigma Chemical Company, 3500 Dekalb Street, St. Louis, Missouri 63118, made written request to the Drug Enforcement Administration to be registered as an importer of the basic classes of controlled substances listed below:

Drug	Schedule
4-Bromo-2,5-dimethoxphenethylamine (7392).	I
N-Hydroxy-3,4-methylenedioxyamphetamine (7402).	I

Any manufacturer holding, or applying for, registration as a bulk manufacturer of this basic class of controlled substance may file written comments on or objections to the application described above and may, at the same time, file a written request for a hearing on such application in accordance with 21 CFR 1301.54 in such form as prescribed by 21 CFR 1316.47.

Any such comments, objections, or requests for a hearing may be addressed to the Deputy Assistant Administrator, Office of Diversion Control, Drug Enforcement Administration, United States Department of Justice, Washington, D.C. 20537, Attention: DEA Federal Register Representative (CCR), and must be filed no later than September 14, 1994.

This procedure is to be conducted simultaneously with and independent of the procedures described in 21 CFR 1311.42(b), (c), (d), (e), and (f). As noted in a previous notice at 40 FR 43745–46, (September 23, 1975), all applicants for registration to import a basic class of any controlled substance in Schedule I or II are and will continue to be required to demonstrate to the Deputy Assistant Administrator, Office of Diversion Control, Drug Enforcement Administration that the requirements for such registration pursuant to 21 U.S.C. 958(a), 21 U.S.C. 823(a), and 21 CFR 1311.42(a), (b), (c), (d), (e), and (f) are satisfied.

Dated: August 5, 1994.

Gene R. Haislip,

Deputy Assistant Administrator, Office of Diversion Control, Drug Enforcement Administration.

[FR Doc. 94–19819 Filed 8–12–94; 8:45 am]

BILLING CODE 4410–09–M

DEPARTMENT OF LABOR

Employment and Training Administration

Investigations Regarding Certifications of Eligibility to Apply for Worker Adjustment Assistance

Petitions have been filed with the Secretary of Labor under Section 221(a) of the Trade Act of 1974 ("the Act") and are identified in the Appendix to this notice. Upon receipt of these petitions, the Director of the Office of Trade Adjustment Assistance, Employment and Training Administration, has instituted investigations pursuant to Section 221(a) of the Act.

The purpose of each of the investigations is to determine whether the workers are eligible to apply for adjustment assistance under Title II, Chapter 2, of the Act. The investigations will further relate, as appropriate, to the determination of the date on which total or partial separations began or threatened to begin and the subdivision of the firm involved.

The petitioners or any other persons showing a substantial interest in the subject matter of the investigations may request a public hearing, provided such request is filed in writing with the Director, Office of Trade Adjustment Assistance, at the address shown below, not later than August 25, 1994.

Interested persons are invited to submit written comments regarding the subject matter of the investigations to the Director, Office of Trade Adjustment Assistance, at the address shown below, not later than August 25, 1994.

The petitions filed in this case are available for inspection at the Office of the Director, Office of Trade Adjustment Assistance, Employment and Training Administration, U.S. Department of Labor, 200 Constitution Avenue, N.W., Washington, D.C. 20210.

Signed at Washington, D.C. this 1st day of August, 1994.

Violet Thompson,

Deputy Director, Office of Trade Adjustment Assistance.

APPENDIX

Petitioner (union/workers/firm)	Location	Date received	Date of petition	Petition No.	Articles produced
Gordon County Farm (Wkrs)	Calhoun, GA	08/01/94	07/22/94	30,147	Processed Meats.
Moore Business Forms (Wkrs)	Buckhannon, WV	08/01/94	07/22/94	30,148	Business Forms.
Chatam County of Wisconsin (Wkrs).	Beloit, WI	08/01/94	07/21/94	30,149	Wood Dinette Sets, Buffets, etc.
Heekin Can, Inc/Ball Corp (Wkrs)	Augusta, WI	08/01/94	07/19/94	30,150	Cans.
Digital Equipment Corp (Co)	Westfield, MA	08/01/94	07/18/94	30,151	Computer Housings & Cabinets.
Williamson-Dickie Mfg Co (Wkrs)	Prosperity, SC	08/01/94	07/20/94	30,152	Men's Workwear.
USA Classic, Inc (Wkrs)	Stantonville, TN	08/01/94	07/18/94	30,153	Ladies' & Children's Sportswear.
Sanofi Bio Industries (Wkrs)	Wapato, WA	08/01/94	07/20/94	30,154	Apple Juice Concentrate.

APPENDIX—Continued

Petitioner (union/workers/firm)	Location	Date received	Date of petition	Petition No.	Articles produced
Ohio Beef Corp (UFCW)	Sandusky, OH	08/01/94	07/21/94	30,155	Beef, Kosher & Specialty Cut.
Kinney Shoe Corp (Wkrs)	Carlisle, PA	08/01/94	07/21/94	30,156	Office Support for Kinney Shoe.
Hoechst Celanese (Co)	Somerville, NJ	08/01/94	07/12/94	30,157	Printing Plates & Chemicals.
Hampton Manufacturing (Wkrs)	Meadows of Dan, VA	08/01/94	07/14/94	30,158	Sportswear and Fleecewear.
Elco Corp (IBEW)	Huntingdon, PA	08/01/94	07/19/94	30,159	Moldings and Stampings.
Dynacraft (Wkrs)	Milpitas, CA	08/01/94	06/28/94	30,160	Lead Frames for Computer Chips.
D.P. Cajal's, Inc (Wkrs)	El Paso, TX	08/01/94	07/15/94	30,161	Denim Jeans, Skirts & Overalls.
Champion Products (Co)	Norwich, NY	08/01/94	07/22/94	30,162	Fleece Sweatsuits.
Bagcraft Corp of America (Wkrs)	Carteret, NJ	08/01/94	07/18/94	30,163	Paperbags.
American Press (The) (Wkrs)	Utica, NY	08/01/94	07/14/94	30,164	All Types of Printed Materials.
Wiedner Bros. Well Service (Wkrs).	Tioga, ND	08/01/94	07/13/94	30,165	Oil.
Vought Aircraft Co (UAW)	Dallas, TX	08/01/94	07/06/94	30,166	Aircraft Parts & Assem. (Sheet Metal).
Vought Aircraft Co (UAW)	Dallas, TX	08/01/94	07/13/94	30,167	Aircraft Parts & Assem. (Bond Shop).
J. Schoeneman (ACTWU)	Owings Mills, MD	08/01/94	07/15/94	30,168	Men's Suits, Coats & Slacks.
J. Schoeneman (ACTWU)	Wilmington, DE	08/01/94	07/15/94	30,169	Men's Suits, Coats and Slacks.
J. Schoeneman (ACTWU)	Chambersburg, PA	08/01/94	07/15/94	30,170	Men's Suits, Coats and Slacks.
Aileen, Inc (Wkrs)	New York, NY	08/01/94	07/15/94	30,171	Ladies' Sportswear.
Champion Products (Co)	Slocum, AL	08/01/94	07/22/94	30,172	Fleece Sweatsuits.

[FR Doc. 19850 Filed 8–12–94; 8:45 am]
BILLING CODE 4510–30–M

Determinations Regarding Eligibility To Apply for Worker Adjustment Assistance and NAFTA Transitional Adjustment Assistance

In accordance with section 223 of the Trade Act of 1974, as amended, the Department of Labor herein presents summaries of determinations regarding eligibility to apply for trade adjustment assistance for workers (TA–W) issued during the period of July, 1994.

In order for an affirmative determination to be made and a certification of eligibility to apply for worker adjustment assistance to be issued, each of the group eligibility requirements of Section 222 of the Act must be met.

(1) That a significant number or proportion of the workers in the workers' firm, or an appropriate subdivision thereof, have become totally or partially separated,

(2) That sales or production, or both, of the firm or subdivision have decreased absolutely, and

(3) That increases of imports of articles like or directly competitive with articles produced by the firm or appropriate subdivision have contributed importantly to the separations, or threat thereof, and to the absolute decline in sales or production.

Negative Determinations for Worker Adjustment Assistance

In each of the following cases the investigation revealed that criterion (3) has not been met. A survey of customers indicated that increased imports did not contribute importantly to worker separations at the firm.

TA–W–29,954; Andre Fashions, Passaic, NJ

TA–W–29,876; Posso Corp., Kerrville, TX

In the following cases, the investigation revealed that the criteria for eligibility have not been met for the reasons specified.

TA–W–29,723; British Gas Exploration & Production, Inc., Houston, TX

The workers' firm does not produce an article as required for certification under Section 222 of the Trade Act of 1974.

TA–W–29,899; Clayton Williams Energy, Inc., San Antonio, TX

Increased imports did not contribute importantly to worker separations at the firm.

TA–W–29,918; Sharp Electronics Corp., Mahawak, NJ

The workers' firm does not produce an article as required for certification under Section 222 of the Trade Act of 1974.

TA–W–29,998; Ruth Hornbein Sweaters, Inc., Brooklyn, NY

The investigation revealed that criterion (2) has not been met. Sales or production did not decline during the relevant period as required for certification.

TA–W–29,813; Maxus Aviation Co. of Maxus Energy Corp., Dallas, TX

The workers' firm does not produce an article as required for certification under Section 222 of the Trade Act of 1974.

TA–W–29,965; Benicia Industries, Inc., Benicia, CA

The workers' firm does not produce an article as required for certification under Section 222 of the Trade Act of 1974.

TA–W–29,963; McCord Winn Textron, Cookeville, TN

The investigation revealed that criterion (2) has not been met. Sales or production did not decline during the relevant period as required for certification.

TA–W–29,976; Nononsense Factory Outlet, Inc., Sevierville, TN

The workers' firm does not produce an article as required for certification under Section 222 of the Trade Act of 1974.

TA–W–29,763; General Electric Co., Aircraft Engine Div., Dynn, MA

U.S. imports of engines for aircraft thrust not exceeding 25 kilonewtons decreased absolutely in 1993 compared with 1992 and decreased in the latest 12 month period April through March 1993–1994 compared with the same period 1992–1993.

TA–W–29,764; Koch Gathering Systems, Inc., Trenton, ND

Increased imports did not contribute importantly to worker separations at the firm.

TA–W–29,808; Smith System Manufacturing Co., Princeton, MN

Increased imports did not contribute importantly to worker separations at the firm.

TA–W–29,815; Fisher-Price, Inc., Brownsville, TX

Increased imports did not contribute importantly to worker separations at the firm.

TA-W-29,740; Estacada Lumber Div., RSG Forest Products, Inc., Estacada, OR

Increased imports did not contribute importantly to worker separations at the firm.

TA-W-30,067; Washington Steel Corp., Storeroom Dept., Washington, PA

The workers' firm does not produce an article as required for certification under Section 222 of the Trade Act of 1974.

TA-W-29,722; Western Gatheirng Co., Austin, TX

The workers' firm does not produce an article as required for certification under Section 222 of the Trade Act of 1974.

TA-W-29,991; Gucci America, Inc., Seattle, WA

The workers' firm does not produce an article as required for certification under Section 222 of the Trade Act of 1974.

TA-W-30,104; Index, The Design Firm, Houston, TX

The workers' firm does not produce an article as required for certification under Section 222 of the Trade Act of 1974.

Affirmative Determinations for Worker Adjustment Assistance

TA-W-29,898; Commodore Semiconductor Group, Norristown, PA

A certification was issued covering all workers separated on or after May 9, 1993.

TA-W-30,008; Aircraft & Electronic Specialties, Inc., (DBA AES Interconnect), Indianapolis (Avon), IN

A certification was issued covering all workers separated on or after June 3, 1993.

TA-W-29,803; Adcor Nicklos Drilling Co, (Formerly Adcor Drilling Co.), Williston, ND

A certification was issued covering all workers separated on or after April 10, 1994.

TA-W-29,936; Beaver Operations, Inc., Chester/Lincoln, ME

A certification was issued covering all workers separated on or after April 25, 1993.

TA-W-29,914 & TA-W-29,914A; Valdese Textile, Inc, Valdese, NC & New York, NY

A certification was issued covering all workers separated on or after May 23, 1993.

TA-W-30,001; Jencraft Manufacturing Co., Inc., Elsa, TX

A certification was issued covering all workers separated on or after June 5, 1993.

W-29,941; Desoto, Inc., Stone Mountain, GA

A certification was issued covering all workers separated on or after June 23, 1993.

TA-W-30,077; Oxford of Dawson, Oxford Shiring Div., Dawson, GA

A certification was issued covering all workers separated on or after June 20, 1993.

TA-W-29,959; Spartan Undies/ Imerman, Inc., Spartanburg, SC

A certification was issued covering all workers separated on or after June 1, 1993.

TA-W-29,792; Allied Cementing Co., Inc., Russell, KS

A certification was issued covering all workers separated on or after January 27, 1993.

TA-W-29,937; Burlington Industries, Burlington Knitted Fabrics Div., Statesville, NC

TA-W-29,938; Burlington Industries, Inc., New York, NY

A certification was issued covering all workers separated on or after May 17, 1993.

Also, pursuant to Title V of the North American Free Trade Agreement Implementation Act (P.L. 103-182) concerning transitional adjustment assistance hereinafter called (NAFTA-TAA) and in accordance with Section 250(a) Subchapter D, Chapter 2, Title II, of the Trade Act as amended, the Department of Labor presents summaries of determinations regarding eligibility to apply for NAFTA-TAA issued during the month of July, 1994.

In order for an affirmative determination to be made and a certification of eligibility to apply for NAFTA-TAA the following group eligibility requirements of Section 250 of the Trade Act must be met:

(1) that a significant number or proportion of the workers in that workers' firm, or an appropriate subdivision thereof, (including workers in any agricultural firm or appropriate subdivision thereof) have become totally or partially separated from employment and either—

(A) That sales or production, or both, of such firm or subdivision have decreased absolutely,

(B) That imports from Mexico or Canada of articles like or directly competitive with articles produced by such firm or subdivision have increased.

(c) That the increase in imports contributed importantly to such workers' separations or threat of separation and to the decline in sales or production of such firm of subdivision; or

(2) That there has been a shift in production by such workers' firm or subdivision to Mexico or Canada of articles like or directly competitive with articles which are produced by the firm or subdivision.

Negative Determinations NAFTA-TAA

NAFTA-TAA-000156; Pyle-National, An Amphenol Co, Chicago, IL

The investigation revealed that criteria (3) & criteria (4) were not met. A Departmental survey was conducted with firms to whom the Pyle-National submitted bids but did not receive contracts revealed that the subject contracts were awarded to domestic firms for production in the United States.

NAFTA-TAA-00147; International Paper Container Div., Presque Isle, ME

The investigation revealed that criteria (3) & criterion (4) were not met. There was no shift in production workers' firm to Mexico or Canada. A survey of major domestic customers of the subject firm revealed that customers did not import corrugated containers during the relevant time period.

NAFTA-TAA-00160; Philips Lighting Co., Philips Electronics North American, Washington, PA

The investigation revealed that workers of the subject firm did not produce an article within the meaning of the Act. The Department of Labor has consistently determined that the performance of services does not constitute production of an article as required by the Trade Act of 1974.

NAFTA-TAA-00148; Champion Parts, Northeast Div., Beech Creek, PA and Lock Haven, PA

The investigation revealed that criteria (3) and (4) were not met. There was no shift in production from the workers' firm to Mexico or Canada. Layoffs at the subject plants in 1994 are due to a domestic consolidation of production by Champion Parts. The Lock Haven, PA plant is closing, & its production is being transferred to the Beech Creek PA plant. The Beech Creek plant's production is being shifted to a company plant in Hope, AR.

NAFTA-TAA-00149; Safeway, Inc., Walnut Creek, CA

The investigation revealed that the workers of the subject firm did not produce an article within the meaning of the Act. The Department of Labor has consistently determined that the performance of services did not constitute production of an article as required by the Trade Act of 1974.

NAFTA-TAA-00159; McClure Manufacturing, Inc., Ellijay, GA

The investigation revealed that criteria (3) and (4) were not met.

A survey of the manufacturer from whom McClure received contract work revealed that the manufacturer did not import ladies' jeans from Mexico or Canada. A survey conducted with customers of McClure's manufacturer revealed that respondents did not import ladies' jeans from Mexico or Canada. Furthermore, McClure Manufacturing did not shift its production from the subject plant to Mexico or Canada.

Affirmative Determinations NAFTA-TAA

None

I hereby certify that the aforementioned determinations were issued during the month of July, 1994. Copies of these determinations are available for inspection in Room C-4318, U.S. Department of Labor, 200 Constitution Avenue, N.W., Washington, D.C. 20210 during normal business hours or will be mailed to persons who write to the above address.

Dated: August 5, 1994.

Violet L. Thompson,

Deputy Director, Office of Trade Adjustment Assistance.

[FR Doc. 94-19849 Filed 8-12-94; 8:45 am]

BILLING CODE 4510-30-M

Investigations Regarding Certifications of Eligibility To Apply for Worker Adjustment Assistance

Petitions have been filed with the Secretary of Labor under Section 221(a) of the Trade Act of 1974 ("the Act") and are identified in the Appendix to this notice. Upon receipt of these petitions, the Director of the Office of Trade Adjustment Assistance, Employment and Training Administration, has instituted investigations pursuant to section 221(a) of the Act.

The purpose of each of the investigations is to determine whether the workers are eligible to apply for adjustment assistance under Title II, Chapter 2, of the Act. The investigations will further relate, as appropriate, to the determination of the date on which total or partial separations began or threatened to begin and the subdivision of the firm involved.

The petitioners or any other persons showing a substantial interest in the subject matter of the investigations may request a public hearing, provided such request is filed in writing with the Director, Office of Trade Adjustment Assistance, at the address shown below, not later than August 25, 1994.

Interestd persons are invited to submit written comments regarding the subject matter of the investigations to the Director, Office of Trade Adjustment Assistance, at the address shown below, not later than August 25, 1994.

The petitions filed in this case are available for inspection at the Office of the Director, Office of Trade Adjustment Assistance, Employment and Training Administration, U.S. Department of Labor, 200 Constitution Avenue, NW., Washington, DC 20210.

Signed at Washington, DC this 25th day of July, 1994.

Violet Thompson,

Deputy Director, Office of Trade Adjustment Assistance.

APPENDIX

Petitioner (union/workers/firm)	Location	Date received	Date of petition	Petition No.	Articles produced
F.C.I (Co)	Freeman, SD	07/25/94	07/19/94	30,124	Orthopedic Back Supports.
T.J. Apparel Designs, Inc (Wkrs)	Dallas, TX	07/25/94	07/14/94	30,125	Ladies' Sportswear.
FMC Corp (USWA)	Green Bay, WI	07/25/94	07/11/94	30,126	Bag Machinery.
RMI Titanium Co (USWA)	Niles, OH	07/25/94	07/14/94	30,127	Titanium.
GenCorp-Aerojet (Wkrs)	Azusa, CA	07/25/94	07/13/94	30,128	Electronic Systems.
Dietrich Industries, Inc (Wkrs)	Blairsville, PA	07/25/94	07/15/94	30,129	Steel Processing.
Cluett, Peabody & Co (Co)	Atlanta, GA	07/25/94	07/12/94	30,130	Men's Dress & Sport Shirs, etc.
Coltec Industries, Inc (Wkrs)	Burbank, CA	07/25/94	05/31/94	30,131	Overhauled & Repair Landing Gears.
VECO Drilling, Inc (Co)	Denver, CO	07/25/94	06/21/94	30,132	Oil and Gas.
Tunnelton Mining Co (UMWA)	Uniontown, PA	07/25/94	07/12/94	30,133	Steam Coal.
Sea Farm Washington, Inc (Wkrs)	Port Angeles, WA	07/25/94	07/25/94	30,134	Administration.
R.O.M. Apparel, Inc (Wkrs)	Brooklyn, NY	07/25/94	07/11/94	30,135	Ladies' Jackets.
Roeder Hydraulics (Wkrs)	Odessa, TX	07/25/94	07/05/94	30,136	Down Hole Hydraulic Oil Pumps.
Diamond Tool & Horseshoe Co (Wkrs).	Duluth, MN	07/25/94	04/14/94	30,137	Horse and Mule Shoes.
Carthage Shirt Co (Wkrs)	Carthage, TN	07/25/94	07/10/94	30,138	Mens' Shirts & Ladies Blouses.
Baxter Healthcare Corp (Co)	Niles, IL	07/25/94	06/23/94	30,139	Surgical Instruments.
A.F. Industries (Wkrs)	Great Falls, SC	07/25/94	07/12/94	30,140	Window Drapes.
Julius Simon Ruffolo, Inc (ACTWU).	Belton, SC	07/25/94	07/12/94	30,141	Men's Dress & Sports Shirts.
Oliver Products Co (Wkrs)	Grand Rapids, MI	07/25/94	07/11/94	30,142	Medical Packaging Materials.
Cluett, Peabody & Co., Inc. (Wkrs).	Albertville, AL	07/25/94	07/12/94	30,143	Men's Dress & Sport Shirt, etc.
Cluett, Peabody & Co., Inc. (Wkrs).	Cedartown, GA	07/25/94	07/12/94	30,144	Men's Dress & Sport Shirt, etc.
Cluett, Peabody, & Co., Inc. (Wkrs).	Enterprise, AL	07/25/94	07/12/94	30,145	Men's Dress & Sport Shirt, etc.
Cluett, Peabody & Co., Inc. (Wkrs).	Austell, GA	07/25/94	07/12/94	30,146	Men's Dress & Sport Shirt, etc.

[FR Doc. 94–19852 Filed 8–12–94; 8:45 am]
BILLING CODE 4510–30–M

[NAFTA–00111]

Elf Atochem North America, Inc. Industrial Chemicals Division, Tacoma, WA; Affirmative Determination Regarding Application for Reconsideration

On June 27, 1994, Region 9 of the International Chemical Workers Union (ICWU) requested administrative reconsideration of the Department of Labor's Notice of Negative Determination Regarding Eligibility to Apply for NAFTA-Transitional Adjustment Assistance for workers at the subject firm. The Department's Negative Determination was issued on June 20, 1994 and was published in the **Federal Register** on June 30, 1994 (59 FR 33788).

The union claims that one of Elf Atochem's major customers is relying on products which are currently being imported from Canada.

Conclusion

After careful review of the application, I conclude that the claim is of sufficient weight to justify reconsideration of the Department of Labor's prior decision. The application is, therefore, granted.

Signed at Washington, DC., this 25th day of July 1994.

Stephen A. Wandner,

Deputy Director, Office of Legislation & Actuarial Services, Unemployment Insurance Service.

[FR Doc. 94–19851 Filed 8–12–94; 8:45 am]
BILLING CODE 4510–30–M

[TA–W–29,742]

Sunnyside Coal Company, Sunnyside, UT; Notice of Affirmative Determination Regarding Application for Reconsideration

On July 19, 1994, District 22 of the United Mine Workers of America (UMW) requested reconsideration of the Department of Labor's Notice of Negative Determination Regarding Eligibility to Apply for Worker Adjustment Assistance for workers at the subject firm. The Department's Negative Determination was issued on June 23, 1994 and was published in the **Federal Register** on July 19, 1994 (59 CFR 36792).

The union claims that a major customer of the subject firm increased its imports during the relevant period.

Conclusion

After careful review of the application, I conclude that the claim is of sufficient weight to justify reconsideration of the Department of Labor's prior decision. The application is, therefore, granted.

Signed at Washington, DC, this 25th day of July 1994.

Stephen A. Wandner,

Deputy Director, Office of Legislation & Actuarial Services, Unemployment Insurance Service.

[FR Doc. 94–19848 Filed 8–12–94; 8:45 am]
BILLING CODE 4510–30–M

NATIONAL AERONAUTICS AND SPACE ADMINISTRATION

[Notice 94–052]

Government-Owned Inventions Available for Licensing

AGENCY: National Aeronautics and Space Administration.

ACTION: Notice of Availability of Inventions for Licensing.

SUMMARY: The inventions listed below are owned by the U.S. Government and are available for domestic, and possibly foreign, licensing.

Copies of patent applications cited are available from the National Technical Information Service, Springfield, VA 22161. Request for copies of patent applications must include the patent application serial number. Claims are deleted from the patent applications sold to avoid premature disclosure.

DATES: August 15, 1994.

FOR FURTHER INFORMATION CONTACT: National Aeronautics and Space Administration, Harry Lupuloff, Director of Patent Licensing, Code GP, Washington, DC 20546, Telephone (202) 358–2041, fax (202) 358–4341.

Patent Application 07/550,775: Pipeline Synthetic Aperture Radar Data Compression Utilizing Systolic Binary Tree-Searched Architecture; filed July 10, 1990.

Patent Application 07/552,670: Passive Fetal Monitoring Sensor; filed July 16, 1990.

Patent Application 07/555,865: Detection of Multiple-Bit Errors from Single-Inn Tracks in Integrated Circuits; filed July 23, 1990.

Patent Application 07/555,864: Method and Apparatus for Characterizing Residual Stress in Ferromagnetic Material; filed July 25, 1990.

Patent Application 07/560,717: Novel Polyimide Molding Powder Coating Adhesive and Matrix Resin; filed July 31, 1990.

Patent Application 07/580,923: Natural Flow Wing; filed July 31, 1990.

Patent Application 07/560,926: Composite Thermal Barrier Coating; filed July 31, 1990.

Patent Application 07/560,924: Optical Joint Correlator for Real-Time Image Tracking; filed July 31, 1990.

Patent Application 07/000,000: Flexible Thermal Apparatus for Mounting of Thermoelectric Cooler; filed July 31, 1990.

Patent Application 07/560,691: Multiple Symbol Differential Detection; filed July 31, 1990.

Dated: August 3, 1994.

Edward A. Frankle,

General Counsel.

[FR Doc. 94–19874 Filed 8–12–94; 8:45 am]
BILLING CODE 7510–01–M

[Notice 94–053]

Government-Owned Inventions Available for Licensing

AGENCY: National Aeronautics and Space Administration.

ACTION: Notice of Availability of Inventions for Licensing.

SUMMARY: The inventions listed below are owned by the U.S. Government and are available for domestic, and possibly foreign, licensing.

Copies of patent applications cited are available from the National Technical Information Service, Springfield, VA 22161. Request for copies of patent applications must include the patent application serial number. Claims are deleted from the patent applications sold to avoid premature disclosure.

DATE: August 15, 1994.

FOR FURTHER INFORMATION CONTACT: National Aeronautics and Space Administration, Harry Lupuloff, Director of Patent Licensing, Code GP, Washington, DC 20546, Telephone (202) 358–2041, fax (202) 358–4341.

Patent Application 07/562,176: Long Ware Length Infrared Detector; filed August 3, 1990.

Patent Application 07/565,090: Rotatable Non-Circular Forebody Flow Controller; filed August 10, 1990.

Patent Application 07/567,025: Polymer/Rivet Combination for Hydrodynamic Skin Friction Reduction; filed August 14, 1990.

Patent Application 07/568,128: Preparation of Polyimides from Bis(N-Isoprenyl)s of Aryl Diamines; filed August 16, 1990.

Patent Application 07/568,127: Measurement of Waves in Flows Across a Surface; filed August 16, 1990.

Patent Application 07/568,129: Motion Detection, Novelty Filtering, and Target Using an Interferometric Technique with a Gas Conjugate Mirror; filed August 16, 1990.

Patent Application 07/568,130: Thermal Power Transfer System Using Applied Potential Difference to Sustain Operating Pressure Difference; filed August 16, 1990.

Patent Application 07/571,344: Control System for Ruling Blazed, Aberration Corrected Diffraction Gratings; filed August 23, 1990.

Patent Application 07/571,060: Active Antenna; filed August 23, 1990.

Patent Application 07/571,058: Method of Making Carbide/Fluoride Silver Composites; filed August 23, 1990.

Patent Application 07/571,059: Method of Making Single Crystal Fibers; filed August 23, 1990.

Patent Application 07/571,062: Probe Insertion Apparatus with Inflatable Seal; filed August 23, 1990.

Patent Application 07/571,087: Method and Apparatus for Determining Return Stroke Polarity of Distant Lighting; filed August 23, 1990.

Patent Application 07/575,694: Method of Fabricating Germanium and Gallium Arsenide Devices; filed August 31, 1990.

Patent Application 07/575,737: Integrated Launch and Emergency Vehicle System; filed August 31, 1990.

Patent Application 07/575,738: Imide/Arylene Ether Copolymers; filed August 31, 1990.

Patent Application 07/575,695: Water Cooled Static Pressure Probe; filed August 31, 1990.

Patent Application 07/575,708: Hanging Drop Crystals; filed August 31, 1990.

Patent Application 07/575,736: Macromolecular Crystal Growing System; filed August 31, 1990.

Patent Application 07/575,697: Composite Passive Damping Struts for Large Precision Structures; filed August 31, 1990.

Dated: August 3, 1994.

Edward A. Frankle,

General Counsel.

[FR Doc. 94–19875 Filed 8–12–94; 8:45 am]

BILLING CODE 7510–01–M

[Notice 94–054]

Government-Owned Inventions Available for Licensing

AGENCY: National Aeronautics and Space Administration.

ACTION: Notice of Availability of Inventions for Licensing.

SUMMARY: The inventions listed below are owned by the U.S. Government and are available for domestic, and possibly foreign, licensing.

Copies of patent applications cited are available from the National Technical Information Service, Springfield, VA 22161. Request for copies of patent applications must include the patent application serial number. Claims are deleted from the patent application sold to avoid premature disclosure.

DATE: August 15, 1994.

FOR FURTHER INFORMATION CONTACT: National Aeronautics and Space Administration, Harry Lupuloff, Director of Patent Licensing, Code GP, Washington, DC 20546, Telephone (202) 358–2041, fax (202) 358–4341.

Patent Application 07/578,043: Method of Fabricating Composite Structures; filed September 15, 1990.

Patent Application 07/584,018: Dual Gage Balance System for Measuring Light Loads; filed September 18, 1990.

Patent Application 07/586,369: High Temperature Fiber Optic Microphone; filed September 21, 1990.

Patent Application 07/587,880: Transducer Holder and Method of Making; filed September 25, 1990.

Patent Application 07/587,920: Lamina Transducer Coupler and Method of Making; filed September 25, 1990.

Patent Application 07/587,921: Monolithic MM-Wave Phase Shifter Using Optically Activated Superconducting Switches; filed September 25, 1990.

Patent Application 07/587,890: Metal Etching Composition; filed September 25, 1990.

Patent Application 07/587,922: General Method of Pattern Classification Using the Two Domain Theory; filed September 25, 1990.

Patent Application 07/589,571: Methyl Substituted Polyimides Containing Carbonyl and Ether Connecting Groups; filed September 28, 1990.

Dated: August 3, 1994.

Edward A. Frankle,

General Counsel.

[FR Doc. 94–19876 Filed 8–12–94; 8:45 am]

BILLING CODE 7510–01–M

[Notice 94–055]

Government-Owned Inventions Available for Licensing

AGENCY: National Aeronautics and Space Administration.

ACTION: Notice of Availability of Inventions for Licensing.

SUMMARY: The inventions listed below are owned by the U.S. Government and are available for domestic, and possibly foreign, licensing.

Copies of patent applications cited are available from the National Technical Information Service, Springfield, VA 22161. Requests for copies of patent applications must include the patent application serial number. Claims are deleted from the patent applications sold to avoid premature disclosure.

DATE: August 15, 1994.

FOR FURTHER INFORMATION CONTACT: National Aeronautics and Space Administration, Harry Lupuloff, Director of Patent Licensing, Code GP, Washington, DC 20546, Telephone (202) 358–2041, fax (202) 358–4341.

Patent Application 07/591,645: Permanent Wire Splicing by an Explosive Joining Process; filed October 2, 1990.

Patent Application 07/591,644: Apparatus and Method for Explosive Bonding to Edge of Flyer Plate; filed October 2, 1990.

Patent Application 07/591,643: Digital Data Registration and Differencing Compression System; filed October 2, 1990.

Patent Application 07/593,412: Ignitability Test Method and Apparatus; filed October 4, 1990.

Patent Application 07/596,139: Secondary Li Battery Incorporating 12-Crown- & Ether; filed October 11, 1990.

Patent Application 07/599,601: Controlled Methods of Reducing Electrophoretic Mobility of Particles, Cells, and the Like; filed October 18, 1990.

Patent Application 07/601,957: Metallic Seal for Thermal Barrier Coating Systems; filed October 23, 1990.

Patent Application 07/603,335: Selectable Towline Spin Chute System; filed October 25, 1990.

Patent Application 07/603,055: Vinyl Capped Addition Polyimides; filed October 25, 1990.

Patent Application 07/603,052: Dual Diaphragm Tank With Telltale Drain; filed October 25, 1990.

Patent Application 07/603,337: Two Fault Tolerant Toggle-Hook Release; filed October 25, 1990.

Patent Application 07/596,105: Laser Velocumeter Foe Near Surface Measurements; filed October 31, 1990.

Patent Application 07/606,988: Water Window Imaging X-ray Microscope; filed October 31, 1990.

Patent Application 07/596,133: High Gain ALGaAS/CaAs Double Heterojunction Darlington Phototransistors for Optical Neural Networks; filed October 31, 1990.

Dated: August 3, 1994.

Edward A. Frankle,

General Counsel.

[FR Doc. 94–19878 Filed 8–12–94; 8:45 am]

BILLING CODE 7510–01–M

[Notice 94–056]

Government-Owned Inventions Available for Licensing

AGENCY: National Aeronautics and Space Administration.

ACTION: Notice of Availability of Inventions for Licensing.

SUMMARY: The inventions listed below are owned by the U.S. Government and are available for domestic, and possibly foreign, licensing.

Copies of patent applications cited are available from the National Technical Information Service, Springfield, VA 22161. Request for copies of patent applications must include the patent application serial number. Claims are deleted from the patent applications sold to avoid premature disclosure.

DATES: August 15, 1994.

FOR FURTHER INFORMATION CONTACT: National Aeronautics and Space Administration, Harry Lupuloff, Director of Patent Licensing, Code GP, Washington, DC 20546, Telephone (202) 358–2041, fax (202) 358–4341.

Patient Application 07/608,657: Robotic Tool Change Mechanism; filed November 2, 1990.

Patent Application 07/608,494: Passive Laminar Flow Control of Crossflow Vorticity; filed November 2, 1990.

Patent Application 07/608,493: Method of Intercollating Large Quantities of Fibrous Structures; filed November 2, 1990.

Patent Application 07/608,452: Stereosocipic Camera and Viewing System with Undistorted Depth Presentation Reduced or; filed November 2, 1990.

Patent Application 07/611,214: Real-Time Data Compression of Broadcast Video Signals; filed November 9, 1990.

Patent Application 07/610,883: Method of Making Contamination-Free Ceramic Bodies; filed November 9, 1990.

Patent Application 07/610,879: High Temperature, Flexible, Fiber-Preform Seal; filed November 9, 1990.

Patent Application 07/613,188: Cryogenic Shutter; filed November 15, 1990.

Patent Application 07/613,046: Continuous Fiber Thermoplastic Prepreg; filed November 15, 1990.

Patent Application 07/615,733: Non-Contacting Velocity Measurement System; filed November 19, 1990.

Patent Application 07/615,668: Obstacle Avoidance for Redundant Robots Using Configuration Control; filed November 19, 1990.

Patent Application 07/617,316: Insoluble Low Dielectric Polyimides; filed November 23, 1990.

Patent Application 07/617,752: High Temperature Flexible Pressure Actuated Brush Seal; filed November 25, 1990.

Patent Application 07/618,854: Improved Sprayable Lightweight Ablative Coating; filed November 28, 1990.

Dated: August 3, 1994.

Edward A. Frankle,

General Counsel.

[FR Doc. 94–19879 Filed 8–12–94; 8:45 am]

BILLING CODE 7510–01–M

NATIONAL SCIENCE FOUNDATION

Special Emphasis Panel in Geosciences; Notice of Meeting

In accordance with the Federal Advisory Committee Act (Pub. L. 92–463, as amended), the National Science Foundation announces the following meeting.

Name: Special Emphasis Panel In Geosciences

Date and Time: August 31, 1994; 8: 30 AM to 5: 00 PM

Place: Room 118, St. James Hotel, 950 24th St. NW., Washington, DC 20037

Type of Meeting: Closed

Contact Person: Dr. Joan R. Mitchell, OCE Room 725, National Science Foundation, 4201 Wilson Blvd., Arlington, VA 22230. Telephone: (703) 306–1580.

Purpose of Meeting: To provide advice and recommendations concerning proposals submitted to NSF for financial support.

Agenda: To review and evaluate Marine/Estuarine Aquaculture SBIR proposals as part of the selection process for awards.

Reason for Closing: The proposals being reviewed include information of a proprietary or confidential nature, including technical information, financial data, such as salaries; and personal information concerning individuals associated with the proposals. These matters are exempt under 5 U.S.C. 552b(c), (4) and (6) of the Government in the Sunshine Act.

Dated: August 10, 1994.

M. Rebecca Winkler,

Committee Management Officer.

[FR Doc. 94–19917 Filed 8–12–94; 8: 45 am]

BILLING CODE 7555–01–M

NUCLEAR REGULATORY COMMISSION

[Docket No. 72–11 (50–312)]

Sacramento Municipal Utility District Notice of Issuance of Environmental Assessment and Finding of No Significant Impact for the Independent Spent Fuel Storage Installation at the Rancho Seco Nuclear Generaling Station

The U.S. Nuclear Regulatory Commission (the Commission) is considering issuance of a materials license under the requirements of *Title 10 of the Code of Federal Regulations,* Part 72 (10 CFR Part 72), to Sacramento Municipal Utility District (SMUD or the Applicant), authorizing receipt and storage of spent fuel in an independent spent fuel storage installation (ISFSI) located onsite at its Rancho Seco Nuclear Generating Station (RSNGS) near Sacramento California. The Commission's Office of Nuclear Material Safety and Safeguards, Division of Industrial and Medical Nuclear Safety, has completed its environmental review in support of the issuance of a materials license. The "Environmental Assessment (EA) Related to the Construction and Operation of the Rancho Seco Nuclear Generating Station Independent Spent Fuel Storage Installation" have been issued in accordance with 10 CFR Part 51.

Description of the Proposed Action

The proposed licensing action would authorize the applicant to construct and operate a dry storage ISFSI. The function of the ISFSI is to provide interim storage of 493 spent fuel assemblies which were irradiated a Rancho Seco during its operation and are currently stored in the spent fuel pool. Twenty-four fuel assemblies are stored in an inert atmosphere inside each stainless steel canister which provides confinement, shielding, criticality control, and heat removal. Spent fuel loading and canister preparation take place within the RSNGS fuel handling building. The canister is then moved to the onsite ISFSI inside a 10 CFR Part 71 certified shipping cask where the canister is then placed inside a module (HSM), which provides additional shielding. The license for an ISFSI under 10 CFR Part 72 is issued for 20 years, but the licensee may apply to the commission to renew the license, if necessary, prior to its expiration.

Need for the Proposed Action

Rancho Seco Nuclear Generating Station has ceased operation as the

result of a public referendum of SMUD voters on June 6, 1989. The reactor has been permanently defueled. The spent nuclear fuel will be stored at an ISFSI, in a transportable storage system. SMUD plans to discontinue use of the Ranch Seco spent fuel pool as it proceeds to place Rancho Seco in the Hardened-SAFSTOR phase of decommissioning. The applicant intends to operate the Rancho Seco ISFSI until acceptance of the spent nuclear fuel by Department of Energy (DOE), which is responsible for its permanent disposal.

Environmental Impacts of the Proposed Action

Construction of the ISFSI will affect approximately .8 ha (2 acres) of the 1003 ha (2480 acre) Rancho Seco Nuclear Generating Station site area. The potential for fugitive dust, erosion and noise impacts, typical of the planned construction activities, can be controlled to insignificant levels with good construction practices. The only resources committed irretrievably are the concrete and other construction materials used in the 21 ISFSI HSM's and the foundation pad. The radiological impacts from liquid and gaseous effluents arising from cask loading and preparation fall within the scope of impacts evaluated for licensed reactor operations and have been found to be acceptable. There impacts controlled by the existing RSNGS Reactor Technical Specifications. The primary exposure pathway associated with the ISFSI operation is direct irradiation of nearby residents and site workers. The dose commitment to the nearest resident is less than 1 mrem/yr and when added to that from RSNGS operations is well within the 250 μSv/yr (25 mrem/yr) requirement of 10 CFR 72.104. The collective dose commitment to residents within two miles of the ISFSI is .00078 person-Sv (.0078 person-mrem/yr). Table 9.4 of NCRP Report No. 94 [Ref. 11] shows the means exposure to an individual living in the United States from the natural background radiation to be about 3mSv/yr (300 mrem/yr). Compared to the natural background dose, the potential contribution of the ISFSI is only a small fraction of the total exposure a member of the general public will receive. As shown in [REF.1 Table 7.3] the occupational dose to site workers due to construction and operations is conservatively estimated at 14 person-mSv (1400 Person-mrem). This figure is a small fraction of the total occupational dose commitment at the RSNGS. As shown in the Environmental Assessment the radiological impacts due to accidents at the RSNGS ISFSI were conservatively estimated at 1.29 mSv (0.129 rem) which is only a small fraction of the 5 rem criteria specified in 10 CFR 72.106(b) and by the U.S. Environmental Protection Agency's protective action guides. Therefore, no significant non-radiological impacts are expected from ISFSI operations.

Generic Determination

The Commission has made the certain generic determinations set forth in 10 CFR 51.23(a) that spent fuel can be safely stored, without significant environmental impacts, for at least 30 years beyond the licensed life for operation of the reactor, at an onsite ISFSI, and that at least one permanent disposal facility will be available within the first quarter of the 21st century. Accordingly as set forth in 10 CFR Part 51(b), no discussion is required on any environmental impact of spent fuel storage in an onsite ISFSI for the period following the term of the initial ISFSI license.

Alternatives to the Proposed Action

The "Final Generic Environmental Impact Statement (FGEIS) on Handling and Storage of Spent Light Water Power Reactor Fuel," NUREG–0575, found that ISFSIs represent a major means of interim storage at a reactor site. While the environmental impacts of the dry storage ISFSI option were not specifically addressed in the FGEIS (storage of light-water-cooled power reactor spent fuel in a water pool was specifically addressed), the use of alternative dry passive storage techniques for aged fuel appeared to be equally feasible and environmentally acceptable, although environmental impacts need to be considered on a site-specific basis. Because of uncertainties in the timing of fuel acceptance for Federal storage and disposal under the Nuclear Waste Policy Act, most utilities are expected to face spent fuel storage shortfalls and are expected to be unwilling to reduce their own storage capacity in order to provide spent fuel storage for SMUD.

Several alternatives were discussed in the EA, but none were more protective of the environment or sufficiently met the spent fuel storage requirements for the RSNGS. Because the Commission has concluded there are no significant environmental impacts associated with the proposed action, any alternative of equal or greater environmental impact need not be evaluated.

Alternative Use of Resources

The only resources committed irretrievably and not previously considered in environmental documents relating to the RSNGS are the steel, concrete, and other construction materials used in the foundation, canisters, and modules.

Agenceis and Persons Contacted

No outside agencies were contacted in developing this assessment.

Finding of No Significant Impact

In summary, the ISFSI is located in a small area within the confines of the RSNGS owner-controlled area and will require only a minor commitment of land resources. The proposed action will cause no release of effluents, and there will be no significant increases in individual and collective radiation doses to either the public or onsite workers. Potential offsite impacts from a postulated worst-case credible accident are a small fraction of the regulatory limits of 10 CFR 72.106, and are well below the U.S. Environmental Protection Agency's Protective Action Guides. Therefore, the proposed action will not significantly affect the quality of the human environment. Accordingly, pursuant to the requirements of 10 CFR 51.31 and 10 CFR 51.32, the Commission has determined that a finding of no significant impact is appropriate and that an environmental impact statement (EIS) need not be prepared for the issuance of a materials license for the RSNGS ISFSI.

The EA for the proposed action, on which this Finding of No Significant Impact is based, relied upon several other environmental documents, with independent assessment of data, analyses, and results. The following documents were utilized:

1. Sacramento Municipal Utility District, "Rancho Seco Independent Spent Fuel Storage Installation License Application and Safety Analysis Report," Docket No. 72–11, October 1991.
2. Sacramento Municipal Utility District, "Rancho Seco Independent Spent Fuel Storage Installation Environmental Report, Revision 1," Docket No. 72–11, June 1993.
3. Pacific Nuclear Fuel Services (now VECTRA), "Safety Analysis Report for the Standardized NUHOMS Horizontal Modular Storage System for Irradiated Nuclear Fuel," Revision 2, May 1992.
4. U.S. Nuclear Regulatory Commission, "Final Generic Environmental Impact Statement on Handling and Storage of Spent Light Water Power Reactor Fuel," NUREG–0575, August 1979.
5. Sacramento Municipal Utility District, "Response to Request for Additional Information Regarding the Rancho Seco Independent Spent Fuel Storage Installation Environmental Report," June 1992.

6. Sacramento Municipal Utility District, "Response to Request for Additional Information Regarding Revision 1 to the Rancho Seco Independent Spent Fuel Storage Installation Environmental Report," December 1993.
7. Sacramento Municipal Utility District, "Final Environmental Statement Related to the Operation of Ranch Seco Nuclear Generating Station Unit 1," Docket No. 50–312, March 1973.
8. Sacramento Municipal Utility District, "Rancho Seco Facility Defueled Safety Analysis Report," Docket Number 50–312, September 1992.
9. Sacramento Municipal Utility District, "Rancho Seco Nuclear Generating Station-Updated Safety Analysis Report," Docket Number 50–312.
10. American National Standards Institute/American Nuclear Society, "Design Criteria for an Independent Spent Fuel Storage Installation (Dry Storage Type)," ANSI/ANS–57.9, 1984.
11. National Council on Radiation Protection (NCRP) Report Number 94, Exposure of the Population of the United States and Canada from Natural Background Radiation, issued December 30, 1987.

The EA and other documents related to this proposed action are available for public inspection, and for copying for a fee, at the NRC Public Document Room, the Gelman Building, 2120 L Street, NW., Washington, DC, and at the Local Public Document Room located at the Central Library, Government Documents, 828 I Street, Sacramento, California 95814.

Dated at Rockville, Maryland, this 5th day of August, 1994.

For the Nuclear Regulatory Commission.

Charles J. Haughney,

Chief, Storage and Transport Systems Branch, Division of Industrial and Medical Nuclear Safety, Office of Nuclear Material Safety and Safeguards.

[FR Doc. 94–19902 Filed 8–12–94; 8:45 am]

BILLING CODE 7590–01–M

[Docket No. 50–395]

South Carolina Electric & Gas Co., South Carolina Public Service Authority, Virgil C. Summer Nuclear Station, Unit No. 1; Environmental Assessment and Finding of No Significant Impact

The U.S. Nuclear Regulatory Commission (the Commission) is considering issuance of an amendment to Facility Operating License No. NPF–12 issued to South Carolina Electric & Gas Company (the licensee) for operation of the Virgil C. Summer Nuclear Station, Unit No. 1, located in Fairfield County, South Carolina.

Environmental Assessment

Identification of Proposed Action

The proposed amendment would include provisions in Technical Specifications (TS) ¾.9.12, Spent Fuel Assembly Storage; 5.3, Reactor Core; and 5.6, Fuel Storage; that would allow for the use and subsequent storage of fuel with an initial enrichment to 5.0 weight percent (w/o) Uranium–235 (U–235) and with a final burnup of up to 48,000 megawatt days per metric ton uranium (MWD/MTU). The proposed action is in accordance with the licensee's application for amendment dated December 13, 1993, as supplemented February 2, 1994, and March 11, 1994.

The Need for the Proposed Action

The proposed changes are needed so that the licensee can use higher fuel enrichment and extended irradiation to allow for longer fuel cycles.

Environmental Impacts of the Proposed Action

The Commission has completed its evaluation of the proposed revisions to the TS. The proposed revisions would permit use of fuel enriched to a nominal 5.0 w/o U–235. The safety considerations associated with reactor operation with higher enrichment and extended irradiation have been evaluated by the staff. The staff has concluded that such changes would not adversely affect plant safety. The proposed changes have no adverse effect on the probability of any accident. The higher enrichment with fuel burnup to 48000 MWD/MTU may slightly change the mix of fission products that might be released in the event of a serious accident but such small changes would not significantly affect the consequences of serious accidents. No changes are being made in the types or amounts of any radiological effluent that may be released off site. There is no significant increase in the allowable individual or cumulative occupational radiation exposure.

With regard to potential non-radiological impacts of reactor operation with higher enrichment and extended irradiation, the proposed changes to the TS involve systems located within the restricted area as defined in 10 CFR Part 20. They do not affect non-radiological plant effluent and have no other environmental impact.

The potential environmental impacts of transportation of more highly enriched and more highly irradiated fuel were published and discussed in the staff assessment entitled "NRC Assessment of the Environmental Effects of Transportation Resulting from Extended Fuel Enrichment and Irradiation," dated July 7, 1988, and published in the **Federal Register** on August 11, 1988 (53 FR 30355) in connection with the Shearon Harris Nuclear Power Plant, Unit 1, Environmental Assessment and Finding of No Significant Impact. As indicated therein, the environmental cost contribution of the proposed increase in the fuel enrichment and irradiation limits is either unchanged or less than that given in Table S–4 of 10 CFR 51.52(c). These findings are applicable to this amendment for Virgil C. Summer Nuclear Station, Unit No. 1. The Commission has concluded, therefore, that there are no significant radiological or nonradiological environmental impacts associated with the proposed amendment.

Alternative to the Proposed Action

Since the Commission has concluded that there are no significant environmental effects from the proposed action, any other alternative would have equal or greater environmental impacts and need not be evaluated.

The principal alternative would be to deny the requested amendment. This would not reduce the environmental impact of plant operation and would result in reduced operational flexibility.

Alternative Use of Resources

This action does not involve the use of any resources not previously considered in the Final Environmental Statement related to operation of the Virgil C. Summer Nuclear Station, Unit No. 1.

Agencies and Persons Consulted

The NRC staff reviewed the licensee's request and did not consult other agencies or persons.

Finding of No Significant Impact

The Commission has determined not to prepare an environmental impact statement for the proposed amendment. Based on the foregoing environmental assessment, we conclude that the proposed action will not have a significant effect on the quality of the human environment.

For further details on this action, see the application for amendment dated December 13, 1993, as supplemented February 2, 1994, and March 11, 1994, which are available for public inspection at the Commission's Public Document Room, 2120 L Street, N.W., Washington, D.C. and at the Fairfield County Library, Garden & Washington Streets, Winnsboro, S.C., 29180.

Dated at Rockville, Maryland, this 9th day of August, 1994.

For the Nuclear Regulatory Commission.

Patrick D. Milano,

Acting Director, Project Directorate II-1, Division of Reactor Projects—I/II, Office of Nuclear Reactor Regulations.

[FR Doc. 94-19899 Filed 8-12-94; 8:45 am]

BILLING CODE 7590-01-M

[Docket Nos. 50-445 and 50-446]

TU Electric Co., Comanche Peak Steam Electric Station, Units 1 and 2; Environmental Assessment and Finding of No Significant Impact

The U.S. Nuclear Regulatory Commission (the Commission) is considering issuance of amendments to Facility Operating License Nos. NPF-87 and NPF-89, issued to Texas Utilities Electric Company, et al., (the licensee) for the Comanche Peak Steam Electric Station (CPSES), Units 1 and 2 located in Somervell County, Texas.

Environmental Assessment

Identification of Proposed Action:

By letter dated April 22, 1994, the licensee proposed to change the technical specifications (TS) to allow an increase in fuel enrichment (Uranium-235) to 5.0 weight percent. The present TS permit a maximum enrichment of 4.3 weight percent.

The Need for Proposed Action:

The licensee intends, in the future, to use the more highly enriched fuel to operate with 18-month fuel cycles. Currently, TS 5.3.1 limits the storage and use of fuel to an enrichment of 4.3 weight percent. Thus, the change to the TS was requested.

Environmental Impact of the Proposed Action:

The Commission has completed its evaluation of the proposed revision to TS and concludes that storage and use of fuel enriched with U-235 up to 5.0 weight percent at the CPSES, Units 1 and 2, is acceptable. The safety considerations associated with higher enrichments have been evaluated by the NRC staff and the staff has concluded that such changes would not adversely affect plant safety. The proposed changes have no adverse effect on the probability of any accident. There will be no change to authorized power level. There is no change to the allowable fuel burnup (60,000 MWD/MTU) already approved for CPSES, Units 1 and 2. As a result, there is no significant increase in individual or cumulative radiation exposure.

The environmental impacts of transportation resulting from the use of higher enrichment and extended irradiation are discussed in the staff assessment entitled, "NRC Assessment of the Environmental Effects of Transportation Resulting from Extended Fuel Enrichment and Irradiation." This assessment was published in the **Federal Register** on August 11, 1988, (53 FR 30355) as corrected on August 24, 1988, (53 FR 32322) in connection with the Shearon Harris Nuclear Power Plant, Unit 1: Environmental Assessment and Finding of No Significant Impact. As indicated therein, the environmental cost contribution of an increase in fuel enrichment of up to 5.0 weight percent U-235 and irradiation limits of up to 60,000 MWD/MTU are either unchanged, or may in fact be reduced from those summarized in Table S-4 as set forth in 10 CFR 51.52(c). These findings are applicable to the proposed amendments for CPSES, Units 1 and 2. Accordingly, the Commission concludes that this proposed action would result in no significant radiological environmental impact.

With regard to potential non-radiological impacts, the proposed changes involve systems located within the restricted area as defined in 10 CFR Part 20. It does not affect non-radiological plant effluents and has no other environmental impact. Therefore, the Commission concludes that there are no significant non-radiological environmental impacts associated with the proposed amendments.

Alternative to the Proposed Action:

Since the Commission concluded that there are no significant environmental effects that would result from the proposed action, any alternative with equal or greater environmental impacts need not be evaluated.

The principal alternative would be to deny the requested amendments. The staff considered denial of the proposed action; however, this would not reduce environmental impact of plant operation and would result in reduced operational flexibility. The environmental impacts of the proposed action and the alternative action are similar.

Alternative Use of Resources:

This action does not involve the use of any resources not previously considered in the Final Environmental Statement for the CPSES, Units 1 and 2, dated September 1981 (NUREG 0775) and Supplement dated October 1989.

Agencies and Persons Consulted:

The NRC staff reviewed the licensee's request. The staff consulted with the State of Texas regarding the environmental impact of the proposed action.

Finding of No Significant Impact:

The Commission has determined not to prepare an environmental impact statement for the proposed license amendments.

Based upon the foregoing environmental assessment, we conclude that the proposed action will not have a significant effect on the quality of the human environment.

For further details with respect to this action, see the application for license amendments dated April 22, 1994. Copies are available for public inspection at the Commission's Public Document Room, the Gelman Building, 2120 L Street, NW., Washington, DC 20555, and at the Local Public Document Room located at the University of Texas at the Arlington Library, Government Publications/Maps, 701 South Cooper, P.O. Box 19497, Arlington, Texas 76019.

Dated at Rockville, Maryland, this 5th day of August 1994.

For the Nuclear Regulatory Commission.

William D. Beckner,

Director, Project Directorate IV-1, Division of Reactor Projects III/IV, Office of Nuclear Reactor Regulation.

[FR Doc. 94-19903 Filed 8-12-94; 8:45 am]

BILLING CODE 7590-1-M

Workshop on Integrated Safety Analysis for Nuclear Fuel Cycle Facilities

AGENCY: Nuclear Regulatory Commission.

ACTION: Meeting notice.

SUMMARY: The Nuclear Regulatory Commission (NRC) will hold a workshop to present a draft guidance document on Integrated Safety Analysis (ISA) of nuclear fuel cycle facilities and to obtain information from licensees, license applicants, and other interested parties relevant to the development of this document. This document will provide guidance to licensees and license applicants on methods of performing an ISA. This workshop is open to the public, and all interested parties may attend. (A workshop on the plan for this document was previously held on August 27, 1993.)

The draft document is available for review prior to this scheduled

workshop. Interested parties are encouraged to review the document and to submit their written comments to the NRC so they are received no later than September 6, 1994. Copies of the ISA document can be obtained from the NRC's Public Document Room 2120, L Street, NW, Washington, D.C. 20037; Phone: 202–634–3273; FAX: 301–634–3343. Written comments should be submitted to Joan Higdon, Mail Stop T–8–A–33, U.S. Nuclear Regulatory Commission, Washington, D.C. 20555; FAX: 301–415–5390; INTERNET: JXH1@NRC.GOV.

DATE: September 21, 1994, from 8:30 a.m. to 5:00 p.m.

ADDRESS: U.S. Nuclear Regulatory Commission, Two White Flint North, Auditorium, 11545 Rockville Pike, Rockville, Maryland. (Note: The NRC is accessible to the White Flint Metro Station; visitor parking in and around the NRC building is limited.)

FOR FURTHER INFORMATION CONTACT: Joan Higdon, Mail Stop T–8–A–33, U.S. Nuclear Regulatory Commission, Washington, D.C. 20555. Phone: 301–415–8082; FAX: 301–415–5390; INTERNET: JXH1@NRC.GOV.

SUPPLEMENTARY INFORMATION: The NRC is currently reviewing its regulations on Domestic Licensing of Special Nuclear Material (10 CFR Part 70) and supporting guidance. This review is the result of the findings and recommendations of the agency's Materials Regulatory Review Task Force and the Regulatory Impact Survey for Fuel Cycle and Materials Licensees. The purpose of the task force and the survey team was to evaluate the agency's licensing and oversight programs for fuel cycle and major materials plants, identify weaknesses, and recommend improvements. The task force's review and findings are contained in NUREG–1324, "Proposed Method for Regulating Major Materials Licensees," dated February 1992.

One of the recommendations of the task force was that the regulations be revised "* * * to require that a hazards analysis be performed for each system and component within each process that contains radioactive material or that serves as a barrier to the release of radioactive material to an unauthorized location." Therefore, under consideration by the staff is a requirement for Part 70 fuel cycle licensees or license applicants to perform an ISA and to include this information in a safety program description as part of their initial license application or license renewal. This information would also be required with a license amendment.

In performing an ISA, the analyst licensee will analyze the plant systems, subsystems, processes, and procedures; identify hazards and potential accidents that may affect radiological safety; consider the consequences of accidents; and identify controls to prevent such accidents or to mitigate their consequences. The final result will be an integrated evaluation of the safety of operation of the facility as a whole. An ISA will thus enable the licensee or license applicant to identify safety vulnerabilities so appropriate protective measures can be developed and will provide a basis for judging the safety of changes to process operations. The NRC inspectors will focus on those plant systems, subsystems, processes, and procedures are relied upon for safety.

Accordingly, a document has been developed, concurrent with the development of the revised 10 CFR Part 70, that could be of guidance to fuel cycle licensees or license applicants in performing an ISA. This workshop will also provide an opportunity for an exchange of information among fuel cycle licensees, license applicants, and the NRC staff on the draft document. Other interested parties will also have opportunities to participate in this information exchange.

Agenda items for this workshop will include NRC staff presentation and discussion of the draft guidance document and of the written comments received and NRC's resolution of these comments. The workshop will also include an information exchange between NRC staff and interested parties on the draft document and any other ISA-related topics. Attendees are requested to notify Ms. Joan Higdon at 301–415–8082 of their planned attendance to ensure adequate meeting room space and if any special requirements are needed (e.g., for the hearing-impaired).

Dated at Rockville, Maryland, this 8 day of August 1994.

For the Nuclear Regulatory Commission,

Robert F. Burnett,

Director, Division of Fuel Cycle Safety and Safeguards.

[FR Doc. 94–19906 Filed 8–12–94; 8:45 am]

BILLING CODE 7590–01–M

Advisory Committee on Reactor Safeguards Subcommittee Meeting on Thermal Hydraulic Phenomena; Meeting

The ACRS Subcommittee on Thermal Hydraulic Phenomena will hold a meeting on August 25 and 26, 1994, Room T–2B3, 11545 Rockville Pike, Rockville, Maryland.

The entire meeting will be open to public attendance.

The agenda for the subject meeting shall be as follows:

Thursday, August 25, 1994—8:30 a.m. until the conclusion of business

Friday, August 26, 1994—8:30 a.m. until the conclusion of business

The Subcommittee will discuss the NRC-Office of Nuclear Regulatory Research (RES) test and analysis programs being conducted in support of the AP600 and SBWR passive plant design certification efforts. Topics to be discussed include: the status of the AP600 integral test program being conducted at the ROSA–V facility and the status of the SBWR PUMA test program. The Subcommittee will also discuss a program to update NRC's fuel codes. The purpose of this meeting is to gather information, analyze relevant issues and facts, and to formulate proposed positions and actions, as appropriate, for deliberation by the full Committee.

Oral statements may be presented by members of the public with the concurrence of the Subcommittee Chairman; written statements will be accepted and made available to the Committee. Electronic recordings will be permitted only during those portions of the meeting that are open to the public, and questions may be asked only by members of the Subcommittee, its consultants, and staff. Persons desiring to make oral statements should notify the cognizant ACRS staff engineer named below five days prior to the meeting, if possible, so that appropriate arrangements can be made.

During the initial portion of the meeting, the Subcommittee, along with any of its consultants who may be present, may exchange preliminary views regarding matters to be considered during the balance of the meeting.

The Subcommittee will then hear presentations by and hold discussions with representatives of the NRC staff, its consultants, and other interested persons regarding this review.

Further information regarding topics to be discussed, whether the meeting has been cancelled or rescheduled, the Chairman's ruling on requests for the opportunity to present oral statements and the time allotted therefor can be obtained by contacting the cognizant ACRS staff engineer, Mr. Paul A. Boehnert (telephone 301/415–8065) between 7:30 a.m. and 4:15 p.m. (EST). Persons planning to attend this meeting are urged to contact the above named individual five days before the

scheduled meeting to be advised of any potential changes in the proposed agenda, etc., that may have occurred.

Dated: August 9, 1994.

Sam Duraiswamy,

Chief Nuclear Reactors Branch.

[FR Doc. 94–19898 Filed 8–12–94; 8:45 am]

BILLING CODE 7590–01–M

[Docket Nos. STN 50–454, STN 50–455, STN 50–456, STN 50–457]

Commonwealth Edison Co.; Notice of Consideration of Issuance of Amendment to Facility Operating License, Proposed No Significant Hazards Consideration Determination, and Opportunity for a Hearing

The U.S. Nuclear Regulatory Commission (the Commission) is considering issuance of amendments to Facility Operating License No. NPF–37, NPF–66, NPF–72, and NPF–77, issued to Commonwealth Edison Company (the licensee), for operation of Byron Station, Units 1 and 2, located in Ogle County, Illinois and Braidwood Station, Units 1 and 2, located in Will County, Illinois.

The proposed amendments consist of two parts: Part one, would revise "Moderator Temperature Coefficient (MTC)" Technical Specifications (TSs) to allow the use of a slightly positive MTC for the core design. The licensee has stated that a positive MTC will reduce the burnable rod requirements and improve operational flexibility. Because of using a positive MTC, the TSs would be revised to permit a higher boron concentration in the refueling water storage tank, the reactor coolant system (RCS) accumulators, and the refueling cavity, in order to ensure adequate shutdown margin is maintained at all times. Part two, would revise the TSs to reduce the required RCS flow to offset any reduction in flow due to increased steam generator tube plugging. Additionally, the associated Bases for the above TSs would be revised to describe the basis for the TS requirements.

Because Byron, Unit 1, and Braidwood, Unit 2, will be in refueling outage in the fall of 1994, the proposed TS changes will apply to them. Byron, Unit 2 and Braidwood, Unit 1 will continue to operate in accordance with the current TSs. the licensee's submittal identified the appropriate unit applicability of the TSs pertaining to the positive MTC and the required FCS flows.

Before issuance of the proposed license amendment, the Commission will have made findings required by the Atomic Energy Act of 1954, as amended (the Act) and the Commission's regulations.

The Commission has made a proposed determination that the amendment request involves no significant hazards consideration. Under the Commission's regulations in 10 CFR 50.92, this means that operation of the facility in accordance with the proposed amendment would not (1) involve a significant increase in the probability or consequences of an accident previously evaluated; or (2) create the possibility of a new or different kind of accident from any accident previously evaluated; or (3) involve a significant reduction in a margin of safety. As required by 10 CFR 50.91(a), the licensee has provided its analysis of the issue of no significant hazards consideration, which is presented below:

As required by 10 CFR 50.91(a), the licensee has provided its analysis of the issue of no significant hazards consideration, which is presented below:

A. The proposed changes do not involve a significant increase in the probability or consequences of an accident previously evaluated.

(1) The reduced thermal design flow and positive moderator temperature coefficient program includes corresponding increases to the [refueling water storage tank] RWST and accumulator required boron concentration. The analysis program and associated boron concentration changes will not affect the operability and integrity of plant systems and components. The analysis program also does not result in a condition that would challenge the design, material, and construction standards of the plant systems and components. Additionally, the safety functions of the evaluated systems and components remain unchanged. The safety analyses necessary to support the reduced [thermal design flow] TDF and [positive moderator temperature coefficient] PMTC program were performed (WCAP 13964) and found to be acceptable and consistent with the Byron and Braidwood original safety analysis bases. All Departure from Nucleate Boiling (DNB) Ratio (DNBR) design limits were determined such that there was a 95 percent probability at a 95 percent confidence level that a DNBR value of 1.25 for a typical and thimble cell were verified to have been met. The present Technical Specification limit for Nuclear Enthalpy Rise Hot Channel Factor, $F^N_{\Delta H}$ of less than 1.65 ensures that the limiting DNB ratio during normal operations and operational transients (Condition I and Condition II events) is greater than or equal to the DNBR limit of the correlation being applied thus fuel integrity will not be challenged.

The accidents which are found to be sensitive to PMTC were analyzed as part of this effort and the results were found to be acceptable. On a cycle-by-cycle basis, the impact of PMTC on Anticipated Trip Without Scram (ATWS) risk will be addressed by determining the Unfavorable Exposure Time (UET) per established Westinghouse Owners Group methodology, with corrective actions to be taken as appropriate to assure acceptable risk. The increase in the RWST and accumulator boron concentration will have no adverse impact on the previously evaluated accidents. The SGTP/TDF/PMTC program does not affect the integrity of the safety related systems and components such that their function to control radiological consequences is affected and all fission barriers will remain intact . The effects on offsite doses have been considered. The incorporation of a PMTC, a reduction in TDF and increased tube plugging levels will result in a small increase in offsite doses, however, the total doses remain a small fraction of the 10 CFR 100 limits. As such, the accident analysis acceptance criteria continue to be satisfied. Therefore, the probability or consequences of an accident previously analyzed in the [Updated Final Safety Analysis Report] UFSAR is not increased by the SGTP/TDF/PMTC program.

B. The proposed changes do not create the possibility of a new or different type of accident from any accident previously evaluated.

(2) The methodology and manner of plant operation as a result of the proposed changes is unchanged. The increased SGTP, reduced TDF, and PMTC program, which includes changes to the RWST and accumulator boron concentration, does not impact the safe operation of the reactor provided that the existing and proposed Limiting Conditions for Operation (LCOs) and the associated action requirements are satisfied.

The reactor response to normal temperature fluctuations will be different due to PMTC, however, the normal reactor control systems, as designed, will continue to maintain a stable primary system temperature and reliable power production. The assumptions do not create any new failure modes that could adversely impact safety related equipment. The related Safety Limits and LCOs in the plant Technical Specifications will be evaluated and satisfied for each future reload core design via the 10 CFR 50.59 process. All DNBR Limits have been satisfied. The typical and thimble fuel cells were verified to maintain a DNBR value of 1.25 at a 95 percent probability and 95 percent conference level. Other than the analysis for tube plugging, the proposed changes do not involve any equipment additions or modifications at the stations. Currently installed equipment will not be operated in a manner different than previously designed. Changes will be made to technical data within the existing station procedures, however, the analytical methods used to determine the data also remain unchanged. All aspects of the SGTP/TDF/PMTC program have been evaluated, and no new or different accidents or failure modes have been identified for any system or component important to safety. No new credible limiting single failure has been created.

Because the SGTP/TDF/PMTC program does not adversely affect the integrity of the steam generator or any other equipment, it is determined that the proposed changes do not create the possibility of a new or different

type of accident from any accident previously evaluated.

C. The proposed changes do not involve a significant reduction in a margin of safety.

(3) The performance and integrity of the evaluated safety-related systems and components are not affected by the proposed changes. The radiological consequences of all previously analyzed accidents remain unchanged. The reduced TDF and PMTC program, which includes changes to the RWST and accumulator boron concentration, will have no effect on the availability, operability, or performance of the evaluated safety-related systems or components. The reactor response to normal temperature fluctuations will be different due to PMTC, however, the normal reactor control systems, as designed, will continue to maintain a stable primary system temperature and reliable power production. The margin of safety associated with the licensing basis safety analysis is not significantly reduced by the proposed changes. All acceptance criteria for the specific UFSAR Chapter 15 safety analyses (Non-LOCA and LOCA) have been satisfactorily evaluated and verified using NRC approved methodologies. Therefore, there is no significant reduction in the margin of safety as defined in the bases of any affected Technical Specification.

The NRC staff has reviewed the licensee's analysis and, based on this review, it appears that the three standards of 10 CFR 50.92(c) are satisfied. Therefore, the NRC staff proposes to determine that the amendment request involves no significant hazards consideration.

The Commission is seeking public comments on this proposed determination. Any comments received within 30 days after the date of publication of this notice will be considered in making any final determination.

Normally, the Commission will not issue the amendment until the expiration of the 30-day notice period. However, should circumstances change during the notice period such that failure to act in a timely way would result, for example, in derating or shutdown of the facility, the Commission may issue the license amendment before the expiration of the 30-day notice period, provided that its final determination is that the amendment involves no significant hazards consideration. The final determination will consider all public and State comments received. Should the Commission take this action, it will publish in the **Federal Register** a notice of issuance and provide for opportunity for a hearing after issuance. The Commission expects that the need to take this action will occur very infrequently.

Written comments may be submitted by mail to the Rules Review and Directives Branch, Division of Freedom of Information and Publications Services, Office of Administration, U.S. Nuclear Regulatory Commission, Washington, DC 20555, and should cite the publication date and page number of this **Federal Register** notice. Written comments may also be delivered to Room 6D22, Two White Flint North, 11455 Rockville Pike, Rockville, Maryland, from 7:30 a.m. to 4:15 p.m. Federal workdays. Copies of written comments received may be examined at the NRC Public Document Room, the Gelman Building, 2120 L Street, NW., Washington, DC 20555.

The filing of requests for hearing and petitions for leave to intervene is discussed below.

By September 14, 1994, the licensee may file a request for a hearing with respect to issuance of the amendment to the subject facility operating license and any person whose interest may be affected by this proceeding and who wishes to participate as a party in the proceeding must file a written request for a hearing and a petition for leave to intervene. Requests for a hearing and a petition for leave to intervene shall be filed in accordance with the Commission's "Rules of Practice for Domestic Licensing Proceedings" in 10 CFR Part 2. Interested persons should consult a current copy of 10 CFR 2.714 which is available at the Commission's Public Document Room, the Gelman Building, 2120 L Street, NW., Washington, DC 20555 and at the local public document rooms, which for Byron is located at the Byron Public Library, 109 N. Franklin, Byron, Illinois 61010; and for Braidwood is located at the Wilmington Township Public Library, 201 S. Kankakee Street, Wilmington, Illinois 60481. If a request for a hearing or petition for leave to intervene is filed by the above date, the Commission or an Atomic Safety and Licensing Board, designated by the Commission or by the Chairman of the Atomic Safety and Licensing Board Panel, will rule on the request and/or petition; and the Secretary or the designated Atomic Safety and Licensing Board will issue a notice of hearing or an appropriate order.

As required by 10 CFR 2.714, a petition for leave to intervene shall set forth with particularity the interest of the petitioner in the proceeding, and how that interest may be affected by the results of the proceeding. The petition should specifically explain the reasons why intervention should be permitted with particular reference to the following factors: (1) the nature of the petitioner's right under the Act to be made party to the proceeding; (2) the nature and extent of the petitioner's property, financial, or other interest in the proceeding; and (3) the possible effect of any order which may be entered in the proceeding on the petitioner's interest. The petition should also identify the specific aspect(s) of the subject matter of the proceeding as to which petitioner wishes to intervene. Any person who has filed a petition for leave to intervene or who has been admitted as a party may amend the petition without requesting leave of the Board up to 15 days prior to the first prehearing conference scheduled in the proceeding, but such an amended petition must satisfy the specificity requirements described above.

Not later than 15 days prior to the first prehearing conference scheduled in the proceeding, a petitioner shall file a supplement to the petition to intervene which must include a list of the contentions which are sought to be litigated in the matter. Each contention must consist of a specific statement of the issue of law or fact to be raised or controverted. In addition, the petitioner shall provide a brief explanation of the bases of the contention and a concise statement of the alleged facts or expert opinion which support the contention and on which the petitioner intends to rely in proving the contention at the hearing. The petitioner must also provide references to those specific sources and documents of which the petitioner is aware and on which the petitioner intends to rely to establish those facts or expert opinion. Petitioner must provide sufficient information to show that a genuine dispute exists with the applicant on a material issue of law or fact. Contentions shall be limited to matters within the scope of the amendment under consideration. The contention must be one which, if proven, would entitle the petitioner to relief. A petitioner who fails to file such a supplement which satisfies these requirements with respect to at least one contention will not be permitted to participate as a party.

Those permitted to intervene become parties to the proceeding, subject to any limitations in the order granting leave to intervene, and have the opportunity to participate fully in the conduct of the hearing, including the opportunity to present evidence and cross-examine witnesses.

If a hearing is requested, the Commission will make a final determination on the issue of no significant hazards consideration. The final determination will serve to decide when the hearing is held.

If the final determination is that the amendment request involves no

significant hazards consideration, the Commission may issue the amendment and make it immediately effective, notwithstanding the request for a hearing. Any hearing held would take place after issuance of the amendment.

If the final determination is that the amendment request involves a significant hazards consideration, any hearing held would take place before the issuance of any amendment.

A request for a hearing or a petition for leave to intervene must be filed with the Secretary of the Commission, U.S. Nuclear Regulatory Commission, Washington, DC 20555, Attention: Docketing and Services Branch, or may be delivered to the Commission's Public Document Room, the Gelman Building, 2120 L Street, NW., Washington, DC 20555, by the above date. Where petitions are filed during the last 10 days of the notice period, it is requested that the petitioner promptly so inform the Commission by a toll-free telephone call to Western Union at 1–(800) 248–5100 (in Missouri 1–(800) 342–6700). The Western Union operator should be given Datagram Identification Number N1023 and the following message addressed to Mr. Robert A. Capra: petitioner's name and telephone number, date petition was mailed, plant name, and publication date and page number of this **Federal Register** notice. A copy of the petition should also be sent to the Office of the General Counsel, U.S. Nuclear Regulatory Commission, Washington, DC 20555, and to Michael I. Miller, Esquire; Sidney and Austin, One First National Plaza, Chicago, Illinois 60690, attorney for the licensee.

Nontimely filings of petitions for leave to intervene, amended petitions, supplemental petitions and/or requests for hearing will not be entertained absent a determination by the Commission, the presiding officer or the presiding Atomic Safety and Licensing Board that the petition and/or request should be granted based upon a balancing of the factors specified in 10 CFR 2.714(a)(1)(i)–(v) and 2.714(d).

For further details with respect to this action, see the application for amendment dated March 11, 1994, which is available for public inspection at the Commission's Public Document Room, the Gelman Building, 2120 L Street, NW., Washington, DC 20555 and at the local public document room located at the local public document rooms, which for Byron is located at the Byron Public Library, 109 N. Franklin, P.O. Box 434, Byron, Illinois 61010; and for Braidwood is located at the Wilmington Public Library, 201 S. Kankakee Street, Wilmington, Illinois 60481.

Dated At Rockville, Maryland, this 4th day of August 1994.

For the Nuclear Regulatory Commission.

George F. Dick, Jr.,

Project Manager, Project Directorate III–2, Division of Reactor Projects—III/IV, Office of Nuclear Reactor Regulation.

[FR Doc. 94–19904 Filed 8–12–94; 8:45 am]

BILLING CODE 7590–01–M

[Docket Nos. 50–325 and 50–324]

Carolina Power & Light Co.; Withdrawal of Application for Amendment to Facility Operating License

The U.S. Nuclear Regulatory Commission (the Commission) has granted the request of Carolina Power & Light Company (the licensee) to withdraw its August 6, 1992, application for proposed amendment to Facility Operating License Nos. 50–325 and 50–324 for the Brunswick Steam Electric Plant, Units 1 and 2, located in Brunswick County, North Carolina.

The proposed amendment would have revised Section 6 of the Technical Specifications to implement the functional role and responsibilities of the Nuclear Assessment Department (NAD). The NAD performs internal evaluations and assessment activities. The fundamental role of the NAD is to assist in the early identification of deficiencies that may prevent the Company's nuclear projects from achieving the desired level of performance on a sustained basis and to ensure effective correction of deficiencies. Because of major changes in the original submittal, the licensee has chosen to withdraw the previous amendment application and provide a new amendment request.

The Commission had previously issued a Notice of Consideration of Issuance of Amendment published in the **Federal Register** on September 16, 1992, (57 FR 42769). However, by letter dated July 22, 1994, the licensee withdrew the proposed change.

For further details with respect to this action, see the application for amendment dated August 6, 1992, as supplemented September 15, 1993, and the licensee's letter dated July 22, 1994, which withdrew the application for license amendment. The above documents are available for public inspection at the Commission's Public Document Room, 2120 L Street, NW., Washington, DC 20555, and at the University of North Carolina at Wilmington, William Madison Randall Library, 601 S. College Road, Wilmington, North Carolina 28403–3297.

Dated at Rockville, Maryland, this 8th day of August 1994.

For the Nuclear Regulatory Commission.

Patrick D. Milano,

Senior Project Manager, Project Directorate II–1, Division of Reactor Projects—I/II, Office of Nuclear Reactor Regulation.

[FR Doc. 94–19905 Filed 8–12–94; 8:45 am]

BILLING CODE 7590–01–M

[Docket No. 50–352 License No. NPF–39 EA 92–164]

PECO Energy Company, Limerick Generating Station Limerick, PA; Order Imposing a Civil Monetary Penalty

I

PECO Energy Company (Licensee) is the holder of Operating License No. NPF–39 (License), issued by the U.S. Nuclear Regulatory Commission (NRC or Commission). The License authorizes the Licensee to operate the Limerick Generating Station, Unit 1, in accordance with the conditions specified therein.

II

An administrative proceeding was conducted by the U.S. Department of Labor (DOL), consisting of an investigation and hearing, regarding a complaint filed January 30, 1992, by an employee of Protection Technology Inc. (PTI), a contractor for the PECO Energy Company at the Limerick Generating Station Limerick, Pennsylvania. As a result of this proceeding, a DOL Administrative Law Judge (ALJ) issued a Recommended Decision and Order finding that PTI discriminated against the employee in violation of Section 210 of the Energy Reorganization Act (subsequently changed to Section 211 by the Energy Policy Act of 1992) because he engaged in protected activity. Based on the ALJ's decision, the NRC concluded that a violation of the Commission's regulations set forth in 10 CFR 50.7 occurred. A written Notice of Violation and Proposed Imposition of Civil Penalty (Notice) was served upon the Licensee by letter dated December 10, 1992. The Notice states the nature of the violation, the provision of the NRC's requirements that the Licensee had violated, and the amount of the civil penalty proposed for the violation. The Licensee was allowed to defer payment or protest of the penalty until 30 days after the Secretary of Labor's review was completed. The Secretary of Labor issued a final decision on May 11, 1994, approving a

settlement reached between the parties. Subsequently, the Licensee responded to the Notice on June 10, 1994. In its response, the Licensee denied the violation and requested full remission or mitigation of the penalty of $25,000.

III

After consideration of the Licensee's response and the statements of fact explanation, and argument for full remission or mitigation contained therein, the NRC staff has determined, as set forth in Appendix to this Order, that the violation occurred as stated, and that the penalty proposed for the violation designated in the Notice should be imposed.

IV

In view of the foregoing and pursuant to Section 234 of the Atomic Energy Act of 1954, as amended (Act), 42 U.S.C. 2282, and 10 CFR 2.205, it is hereby ordered that:

The Licensee pay a civil penalty in the amount of $25,000 within 30 days of the date of this Order, by check, draft, money order, or electronic transfer, payable to the Treasurer of the United States and mailed to the Director, Office of Enforcement, U.S. Nuclear Regulatory Commission, ATTN: Document Control Desk, Washington, DC 20555.

V

The Licensee may request a hearing within 30 days of the date of this Order. A request for a hearing should be clearly marked as a "Request for an Enforcement Hearing" and shall be addressed to the Director, Office of Enforcement, U.S. Nuclear Regulatory Commission, Washington, DC 20555, with a copy to the Commission's Document Control Desk, Washington, DC 20555. Copies also shall be sent to the Assistant General Counsel for Hearings and Enforcement at the same address and to the Regional Administrator, NRC Region I, 475 Allendale Road, King of Prussia, Pennsylvania 19406.

If a hearing is requested, the Commission will issue an Order designating the time and place of the hearing. If the Licensee fails to request a hearing within 30 days of the date of this Order, the provisions of this Order shall be effective without further proceedings. If payment has not been made by that time, the matter may be referred to the Attorney General for collection.

In the event the Licensee requests a hearing as provided above, the issues to be considered at such hearing shall be whether the violation occurred as stated, and whether, on the basis of such violation, this Order should be sustained.

For the Nuclear Regulatory Commission.

James L. Milhoan,

Deputy Executive Director for Nuclear Reactor Regulation, Regional Operations and Research.

Dated at Rockville, Maryland this 8th day of August 1994.

Appendix—Evaluation and Conclusion

On December 8, 1992, a Notice of Violation and Proposed Imposition of Civil Penalty (Notice) in the amount of $25,000 was issued to PECO Energy Company (Licensee) for a violation based on the findings of a Department of Labor (DOL) Administrative Law Judge (ALJ) that a contractor security employee was unlawfully discriminated against. The Licensee responded to the Notice on June 10, 1994. The Licensee denied the violation, and requested full remission or mitigation of the penalty. The NRC's evaluation and conclusion regarding the Licensee's requests are as follows:

1. Restatement of the Violation

10 CFR 50.7 prohibits discrimination by a Commission licensee, permittee, an applicant for a Commission license or permit, or a contractor or subcontractor of a Commission licensee, permittee, or applicant against an employee for engaging in certain protected activities. Discrimination includes discharge and other actions that relate to compensation, terms, conditions, and privileges of employment. The activities which are protected include, but are not limited to, reporting of quality discrepancies and safety and safeguards concerns by an employee to his employer or the NRC.

Contrary to the above, an employee of Protection Technology, Inc. (PTI), a security subcontractor of PECO Energy Company, who was a security guard at the Limerick Nuclear Generating Station, was unlawfully discriminated against as described in the DOL ALJ Recommended Decision and Order issued June 22, 1992 (DOL Case 92–ERA–27). Specifically, the employee was required to undergo a psychological evaluation and was subsequently discharged on January 7, 1992, by PTI in retaliation for engaging in protected activities. The protected activities included raising safeguards concerns to licensee management regarding security operations while performing his duties at the Limerick Nuclear Generating Station.

This is a Severity Level III violation (Supplement VIII).

Civil Penalty—$25,000.

2. Summary of Licensee Response Denying the Violation

The Licensee, in its response, denied the violation and maintained that the contractor employee was requested to undergo a psychological evaluation as a non-discriminatory mechanism for determining if the employee's behavior, both during and before the January 1, 1992 incident, was representative of a true fitness-for-duty concern. The Licensee stated that this behavior was observed by both the contractor and Licensee supervision during the January 1, 1992 incident and other prior incidents (for which the Licensee submitted statements from contractor supervisors), and that the concerns had to be dealt with to fulfill the requirements set forth in 10 CFR Parts 26 and 73. The Licensee maintains that the employment action by the security contractor against its employee was based on the results of the psychological evaluation which indicated that the employee was not recommended for unescorted access to Limerick Generating Station. Therefore, the Licensee contends that the employment action was based entirely on a legitimate fitness-for-duty concern, and was not associated with any protected activity in which the contractor employee may have been involved.

The Licensee also indicated that in accordance with the established policy, the contractor employee was granted a psychological reevaluation a year after his disqualification and his access to Limerick Generating Station was restored based on his successful reevaluation.

3. NRC Evaluation of Licensee Response

The NRC has evaluated the Licensee's response and has determined that the Licensee has not provided an adequate basis for withdrawal of the violation. The information submitted by the Licensee in its response, dated June 10, 1994, and the correspondence referred to therein, had already been considered by the DOL ALJ in arriving at the conclusion that the Licensee contractor's action in discharging the employee was a violation of Section 210 of the Energy Reorganization Act of 1974 (Act), since recodified as Section 211. The NRC continues to rely on the ALJ Recommended Decision which concluded that the weight of evidence indicates that the action taken against the individual was based on his raising of safety and safeguards concerns, rather than concerns with the individual's fitness for duty.

According to the ALJ decision, the evidence showed that the primary motivating factor in PTI's decision to discharge the individual was his reporting of a security issue during and following the incident of January 1, 1992 because: he was suspended the next day without explanation and without displaying any aberrant behavior on that night; from January 2–5, 1992, PTI supervisors tried to gather all the evidence they could against the individual into a standard termination package; and PTI used a psychologist's conclusion of "not recommended for unescorted site access" as the reason to discharge the individual, despite the fact that PTI's own Employee Assistance Program stated that it is company policy to assist employees in seeking help to overcome mental health and other problems. The ALJ further stated that the fact that PTI chose to take action to discharge the individual rather than address any mental health problems suggested by the psychologist's evaluation implies that the PTI motive was to discharge the individual rather than to identify concerns about his mental health. The ALJ further stated that PTI would not have reached the same decision to discharge the individual in the absence of the protected activity in this case.

Based on the above, the violation remains as stated in the Notice.

4. Summary of Licensee's Response Requesting Mitigation of the Civil Penalty

The Licensee requested full remission or mitigation of the civil penalty even if, after consideration of the Licensee's response to the Notice of Violation, the NRC concludes that a violation of Commission regulations has occurred. The Licensee contends that in addition to 100% mitigation on the past performance factor, full mitigation on the corrective actions factor is warranted because the corrective actions described in the response were sufficient to ensure that the Licensee and its contractor employees are encouraged to identify perceived safety concerns without fear of discriminatory actions. Additionally, the Licensee stated that in April 1993, an independent review of its security contractor indicated that there was no fear of discriminatory actions for raising safety concerns by the contractor employees.

5. NRC Evaluation of Licensee Response

The NRC recognizes the corrective actions taken by the Licensee, as noted in the Licensee's letters dated May 8, 1992 (in response to a chilling effect letter issued by the NRC on April 9, 1992), and in Licensee responses, dated January 7, 1993, and June 10, 1994 (in response to the Notice of Violation and Proposed Imposition of Civil Penalty issued on December 8, 1992). Nonetheless, as explained in the NRC's December 8, 1992 letter transmitting the civil penalty, 50% escalation of the base civil penalty on the corrective action factor was considered appropriate because the Licensee's corrective actions, subsequent to the identification of the violation, were not comprehensive in that the Licensee's assessment of the event failed to include an independent review of the case to determine if the actions taken by the contractor in this matter were proper.

While the three referenced Licensee responses did refer to an independent review of the security organization conducted between April 27 and May 1, 1992, the review did not include an independent review of this case to assess the actions taken by the contractor, and, in any event, the review was not promptly initiated subsequent to the January 1992 event. In fact, the review occurred after the NRC issued a chilling effect letter on April 9, 1992, and after the DOL Wage and Hour Division District Director had found, in a letter dated February 28, 1992, that discrimination was a factor in the actions which comprised the individual's complaint. On this basis, the NRC concluded that full 50% escalation on the corrective actions factor was appropriate.

Since the Licensee's June 10, 1994 response does not contain any new information on the Licensee's corrective action that has not been considered by the NRC in arriving at the proposed enforcement action, a revision of the penalty on this factor is not warranted.

6. NRC Conclusion

The NRC concludes that the Licensee has not provided an adequate basis for withdrawing the violation, or mitigating the civil penalty based on the corrective action adjustment factor. Accordingly, the NRC has determined that a monetary civil penalty in the amount of $25,000 should be imposed.

OFFICE OF PERSONNEL MANAGEMENT

Federal Salary Council; Meetings

AGENCY: Office of Personnel Management.

ACTION: Notice of meetings.

SUMMARY: According to the provisions of section 10 of the Federal Advisory Committee Act (P.L. 92–463), notice is hereby given that the thirty-eighth and thirty-ninth meetings of the Federal Salary Council will be held at the times and places shown below. At the meetings the Council will continue discussing issues relating to locality-based comparability payments authorized by the Federal Employees Pay Comparability Act of 1990 (FEPCA). Specifically, at the thirty-eighth meeting on September 9, 1994, the Council will consider the establishment or modification of the geographic boundaries of pay localities for future locality-based comparability payments. Both meetings are open to the public.

DATE: September 9, 1994, at 10 a.m.

ADDRESS: Office of Personnel Management, 1900 E Street NW., Room 7B09, Washington, DC.

DATE: September 28, 1994, at 10 a.m.

ADDRESS: Office of Personnel Management, 1900 E Street NW., Room 5A06A, Washington, DC.

FOR FURTHER INFORMATION CONTACT: Ruth O'Donnell, Chief, Salary Systems Division, Office of Personnel Management, 1900 E Street NW., Room 6H31, Washington, DC 20415–0001. Telephone number: (202) 606–2838.

SUPPLEMENTARY INFORMATION: For the January 1994 locality comparability payments, the Council recommended and the President's Pay Agent approved 28 locality pay areas; 27 are Metropolitan Statistical Areas or Consolidated Metropolitan Statistical Areas, and the 28th is the Rest of the United States (RUS). The Council also recommended limited criteria for determining "areas of application"—i.e., counties contiguous to a pay locality or Federal facilities crossing pay locality boundaries.

The criteria are:

A. *County-wide areas of application.* To be considered, the affected county must—

- Be contiguous to a pay locality;
- Contain at least 2,000 General Schedule (GS) employees;
- Have a significant level of urbanization; and
- Demonstrate some common linkage with the survey location for the pay locality.

B. *Federal facilities crossing pay locality boundaries.* To be included in the pay locality, the portion of a Federal facility that crosses pay locality boundaries and is not in the pay locality must—

- Have at least 1,000 GS employees;
- Have the duty station(s) of the majority of the GS employees within 10 miles of the prime critical survey boundary area; and
- Have a significant number of its employees commuting from the pay locality.

The Council welcomes written comments on the identification of pay localities. All such submissions received by September 2, 1994, will be provided to the Council members and included in the record of the September 9, 1994, meeting.

The Council will consider brief oral presentations concerning the establishment or modification of pay area boundaries at the September 9, 1994, meeting. Persons wishing to address the Council personally should submit a written request by close of business September 2, 1994. The request should include the name of the person(s) wishing to appear, a short summary of the intended presentation, and an estimate of the time needed. The Council reserves the right to limit oral presentations if time constraints so dictate.

Written comments or requests to appear before the Council should be submitted to: Mr. Anthony F. Ingrassia, Acting Chairman, Federal Salary Council, 1900 E Street NW., Room 1340, Washington, DC 20415.

The Council will carefully consider oral and written comments before making its recommendations to the President's Pay Agent. The Office of Personnel Management, on behalf of the President's Pay Agent, will later publish proposed regulations regarding the pay area boundaries for a 30-day public comment period. The President Pay Agent will make the final decision on the boundaries and include this decision in its report to the President no later than November 30, 1994.

For the President's Pay Agent.

Lorraine A. Green,

Deputy Director.

[FR Doc. 94–19810 Filed 8–12–94; 8:45 am]

BILLING CODE 6325–01–M

SECURITIES AND EXCHANGE COMMISSION

(Release No. 34-34496; Filed No. SR-Amex-94-28)

Self-Regulatory Organizations; Notice of Filing and Order Granting Accelerated Approval to Proposed Rule Change by American Stock Exchange, Inc. Relating to a Pilot Program for Execution of Odd-Lot Market Orders

August 8, 1994.

Pursuant to Section 19(b)(1) of the Securities Exchange Act of 1934 ("Act"), 15 U.S.C. 78s(b)(1), notice is hereby given that on August 5, 1994, the American Stock Exchange, Inc. ("Amex" or "Exchange") filed with the Securities and Exchange Commission ("SEC" or "Commission") the proposed rule change as described in Items I and II below, which Items have been prepared by the self-regulatory organization. The Commission is publishing this notice to solicit comments on the proposed rule change from interested persons.

I. Self-Regulatory Organization's Statement of the Terms of Substance of the Proposed Rule Change

The Amex proposes that the Commission extend for three months the Exchange's existing pilot program under Rule 205 requiring execution of odd-lot market orders at the prevailing Amex quote with no differential charged.[1] The text of the proposed rule change is available at the Office of the Secretary, Amex, and at the Commission.

II. Self-Regulatory Organization's Statement of the Purpose of, and Statutory Basis for the Proposed Rule Change

In its filing with the Commission, the self-regulatory organization included statements concerning the purpose of, and basis for, the proposed rule change and discussed any comments it received on the proposed rule change. The text of these statements may be examined at the places specified in item III below. The self-regulatory organization has prepared summaries, set forth in Sections (A), (B), and (C) below, of the most significant aspects of such statements.

[1] The Exchange seeks accelerated approval of the proposed rule change in order to allow the pilot program, which expires on August 8, 1994, to continue without interruption.

A. Self-Regulatory Organization's Statement of the Purpose of, and Statutory Basis for the Proposed Rule Change

1. *Purpose*

The Commission has approved, on a pilot basis extending to August 8, 1994, amendments to Exchange Rule 205 to require the execution of odd-lot market orders at the prevailing Amex quote with no odd-lot differential.[2] The Exchange also has proposed to implement on a permanent basis its existing pilot procedures under Amex Rule 205.[3] These procedures initially were approved by the Commission on a pilot basis,[4] and subsequently were extended eight times.[5]

Under the pilot procedures, odd-lot market orders with no qualifying notations are executed at the Amex quotation at the time the order is represented in the market, either by being received at the trading post or through the Exchange's Post Execution Reporting ("PER") system. Enhancements to the PER system have been implemented to provide for the automatic execution of odd-lot market orders entered through PER. For purposes of the pilot program, odd-lot limit orders that are immediately executable based on the Amex quote at the time the order is received, at the trading post or through PER, are executed in the same manner as odd-lot market orders.

The Exchange proposes that the pilot program applicable to odd-lot execution procedures be extended for three months. This would provide the Commission with an additional period of time to assess procedures under the pilot program and would permit the Exchange to provide additional data and information regarding its experience under the pilot program.

[2] *See* Securities Exchange Act Release No. 33584 (February 7, 1994), 59 FR 6983 (February 14, 1994) (approving Filed No. SR-Amex-93-45).

[3] *Id.*

[4] *See* Securities Exchange Act Release No. 26445 (January 10, 1989), 54 FR 2248 (January 19, 1989) (approving File No. SR-Amex-88-23).

[5] *See* Securities Exchange Act Release Nos. 33584 (February 7, 1994), 59 FR 6983 (February 14, 1994) (approving File No. SR-Amex-93-45); 32726 (August 9, 1993), 58 FR 43394 (August 16, 1993) (approving File No. SR-Amex-93-24); 31828 (February 5, 1993) 58 FR 8434 (February 12, 1993) (approving File No. SR-Amex-93-06); 30305 (January 30, 1992), 57 FR 4653 (February 6, 1992) (approving File No. SR-Amex-92-04); 29922 (November 8, 1991), 56 FR 58409 (November 19, 1991) (approving File No. SR-Amex-91-30); 29186 (May 9, 1991), 56 FR 22488 (May 15, 1991) (approving File No. SR-Amex-91-09); 28758 (January 10, 1991), 56 FR 1656 (January 16, 1991) (approving File No. SR-Amex-90-39); and 27590 (January 5, 1990), 55 FR 1123 (January 11, 1990) (approving File No. SR-Amex-89-31).

2. *Basis*

The proposed rule change is consistent with Sections 6(b) and 11A(a)(1) of the Act in general and furthers the objectives of Section 6(b)(5) in particular in that its facilitates the economically efficient execution of odd-lot transactions, and is intended to result in improved execution of customer orders.

B. Self-Regulatory Organization's Statement on Burden on Competition

The proposed rule change will impose no burden on competition.

C. Self-Regulatory Organization's Statements on Comments on the Proposed Rule Change Received from Members, Participants, or Others

No written comments were solicited or received with respect to the proposed rule change.

III. Solicitation of Comments

Interested persons are invited to submit written data, views and arguments concerning the foregoing. Persons making written submissions should file six copies thereof with the Secretary, Securities and Exchange Commission, 450 Fifth Street, N.W., Washington, D.C. 20549. Copies of the submission, all subsequent amendments, all written statements with respect to the proposed rule change that are filed with the Commission, and all written communications relating to the proposed rule change between the Commission and any person, other than those that may be withheld from the public in accordance with the provisions of 5 U.S.C. § 552, will be available for inspection and copying at the Commission's Public Reference Section, 450 Fifth Street, N.W., Washington, D.C. 20549. Copies of such filing will also be available for inspection and copying at the principal office of the Amex. All submissions should refer to File No. SR-Amex-94-28 and should be submitted by September 6, 1994.

IV. Commission's Findings and Order Granting Accelerated Approval of Proposed Rule Change

In regard to the three month extension of the Amex's odd-lot execution pilot program, the Commission, for the same rationale discussed in its previous orders regarding these procedures,[6] finds that the proposed rule change is consistent with the requirements of the Act and the rules and regulations thereunder applicable to a national

[6] *See supra*, note. 5.

securities exchange and, in particular, with the requirements of Sections 6(b)[7] and 11A(a)(1)[8] of the Act and the rules and regulations thereunder. The Commission believes that the revised procedures, which provide for pricing of odd-lot market orders at the prevailing Amex quote rather than at the execution price of a subsequent transaction, should provide investors with more timely execution of these orders. Moreover, these orders should receive less costly executions than under the former procedures because no differential will be charged. In addition, the Exchange has implemented enhancements to its PER system for the automatic execution of odd-lot market orders, as set forth in the Commission's order approving the use of the pilot program procedures.[9]

In its previous orders,[10] the Commission asked the Amex to analyze the difference in executions between using the Intermarket Trading System ("ITS") consolidated best bid or offer as compared with the Amex quote without the differential. Specifically, the Commission expressed interest in whether customers are receiving the best execution, both in terms of price and time, using the new Amex system. The Commission was also interested in the feasibility of implementing an odd-lot pricing system using the ITS best bid or offer and no differential.[11]

In response, the Amex submitted the requested information with respect to the difference in executions between the ITS best bid or offer and the Amex quote to the Commission on January 9, 1991, April 22, 1991, October 25, 1991, February 4, 1993, August 3, 1993, November 16, 1993, April 14, 1994 and July 11, 1994.[12] The Amex data indicated that the pilot procedures provide a superior execution for a substantial majority of odd-lot executions.

Accordingly, the Commission believes that it is reasonable to extend the pilot for an additional three months to enable the Commission to review fully the Amex reports and to enable the pilot to continue without interruption during the Commission's review. The Commission, however, remains concerned that some odd-lot orders could receive executions at less than the best available price since the Exchange's pricing formula does not include quotations from other markets.[13] Nevertheless, due to the relatively low number of odd-lot market orders on the Amex,[14] the percentage of Amex quotes that are worse than the ITS best bid or offer, and the benefits to customers under the pilot program procedures as compared to the former pricing procedures, the Commission believes that it is acceptable to continue the pilot's current pricing procedures for an additional three months. During that period, the Commission requests that the Exchange continue to monitor the pilot and provide data on the number of Amex quotes executed that are worse than the ITS consolidated best bid and offer and on the number of odd-lots as a percentage of total Exchange share volume and of the total number of trades. Moreover, the Commission remains interested in the feasibility of implementing an odd-lot pricing system using the ITS best bid and offer and no differential. Accordingly, the Commission requests that the Amex evaluate the feasibility and cost of developing such a plan, along with a projected time frame for potential implementation.

The Commission finds good cause for granting approval of the proposed rule change prior to the thirtieth day after the date of publication of notice of filing thereof. This will permit the pilot program to continue on an uninterrupted basis. In addition, the procedures the Exchange proposes to continue using are the identical procedures that were published in the **Federal Register** for the full comment period and were approved by the Commission.[15]

It Is Therefore Ordered, pursuant to Section 19(b)(2)[16] of the Act, that the proposed rule change (SR–Amex–94–28) is approved for a three month period ending on November 8, 1994.

For the Commission, by the Division of Market Regulation, pursuant to delegated authority.[17]

Maraget H. McFarland,

Deputy Secretary.

[FR Doc. 94–19825 Filed 8–12–94; 8:45 am]

BILLING CODE 8010–01–M

---

[7] 15 U.S.C. § 78f (1988).

[8] 15 U.S.C. § 78k–1(a)(1) (1988).

[9] *See* Securities Exchange Act Release No. 26445, *supra* note 4, for a description of the Exchange's odd-lot procedures and the Commission's rationale for approving those procedures on a pilot basis. The discussion in the aforementioned order is incorporated by reference into this order.

[10] *See supra*, note 5.

[11] The Commission has approved amendments to the New York Stock Exchange's ("NYSE") rules which incorporate the ITS quote into the NYSE odd-lot pricing procedures through the use of the best Pricing quote ("BPQ"). *See* Securities Exchange Act Release No. 27981 (May 2, 1990), 55 FR 19409 (May 9, 1990) (File No. SR–NYSE–90–06).

[12] *See* letters from Michael Cavalier, Assistant General Counsel—Regulatory, Legal & Regulatory Policy Division, Amex, to Beth Stekler, Attorney, Division of Market Regulation, SEC, dated April 4, 1994 and July 7, 1994; letters from Arne G. Michelson, Senior Vice President, Total Quality—Floor Members, Amex, to Beth Stekler, Attorney, Division of Market Regulation, SEC, dated November 16, 1993, and to Sharon M. Lawson, Assistant Director, Division of Market Regulation, SEC, dated August 3, 1993; letter from Michael Cavalier, Assistant General Counsel, Regulatory, Legal & Regulatory Policy Division, Amex, to Diana Luka-Hopson, Branch Chief, Division of Market Regulation, SEC, dated February 3, 1993; and letters from Jules L. Winters, Executive Vice President, Operations, Amex, to Howard L. Kramer, Assistant Director, Division of Market Regulation, SEC, dated January 8, 1991, April 19, 1991 and October 23, 1991.

[13] *See supra*, note 11.

[14] *See* footnote 9 of Securities Exchange Act Release No. 29922 (November 8, 1991), 56 FR 58409.

[15] No comments were received in connection with the proposed rule change which implemented these procedures. *See supra* note 4.

[16] 15 U.S.C. § 78s(b)(2) (1988).

[17] 17 CFR 200.30–3(a)(12) (1991).

[Rel. No. IC–20450; No. 812–9078]

Minnesota Mutual Life Insurance Company, et al.; Application for Order

August 8, 1994.

AGENCY: Securities and Exchange Commission ("Commission" or "SEC").

ACTION: Notice of Application for an Order under the Investment Company Act of 1940 (the "1940 Act").

APPLICANTS: Minnesota Mutual Life Insurance Company ("Minnesota Mutual"), Minnesota Mutual Variable Annuity Account ("Variable Account"), and MIMLIC Sales Corporation ("MIMLIC Sales") (collectively, "Applicants").

RELEVANT 1940 ACT SECTIONS: Order requested under Section 6(c) of the 1940 Act granting exemptions from the provisions of Sections 26(a)(2)(C) and 27(c)(2) of the 1940 Act.

SUMMARY OF APPLICATION: Applicants seek an order permitting the deduction from the assets of the Variable Account of a mortality and expense risk charge in connection with the offer and sale of certain variable annuity contracts ("Contracts").

FILING DATE: The application was filed on June 28, 1994, and Amendment No. 1 to the Application was filed on August 4, 1994.

HEARING OR NOTIFICATION OF HEARING: An order granting the application will be issued unless the Commission orders a hearing. Interested persons may request a hearing by writing to the Commission's Secretary and serving the Applicants with a copy of the request, personally or by mail. Hearing requests should be received by the Commission by 5:30 p.m. on September 2, 1994 and should be accompanied by proof of service on Applicants in the form of an

affidavit or, for lawyers, a certificate of service. Hearing requests should state the nature of the writer's interest, the reason for the request, and the issues contested. Persons may request notification of a hearing by writing to the Commission's Secretary.

ADDRESSES: Secretary, SEC, 450 5th Street, NW., Washington, DC 20549. Applicants, c/o Donald F. Gruber, Esq., Senior Counsel, The Minnesota Mutual Life Insurance Company, 400 Robert Street North, St. Paul, Minnesota 55101–2098.

FOR FURTHER INFORMATION CONTACT: Yvonne Hunold, Senior Counsel, or Michael V. Wible, Special Counsel, at (202) 942–0670, Office of Insurance Products (Division of Investment Management).

SUPPLEMENTARY INFORMATION: Following is a summary of the application; the complete application is available for a fee from the Commission's Public Reference Branch.

Applicants' Representations

1. Minnesota Mutual is a mutual life insurance company licensed to do a life insurance business in the District of Columbia, Canada, Puerto Rico, and all states except New York.

2. The Variable Account is a separate account established by Minnesota Mutual and registered with the Commission under the 1940 Act as a unit investment trust. The Variable Account currently is divided into fourteen subaccounts ("Subaccounts"), each of which will invest in a corresponding portfolio of the MIMLIC Series Fund, Inc. ("MIMLIC Fund").

3. The MIMLIC Fund is a registered, diversified, open-end management investment company of the series type. MIMLIC Fund portfolios available for investment through the Subaccounts include: the Growth, Bond, Money Market, Asset Allocation, Mortgage Securities, Index 500, Capital Appreciation, International Stock, Small Company, Value Stock Portfolios and four Maturing Government Bond Portfolios. Additional portfolios may be added in the future, including portfolios other than those of the MIMLIC Fund. Shares of the MIMLIC Fund portfolios will be sold to the Separate Account at net asset value. Each portfolio of the MIMLIC Fund is responsible for all of its own expenses, including applicable investment advisory fees.

4. MIMLIC Sales will be the principal underwriter of the Contracts. MIMLIC Sales is a wholly-owned subsidiary of MIMLIC Corporation, a wholly-owned subsidiary of Minnesota Mutual. MIMLIC Sales is a registered broker-dealer under the Securities Exchange Act of 1934 and an investment adviser under the Investment Advisers Act of 1940.

5. The Contracts are individual variable annuity contracts designed for use in connection with retirement plans that may qualify for favorable federal income tax treatment under Sections 401, 403, 408 or 457 of the Internal Revenue Code of 1986, as amended. A registration statement on Form N–4 to register the Contracts under the Securities Act of 1933 ("1933 Act") has been filed with the Commission.

6. The Contracts provide for the accumulation of Contract Value on a variable basis through investments in the MIMLIC Fund Portfolios. No general account funding option is offered under the Contracts. The Contracts further provide for four annuity payment options, each of which may be elected on a variable or fixed basis. The amount and timing of purchase payments are determined by the Contract owner, subject to certain maximum amounts. The Contracts also will provide for the payment of a death benefit, which is equal to the greater of: (a) the Contract's accumulation value determined as of the next valuation following the date due proof of death is received by Minnesota Mutual; or (b) the total of the purchase payments made by or on behalf of the deceased Contract owner less any prior withdrawals.

7. No charge is made under the Contracts for contract administration or for premium taxes. Currently, no charge is made for transfers among the Portfolios, although the right is reserved to impose a charge of up to $25 for each transfer made on a more frequent basis than one per month.

8. No sales charge is deducted from premium payments under the Contracts. However, a contingent deferred sales charge ("CDSC") of up to 7% of the amount withdrawn or surrendered will be deducted on a decreasing basis over a seven year period. In no event will the sum of the CDSC exceed 9% of the purchase payments made under the Contract. Under the Contract, withdrawing a premium payment without imposition of a CDSC is possible only if seven years have elapsed since the payment was made. The CDSC will be applied to pay for Minnesota Mutual's costs of distributing the Contracts. Applicants acknowledge that revenues from the CDSC may be less than its costs of distributing the Contracts. In that event, the excess distribution costs would have to be paid out of Minnesota Mutual's general assets, which may include profits, if any, from the mortality and expense risk charges assessed under the Contracts.

9. A daily charge equal to an effective annual rate of 1.25% of the value of the assets in the Separate Account will be imposed to compensate Minnesota Mutual for bearing certain mortality and expense risks in connection with the Contracts. Of this amount, 0.80% is for mortality and 0.45% is for expense risks. The terms of the Contracts permit the mortality and expense risks charge to be increased to 1.40%. Applicants acknowledge, however, that any increase to the aggregate mortality and expense risks charge to more than 1.25% would require exemptive relief under the 1940 Act.

10. The mortality risk arises from Minnesota Mutual's contractual obligation to make Annuity Payments (determined in accordance with the annuity tables provided in the Contracts) regardless of how long a participant lives and regardless of any improvement in life expectancy generally. Thus, Minnesota Mutual assumes the risk that participants, as a class, may live longer than has been estimated by its actuaries, so that payments will continue for longer than had been anticipated. A mortality risk also is assumed in connection with the death benefit guarantee because the death benefit payment may exceed Contract Value.

11. The expense risk assumed by Minnesota Mutual arises primarily from Minnesota Mutual's not charging for contract administration and from the guarantees in the Contracts to make annuity payments in certain instances in accordance with annuity tables provided in the Contracts, regardless of whether its estimates of the expenses it expects to incur are correct.

Applicants' Legal Analysis

1. Section 6(c) of the 1940 Act authorizes the Commission, by order upon application, to conditionally or unconditionally grant an exemption from any provision, rule or regulation of the 1940 Act to the extent that the exemption is necessary or appropriate in the public interest and consistent with the protection of investors and the purposes fairly intended by the policy and provisions of the 1940 Act.

2. Sections 26(a)(2)(C) and 27(c)(2) of the 1940 Act, in relevant part, prohibit a registered unit investment trust, its depositor or principal underwriter, from selling periodic payment plan certificates unless the proceeds of all payments, other than sales loads, are deposited with a qualified bank and held under arrangements which prohibit any payment to the depositor or

principal underwriter except a reasonable fee, as the Commission may prescribe, for performing bookkeeping and other administrative duties normally performed by the bank itself.

3. Applicants request exemptions from Sections 26(a)(2) and 27(c)(2) of the 1940 Act to the extent necessary to permit the deduction from the assets of the Separate Account of a maximum charge of 1.25% for the assumption of mortality and expense risks. Applicants believe that the requested exemptions are necessary and appropriate in the public interest and consistent with the protection of investors and the purposes fairly intended by the policy and provisions of the 1940 Act.

4. Applicants submit that Minnesota Mutual is entitled to reasonable compensation for its assumption of mortality and expense risks. Applicants represent that the mortality and expense risk charge of 1.25% under the Contracts is consistent with the protection of investors because it is a reasonable charge to compensate Banner Life for the risks that: (a) Annuitants under the Contract will live longer individually or as a group than has been anticipated in setting the annuity rates guaranteed in the Contracts; and (b) the Account Value will be less than the death benefit.

5. Applicants represent that the 1.25% mortality and expense risk charge is within the range of industry practice for comparable annuity contracts. This representation is based upon Minnesota Mutual's analysis of publicly available information about similar industry products, taking into consideration such factors as any contractual right to increase charges above current levels, the existence of other charges, the number of transfers permitted without charge, and the ability to make free withdrawals. Minnesota Mutual will maintain at its home office, available to the Commission, memoranda setting forth in detail the products analyzed in the course of, and the methodology and results of, its comparative review.

6. Applicants acknowledge that, if a profit is realized from the mortality and expense risk charge, all or a portion of such profit may be available to pay distribution expenses not reimbursed by the CDSC. Minnesota Mutual has concluded that there is a reasonable likelihood that the proposed distribution financing arrangements will benefit the Separate Account and the participants. The basis for that conclusion is set forth in a memorandum which will be maintained by Minnesota Mutual at its service office and will be available to the Commission.

7. Minnesota Mutual also represents that the Separate Account will only invest in management investment companies which undertake, in the event they should adopt a plan under Rule 12b–1 to finance distribution expenses, to have a board of directors or trustees, a majority of whom are not "interested persons" of the company, formulate and approve any such plan.

Conclusion

For the reasons set forth above, Applicants represent that the exemptions requested are necessary and appropriate in the public interest and consistent with the protection of investors and the purposes fairly intended by the policy and provisions of the 1940 Act.

For the Commission, by the Division of Investment Management, pursuant to delegated authority.

Margaret H. McFarland,

Deputy Secretary.

[FR Doc. 94–19826 Filed 8–12–94; 8:45 am]

BILLING CODE 8010–01–M

DEPARTMENT OF TRANSPORTATION

Office of the Secretary

Application of Nations Air Express, Inc. d/b/a Miami Air Charter for Issuance of Certificate Authority

AGENCY: Department of Transportation.

ACTION: Notice of Order to Show Cause (Order 94–8–12) Docket 48729.

SUMMARY: The Department of Transportation is directing all interested persons to show cause why it should not issue an order (1) finding Nations Air Express, Inc. d/b/a Miami Air Charter fit, willing, and able and (2) awarding it a certificate of public convenience and necessity to engage in interstate scheduled air transportation of persons, property and mail.

DATES: Persons wishing to file objections should do so no later than August 23, 1994.

ADDRESSES: Objections and answers to objections should be filed in Docket 48729 and addressed to the Documentary Services Division (C–55, Room 4107), U.S. Department of Transportation, 400 Seventh Street, S.W., Washington, D.C. 20590 and should be served upon the parties listed in Attachment A to the order.

FOR FURTHER INFORMATION CONTACT: Mrs. Barbara P. Dunnigan, Air Carrier Fitness Division (X–56, Room 6401), U.S. Department of Transportation, 400 Seventh Street, S.W., Washington, D.C. 20590, (202) 366–2342.

Dated: August 5, 1994.

Patrick V. Murphy,

Acting Assistant Secretary for Aviation and International Affairs.

[FR Doc. 94–19867 Filed 8–12–94; 8:45 am]

BILLING CODE 4910–62–P

Aviation Proceedings; Agreements filed during the Week Ended August 5, 1994

The following Agreements were filed with the Department of Transportation under the provisions of 49 U.S.C 412 and 414. Answers may be filed within 21 days of date of filing.

Docket Number: 49708.

Date filed: August 5, 1994.

Parties: Members of the International Air Transport Association.

Subject: r-1 Comp Telex MV 698—Fares from Ethiopia/Eritrea, r-2 Comp Telex MV 699—Rates from Ethiopia/Eritrea, r-3 Comp Telex MV 700—Amend Rounding Units for Brazil.

Proposed Effective Date: September 1, 1994.

Phyllis T. Kaylor,

Chief, Documentary Services Division.

[FR Doc. 94–19863 Filed 8–12–94; 8:45 am]

BILLING CODE 4910–62–P

Applications for Certificates of Public Convenience and Necessity and Foreign Air Carrier Permits Filed Under Subpart Q During the Week Ended August 5, 1994

The following Applications for Certificates of Public Convenience and Necessity and Foreign Air Carrier Permits were filed under Subpart Q of the Department of Transportation's Procedural Regulations (See 14 CFR 302.1701 et. seq.). The due date for Answers, Conforming Applications, or Motions to Modify Scope are set forth below for each application. Following the Answer period DOT may process the application by expedited procedures. Such procedures may consist of the adoption of a show-cause order, a tentative order, or in appropriate cases a final order without further proceedings.

Docket Number: 49698.

Date filed : August 2, 1994.

Due Date for Answers, Conforming Applications, or Motion to Modify Scope: August 30, 1994.

Description: Application of Northwest Airlines, Inc., pursuant to Section 401 of the Act and Subpart Q of the Regulations, requests an amendment to its certificate of public convenience and necessity for Route 564 to provide scheduled foreign air transportation between (1) Detroit, Michigan and

Puerto Vallarta, Mexico, (2) Minneapolis/St. Paul, Minnesota and Ixtapa/Zihuatanejo, Mexico, (3) Minneapolis/St. Paul, Minnesota and Cozumel, Mexico, and (4) Detroit, Michigan and Ixtapa/Zihuatanejo, Mexico.

Docket Number: 49700.

Date filed: August 3, 1994.

Due Date for Answers, Conforming Applications, or Motion to Modify Scope: August 31, 1994.

Description: Application of Globe Azur Airline Inc. d/b/a Air Club International, pursuant to Section 402 of the Act and Subpart Q of the Regulations, applies for authority to operate non-scheduled charter flights between Canada and the United States.

Docket Number: 49704.

Date filed: August 5, 1994.

Due Date for Answers, Conforming Applications, or Motion to Modify Scope: September 2, 1994.

Description: Application of DHL Airways, Inc., pursuant to Section 401 of the Act and Subpart Q of the Regulations, for a certificate of public convenience and necessity authorizing it to provide nonstop all-cargo air services between any point or points in the United States and any point or points in the United Kingdom and Belgium.

Phyllis T. Kaylor,

Chief, Documentary Services Division.

[FR Doc. 94–19866 Filed 8–12–94; 8:45 am]

BILLING CODE 4910–62–P

National Highway Traffic Safety Administration

[Docket No. 94–60; Notice 1]

Receipt of Petition for Determination that Nonconforming 1994 Alfa Romeo 164 Quadrifogolio Passenger Cars Are Eligible for Importation

AGENCY: National Highway Traffic Safety Administration, DOT.

ACTION: Notice of receipt of petition for determination that nonconforming 1994 Alfa Romeo 164 Quadrifoglio passenger cars are eligible for importation.

SUMMARY: This notice announces receipt by the National Highway Traffic Safety Administration (NHTSA) of a petition for a determination that a 1994 Alfa Romeo 164 Quadrifoglio that was not originally manufactured to comply with all applicable Federal motor vehicle safety standards is eligible for importation into the United States because (1) it is substantially similar to a vehicle that was originally manufactured for importation into and sale in the United States and that was certified by its manufacturer as complying with the safety standards, and (2) it is capable of being readily modified to conform to the standards.

DATES: The closing date for comments on the petition is September 14, 1994.

ADDRESSES: Comments should refer to the docket number and notice number, and be submitted to: Docket Section, Room 5109, National Highway Traffic Safety Administration, 400 Seventh St., SW, Washington, DC 20590. [Docket hours are from 9:30 am to 4 pm].

FOR FURTHER INFORMATION CONTACT: Ted Bayler, Office of Vehicle Safety Compliance, NHTSA (202–366–5306).

SUPPLEMENTARY INFORMATION:

Background

Under 49 U.S.C. 30141(a)(1)(A) (formerly section 108(c)(3)(A)(i)(I) of the National Traffic and Motor Vehicle Safety Act (the Act)), a motor vehicle that was not originally manufactured to conform to all applicable Federal motor vehicle safety standards shall be refused admission into the United States unless NHTSA has determined that the motor vehicle is substantially similar to a motor vehicle originally manufactured for importation into and sale in the United States, certified under 49 U.S.C. 30115 (formerly section 114 of the Act), and of the same model year as the model of the motor vehicle to be compared, and is capable of being readily modified to conform to all applicable Federal motor vehicle safety standards.

Petitions for eligibility determinations may be submitted by either manufacturers or importers who have registered with NHTSA pursuant to 49 CFR Part 592. As specified in 49 CFR 593.7, NHTSA publishes notice in the **Federal Register** of each petition that it receives, and affords interested persons an opportunity to comment on the petition. At the close of the comment period, NHTSA determines, on the basis of the petition and any comments that it has received, whether the vehicle is eligible for importation. The agency then publishes this determination in the **Federal Register.**

J.K. Motors, Inc. of Kingsville, Maryland ("J.K.") (Registered Importer 90–006) has petitioned NHTSA to determine whether 1994 Alfa Romeo 164 Quadrifoglio passenger cars are eligible for importation into the United States. The vehicle which J.K. believes is substantially similar is the 1994 Alfa Romeo 164 Quadrifoglio that was manufactured for importation into, and sale in, the United States and certified by its manufacturer, Alfa Lancia Industriale, as conforming to all applicable Federal motor vehicle safety standards.

The petitioner claims that it carefully compared the non-U.S. certified 1994 Alfa Romeo 164 Quadrifoglio to its U.S. certified counterpart, and found the two vehicles to be substantially similar with respect to compliance with most Federal motor vehicle safety standards.

J.K. submitted information with its petition intended to demonstrate that the non-U.S. certified 1994 Alfa Romeo 164 Quadrifoglio, was originally manufactured, conforms to many Federal motor vehicle safety standards in the same manner as its U.S. certified counterpart, or is capable of being readily modified to conform to those standards.

Specifically, the petitioner claims that the non-U.S. certified 1994 Alfa Romeo 164 Quadrifoglio is identical to its U.S. certified counterpart with respect to compliance with Standards Nos. 102 *Transmission Shift Lever* Sequence * * *, 103 *Defrosting and Defogging Systems*, 104 *Windshield Wiping and Washington Systems*, 105 *Hydraulic Brake Systems*, 106 *Brake Hoses*, 107 *Reflecting Surfaces*, 109 *New Pneumatic Tires*, 113 *Hood Latch Systems*, 116 *Brake Fluid*, 124 *Accelerator Control Systems*, 201 *Occupant Protection in Interior Impact*, 202 *Head Restraints*, 203 *Impact Protection for the Driver From the Steering Control System*, 204 *Steering Control Rearward Displacement*, 205 *Glazing Materials*, 206 *Door Locks and Door Retention Components*, 207 *Seating Systems*, 209 *Seat Belt Assemblies*, 210 *Seat Belt Assembly Anchorages*, 211 *Wheel Nuts, Wheel Discs and Hubcaps*, 212 *Windshield Retention*, 214 *Side Door Strength*, 216 *Roof Crush Resistance*, 219 *Windshield Zone Intrusion*, 301 *Fuel System Integrity*, and 302 *Flammability of Interior Materials*.

Petitioner also contends that the vehicle is capable of being readily modified to meet the following standards, in the manner indicated:

Standard No. 101 *Controls and Displays:* (a) Substitution of a lens marked "Brake" for a lens with an ECE symbol on the brake failure indicator lamp; (b) recalibration of the speedometer/odometer from kilometers to miles per hour.

Standard No. 108 *Lamps, Reflective Devices and Associated Equipment:* (a) Installation of U.S.-model sealed beam headlamps and front sidemarkers; (b) installation of U.S.-model taillamp lenses which incorporate rear sidemarkers; (c) installation of a high mounted stop lamp; (d) replacement of

bulb failure modules with U.S.-model components.

Standard No. 110 *Tire Selection and Rims:* installation of a tire information placard.

Standrd No. 111 *Rearview Mirror:* replacement of the passenger side rearview mirror with a U.S.-model component.

Standard No. 114 *Theft Protection:* installation of a warning buzzer microswitch and a warning buzzer in the steering lock assembly.

Standard No. 115 *Vehicle Identification Number:* installation of a VIN plate that can be read from outside the left windshield pillar, and a VIN reference label on the edge of the door or latch post nearest the driver.

Standard No. 118 *Power Window Systems:* rewiring of the power window system so that the window transport is inoperative when the ignition is turned off.

Standard No. 208 *Occupant Crash Protection:* (a) installation of a seat belt warning buzzer, wired to the seat belt latch; (b) installation of knee bolsters to augment the vehicle's air bag based passive restraint system, which otherwise conforms to the standard.

Additionally, the petitioner states that bumper shocks, and, in some instances, reinforcement bars must be added to the non-U.S. certified 1994 Alfa Romeo 164 Quadrifoglio to comply with the Bumper Standard found in 49 CFR Part 581.

Interested persons are invited to submit comments on the petition described above. Comments should refer to the docket number and be submitted to: Docket Section, National Highway Traffic Safety Administration, Room 5109, 400 Seventh Street, SW., Washington, DC 20590. It is requested but not required that 10 copies be submitted.

All comments received before the close of business on the closing date indicated above will be considered, and will be available for examination in the docket at the above address both before and after that date. To the extent possible, comments filed after the closing date will also be considered. Notice of final action on the petition will be published in the **Federal Register** pursuant to the authority indicated below.

Authority: 49 U.S.C. 30141(a)(1)(A) and (b)(1); 49 CFR 593.8; delegations of authority at 49 CFR 1.50 and 501.8.

Issued on: August 9, 1994.

William A. Boehly,

Associate Administrator for Enforcement.

[FR Doc. 94–19861 Filed 8–12–94; 8:45 am]

BILLING CODE 4910–59–M

[Docket No. 93–60; Notice 2]

Denial of Petition for Import Eligibility Determination

This notice sets forth the reasons for the denial of a petition submitted to the National Highway Traffic Safety Administration (NHTSA) under 49 U.S.C. 30141(a)(1)(A) (formerly section 108(c)(3)(C)(i)(I) of the National Traffic and Motor Vehicle Safety Act (the Act)). The petition, which was submitted by G&K Automotive Conversion, Inc. of Santa Anna, California (G&K), a registered importer of motor vehicles, requested NHTSA to determine that a 1992 Range Rover multi-purpose passenger vehicle (MPV) that was not originally manufactured to comply with all applicable Federal motor vehicle safety standards is eligible for importation into the United States because (1) it is substantially similar to the version of the 1992 Range Rover that was originally manufactured for importation into and sale in the United States and that was certified by its original manufacturer as complying with the safety standards, and (2) it is capable of being rapidly modified to conform to all applicable Federal motor vehicle safety standards.

NHTSA published a notice in the **Federal Register** on September 7, 1993 (58 FR 47177) that contained a thorough description of the petition, and solicited public comments upon it. One comment was received in response to this notice, from the North American Engineering Office of Rover Group Ltd. (Rover), the vehicle's original manufacturer.

In its comment, Rover expressed disagreement with G&K's contention that the non-U.S. certified 1992 Range Rover is capable of being readily modified to conform to all applicable Federal motor vehicle safety standards. Rover principally noted that the chassis on the U.S. certified 1992 Range Rover differs from that on the non-U.S. certified model to meet the more stringent test requirements for fuel system integrity in Standard No. 301. Because these differences are integral to the chassis, and cannot be eliminated through the addition of individual components, Rover asserted that replacement of the chassis would be necessary to bring a non-U.S. certified 1992 Range Rover into compliance with Standard No. 301. In view of this circumstance, Rover contended that the non-U.S. certified 1992 Range Rover is not capable of being readily modified to conform to all applicable Federal motor vehicle safety standards, precluding it from being determined eligible for importation.

In a subsequent comment elaborating on this issue, Rover stated that the U.S. certified 1992 Range Rover has a higher gross vehicle weight rating (GVWR) and a greater towing capacity than its non-U.S. certified counterpart. To achieve these characteristics, Rover stated than an integral trailer hitch is incorporated into the chassis on the U.S.-certified model. Rover stated that it has tested vehicles equipped with this chassis for compliance with Standard No. 301, but has not performed equivalent testing for non-U.S. certified models.

Rover later advised NHTSA that the chassis on the U.S. certified 1992 Range Rover differs from that on the non-U.S. certified model in the following respects:

(1) A crash can is welded to the frame at the end of each side rail to absorb energy from a rear collision. Rover noted that these components are concealed by the bumper when the vehicle is assembled.

(2) Two large saddle plates are welded to the frame on the top of each side rail at a position adjacent to the fuel tank. These plates are intended to stiffen the area surrounding the fuel tank to help meet the high impact speed test requirements of Standard No. 301.

(3) Additional stiffening plates are attached in front of the intermediate rear cross member, next to the rear "A" frame mounting brackets, to help distribute the loads imparted to the chassis under Standard No. 301 test conditions.

(4) Additional load carrying capability under Standard No. 301 test conditions is provided by the "A" struts of the towing hitch assembly that is welded onto the chassis.

Rover stated that all of these additional components are installed on the chassis by the chassis supplier, using precise welding jigs and procedures, prior to the addition of corrosion inhibitors. Rover further stated that none of these components are available as individual parts.

After being apprised by NHTSA of the Standard No. 301 compliance issues raised by Rover, G&K was unable to demonstrate that the non-U.S. certified 1992 Range Rover is capable of being readily modified to conform to that standard. Accordingly, NHTSA has concluded that the petition does not clearly demonstrate that the non-U.S. certified 1992 Range Rover is eligible for importation. The petition must therefore be denied under 49 CFR 593.7(e).

In accordance with 49 U.S.C. 30141(b)(1) (formerly section 108(c)(3)(C)(ii) of the Act), NHTSA will not consider a new import eligibility petition covering this vehicle until at

least three months from the date of this notice.

Authority: 49 U.S.C. 30141(a)(1)(A) and (b)(1); 49 CFR 593.7; delegations of authority at 49 CFR 1.50 and 501.8.

Issued on: August 5, 1994.

William A. Boehly,

Associate Administrator for Enforcement.

[FR Doc. 94–19864 Filed 8–12–94; 8:45 am]

BILLING CODE 4910–59–M

DEPARTMENT OF THE TREASURY

Public Information Collection Requirements Submitted to OMB for Review

August 8, 1994.

The Department of Treasury has submitted the following public information collection requirement(s) to OMB for review and clearance under the Paperwork Reduction Act of 1980, Public Law 96–511. Copies of the submission(s) may be obtained by calling the Treasury Bureau Clearance Officer listed. Comments regarding this information collection should be addressed to the OMB reviewer listed and to the Treasury Department Clearance Officer, Department of the Treasury, Room 2110, 1425 New York Avenue, NW., Washington, DC 20220.

Internal Revenue Service (IRS)

OMB Number: 1545–0140

Form Number: IRS Forms 2210 and 2210F

Type of Review: Revision

Title: Underpayment of Estimated Tax by Individuals, Estates, and Trusts (Short Method and Regular Method (2210)) Underpayment of Estimated Tax by Farmers and Fishermen (2210F)

Description: Internal Revenue Code section 6654 imposes a penalty for failure to pay estimated tax. This form is used by taxpayers to determine whether they are subject to the penalty and to compute the penalty if it applies. The Service uses this information to determine whether the taxpayer is subject to the penalty, and to verify the penalty amount.

Respondents: Individuals or households, Farms, Businesses or other for-profit

Estimated Number of Respondents/Recordkeepers: 900,000

Estimated Burden Hours Per Respondent/Recordkeeper:

	Short method form 2210	Regular method form 2210	Form 2210F
Recordkeeping	7 min	13 min	33 min.
Learning about the law or the form	5 min	39 min	7 min.
Preparing the form	29 min	2 hr., 15 min	20 min.
Copying, assembling, and sending the form to the IRS	20 min	46 min	20 min.

Frequency of Response: Annually

Estimated Total Reporting/Recordkeeping Burden: 2,507,000 hours

Clearance Officer: Garrick Shear, (202) 622–3869, Internal Revenue Service, Room 5571, 1111 Constitution Avenue, N.W., Washington, DC 20224

OMB Reviewer: Milo Sunderhauf, (202) 395–7340, Office of Management and Budget, Room 10226, New Executive Office Building, Washington, DC 20503.

Dale A. Morgan,

Departmental Reports Management Officer.

[FR Doc. 94–19896 Filed 08–12–94; 8:45 am]

BILLING CODE 4830–01–P

Public Information Collection Requirements Submitted to OMB for Review

August 9, 1994.

The Department of Treasury has submitted the following public information collection requirement(s) to OMB for review and clearance under the Paperwork Reduction Act of 1980, Public Law 96–511. Copies of the submission(s) may be obtained by calling the Treasury Bureau Clearance Officer listed. Comments regarding this information collection should be addressed to the OMB reviewer listed and to the Treasury Department Clearance Officer, Department of the Treasury, Room 2110, 1425 New York Avenue, NW., Washington, DC 20220.

Internal Revenue Service (IRS)

OMB Number: 1545–0257

Form Number: IRS Forms 8109, 8109–B, and 8109C

Type of Review: Extension

Title: Federal Tax Deposit Coupon (8109 and 8109–B) FTD Address Change (8109C)

Description: Federal Tax Deposit Coupons are used to deposit certain types of taxes at authorized depositaries. Coupons are sent to IRS Centers for crediting to taxpayers' accounts. Data is used by the IRS to make the credit and to verify tax deposits claimed on the returns. The FTD Address Change is used to change the address on the FTD coupons. All taxpayers required to make deposits are affected.

Respondents: State or local governments, Farms, Businesses or other for-profit, Federal agencies or employees, Non-profit institutions, Small businesses or organizations

Estimated Number of Respondents: 9,800,700

Estimated Burden Hours Per Respondent:

Form No.	Response time
8109	2 minutes.
8109–B	3 minutes.
8109C	1 minute.

Frequency of Response: On occasion, Weekly, Monthly, Other (Semi-weekly, Monthly)

Estimated Total Reporting Burden: 2,016,425 hours

Clearance Officer: Garrick Shear, (202) 622–3869, Internal Revenue Service, Room 5571, 1111 Constitution Avenue, N.W., Washington, DC 20224

OMB Reviewer: Milo Sunderhauf, (202) 395–7340, Office of Management and Budget, Room 10226, New Executive Office Building, Washington, DC 20503.

Dale A. Morgan,

Departmental Reports Management Officer.

[FR Doc. 94–19897 Filed 08–12–94; 8:45 am]

BILLING CODE 4830–01–P

Sunshine Act Meetings

Federal Register
Vol. 59, No. 156
Monday, August 15, 1994

This section of the FEDERAL REGISTER contains notices of meetings published under the "Government in the Sunshine Act" (Pub. L. 94-409) 5 U.S.C. 552b(e)(3).

BOARD OF GOVERNORS OF THE FEDERAL RESERVE SYSTEM

TIME AND DATE: 10:00 a.m., Thursday, August 18, 1994.

PLACE: Marriner S. Eccles Federal Reserve Board Building, C Street entrance between 20th and 21st Streets, N.W., Washington, D.C. 20551.

STATUS: Closed.

MATTERS TO BE CONSIDERED:

1. Personnel actions (appointments, promotions, assignments, reassignments, and salary actions) involving individual Federal Reserve System employees.
2. Any items carried forward from a previously announced meeting.

CONTACT PERSON FOR MORE INFORMATION: Mr. Joseph R. Coyne, Assistant to the Board; (202) 452–3204. You may call (202) 452–3207, beginning at approximately 5 p.m. two business days before this meeting, for a recorded announcement of bank and bank holding company applications scheduled for the meeting.

Dated: August 11, 1994.

Jennifer J. Johnson,

Deputy Secretary of the Board.

[FR Doc. 94–19987 Filed 08–11–94; 10:26 am]

BILLING CODE 6210–01–P

FOREIGN CLAIMS SETTLEMENT COMMISSION

F.C.S.C. Meeting Notice No. 11–94

Announcement in Regard to Commission Meetings and Hearings

The Foreign Claims Settlement Commission, pursuant to its regulations (45 CFR Part 504), and the Government in the Sunshine Act (5 U.S.C. 552b), hereby gives notice in regard to the scheduling of open meetings and oral hearings for the transaction of Commission business and other matters specified, as follows:

Date and time	Subject matter
Tues., August 23, 1994 at:	Oral Hearings on objections to Proposed Decisions issued on claims against Iran:
9:30 a.m	IR–0386—Int'l School Supply Co.
10:00 a.m	IR–3054—Henry H. Shamoon, et al.
	IR–3055
	IR–3056
	IR–3057
10:30 a.m	IR–2984—Kathryn J. Rahmanzadeh
	IR–2985—Roya Rahmanzadeh
	IR–2986—Pari Rahmanzadeh
	IR–2987—Susanne Rahmanzadeh
11:00 a.m	IR–0709—Hayes Gahagan
11:30 a.m	IR–1145—John J. Brennan
2:00 p.m	IR–2416—Estate of Alex E. Nielson
	IR–2417—Ernest Rhoten
	IR–2418—Edward J. Cockerill
2:30 p.m	IR–1321—Ali Jarrahi
3:00 p.m	IR–0589—Thomas H. Hancock
3:30 p.m	IR–1296—Aliuddin & Kaneez Ahmed
4:00 p.m	IR–2603—Marion Overton White
Wed., August 24, 1994 at:	Oral Hearings continued:
9:30 a.m	IR–3207—Erwin David Rabhan
10:30 a.m	Consideration of Proposed Decisions on claims against Iran

Subject matter listed above, not disposed of at the scheduled meeting, may be carried over to the agenda of the following meeting.

All meetings are held at the Foreign Claims Settlement Commission, 600 E Street NW., Washington, DC. Requests for information, or advance notices of intention to observe a meeting, may be directed to: Administrative Officer, Foreign Claims Settlement Commission, 600 E Street, NW., Room 6029, Washington, DC 20579. Telephone: (202) 616–6988.

Dated at Washington, DC on August 10, 1994.

Judith H. Lock,

Administrative Officer.

[FR Doc. 94–19970 Filed 8–10–94; 4:13 pm]

BILLING CODE 4410–01–M

NATIONAL SCIENCE FOUNDATION

National Science Board

DATE AND TIME:

August 18, 1994, 1:30 p.m., Closed Session.
August 19, 1994, 8:30 a.m., Closed Session.
August 19, 1994, 10:30 a.m., Open Session.

PLACE: National Science Foundation, 4201 Wilson Boulevard, Room 1235, Arlington, Virginia 22230.

STATUS:

Part of this meeting will be open to the public.

Part of this meeting will be closed to the public.

MATTERS TO BE CONSIDERED:

Thursday, August 18, 1994

CLOSED SESSION (1:30 p.m.–3:45 p.m.)

—Minutes from June Meeting
—Grants and Contracts
—Budget and Planning

Open to the Public (4:00 p.m.) Swearing-In Ceremony for Deputy Director.

Friday, August 19, 1994

CLOSED SESSION (8:30 a.m.–10:30 a.m.)

—FY 96 Budget and Planning

OPEN SESSION (10:30 a.m.–11:00 a.m.)

—Minutes from June Meeting
—Chairman's Report
—Director's Report
—Report from Executive Committee
—Reports from Other Committees
—Other Business/Adjourn

Marta Cehelsky,

Executive Officer.

[FR Doc. 94–19994 Filed 8–11–94; 10:35 am]

BILLING CODE 7555–01–M

SECURITIES AND EXCHANGE COMMISSION

Agency Meeting

Notice is hereby given, pursuant to the provisions of the Government in the Sunshine Act, Pub. L. 94–409, that the Securities and Exchange Commission will hold the following meeting during the week of August 15, 1994.

A closed meeting will be held on Thursday, August 18, 1994, at 10:00 a.m.

Commissioners, Counsel to the Commissioners, the Secretary to the Commission, and recording secretaries will attend the closed meeting. Certain staff members who have an interest in the matters may also be present.

The General Counsel of the Commission, or his designee, has certified that, in his opinion, one or

more of the exemptions set forth in 5 U.S.C. 552b(c) (4), (8), (9)(A) and (10) and 17 CFR 200.402(a) (4), (8), (9)(i) and (10), permit consideration of the scheduled matters at a closed meeting.

Commissioner Wallman, as duty officer, voted to consider the items listed for the closed meeting in a closed session.

The subject matter of the closed meeting scheduled for Thursday, August 18, 1994, at 10:00 a.m., will be:

Institution of injunctive actions.
Institution of administrative proceedings of an enforcement nature.
Settlement of administrative proceedings of an enforcement nature.
Settlement of injunctive action.
Opinions.

At times, changes in Commission priorities require alterations in the scheduling of meeting items. For further information and to ascertain what, if any, matters have been added, deleted or postponed, please contact: Bruce Rosenblum (202) 942–0500.

Dated: August 11, 1994.

Jonathan G. Katz,

Secretary.

[FR Doc. 94–20013 Filed 8–11–94; 12:37 pm]

BILLING CODE 8010–01–M

TENNESSEE VALLEY AUTHORITY

(Meeting No. 1468)

TIME AND DATE: 10 a.m., August 17, 1994.

PLACE: TVA Knoxville Office Complex, 400 West Summit Hill Drive, Knoxville, Tennessee.

STATUS: Open.

Agenda

Approval of minutes of meeting held on July 20, 1994.

Discussion Item

1. Preliminary Rate Review.

Action Items

New Business

E—Real Property

E1. Request to Abandon TVA Flowage Easement Rights Affecting 2.2 Acres of Land on Watts Bar Lake, Tract No. WBR–1354F, Roane County, Tennessee.

E2. Supplement No. 4 to Duck River Project Agreement (TV–35326A) for Normandy Dam Fish Hatcher Water Lines and the Grant of Easement for Land Management Activities.

F—Unclassified

F1. Filing of Condemnation Cases.

F2. Delegation of Authority to Vice President, Fossil Fuels, to enter into 5-Year Requirements Contract with Dravo Materials Company, Inc., for Limestone at Cumberland Fossil Plant, Units 1 and 2.

F3. Contract with Sverdrup Civil, Inc., for Water Treatment Systems Upgrades for Colbert and Johnsonville Fossil Plants.

F4. Contract with Forney International, Inc., to Design and Furnish Ignitors, Burner Management Systems, and Technical Support for Shawnee Fossil Plant Units 1 through 9.

F5. Supplement 7 to Personal Services Control No. TV–82911V with RHR International Company for management support services.

F6. Supplements to Labor and Services Contracts Based on Watts Bar Nuclear Plant Unit 1 Completion Plan. The supplements are subject to final negotiations and review prior to execution.

F7. Supplement No. 12 to Contract 92NLA–86916B with Bechtel Corporation of Sequoyah Nuclear Plant, subject to final negotiations and review prior to execution.

F8. Partnering Contracts with Westinghouse Electric Corporation for Engineering and Outage Services and Replacement Parts for Watts Bar and Sequoyah Nuclear Plants, subject to final negotiations and review prior to execution.

F9. New Task Assignment Contracts with McCarty Holsaple McCarty, Incorporated, and Derthick Henley & Wilkerson, Incorporated, for Architectural Design, Engineering Design, and Related Services.

F10. Contract with J.A. Jones Management Services for Construction and/or Modification Services in the Tennessee Valley Region.

F11. Establishment of the Center for Rural Studies Trust.

Information Items

1. Approval of Sale of Noncommercial, Nonexclusive Permanent Recreation Easement Affecting 44.5 Acres on Tellico Lake in Loudon and Monroe Counties, Tennessee.

2. Approval of Residential Energy Efficiency Program.

3. Extension of the Construction Project Agreement and the Project Maintenance and Modifications Agreement for Five Years and Modifications to Those Agreements.

4. Designated Agency Safety and Health Official for Tennessee Valley Authority.

5. Grant of Easement Affecting Approximately 10.31 Acres of Land on Chickamauga Lake in Meigs and Rhea Counties, Tennessee.

CONTACT PERSON FOR MORE INFORMATION: Ron Loving, Vice President, Governmental Relations, or a member of his staff can respond to requests for information about this meeting. Call (615) 632–6000, Knoxville, Tennessee. Information is also available at TVA's Washington Office (202) 898–2999.

Dated: August 10, 1994.

William L. Osteen,

Associate General Counsel.

[FR Doc. 94–19999 Filed 8–11–94; 11:08 am]

BILLING CODE 8120–08–M

federal register

Monday
August 15, 1994

Part II

Department of Justice

Immigration and Naturalization Service

8 CFR Part 214

Temporary Alien Workers Seeking H–1B, O, and P Classifications Under the Immigration and Nationality Act; Final Rule

8 CFR Parts 214 and 274a

Foreign Employers Seeking to Employ Temporary Alien Workers in the H, O, and P Classifications; Proposed Rule

DEPARTMENT OF JUSTICE

Immigration and Naturalization Service

8 CFR Part 214

[INS NO. 1454–93]

RIN 1115–AC72

Temporary Alien Workers Seeking H–1B, O, and P Classifications Under the Immigration and Nationality Act

AGENCY: Immigration and Naturalization Service, Justice.

ACTION: Final rule.

SUMMARY: This final rule implements certain provisions of the Miscellaneous and Technical Immigration and Naturalization Amendments of 1991 as it relates to temporary alien workers seeking nonimmigrant classification and admission to the United States under sections 101(a)(15) (H), (O), and (P) of the Immigration and Nationality Act (Act). These amendments altered, among other things, the eligibility requirements for the H–1B, O, and P nonimmigrant classifications. This rule contains the new procedures required for these classifications and conforms Service policy to the intent of Congress as it relates to these classifications. This rule sets forth the new filing procedures and eligibility standards, and clarifies for businesses and the general public the requirements for classification and admission.

EFFECTIVE DATE: August 15, 1994.

FOR FURTHER INFORMATION CONTACT: John W. Brown, Adjudications Officer, Adjudications Division, Immigration and Naturalization Service, 425 I Street NW., Room 3214, Washington, DC 20536, telephone (202) 514–3946.

SUPPLEMENTARY INFORMATION: The Immigration Act of 1990 (IMMACT), Public Law 101–649, November 29, 1990, created, among other things, the O and P nonimmigrant classifications. These nonimmigrant classifications were to become effective on October 1, 1991, but the full implementation of these classifications was delayed until April 1, 1992 by the enactment of the Armed Forces Immigration Adjustment Act of 1991 (Pub. L. 102–110) which was signed into law on October 1, 1991. In response to concerns voiced by the public and other interested parties, the Miscellaneous and Technical Immigration and Naturalization Amendments of 1991, Pub. L. 102–232, dated December 12, 1991, was enacted which altered the eligibility requirements for certain portions of the O and P nonimmigrant classifications as contained in IMMACT and, in addition, added fashion models of distinguished merit and ability to the H–1B classification.

On April 9, 1992, at 57 FR 12179–12190, the Immigration and Naturalization Service (Service) published an interim rule with request for comments in order to implement the provisions of Pub. L. 102–232. Interested persons were invited to submit written comments on or before June 8, 1992.

This final rule amends the Service's regulations at 8 CFR 214.2 to reflect the changes made by the Miscellaneous and Technical Immigration and Naturalization Amendments of 1991, Public Law 102–232, December 12, 1991. The changes are discussed below. For the sake of convenience, the entire O and P regulations have been reprinted here.

Discussion of Comments on the Interim Regulations

The Service received 192 comments on the interim rule. Many of these commenters addressed more than one issue in their comments. The vast majority of the comments dealt with the O and P classifications. Only eight comments were received which addressed the H–1B classification. A number of commenters offered suggestions and improvements for the interim rule, many of which have been adopted in the final rule. The following discussion groups the comments into the various nonimmigrant classifications, discusses the issues raised, provides the Service's position on the issues and, finally, indicates the revisions adopted in the final rule, based on the public's concerns. A general provision section is also included in which topics relating to both the O and P classifications, such as filing by agents and the consultation process, are discussed. The final rule also contains a number of changes which were implemented as a result of the monitoring of the actual operation of the interim rule.

H–1B Nonimmigrant Classification

Occupations Included in the H–1B Classification—§ 214.2(h)(1)(i)

Seven commenters suggested that the Service include in the definition of the H–1B classification a number of support occupations normally encountered in the field of fashion modeling, such as hair stylists and make-up artists. Nothing in the statute or the legislative history indicates that Congress intended to include support occupations in the H–1B classification. The statute clearly limits the H–1B classification to aliens employed in a specialty occupation and to fashion models of distinguished merit and ability. Therefore, the Service cannot adopt this suggestion.

It should be noted that aliens employed in such fields as hair-styling may be able to obtain nonimmigrant classification under the O–1 classification or under the H–2B classification if eligible. The admission of these aliens into the United States is not precluded by the fact that they are not statutorily eligible for H–1B classification.

Evidentiary Criteria for Petitions for Fashion Models of Distinguished Merit and Ability—§ 214.2(h)(4)(vii)

The other comment received concerning the H–1B classification stated that the evidentiary criteria relating to the beneficiary's requirements for classification as an H–1B fashion model did not accurately reflect the nature of the industry. For example, the commenter stated that, generally speaking, awards are not available to fashion models and should not be listed as a criterion for establishing that a fashion model is of distinguished merit and ability. The final rule adopts the evidentiary criteria suggested by the commenter. The Service believes that the regulation now lists evidentiary criteria which are more appropriate to the industry.

O Nonimmigrant Category

Prior to discussing the comments relating to the O nomimmigrant classification, it must be noted that the final rule contains a number of adjustments in terminology. In the interim rule, the Service labeled the list of the types of evidence that a petitioner could submit to establish an alien's eligibility as "standards" for the classification. For example, in the interim rule, the heading of § 214.2(o)(3)(iv) was entitled "Standards for an O–1 alien of extraordinary ability in the fields of science * * *". The paragraph then proceeded to list the types of evidence that a petitioner could submit to establish the alien was of O–1 caliber. In reality, the standard for an alien of extraordinary ability in the O–1 classification is that the alien is one of the small percentage of individuals who have risen to the very top of their field of endeavor. The evidence submitted by the petitioner is not the standard for the classification, but merely the mechanism to establish whether the standard has been met. The paragraph headings for § 214.2(o)(3)(iii), (iv), and (v) have been amended to reflect this change in terminology.

The Service has also received comments that the interim rule is complicated as it appears to require a petitioner to submit two separate sets of evidence to establish the beneficiary's eligibility. In fact, the interim rule at § 214.2(o)(3) sets forth the evidentiary requirements for the classification while § 214.2(o)(6) describes the type of evidence which may be submitted to meet this requirement. However, in order to remove any ambiguity in this matter, the Service has amended the interim rule by changing the heading of the paragraph (o)(6), which provides a description of the evidence to be submitted, and moving it to paragraph (o)(2)(iii) in the final rule. As a result of this change, it should be clear to the public that the purpose of this particular paragraph is merely to provide a description of the types of evidence which may be submitted by a petitioner. For further clarification, the final rule also contains a new paragraph at (o)(2)(ii) which contains a general summary of the evidence required to be submitted for an O petition.

The five fields of activity included in the statute (sciences, arts, education, business, and athletics) are sufficiently broad so that aliens employed in most occupations within these fields may be classified as O–1 nonimmigrant aliens provided, of course, that such classification is not precluded by statute or regulation and the alien is eligible for such classification.

Form of Documentation—§ 214.2(o)(2)(iii)(A)

Twenty-five commenters suggested that the Service's requirement that the person in charge of an institution, firm, establishment, or organization where the beneficiary's work was performed should not be solely responsible for executing the documents submitted in support of an O petition. The commenters suggested that a responsible person, not necessarily the person in charge, should be permitted to endorse the supporting documentation. The Service agrees with this suggestion and the final rule will be amended to require that documentary evidence need only be endorsed by a responsible person at the organization, firm, institution, or establishment where the work was performed, and not necessarily the person in charge.

Services for More than One Employer—§ 214.2(o)(2)(iv)(B)

One individual suggested that the final rule contain a provision allowing an O–1 alien to work concurrently for two employers without the employers filing separate petitions for the alien. The statute requires that, prior to according an alien O–1 status, the Attorney General must determine if the alien will continue to be employed in the area of the extraordinary ability or achievement. This determination cannot be made unless each employer files a petition for the alien. Further, although approval of an O nonimmigrant petition does not involve a test of the U.S. labor market, the statute clearly requires that labor organizations, peer groups, and, in some cases, management organizations, must be consulted prior to according an alien O classification. In order to ensure that these criteria are met, separate petitions must be field by each employer. Therefore, this comment will not be adopted.

Change of Employer—§ 214.2(o)(2)(iv)(C)

This paragraph has been amended in the final rule to reflect that when an O alien changes employers, the new employer must also seek an extension of the alien's stay. This alteration makes the O regulation consistent with the P regulation.

The language contained in the interim rule has also been amended to reflect that in those situations where the petition was filed by an agent and the alien changes employers, the agent must file an amended petition reflecting the change. The agent must also file for an extension of stay. The language contained in the interim rule did not accommodate this situation.

Amended Petitions—§ 214.2(o)(2)(iv)(D)

The language contained in the interim rule has been amended to reflect that a petitioner may add additional performances, events, or competitions to a valid O petition without filing an amended petition. This amendment was adopted by the Service as a result of comments received from the public as a result of the operation of the interim rule.

Definitions of terms found in the O–1 Nonimmigrant Category—§ 214.2(o)(3)(ii)

One commenter suggested that chefs should be included in the definition of the term "arts". Since a chef requires skill and creative imagination in order to "create" dishes and meals, the Service will include culinary arts within the definition of the term "arts". Of course, a chef would have to meet the regulatory standards required for classification as an O–1 artist.

Fourteen commenters also recommended that the term arts should include not only principal creators and performers, but other essential persons such as, but not limited to, directors, set designers, and choreographers. Since there is legislative support for this suggestion at 137 Cong. Rec. S18247 (daily ed. Nov. 26, 1991), this suggestion will be adopted.

One commenter suggested that the definition of arts should specifically include those aliens involved in live musical performances and their embodiment in sound recordings. The suggestion will not be adopted since these entertainers are already included in the definition of arts as they are, obviously, performing artists. It should be noted that it is not feasible to list every occupation in the regulation which can be considered to fall within the very broad field of arts.

Forty-four commenters suggested that the final rule include a definition of the term "event" to provide guidance to petitioners as to what activities are covered by the petition. In response to these comments, the final rule now contains a definition of the term "event". The definition recognizes that short vacations often occur during an event or performance which are incidental and/or related to the event or performance. The Service will not include the term "layoffs" in the definition of the term "event", as the term commonly implies a negative and adverse action of unemployment. However, the definition will include language which allows for short stopovers between performances, such as in a tour. The Service believes that business events are adequately considered in the definition as business projects.

In response to a comment that the definition of the term extraordinary ability found in the interim rule was confusing, the definition has been amended in the final rule. For clarification, the final rule contains a definition of the term "extraordinary ability in the field of arts" and a separate definition of "extraordinary ability in the field of science, education, business, or athletics". For further clarification, the definition of the term "distinction" found in the interim rule has been included in the definition of the term "extraordinary ability in the field of arts".

Two commenters recommend that the definition of peer group be altered to be less restrictive. The definition of peer group contained in the interim rule required that the members of the peer group be of "similar standing with the alien". Due to the high standards for the O–1 category in the fields of science, business, education, and athletics, it would be very difficult for prospective petitioners to find a group of

individuals who were of similar standing with the beneficiary. Therefore,the definition of the term "peer group" has been modified in the final rule to remove this phrase.

One commenter, citing section 214(c)(6)(A)(i) of the act, suggested that the definition of peer group be amended to indicate that a peer group could be a person or persons of the alien's choosing with expertise in the alien's particular field of endeavor. The Service has interpreted this particular section of law as allowing petitioners to submit a consultation in the case of an O–1 alien of extraordinary ability from either a peer group or a person or persons of its choosing. It is the Service's opinion that the term "person or persons of its choosing" was placed into the statute as an alternate source for a consultation and was not included as a definition of the term "peer group." Therefore, this comment will not be adopted.

Criteria for Establishing That a Position Requires the Services of an Alien of Extraordinary Ability or Achievement—§ 214.2(o)(3)(iii)

Two commenters recommended that the criteria for establishing a position requiring the services of an O–1 nonimmigrant alien should be amended since such criteria relate more to the petitioner than the actual position itself. In addition, one commenter suggested that there is no statutory support for the requirement than an O–1 alien be coming to perform services requiring an alien of O–1 caliber. The commenter noted that the statute merely requires that the O–1 alien be coming to perform services in the area of extraordinary ability.

After careful consideration, the Service agrees that there is no statutory support for the requirement that an O–1 alien must be coming to the U.S. to perform services requiring an alien of O–1 caliber. As a result, this paragraph has been deleted from the final rule. The alien, however, must be coming to perform services in the area of extraordinary ability as is required in the statutory definition of the classification.

Evidentiary Criteria for an O–1 Alien of Extraordinary Ability in the Fields of Science, Education, Business, or Athletics—§ 214.2(o)(e)(iv)

Eighteen comments were received relating to the criteria for an alien of extraordinary ability in the fields of science, education, business, or athletics. One commenter suggested that a businessman could not obtain classification as an O–1 alien since the criteria for the classification did not readily accommodate individuals in the field of business. It is the opinion of the Service that the evidentiary criteria for aliens of extraordinary ability do accommodate business people. An O–1 business person, *i.e.*, a business person who is at the very peak of his or her occupation, would, in all likelihood, be able to meet many of the evidentiary criteria listed in the regulation. Also the "catch-all" category at § 214.2(o)(3)(iv)(C) allows for the submission of additional evidence not covered by the other criteria.

One commenter suggested that all hockey players in the National Hockey League should be eligible for O–1 classification. The Service cannot adopt this suggestion since extraordinary ability can only be accorded to the small percentage of individuals who have risen to the very top of their field of endeavor.

Fourteen commenters suggested that comparable evidence should be defined as "evidence appropriate to, and recognized within the field." The Service will not incorporate this suggestion into the final rule since it is not necessary. Clearly, any evidence submitted in support of an O–1 petition must relate to the alien's field of endeavor and be recognized in that field of endeavor or else it is of no value in the adjudication of the petition.

Four commenters also suggested that the comparable evidence criteria be eliminated as it compromises the other more specific criteria. The Service will not adopt this suggestion as the comparable evidence criteria merely allows petitioners in cases where the beneficiary is employed in an unusual or obscure field of endeavor to submit alternate, but equivalent, forms of evidence.

One commenter suggested that the O–1 criteria for university and college professors are excessive and should be altered. The Service will not adopt this suggestion since the O–1 category is reserved for those aliens who have reached the very top of their occupation or profession. The standard for the classification as created by Congress was designed to be extremely high and limited to only the best individuals employed in a particular field.

Evidentiary Criteria for an O–1 Alien of Extraordinary Ability in the Field of Arts—§ 214.2(o)(3)(v)

Under the statute, the standard for an O–1 artist is significantly lower than the standard for an alien of extraordinary ability in the fields of science, education, business, or athletics. Petitioners are required to establish only that the O–1 artist is prominent in his or her field of endeavor. Eligibility for O–1 classification in the field of arts is not limited to those aliens who have reached the very top of their professions as is required in the fields of science, business, education, or athletics. In order to establish an alien as an O–1 alien of extraordinary ability in the field of arts, the petitioner must submit evidence that the beneficiary has received, or been nominated for, a major international or national award or submit evidence relating to three of six other criteria. The regulation also allows the submission of comparable evidence if the six listed criteria cannot be met.

A number of comments were received addressing the evidentiary criteria for the classification. Many of the comments suggested that the criteria be altered in some fashion. One commenter suggested that the criteria for this category were duplicative and that by meeting one criterion, the alien would actually meet two. Thirteen commenters suggested that the interim regulation should be altered to provide that second or third place finishes in a prestigious competition qualify an alien as an O–1. Thirteen commenters also suggested that the receipt of lesser awards than those specified in the regulation should be a separate criterion in the regulation. One commenter stated that additional awards should be listed in the regulation for aliens employed in the recording industry.

The Service will not adopt any of the foregoing suggestions. It is recognized that a number of the criteria listed in the regulation are similar to one another, but it must also be noted that no two are identical. Further, the Service's decision in a particular case is also dependent upon the quality of the evidence submitted by the petitioner, not just the quantity of evidence. The mere fact that the petitioner has submitted evidence relating to three of the criteria as required by the regulation does not necessarily establish that the alien is eligible for O–1 classification.

The interim regulation also provides that O–1 eligibility can be established if the alien has been nominated for a significant national or international award. Thus, second and third place finishes are already contemplated in the regulation.

It must be noted that the awards listed in the regulation are provided merely as examples and are not all-inclusive. Other major national or international awards will also be considered by the Service in determining the alien's eligibility. The listing of every major national award in every field of endeavor is, therefore, not necessary. Finally, pursuant to § 214.2(o)(3)(v)(C),

it is understood that, in certain cases, a petitioner may submit evidence that the beneficiary has been the recipient of less significant awards in support of the petition.

Two commenters also recommended that the interim rule be amended to reflect that the salary of the proposed position should be high in relation to others in the field. Since, in some cases, the proffered salary may be indicative of the alien's level of recognition, the final rule has been amended to include language indicating that the alien's salary may be used as a criteria in establishing the alien's eligibility for O–1 classification. However, the Service recognizes that situations may arise where an O–1 alien is coming legitimately to the U.S. to perform services in a position where there is little or no salary. For example, an O–1 entertainer may be invited to come to the U.S. to perform at a charity event and receive no remuneration. The alien is still of O–1 caliber even though the proffered salary may be minimal. As a result, the alien's salary may be considered by the Service in determining the alien's eligibility but a high salary is not a mandatory requirement for establishing eligibility.

One commenter stated that the term "critical role" should be removed from the eligibility criteria for an O–1 alien since it was not contained in the pre-IMMACT H–1B regulations. The commenter noted that Congress desired that the criteria for aliens of extraordinary ability in the arts mirror the prior H–1B criteria for prominent aliens. The Service will not adopt this suggestion as the inclusion of this term does not alter or lessen the criteria for the classification in any meaningful fashion. The term merely expands and explains the criteria.

Evidentiary Criteria for Aliens of Extraordinary Achievement in the Field of Motion Picture and Television—§ 214.1(o)(3)(vi)

Three commenters suggested that the standard for aliens of extraordinary achievement in the motion picture and television industry should be higher than the standard for aliens of extraordinary ability in the arts. In the interim rule, the Service linked these two categories together. The Service now agrees that the standards for these two classifications are different and will incorporate this suggestion into the final rule.

One of the significant changes contained in Pub. L. 102–232 was that Congress provided a statutory definition to extraordinary ability in the arts. Congress has defined this term as "distinction", which has been interpreted by the Service to mean "prominence", *See* 137 Cong. Rec. S18247 (daily ed., Nov. 16, 1991). This statutory change effectively lowered the standard for aliens in the field of arts originally contained in IMMACT and differentiated the standard for artists for extraordinary ability from other aliens of extraordinary ability. However, Pub. L. 102–232 did not lower the standard for aliens of extraordinary achievement in the motion picture and television industry but left the standard intact. Thus, the Service can no longer link these two categories of aliens together since the categories now have different standards.

As a result, the final rule has been modified to reflect that an alien of extraordinary achievement in the field of motion pictures or television must meet a higher standard than that for an alien of extraordinary ability in the field of arts, namely, the prominence standard. The Service has defined the standard for aliens of extraordinary achievement in the field of motion pictures and television in the final rule as a very high level of accomplishment evidenced by a degree of skill and recognition significantly above that ordinarily encountered. The alien must be outstanding or notable in the field of endeavor. An alien who is merely well-known, *i.e.*, a prominent alien, would not qualify for this category.

It should be noted that the evidentiary criteria for aliens of extraordinary ability in the arts and for aliens of extraordinary achievement in the motion picture or television industry are the same. However, this does not mean the standards for the classification are the same. Again, the standard for the classification relates to the definition of the classification, not to the evidence submitted by the petitioner. Thus, while the Service will examine the same evidence for these two classifications, it will weight the evidence differently, and requires aliens of extraordinary achievement in the motion picture and television industry to meet a higher standard than aliens of extraordinary ability in the field of arts.

The effect of these regulatory and statutory changes is that there are now three distinct categories of aliens in the O–1 classification. One classification relates to aliens of extraordinary ability in the fields of science, education, business, or athletics. The standard for this classification is that the alien is one of the small percentage of persons who have risen to the top of this profession. The second classification relates to O–1 aliens of extraordinary ability in the field of arts. The standard for this classification is that the alien is prominent. The third category within the classification relates to aliens who are of extraordinary achievement in the field of motion pictures or television. The standard for this classification is that the alien is outstanding in his or her field, but not necessarily at the very top of the profession.

In order to effectuate this change, the final rule now contains a new paragraph at (o)(3)(vi) containing the criteria for O–1 aliens of extraordinary achievement in the field of motion pictures and television.

One commenter suggested that the standards for the categories within the O–1 classification do not reflect that the aliens must have sustained national or international acclaim. The Service believes that the descriptions of the classifications at § 214.1(o)1)(ii) accurately reflect Congressional intent since the regulatory language is taken directly from the statute.

Petition for an O–2 Accompanying Alien—§ 214.2(o)(4)

One commenter suggested that the reference to U.S. workers be deleted from the regulation as it was not contained in the statute. The statute requires that 0–2 aliens have critical skills and experience with the 0–1 alien which are not of a general nature and which are not possessed by other individuals. On the other hand, the interim rule merely requires that the petitioner establish that the alien have critical skills which are not possessed by a U.S. worker. The regulatory standard is, in effect, a lesser standard than that required by the statute. As a practical matter, the U.S. worker standard can be more easily established by a prospective petitioner than a worldwide worker standard because of the availability of the consultation process. Therefore, the Service will not adopt this suggestion since it would further complicate the petitioning process by requiring petitioners desiring to import essential support personnel to establish that the alien's skills and knowledge are not possessed by anyone else in the world. Clearly, Congressional intent in this area was to protect U.S. workers, not workers in other countries.

One commenter recommended that the Service should require that an accompanying alien have at least three years of experience with the 0–1 alien before accompanying alien status can be granted. The Service will not adopt this suggestion as it does not provide sufficient flexibility to accommodate aliens employed in the entertainment and sports fields.

Consultation Process for O Nonimmigrants—§ 214.2(o)(5)

A large number of comments were received from the public concerning the consultation process. This portion of the preamble discusses only those comments which relate to the consultation process for O petitions. The comments which relate to both the O and P classifications are discussed in the "general" discussion section of the preamble below.

Although a number of commenters have suggested otherwise, the Service strongly believes its interpretation of the consultation requirement as contained in IMMACT is correct and proper. The Service recognizes that the process is sometimes cumbersome and time-consuming. Further, the Service is aware that in some places, *e.g.*, Puerto Rico, an appropriate consulting entity may not exist. However, the consultation process is a requirement of the Act which provides the Service with valuable information in the adjudication of certain petitions. The Service has used the consultation process in order to obtain information from expert sources, *e.g.*, management organizations and labor organizations, concerning the nature of the proffered position as well as the credentials of the beneficiary. The final rule incorporates many of the suggestions provided by commenters. The suggestions which were adopted should make the process easier for the public to use.

Seventy-four commenters recommended that, in the case of an alien of extraordinary ability, an advisory opinion could be submitted in support of the petition by an expert in addition to a peer group or labor organization. Since this is provided for in the Act at section 214(c)(6)(A)(i), this suggestion will be adopted in the final rule. Section 214.2(o)(5)(ii) has been amended to reflect this change.

One commenter recommended that the waiver provision contained in paragraph (o)(5)(ii)(B) should be applied to all O–1 nonimmigrant aliens if they seek readmission to the United States to work in the same occupation. The waiver provision as described in the interim rule relates only to aliens of extraordinary ability in the field of arts. The Service will not adopt this suggestion since the consultation process is a statutory requirement and the waiver provision, found at section 214(c)(3) of the Act, is specifically limited to aliens of extraordinary ability in the field of arts. The Service does not have the authority to waive the consultation unless specifically provided for in the Act.

One commenter stated that the final rule should contain language providing that it is the petitioner's responsibility when requesting this waiver to provide a copy of the prior consultation and to specifically request the waiver in writing. The Service will adopt this suggestion and the final rule will be amended accordingly.

Ninety-four commenters stated that, in order to comply with section 214(c)(6)(B) of the Act, labor organizations should be able to respond to the Service's request for a written advisory opinion merely with a letter of no objection as opposed to a full discussion of the beneficiary's credentials and the proffered position. The commenters noted that in many cases involving petitions filed in the entertainment field, time is a crucial factor and a more detailed consultation could delay the adjudication of the petition. The Service agrees with this suggestion. This suggestion will be adopted and the final rule will be amended accordingly. Labor organizations may respond to the Service's request for a consultation with a simple letter of no objection if the labor organization has no objection to the approval of the petition. However, if the labor organization objects to the approval of the petition, the consultation must contain a detailed response to the Service's request for consultation.

It should be noted that petitions for 0–1 artists which are filed without a consultation from a labor organization will require additional time to adjudicate since the Service will be required to contact the national office of the appropriate labor organization. For this reason, petitioners in 0–1 cases should consider obtaining a consultation from a labor organization prior to filing the petition although not required to do so by statute.

In response to comments from field offices, paragraph(o)(5)(ii)(E), which relates to the process for obtaining expedited consultations, has been altered to remove the reference to peer groups. Pursuant to section 214(c)(6)(B) of the Act, since the Service is required to consult with a labor organization in those instances where a petition is accompanied only by a peer group consultation, the Service would not, as a matter of general practice, consult with a peer group prior to adjudicating a petition. Section 214(c)(6)(B) of the Act was drafted by Congress to ensure that organized labor could be provided with an opportunity to comment on a prospective employment situation. Congress did not intend to provide peer groups with the same opportunity since the provision is not contained in statute. However, Service officers have the discretion to contact a peer group prior to adjudicating a petition if it is deemed appropriate.

One commenter recommended that separate consultations should not be required for 0–2 nonimmigrant aliens. This comment will not be adopted since the Act requires that all petitions for 0–2 nonimmigrant aliens be accompanied by a consultation from a labor organization or a management organization with expertise in the specific field involved.

Admission Periods for O Nonimmigrants—§ 214.2(o)(10)

One commenter suggested that there should be no regulatory limit on the length of admission for an O nonimmigrant alien. The suggestion cannot be adopted since the period of stay for an O nonimmigrant is limited by the Act to the period of time required by the alien to complete the event or events described on the petition. An 0–1 classification may not be granted to an alien to enter the United States to free lance in the open market. An 0–1 alien must be coming to the United States for specific events.

The three-year period of time listed in the final rule relates only to the alien's initial period of admission. The alien's total period of stay in the United States will be limited to the duration of the event. There is no maximum time limit on the O–1's total stay in the United States.

The P Nonimmigrant Classification

Prior to discussing the comments for the P nonimmigrant classification, it must be noted that this portion of the final rule contains the same changes in terminology relating to standards and evidentiary criteria as in the O classification. The final rule no longer refers to the evidentiary criteria for a particular classification as the "standards" for the classification. The standard for a classification is not the evidentiary criteria for the classification, but the definition of the classification itself. The appropriate paragraph headings have been amended to reflect this change in terminology.

The final rule also contains a new paragraph § 214.2(p)(2)(ii) which summarizes the evidence required to be submitted with a P petition and a new paragraph (p)(2)(iii) which describes the evidence which can be submitted with a P petition. The addition of these two paragraphs should clarify the documentary requirements for the nonimmigrant classification.

Filing of Petitions—§ 214.2(p)(2)(i)

In order to accommodate the situation where a P–1 entertainment group will be performing in the United States without receiving a salary, (*e.g.*, performing in a benefit show) language has been added to the final rule indicating that a U.S. sponsor may also file a P–1 petition.

Since the publication of the interim rule, a number of individuals have inquired as to whether an individual entertainer could be petitioned for by a U.S.-based entertainment group under the P–1 classification. Also, one commenter suggested that the Service should not apply the 75 percent rule to U.S.-based entertainment groups. The Service has decided to address these issues in a separate rule.

A number of commenters stated that it was not clear whether an agent could file a P petition. The final rule contains language clarifying that P petitions may be filed by established U.S. agents.

Change of Employer—§ 214.2(p)(2)(iv)(C)

In order to accommodate those situations where an agent files a petition and where the alien change employers, this paragraph has been amended to reflect that the agent should file an amended petition with information relating to the new employer. The agent must also request an extension of the alien's stay.

Amended of Petitions—§ 214.2(p)(2)(iv)(D)

The language contained in the interim rule has been amended to reflect that a petitioner may add similar performances during the validity of a P petition without the necessity of filing an amended petition. This amendment was adopted by the Service as a result of public comments during the operation of the interim rule.

Multiple Beneficiaries—§ 214.2(p)(2)(iv)(F)

The interim rule contained the requirement that essential support personnel could not be included on the petition for the principal alien or aliens but, instead, should be filed on a separate petition. Sixty-nine commenters suggested that this procedure resulted in an unnecessary expense to petitioners who were required to submit two petitions for almost every entertainment act. These commenters suggested that in order to avoid this unnecessary expense, essential support personnel should be included in the petition for the principal alien. The Service is aware of the expense involved in filing these petitions but cannot adopt the suggestion. The Service is required by the Act to furnish an annual report to Congress addressing the occupations contained in P petitions. The only way that the Service can properly track these occupations is to require the submission of separate petitions for essential support personnel.

Definitions Found in the P Classification—§ 214.2(p)(3)

Event, Competition, or Performance

One commenter suggested that the definition of the term "event" as contained in the interim final rule be amended to include the duration of the alien's contract. The Service agrees with this suggestion and will adopt it in the final rule.

Another commenter suggested that the definition of event should be expanded for hockey players and other athletes. The Service believes the definition contained in the interim final rule is broad enough and, as written, contemplates an entire season or the length of the alien's contract, if longer than the season.

Labor Organization

Forty-four commenters suggested that the final rule contain a definition of the term "labor organization". The Service does not believe that such a definition is necessary because the term "labor organization" as used in the interim rule is the common, every-day usage of the term. Where the Service uses the common, every-day definition of a term, it need not be incorporated into the regulation.

Essential Support Personnel

A number of comments were also received from the public concerning the Service's definition of essential support personnel. As written in the interim rule, essential support personnel are highly skilled, essential workers who are determined to be an integral part of a P nonimmigrant's performance which cannot be performed by a U.S. worker. The rule requires that the support alien have prior experience with the principal alien.

Eighteen commenters suggested that the Service delete the requirement that essential support personnel have experience with the principal alien and three commenters stated that the requirements for the support aliens were too high. Forty-one commenters also suggested that the reference to U.S. workers should be removed.

The Service will not modify the definition of essential support personnel. The requirement that the essential support personnel have experience with the principal alien is based on the language found in the Act describing the P–1 classification. The Act requires that P–1 classification may be granted to an alien entertainer who performs with or is an integral and essential part of the performance of a group. It is the Service's view that in order to become an integral and essential part of the performance, the essential support personnel must have had experience with the group.

In order to clarify the final rule regarding essential support personnel, two new paragraphs have been added at (p)(6)(iii) and at (p)(7)(iii) which discuss petitions for essential support personnel for the P–2 and P–3 categories.

Evidentiary Criteria for an Internationally Recognized Athlete or Athletic Team § 214.2(p)(4)(ii)(B)

One commenter suggested that a major league contract should be sufficient evidence to establish P–1 classification. The Service agrees with this suggestion to a certain extent and has made arrangements with the National Hockey League as well as Major League Baseball to establish guidelines for these sports separate from, but consistent with, the regulatory criteria. These guidelines will be published in the Service's operations instructions.

Since the implementation of the interim rule, the Service has received a number of questions from the public as to how the evidentiary criteria for the classification relate to amateur athletes. The Service has crafted the rules relating to P–1 athletes with the professional athlete in mind. Amateur athletes are properly classifiable under the B–1 nonimmigrant classification and, as a result, the criteria contained in the regulation may not accommodate them.

In order to accommodate those sports where the athlete is not required to sign a written contract, the final rule contains language indicating that a written contract need not be submitted if such contracts are not normally used in the particular sport.

Evidentiary Criteria for Members of Internationally Recognized Entertainment Groups—§ 214.2(p)(4)(iii)(B)

In order to establish eligibility for P–1 status, the petitioner must demonstrate that the group is internationally recognized. The interim final rule provides that a petitioner can establish the group's eligibility by submission of evidence that the aliens have received or been nominated for a

significant international award or prize. In lieu of the above, petitioners may also submit three forms of evidence from a list of six items to establish eligibility.

Forty-one commenters suggested that the final rule contain a "catch-all" category as contained in the O–1 regulation to accommodate those instances where the evidence required by the regulation cannot be obtained for the particular industry in which the alien is employed. The suggestion will not be adopted since this portion of the P–1 classification relates only to the field of entertainment. The six evidentiary criteria listed in the regulation should accommodate all aliens employed in the field of entertainment. The "catch-all" category was placed in the O–1 regulation since the regulation addressed the field of arts, a much broader field than the field of entertainment.

One commenter suggested that an alien's nomination for a significant award should not be a criterion for establishing P–1 classification an that only the actual winner of the award should be able to use this criterion. Prior to the publication of the interim rule, the Service entered into lengthy meetings with organized labor and with management organizations in the entertainment field to develop the criteria for this classification consistent, of course, with Congressional intent. The criteria listed in the regulation are the end result of those meetings and are agreeable to both sides. It is the opinion of the Service that the criteria contained in the interim rule are fair and equitable and should not be altered.

One commenter suggested that an entertainment group should be required to establish that it has been internationally recognized for a period of 1 year. The suggestion cannot be adopted as it has no support in the Act. The Act merely requires that it be established for 75 percent of the group has been performing regularly for a period of 1 year and that the group is internationally recognized for a sustained and substantial period of time. There is no statutory requirement that the group be internationally recognized for a period of 1 year.

One commenter stated that newer entertainment groups would have difficulty meeting the evidentiary criteria for the P–1 classification. This statement is accurate since the clear language of the Act indicates that a P–1 entertainment group must have been internationally recognized for a sustained and substantial period of time. Congress intended that only those entertainment groups which had achieved a certain level of fame would be eligible for the classification. Entertainment groups which do not have the required international recognition may be petitioned for under the H–2B classification, which does not have a qualitative standard.

The interim final rule requires that 75 percent of the members of an entertainment group must be employed on a regular basis by the group. One commenter suggested that this language should be changed to reflect that only intermittent employment with the group should be required for P–1 classification. The Service cannot adopt this suggestion since the Act requires that the group be together for a sustained and substantial period of time. Sustained employment with the group cannot be interpreted as intermittent. While a group is not required to perform on a continual basis, it must be established that when the group does perform, 75 percent of the members of the group are regular performers with the group.

Thirteen commenters object to the requirement that petitioners are required to list every member of the group on the petition when it is filed. This comment will not be adopted since the Service must have all the group members listed on the petition in order to verify that 75 percent of the group has been performing together on a regular basis. Additionally, consular posts use the list of names provided on the petition to issue visas and the Service uses the list to issue entry documents to the aliens at Ports-of-Entry.

The interim rule contains the language that the group, under the name listed on the petition, must have been performing regularly for a period of 1 year. Twenty-two commenters suggested that a petitioner should be required only to establish that the group is substantially the same, even though the group name may be different. In response to this suggestion, the Service will remove this requirement from the regulation. A group may be accorded P–1 status based on its recognition under a prior name provided the group is currently of P–1 caliber and 75 percent of the members of the group have been performing regularly for a period of 1 year.

One commenter also recommended that the interim rule be amended to reflect that the salary of the proposed position should be high in relation to others in the field. Since, in some cases, the proffered salary may be indicative of the P–1 group's level of recognition, the final rule has been amended to include language indicating that the group's salary may be used as a criteria in establishing the eligibility for P–1 classification. However, the Service recognizes that situations may arise where a P–1 alien is coming legitimately to the U.S. to perform services in a position where there is little or no salary. For example, a P–1 entertainment group may be invited to come to the U.S. to perform at a charity event and receive no remuneration. The group is still of P–1 caliber even though the salary may be minimal. As a result, while salary may be considered by the Service in determining the alien's eligibility, a high salary is not a mandatory regulatory requirement for establishing eligibility.

One commenter suggested that the criteria for the P classification were duplicative and do not reflect international recognition. As discussed under O nonimmigrant classification, some of the criteria are similar but no two are identical. It is the opinion of the Service that if the criteria as contained in the interim rule are met, the alien or aliens have international recognition. Therefore, this suggestion will not be adopted.

Alien Circus Personnel—§ 214.2(p)(4)(iii)(C)

P–1 circus personnel are exempt from the international recognition requirement and the 1-year group membership requirement. Sixteen commenters stated that the language contained in the interim rule did not clearly state this and suggested that the actual statutory language be used in its place. In order to avoid any possible confusion concerning this issue, the Service will adopt this suggestion and amend the final rule to indicate that circus personnel are exempt from both the 1-year group membership requirement and the international recognition requirement. It must established by the petitioner that the circus for which the aliens are coming to perform is recognized nationally. It must also be remembered that 0–1 circus performers must meet the standard for that classification, not the P–1 classification.

The P–2 Nonimmigrant Classification—§ 214.2(p)(5)

The P–2 classification relates to aliens who are coming to the United States under a reciprocal exchange program agreement between an organization in the United States and an organization or organizations in a foreign country. Such a reciprocal exchange program agreement can be between management groups. Although § 214.2(p)(5) was promulgated as a final rule on December 2, 1991, 56 Fed. Reg. 61135, 28 comments were received relating to the

P-2 classification. Twenty-six commenters suggested that the Service remove the requirement from the final rule that the P-2 alien be experienced since the requirement was not contained in the Act. The Service agrees with this suggestion and will remove the requirement from the final rule. Petitioners in P-2 cases are not required to establish that the aliens involved in the reciprocal exchange are experienced.

One commenter suggested that petitions for P-2 nonimmigrant aliens should be approved for a period of 3 months since a significant number of P-2 nonimmigrant aliens would be entering the United States for numerous short-term engagements. The commenter noted that petitioners for P-2 nonimmigrant aliens would be required to file numerous, repeat petitions to accommodate all the various events in which the same alien would be engaged over a short period of time. The commenter suggested that, in order to facilitate the use of the P-2 classification, the Service should grant P-2 petitions for a period of 3 months regardless of the nature of the supporting event.

The Service cannot ignore the statutory requirement that a P-2 alien must be coming to the United States to perform in a specific event or events. However, in order to accommodate the situation described by the commenter, the Service will consider the period of the reciprocal exchange agreement to be the event and not the underlying performances. As a result, P-2 petitions may be initially approved for the duration of the reciprocal exchange agreement, not to exceed 1 year. The definition of the term "event" has been altered to reflect this change.

One organization also suggested that the U.S. labor organization involved in the reciprocal exchange agreement be permitted to file the petition since P-2 aliens are normally working for more than one employer in the United States. In order to accommodate the special circumstances of the P-2 nonimmigrant classification, the Service will allow the U.S. labor organization which is party to the reciprocal exchange agreement to file the P-2 petitions using the same guidelines which relate to the filing of P petitions by establishing U.S. agents described in 8 CFR 214.2(p)(iv)(E).

The P-3 Nonimmigrant Classification—§ 214.2(p)(6)

The P-3 classification relates to aliens, either individually or as part of a group, who are coming to the United States solely to perform, teach, or coach under a culturally unique program. A number of commenters stated that the standard and criteria for this classification as contained in the interim rule were very restrictive and imposed a number of requirements and qualitative standards which had no statutory basis. For example, eight commenters noted that there was no statutory support for the concept that P-3 aliens had to have achieved international acclaim while fifty-eight commenters stated that there was no statutory requirement that P-3 beneficiaries must perform for cultural, governmental, or educational institutions.

The Service has carefully reviewed the many comments received concerning the P-3 nonimmigrant classification and has made a number of changes in the final rule to incorporate these suggestions. The final rule requires only that the P-3 alien be coming to the United States solely to perform, teach, or coach in culturally unique events. The petitioner may be a commercial producer and there is no longer a requirement that the events must be performed at cultural, governmental, or education institutions.

However, all of the events in which the aliens will be performing must be culturally unique. Consistent with the interim rule, there is no requirement that a P-3 group have performed together for any specific period of time.

The documentary requirements for a P-3 petition have also been amended in response to the comments. Petitioners merely have to submit evidence addressing the cultural uniqueness of the performance and evidence that all performances are culturally unique. The qualitative standards contained in the interim rule for P-3 nonimmigrant aliens have been removed.

One commenter suggested that consultations for P-3 petitions should not be required as it should be assumed that there are no consulting organizations for P-3 petitions due to the uniqueness of the performances or the art form. The Service cannot adopt this suggestion since the consultation from a labor organization will provide the Service with the important information necessary to make the determination as to whether the performance is, in fact, culturally unique.

Seven commenters suggested that the regulations were too restrictive with respect to folk and traditional artists. As stated earlier, the documentary requirements relating to P-3 petitions contained in the interim rule have been altered. These alterations should make it easier for prospective petitioners to petition for folk or traditional artists. Petitioners must still establish, however, that the folk music is culturally unique.

Consultation Process for P Nonimmigrants—§ 214.2(p)(7)

This section addresses the comments received from the public relating specifically to the consultation process for P nonimmigrant aliens. Comments relating to both the O and P classifications are discussed in the general comment section.

The interim rule provides that where petitions for O-1 aliens of extraordinary ability are filed without a consultation from an appropriate labor organization, the Service is required to notify the national office of the appropriate labor organization within 5 days of the receipt of the petition. The labor organization then has 15 days to respond to the request. After the labor organization responds, the Service then has 14 days to adjudicate the petition. Forty-one commenters suggested that the "5-day rule" should be applied to P-1 and P-3 nonimmigrant petitions. The Service cannot adopt this suggestion since it is not appropriate to the P nonimmigrant category. By statute, all petitions for P nonimmigrant aliens must be accompanied by a consultation from a labor organization. As a result, the Service would not have a reason to notify a labor organization to obtain an opinion since it would have been submitted by the petitioner.

Forty-four commenters stated that the final rule should apply the 14-day adjudication timeframe discussed in the previous paragraph to petitions filed for the P-1 and P-3 nonimmigrant classifications. The Service does not wish to apply an arbitrary timeframe on the processing of P petitions since it will serve no useful purpose. When local conditions at a particular Service Center adversely affect the processing time for P petitions, the Service believes that an arbitrary timeframe will do little to correct the situation. The Service is aware of the importance of the timely adjudication of P petitions and will do everything possible to ensure that they are adjudicated in a reasonable fashion.

Two commenters stated that labor organizations should not extract agreements from petitioners and beneficiaries prior to providing the required consultations. The monitoring of the negotiations between the petitioner, the beneficiary, and the consulting organization is beyond the scope of the Service's authority. While the Service has no policing authority under the legislation in this area, it obviously does not condone any consulting entity requiring a petitioner or beneficiary to enter into an agreement

outside of normal industry practices prior to providing the consultation.

Two commenters stated that the consultation process allows labor unions, not the petitioner, to decide who should be employed. The Service disagrees with this statement since the consultation is an advisory opinion and is not binding on the Service. Service officers are not bound by the opinions of the consulting organization. The Act clearly states that it is the Service, not the consulting organization, which decides whether or not a petition for an O or P should be approved.

Twenty-nine commenters suggested that the final rule should contain a regulatory provision describing the procedure for establishing that a labor organization does not exist and, further, that the regulation should include an appeal procedure to determine if, in fact, a labor organization exists. The Service does not wish to add a provision into the final regulation establishing a formal procedure for determining if a labor organization exists since the procedure may differ for various fields of endeavor. It would seem, however, that the easiest method of establishing the nonexistence of a labor organization would be to submit affidavits or letters from practitioners in the field or from a related labor organization stating that a labor organization does not exist. The Service, obviously, has the final say as to whether the evidence submitted is sufficient to establish the non-existence of a labor organization.

One commenter suggested that there should be a regulatory provision waiving the consultation for a period of 1 year for P–1 aliens where there has been a previous consultation and the alien is returning to the United States to perform in a similar role.

The Service will not adopt this suggestion since there is no statutory support for a waiver of the consultation process in this instance.

In view of the special provisions relating to circus personnel contained in the Act, a new paragraph at (p)(7)(iii) has been added in the final rule to address the consultation requirements for this class of alien. Consultations for circus personnel should address the national recognition of the petitioning circus or any other aspect of the petition which the labor organization deems appropriate.

General Comments Relating to Both the O and P Classifications

Twenty-nine commenters stated that there should be no restrictions on foreign entertainers entering the United States. The commenters opined that the implementation of the regulations will cause harm to the U.S. entertainment industry since foreign countries will take reprisal actions against U.S. workers abroad.

It is the opinion of the Service that the restrictions contained in this final rule reflect the intent of Congress in drafting the legislation. If Congress had desired to allow for the admission of all foreign entertainers and athletes without restriction, the statutory language would have reflected this intent.

It must also be noted that the standards for the various entertainment categories within the O and P classifications are, for the most part, the same as the pre-IMMACT H–1B regulations relating to prominent aliens. The implementation of this rule, therefore, is not a significant change in policy or operating procedure but a continuation of past practices. As a result, the Service does not envision the final rule adversely affecting the entertainment industry.

Petition Extensions

The interim rule contains the requirement that extensions of stay may be granted in order to continue or complete the event on which the initial petition was predicated. Forty-seven commenters suggested that petition extensions should be granted to complete new events. The Service will not adopt this suggestion. The initial admission of an O or P nonimmigrant is statutorily limited to specific events or activities. In adjudicating O and P petitions, the Service is required to examine the event or events listed on the petition as well as the evidence relating to the qualifications of the alien to determine if the petition can be approved. The addition of new events, in most cases, will require the Service to review these new events to determine if the petition remains valid. Thus, it follows that new events will require the filing of a new petition, not an extension of an existing petition. If the new events are merely additional engagements to the initial tour, an extension of stay would be appropriate.

Extension Periods for O and P Nonimmigrants

Under the interim rule, extensions for O and P nonimmigrants may be granted in increments of 1 year. One commenter suggested that extensions should be granted for longer periods of time, noting the fees charged by the Service for this adjudication. The 1-year period for an extension is a device devised by the Service to ensure that the alien beneficiaries are complying with the terms of the initial petition. Through experience, the Service has learned that some alien entertainers have used nonimmigrant classifications to freelance and seek employment in direct competition with U.S. entertainers. Admission as an O or P nonimmigrant is limited to a specific event or events. As a result, this suggestion will not be adopted.

Foreign Film Crews

One commenter suggested that foreign film crews should not be classified as O nonimmigrants but, instead, should be classified as B–1 nonimmigrant aliens. It has long been the Service's position that foreign film crews are not eligible for B–1 classification as it cannot be clearly established that the film will not be shown in the United States at some future point in time. Thus, foreign film crews cannot meet the accrual of profits test called for under the B–1 nonimmigrant classification. *See Matter of Hira*, 11 I&N Dec. 824, (BIA, 1965). Foreign film crews must be petitioned for under the O classification.

Consultation Process

As indicated previously, the consultation process generated a great number of comments from the public. A number of modifications were made to the consultation process as a result of the comments received from the public. In addition, the Service has made a number of modifications in the consultation process as a result of the operation of the interim rule, which are also discussed in this section. As indicated previously, the comments relating specifically to the O and P categories are contained in the discussion relating to those categories.

In general, all petitions for O and P classifications must be filed with a consultation from an appropriate consulting entity. In the case of P nonimmigrants, the petition must be filed with a consultation from a labor organization having expertise in the alien's field of endeavor. It does not matter whether the labor organization has entered into a collective bargaining agreement covering individuals employed in the alien's field of endeavor, as the Act merely requires that the labor organization have expertise in the alien's field of endeavor.

For O–1 petitions for aliens of extraordinary ability in the field of science, business, education, athletics, or arts, a petition must be accompanied by a consultation from a peer group or other person or persons (which may include a labor organization) of its choosing with expertise in the area of the alien's employment. However, if the petition is filed with a consultation

which is not from a labor organization, the Service is required to notify the national office of the appropriate union. As as result of this notification process, the Service strongly suggests that petitioners in the case of O–1 aliens of extraordinary ability be accompanied by a consultation from a labor organization so that the Service does not have to add additional time to the adjudication process to wait for the response from the labor organization. However, it must be noted that petitioners are not precluded in this instance from submitting a consultation from a peer group or other person or persons (which may include a labor organization) of its choosing with expertise in the area of the alien's employment.

Petitions for aliens of extraordinary ability in the motion picture or television field must be filed with two consultations, one from a labor organization and one from a management organization.

The only exception that the Service makes to these requirements is in the case of expedited petitions. If the Service determines that a petitioner's request for expedited processing is warranted,the Service will obtain the required consultation or consultations on its own and then adjudicate the petition.

Although not specifically addressed in the Act, petitioners are required to obtain consultations from United States labor organizations, peer groups, and management organizations, not foreign organizations. Foreign organizations, peer groups, and management organizations would not be aware of employment conditions in the United States. In addition, where possible, petitioners should obtain consultations from the national offices of the appropriate labor organization. Local labor organizations are not equipped to provide consultations and do not have knowledge of labor market conditions in other parts of the United States.

Eighty-three commenters stated that it is possible that a consulting organization may not wish or be able to provide the required consultation within a satisfactory timeframe. These persons suggested that the regulations should contain a 15-day timeframe in which a consulting organization must respond to a petitioner's request for a consultation prior to filing the petition with the Service.

The Service is concerned that some consulting entities may engage in dilatory tactics, either intentionally or unintentionally, and not provide a request consultation to a prospective petitioner within a reasonable period of time. However, the Service does not wish to impose a regulatory 15-day timeframe on consulting entities because such a regulation would be unenforceable and would result in lengthening petition processing times. There is no mechanism which can be devised which can accurately determine with certainty whether or not a consulting entity had been approached by a prospective petitioner and whether the consulting entity every responded to a petitioner's request for a consultation. Further, as of this writing, the Service is unaware of any circumstances where a consulting entity has not provided a consultation to a prospective petitioner within a satisfactory timeframe. However, it a situation does develop where a consulting entity does not provide the required consultation and the alien's services are urgently needed, petitioners can request that the Service expedite the processing of the petition.

Thirteen commenters stated that service or management organizations should be considered the best source of information for petitioners seeking consultations. Forty-one commenters also suggested that service organizations should be able to compete in the consultation process. Management organizations can provide consultations with respect to O nonimmigrant petitions. However, with regard to P nonimmigrant petitions, the Act clearly requires that petitioners consult only with a labor organization. While petitioners for P nonimmigrant aliens may submit a consultation from a management or service organization in support of the petition, it is not required by the Act or regulation. Whether a service organization is, in fact, the best source of information concerning an alien's achievements in the field is a matter of conjecture.

The interim rule requires that petitions for O and P nonimmigrant aliens must be accompanied by a consultation for each separate occupation listed on the petition. For example, a petition for O–2 accompanying aliens may include a variety of difficult support people. Fourteen commenters stated that this requirement is burdensome and should be deleted. The Service will not adopt this suggestion as it uses the consultation process to obtain information on whether each occupation included on the petition is truly essential or critical to the principal alien or aliens. Without the consultation, the Service would not have sufficient information on which to make a proper decision on this issue.

The interim rule contains language that, if a petition is denied on the basis of an adverse consultation, the consultation should be attached to the Service's formal denial. Fifteen commenters objected to this provision noting that consultations are merely advisory in nature and should never be used as the sole basis for the Service's decision. The Service agrees with this comment and the language will be removed from the final rule. Petitions for O and P nonimmigrant aliens should be adjudicated on the total evidence presented by the petitioner. The consultation is just one piece of evidence which the Service reviews in its decision and, as noted by the commenters, is purely advisory in nature.

One commenter suggested that the consultation should focus entirely on the beneficiary and not the position. The Service does not agree with this comment. In adjudicating many O and P petitions, the Service is required to examine the proffered position to determine if the petition may be approved. The Service uses the information contained in the consultation in making this decision. For example, in the case of an O–1 nonimmigrant alien, the Service must examine the position to determine if the alien will be entering the United States to work in the area of his ability. Therefore, the suggestion will not be adopted.

Two commenters suggested that consulting entities should be notified of the Service's decision in a case in which the consulting entity provided a consultation. The Service has no objection to notifying the consulting entity of the outcome of a case in which it has provided a consultation and has instituted a mechanism to inform an entity of the outcome of a particular case. An entity which has provided a consultation in a particular case may attach to the petition a self-addressed post card. After the petition is adjudicated, the post card will be returned to the entity. It is the responsibility of the consulting entity to ensure that the post card is submitted to the Service. The Service will not become involved in disputes between a consulting entity and a petitioner regarding this process.

The interim rule contains a description of the procedure that the Service will use to obtain a consultation in a case determined to merit expeditious processing. The rule indicates that the Service will telephonically contact the consulting entity and request the consultation. A number of comments suggested that the Service should use facsimile capabilities in order to request the appropriate consultation in order to expedite the

process. As a result of this comment, the Service has amended this portion of the interim rule removing the reference to telephonic notification. Service Center Directors now have the discretion to contact the appropriate consulting entity utilizing the most expeditious method available.

Fifteen commenters stated that the consultation process may violate the Privacy Act since a consulting organization is often provided with personal information about both the petitioner and the beneficiary. The Privacy Act applies only to "individuals", which it defines as aliens lawfully admitted for permanent residence and U.S. citizens, 5 U.S.C. § 552(a)(1). Moreover, the Privacy Act only applies to records contained in a "system of records", (*i.e.*, records which the Service retrieves by use of an individual's name and other personal identifier). This situation does not exist in these circumstances.

The interim rule contained language that the Service would publish a list of consulting entities in its Operation Instructions. As a guide to further assist prospective petitioner, the Service will also publish a list in its Operations Instructions of those fields of endeavor where it has been determined that no consulting organization exists.

Periods of Admission

Fifty-two commenters suggested that the Service should grant longer periods of admission than are currently contained in the interim rule. The Service believes that the periods of admission for O and P nonimmigrants contained in the interim rule are reasonable and will not adopt this suggestion. The interim rule indicates that O–1 aliens may be admitted for the length of the event, not to exceed 3 years. A P nonimmigrant may be admitted for the length of the event, not to exceed 1 year. Of course, extensions of stay may be granted to complete the event or events. Except for P–1 athletes, there is no maximum period on the length of time that an O or P nonimmigrant may remain in the United States. However, it is rare that a P–1 entertainment group would need more than a year to complete an event or events. Most entertainment events are for shorter periods of time and O or P classification may not be granted to an alien merely to enter the United States to freelance and seek employment. The O or P nonimmigrant alien is admitted to the United States to perform in specific events as detailed on the initial petition.

The Service also realizes that the filing of extensions of stay is time-consuming. However, the Service uses the extension process as a mechanism of ensuring that the alien is complying with the terms of his or her initial admission.

Professional athletes may be initially admitted to the United States for 5 years and may obtain extensions of stay for an additional 5 years. However, the P–1 athlete's admission is also tied to a specific event such as a season, tournament, of the duration of the alien's contract.

Recording the Validity of Approved Petitions

Thirteen commenters suggested that the Service grant petitions retroactively. The Service will not adopt this suggestion since it serves no useful purpose. The vast majority of petitions are filed and approved prior to the actual date of the need for the alien's services. Petitioners are cautioned by the Service to file petitions well before the actual date of the need for the alien's services so that the alien can commence employment when the event begins. Since the Service has the capability to expedite the processing of an O or P petition in emergency situations, it is rare that the Service will adjudicate a petition after the event begins. To allow an alien to engage in employment prior to the approval of the petition would be contrary to the statute and would be in conflict with the employer sanctions provisions of the Act.

In order to accommodate scheduling problems caused by untimely adjudications, the final rule has been amended to allow Service Center Directors the discretion to approve a petition beyond the date requested by the petitioner if such additional time is needed to complete the event. The final rule now contains language that in those cases where the petition is approved after the date the event begins, the approval notice shall "generally show" the actual dates requested by the petitioner. This gives the Service the authority to approve a petition for a longer period of time than requested initially by the petitioner to complete the requested event when the approval of the petition is delayed through Service action or inaction.

Change of Nonimmigrant Status

Twenty-six commenters suggested that the regulations appear to preclude an O or P nonimmigrant from changing nonimmigrant classification in the United States. There is nothing in the final rule to preclude an O or P nonimmigrant alien from changing nonimmigrant classification pursuant to 8 CFR part 248.

Fees

Forty-nine commenters suggested that the filing fees for the I–129 are too high. The Service has conducted an extensive cost analysis study and determined that the filing fees for the petition are consistent with the Service's cost in adjudicating the petition. The fact that the Service's fees for the adjudication of a petition may be higher than those in other countries is not a relevant factor. The filing fee which the Service charges is designed to cover the cost of adjudication and was not designed to be competitive with fees charged in other countries.

Listing of Beneficiaries on Form I–797

Fifteen commenters noted that the approval notice, Form I–797, for O and P petitions contains only the name of one beneficiary even though the petition may relate to a group of individuals. These commenters suggested that the I–797 be altered to provide the names of all the beneficiaries listed on a petition.

Since publication of the interim rule, the Service has responded to comments relating to this issue and has begun to list more than one beneficiary on the approval notice.

Multiple Beneficiaries

The interim rule contained the requirement that if the beneficiaries of a petition were applying for visas at different consulates or, if visa exempt, at different Ports-of-Entry, separate petitions with fee must be filed for each consulate or Port-of-Entry. In order to streamline the petitioning process and cut costs for petitions involving groups, petitioners are now required to submit only one petition for the group regardless of where the beneficiaries will obtain their visas or apply for admission to the United States.

Documentary Requirements

Forty-one individuals stated that the documentary requirements for the O and P classification are too high. As previously stated, in drafting this rule, the Service has used the documentary requirements of the prior regulation where possible and has removed unnecessary requirements. Since the O and P classifications contain qualitative standards, the Service must require some sort of evidence to establish the beneficiary's eligibility. Based on this, the Service does not view the evidentiary criteria as being excessive.

Fourteen commenters stated that the Service should not require the submission of a contract in support of an O or P petition since not all contracts are written. The Service does not require the submission of written

contracts where they do not exist. The interim rule contains language providing that in the case of O petitions, in a situation where a written contract does not exist, a written summary of the terms of the oral agreement may be submitted. This provision was not included in the interim rule in the case of P petitions, but will be included in the final rule.

Filing of Petitions

The interim rule contained the provision that petitions for the H, O, and P nonimmigrant classifications shall be filed only at the three Service Centers which adjudicate these types of petitions, even in emergent circumstances. Seventy-four people commented on this provision, suggesting that the Service allow for emergent filings at local offices. The commenters indicated that this procedure would provide petitioners with an "escape-valve" to allow them to petition for aliens on short notice.

The Service proposed this provision to ensure that petitions would be adjudicated in a consistent fashion and to enable the Service to track the number of petitions filed for those nonimmigrant classifications which are subject to numerical limitations. The Service is aware that situations may develop which will necessitate the filing of petitions in emergent situations. However, it is believed that these petitions can be processed in acceptable timeframes at the Service Centers. The filing limitations are therefore retained in the final rule.

Sixteen commenters also suggested that the Service describe the emergent filing process for the Service Centers in the final rule. Pursuant to section 214(c)(6)(E) of the Act, the interim rule contains a description of the process that the Service will use in processing requests for expedited consultations. However, the Service does not believe that the final regulation is an appropriate forum to detail the actual filing or mailing process for each of the Service Centers. Each Service Center has already developed its own system for accepting these types of cases, a determination based upon local operating conditions. When these procedures are listed in a regulation, formal rulemaking is required to alter them. Since the procedures are dependent on local operating conditions, Service Center Directors need the flexibility to alter these procedures in a rapid fashion, which cannot be accomplished if the procedures are formally listed in a regulation.

Twenty-five commenters suggested that O and P beneficiaries be allowed to petition for themselves. The Service cannot adopt this suggestion since section 214(c) of the Act requires that O and P petitions be filed by an importing employer.

The interim rule also generated a great number of comments concerning the filing of petitions by agents. The Service adopted the provision permitting filing by agents in order to accommodate those situations where the beneficiary would be employed in numerous places by numerous employers. As currently written, the regulation allows established U.S. agents to file the petition at the agent's place of business and requires that only one petition be filed by the agent to cover all the proposed places of employment. It should be noted that the Act does not specifically provide for filing by agents but requires that petitions only be filed by an importing employer. However, section 214(c)(5)(B) indicates that agents may, in fact, file a petition, by discussing the issue of the joint liability of the petitioner and employer with respect to the alien's return transportation.

Twenty-six commenters suggested that the above-cited provision be expanded to allow foreign agents to file petitions. The Service is reluctant to expand this regulatory accommodation to foreign agents. There is no statutory support for such procedure, and the Service does not wish to expand the provision to foreign agents whose credentials may not be easily verifiable. Further, petitioners in the case of O and P petitions are liable for the alien beneficiary's return transportation abroad. The alien's ability to avail themselves of this provision could be reduced by the agent's foreign location.

Eighteen commenters suggested that agents should not be required to guarantee the beneficiary's wages. Although the interim rule does not contain such a requirement, language imposing such a requirement was included in the instructions to the December 11, 1991, edition of Form I-129. The language will be removed from the instructions to the form, as it contradicts the regulatory language.

Substitution of Beneficiaries

The interim rule provides that petitioners may substitute beneficiaries at consular offices for P-1 athletic teams, and P-2 and P-3 petitions involving groups. Forty-six commenters suggested that the interim rule be amended to allow for substitutions in the case of P-1 entertainment groups and for O-1 entertainers. The Service will adopt this suggestion in part. The final rule will be amended to allow for the substitution of beneficiaries in P-1 entertainment groups. However, since O-1 petitions relate to individual entertainers, substitutions in the case of O-1 beneficiaries will not be permitted A new petition will be required in the case of an O-1 petition.

The final rule specifically prohibits petitioners from substituting essential support personnel or O-2 accompanying aliens. The rationale for this policy is that the petitioner has already established to the Service that the essential support personnel or accompanying aliens initially included in the petition are integral and essential to the performance or have critical skills and experience with the principal alien or aliens. If these aliens can be substituted on short notice, their relationship to the principal alien or aliens cannot be considered significant.

Time Frames for Adjudications

Fourteen commenters suggested that the final rule provide a maximum timeframe for the adjudication of petitions. The Service believes that there is little to be gained by imposing a required processing time. As stated in the preamble to the interim rule, when local conditions at the Service Centers adversely affect the processing time, an artificially set time limit will do little to correct the situation. The Service is aware of the legitimacy of these concerns and will make every effort to process and adjudicate petitions in a timely manner. However, such management controls are more properly within the bounds of policy guidance and operating instructions rather than regulations.

180-Day Filing Window

The interim rule contains the requirement that petitions for O and P nonimmigrant aliens must be filed no more than 180 calendar days prior to the need for the alien's services. Twenty-seven commenters suggested that this restriction be removed.

The purpose of this restriction is to ensure orderly processing of petitions and to limit the number of amended petitions which might be necessitated if a petition is approved far in advance of the need for the beneficiary's services.

The 180-day rule as contained in the interim rule reflects a continuation of longstanding Service policy. Service experience indicates that the vast majority of petitions are normally filed within 30 to 60 days prior to the date of actual need. Very few petitions are filed earlier than 60 days and very seldom has a petitioner indicated a need

to file earlier than 180 days. As a result, the Service will not adopt this suggestion.

Revocation of Petitions

Twenty-four commenters suggested that petitions for O and P nonimmigrant aliens should not be revoked if the petitioner goes out of business since many petitions are filed by agents, not the alien's employer. The Service agrees with this suggestion and the final rule will contain the provision that petitions filed by agents shall not be revoked if the agent goes out of business. However, the Service retains the authority to revoke the petition if the actual employer goes out of business.

Employment Prior to Validity of The Petition

The interim regulations contain the provision that an O or P nonimmigrant may be admitted ten days prior to the validity of the petition and for ten days after the validity of the petition. During this period of time, the alien is not permitted to engage in employment. Fourteen commenters object to this provision stating that the alien should be granted employment authorization during these two periods of time. The Service does not wish to adopt this suggestion since the employment in the O or P classification is, according to the Act, specific to an event. The O and P category may not be used by an alien to freelance and seek employment in the U.S. labor market without prior Service approval. This procedure was incorporated in the regulation in order to provide additional time to the alien or aliens to make arrangements and to prepare for the events or activities covered by the petition. If more time is required by the petitioner to complete the event, the petitioner may file a request for a petition extension and an extension of the alien's temporary stay.

Return Transportation Provision

The Act requires that a petitioner must provide assurance that the alien's or aliens' return transportation will be provided. One commenter suggested that petitioners should be required to submit a bond with the petition in order to establish that the return transportation requirement will be met. The Service does not wish to require petitioners to submit any more paperwork than is absolutely required. Further, the administrative cost of posting and processing bonds would be high resulting, possibly, in higher processing fees for petitions. As a result, the Service will not adopt this suggestion. The filing of the petition is sufficient assurance to the Service that this requirement has been met.

Regulatory Flexibility Act

The Commissioner of the Immigration and Naturalization Service, in accordance with the Regulatory Flexibility Act (5 U.S.C. 605(b)), has reviewed this regulation and by approving it certifies that the rule will not have a significant economic impact on a substantial number of small entities. The regulation merely modifies certain filing procedures for petitions under the H, O, and P nonimmigrant classifications and does not dramatically alter existing filing procedures.

Executive Order 12866

This rule has been drafted and reviewed in accordance with the statement of regulatory philosophy and principals of regulation in Section 1 of Executive Order 12866. The Department of Justice, Immigration and Naturalization Service, has determined that this rule is a "significant regulatory action" and accordingly it has been reviewed by the Office of Management and Budget pursuant to Executive Order 12866.

Executive Order 12612

This regulation will not have substantial direct effects on the States, on the relationship between the national government and the States, or on the distribution of power and responsibilities among the various levels of government. Therefore, in accordance with Executive Order 12612, it is determined that this rule does not have sufficient federalism implications to warrant the preparation of a Federalism Assessment.

Executive Order 12606

The Commissioner of the Immigration and Naturalization Service certifies that she has addressed this rule in light of the criteria in Executive Order 12606 and has determined that it will have no effect on family well-being.

List of Subjects in 8 CFR Part 214

Administrative practice and procedure, Aliens, Authority delegation (Government agencies), Employment, Organization and functions (Government agencies), Passports and visas.

Accordingly, part 214 of chapter I of Title 8 of the Code of Federal Regulations is amended as follows:

PART 214—NONIMMIGRANT CLASSES

1. The authority citation for part 214 continues to read as follows:

Authority: 8 U.S.C. 1101, 1103, 1182, 1184, 1186a, 1221, 1281, 1282; 8 CFR part 2.

2. Section 214.2 is amended by revising paragraph (h)(4)(vii)(C) to read as follows:

§ 214.2 Special requirements for admission, extension, and maintenance of status.

* * * * *

(h) * * *

(4) * * *

(vii) * * *

(C) *Beneficiary's requirements.* A petitioner may establish that a beneficiary is a fashion model of distinguished merit and ability by the submission of two of the following forms of documentation showing that the alien:

(*1*) Has achieved national or international recognition and acclaim for outstanding achievement in his or her field as evidenced by reviews in major newspapers, trade journals, magazines, or other published material;

(*2*) Has performed and will perform services as a fashion model for employers with a distinguished reputation;

(*3*) Has received recognition for significant achievements from organizations, critics, fashion houses, modeling agencies, or other recognized experts in the field; or

(*4*) Commands a high salary or other substantial remuneration for services evidenced by contracts or other reliable evidence.

* * * * *

3. In § 214.2 paragraphs (o) and (p) are revised to read as follows:

§ 214.2 Special requirements for admission, extension, and maintenance of status.

* * * * *

(o) *Aliens of extraordinary ability or achievement.*—(1) *Classifications.*—(i) *General.* Under section 101(a)(15)(O) of the Act, a qualified alien may be authorized to come to the United States to perform services relating to an event or events if petitioned for by an employer. Under this nonimmigrant category, the alien may be classified under section 101(a)(15)(O)(i) of the Act as an alien who has extraordinary ability in the sciences, arts, education, business, or athletics, or who has a demonstrated record of extraordinary achievement in the motion picture or television industry. Under section 101(a)(15)(O)(ii) of the Act, an alien having a residence in a foreign country which he or she has no intention of abandoning may be classified as an accompanying alien who is coming to assist in the artistic or athletic

performance of an alien admitted under section 101(a)(15)(O)(i) of the Act. The spouse or child of an alien described in section 101(a)(15)(O)(i) or (ii) of the Act who is accompanying or following to join the alien is entitled to classification pursuant to section 101(a)(15)(O)(iii) of the Act. These classifications are called the O–1, O–2, and O–3 categories, respectively. The petitioner must file a petition with the Service for a determination of the alien's eligibility for O–1 or O–2 classification before the alien may apply for a visa or seek admission to the United States. This paragraph sets forth the standards and procedures applicable to these classifications.

(ii) *Description of classifications.*—(A) An O–1 classification applies to:

(1) An individual alien who has extraordinary ability in the sciences, arts, education, business, or athletics which has been demonstrated by sustained national or international acclaim and who is coming temporarily to the United States to continue work in the area of extraordinary ability; or

(2) An alien who has a demonstrated record of extraordinary achievement in motion picture and/or television productions and who is coming temporarily to the United States to continue work in the area of extraordinary achievement.

(B) An O–2 classification applies to an accompanying alien who is coming temporarily to the United States solely to assist in the artistic or athletic performance by an O–1. The O–2 alien must:

(1) Be an integral part of the actual performances or events and posses critical skills and experience with the O–1 alien that are not of a general nature and which are not possessed by others; or

(2) In the case of a motion picture or television production, have skills and experience with the O–1 alien which are not of a general nature and which are critical, either based on a pre-existing and longstanding working relationship or, if in connection with a specific production only, because significant production (including pre- and post-production) will take place both inside and outside the United States and the continuing participation of the alien is essential to the successful completion of the production.

(2) *Filing of petitions.*—(i)—*General.* A petitioner seeking to classify an alien as an O–1 or O–2 shall file a petition on Form I–129, Petition for Nonimmigrant Worker, only with the Service Center which has jurisdiction in the area where the alien will work. The petition may not be filed more than six months before the actual need for the alien's services. An O–1 or O–2 petition will be adjudicated at the appropriate Service Center, even in emergent situations. Only one beneficiary may be included on an O–1 petition. The O–2 aliens must be filed for on a separate petition from the O–1 alien. An O–1 or O–2 petition may be filed by a U.S. employer, a foreign employer, or an established U.S. agent. An O alien may not petition for himself or herself.

(ii) *Evidence required to accompany a petition.* Petitions for O aliens shall be accompanied by the following:

(A) The evidence specified in the particular section for the classification;

(B) Copies of any written contracts between the petitioner and the alien beneficiary or, if there is no written contract, a summary of the terms of the oral agreement under which the alien will be employed;

(C) An explanation of the nature of the events or activities, the beginning and ending dates for the events or activities, and a copy of any itinerary for the events or activities; and

(D) A written advisory opinion(s) from the appropriate consulting entity or entities.

(iii) *Form of documentation.* The evidence submitted with an O petition shall conform to the following:

(A) Affidavits, contracts, awards, and similar documentation must reflect the nature of the alien's achievement and be executed by an officer or responsible person employed by the institution, firm, establishment, or organization where the work was performed.

(B) Affidavits written by present or former employers or recognized experts certifying to the recognition and extraordinary ability, or in the case of a motion picture or television production, the extraordinary achievement of the alien, shall specifically describe the alien's recognition and ability or achievement in factual terms and set forth the expertise of the affiant and the manner in which the affiant acquired such information.

(C) A legible photocopy of a document in support of the petition may be submitted in lieu of the original. However, the original document shall be submitted if requested by the Director.

(iv) *Other filing situations.*—(A) *Services in more than one location.* A petition which requires the alien to work in more than one location must include an itinerary with the dates and locations of work and must be filed with the Service Center which has jurisdiction in the area where the petitioner is located. The address which the petitioner specifies as its location on the petition shall be where the petitioner is located for purposes of this paragraph. If the petitioner is a foreign employer with no United States location, the petition shall be filed with the Service Center having jurisdiction over the area where the work will begin.

(B) *Services for more than one employer.* If the beneficiary will work concurrently for more than one employer within the same time period, each employer must file a separate petition with the Service Center that has jurisdiction over the area where the alien will perform services, unless an established agent files the petition.

(C) *Change of employer.* If an O–1 or O–2 alien in the United States seeks to change employers, the new employer must file a petition and a request to extend the alien's stay with the Service Center having jurisdiction over the new place of employment. An O–2 alien may change employers only in conjunction with a change of employers by the principal O–1 alien. If the O–1 or O–2 petition was filed by an agent, an amended petition must be filed with evidence relating to the new employer and a request for an extension of stay.

(D) *Amended petition.* The petitioner shall file an amended petition on Form I–129, with fee, with the Service Center where the original petition was filed to reflect any material changes in the terms and conditions of employment or the beneficiary's eligibility as specified in the original approved petition. In the case of a petition filed for an artist or entertainer, a petitioner may add additional performances or engagements during the validity period of the petition without filing an amended petition, provided the additional performances or engagements require an alien of O–1 caliber.

(E) *Agents as petitioners.* An established United States agent may file a petition in cases involving an alien who is traditionally self-employed or uses agents to arrange short-term employment in his or her behalf with numerous employers, and in cases where a foreign employer authorizes the agent to act in its behalf. A petition filed by an agent is subject to the following conditions:

(1) A person or company in business as an agent may file the petition involving multiple employers as the representative of both the employers and the beneficiary, if the supporting documentation includes a complete itinerary of the event or events. The itinerary must specify the dates of each service or engagement, the names and addresses of the actual employers, and the names and addresses of the establishments, venues, or locations where the services will be performed. A

contract between the employers and the beneficiary is required. The burden is on the agent to explain the terms and conditions of the employment and to provide any required documentation.

(*2*) An agent performing the function of an employer must provide the contractual agreement between the agent and the beneficiary which specifies the wage offered and the other terms and conditions of employment of the beneficiary.

(F) *Multiple beneficiaries.* More than one O–2 accompanying alien may be included on a petition if they are assisting the same O–1 alien for the same events or performances, during the same period of time, and in the same location.

(3) *Petition for alien of extraordinary ability or achievement (O–1).*—(i) *General.* Extraordinary ability in the sciences, arts, education, business, or athletics, or extraordinary achievement in the case of an alien in the motion picture or television industry, must be established for an individual alien. An O–1 petition must be accompanied by evidence that the work which the alien is coming to the United States to continue is in the area of extraordinary ability, and that the alien meets the criteria in paragraph (o)(3)(iii) or (iv) of this section.

(ii) *Definitions.* As used in this paragraph, the term:

Arts includes any field of creative activity or endeavor such as, but not limited to, fine arts, visual arts, culinary arts, and performing arts. Aliens engaged in the field of arts include not only the principal creators and performers but other essential persons such as, but not limited to, directors, set designers, lighting designers, sound designers, choreographers, choreologists, conductors, orchestrators, coaches, arrangers, musical supervisors, costume designers, makeup artists, flight masters, stage technicians, and animal trainers.

Event means an activity such as, but not limited to, a scientific project, conference, convention, lecture series, tour, exhibit, business project, academic year, or engagement. Such activity may include short vacations, promotional appearances, and stopovers which are incidental and/or related to the event. A group of related activities may also be considered to be an event. In the case of an O–1 athlete, the event could be the alien's contract.

Extraordinary ability in the field of arts means distinction. Distinction means a high level of achievement in the field of arts evidenced by a degree of skill and recognition substantially above that ordinarily encountered to the extent that a person described as prominent is renowned, leading, or well-known in the field of arts.

Extraordinary ability in the field of science, education, business, or athletics means a level of expertise indicating that the person is one of the small percentage who have arisen to the very top of the field of endeavor.

Extraordinary achievement with respect to motion picture and television productions, as commonly defined in the industry, means a very high level of accomplishment in the motion picture or television industry evidenced by a degree of skill and recognition significantly above that ordinarily encountered to the extent that the person is recognized as outstanding, notable, or leading in the motion picture or television field.

Peer group means a group or organization which is comprised of practitioners of the alien's occupation. If there is a collective bargaining representative of an employer's employees in the occupational classification for which the alien is being sought, such a representative may be considered the appropriate peer group for purposes of consultation.

(iii) *Evidentiary criteria for an O–1 alien of extraordinary ability in the fields of science, education, business, or athletics.* An alien of extraordinary ability in the fields of science, education, business, or athletics must demonstrate sustained national or international acclaim and recognition for achievements in the field of expertise by providing evidence of:

(A) Receipt of a major, internationally recognized award, such as the Nobel Prize; or

(B) At least three of the following forms of documentation:

(*1*) Documentation of the alien's receipt of nationally or internationally recognized prizes or awards for excellence in the field of endeavor;

(*2*) Documentation of the alien's membership in associations in the field for which classification is sought, which require outstanding achievements of their members, as judged by recognized national or international experts in their disciplines or fields;

(*3*) Published material in professional or major trade publications or major media about the alien, relating to the alien's work in the field for which classification is sought, which shall include the title, date, and author of such published material, and any necessary translation;

(*4*) Evidence of the alien's participation on a panel, or individually, as a judge of the work of others in the same or in an allied field of specialization to that for which classification is sought;

(*5*) Evidence of the alien's original scientific, scholarly, or business-related contributions of major significance in the field;

(*6*) Evidence of the alien's authorship of scholarly articles in the field, in professional journals, or other major media;

(*7*) Evidence that the alien has been employed in a critical or essential capacity for organizations and establishments that have a distinguished reputation;

(*8*) Evidence that the alien has either commanded a high salary or will command a high salary or other remuneration for services, evidenced by contracts or other reliable evidence.

(C) If the criteria in paragraph (o)(3)(iii) of this section do not readily apply to the beneficiary's occupation, the petitioner may submit comparable evidence in order to establish the beneficiary's eligibility.

(iv) *Evidentiary criteria for an O–1 alien of extraordinary ability in the arts.* To qualify as an alien of extraordinary ability in the field of arts, the alien must be recognized as being prominent in his or her field of endeavor as demonstrated by the following:

(A) Evidence that the alien has been nominated for, or has been the recipient of, significant national or international awards or prizes in the particular field such as an Academy Award, an Emmy, a Grammy, or a Director's Guild Award; or

(B) At least three of the following forms of documentation:

(*1*) Evidence that the alien has performed, and will perform, services as a lead or starring participant in productions or events which have a distinguished reputation as evidenced by critical reviews, advertisements, publicity releases, publications contracts, or endorsements;

(*2*) Evidence that the alien has achieved national or international recognition for achievements evidenced by critical reviews or other published materials by or about the individual in major newspapers, trade journals, magazines, or other publications;

(*3*) Evidence that the alien has performed, and will perform, in a lead, starring, or critical role for organizations and establishments that have a distinguished reputation evidenced by articles in newspapers, trade journals, publications, or testimonials;

(*4*) Evidence that the alien has a record of major commercial or critically acclaimed successes as evidenced by such indicators as title, rating, standing in the field, box office receipts, motion

pictures or television ratings, and other occupational achievements reported in trade journals, major newspapers, or other publications;

(5) Evidence that the alien has received significant recognition for achievements from organizations, critics, government agencies, or other recognized experts in the field in which the alien is engaged. Such testimonials must be in a form which clearly indicates the author's authority, expertise, and knowledge of the alien's achievements; or

(6) Evidence that the alien has either commanded a high salary or will command a high salary or other substantial remuneration for services in relation to others in the field, as evidenced by contracts or other reliable evidence; or

(C) If the criteria in paragraph (o)(3)(iv) of this section do not readily apply to the beneficiary's occupation, the petitioner may submit comparable evidence in order to establish the beneficiary's eligibility.

(v) *Evidentiary criteria for an alien of extraordinary achievement in the motion picture or television industry.* To qualify as an alien of extraordinary achievement in the motion picture or television industry, the alien must be recognized as having a demonstrated record of extraordinary achievement as evidenced by the following:

(A) Evidence that the alien has been nominated for, or has been the recipient of, significant national or international awards or prizes in the particular field such as an Academy Award, an Emmy, a Grammy, or a Director's Guild Award; or

(B) At least three of the following forms of documentation:

(1) Evidence that the alien has performed, and will perform, services as a lead or starring participant in productions or events which have a distinguished reputation as evidenced by critical reviews, advertisements, publicity releases, publications contracts, or endorsements;

(2) Evidence that the alien has achieved national or international recognition for achievements evidenced by critical reviews or other published materials by or about the individual in major newspapers, trade journals, magazines, or other publications;

(3) Evidence that the alien has performed, and will perform, in a lead, starring, or critical role for organizations and establishments that have a distinguished reputation evidenced by articles in newspapers, trade journals, publications, or testimonials;

(4) Evidence that the alien has a record of major commercial or critically acclaimed successes as evidenced by such indicators as title, rating, standing in the field, box office receipts, motion picture or television ratings, and other occupational achievements reported in trade journals, major newspapers, or other publications;

(5) Evidence that the alien has received significant recognition for achievements from organizations, critics, government agencies, or other recognized experts in the field in which the alien is engaged. Such testimonials must be in a form which clearly indicates the author's authority, expertise, and knowledge of the alien's achievements; or

(6) Evidence that the alien has either commanded a high salary or will command a high salary or other substantial remuneration for services in relation to other in the field, as evidenced by contracts or other reliable evidence.

(4) *Petition for an O–2 accompanying alien.*—(i) *General.* An O–2 accompanying alien provides essential support to an O–1 artist or athlete. Such aliens may not accompany O–1 aliens in the fields of science, business, or education. Although the O–2 alien must obtain his or her own classification, this classification does not entitle him or her to work separate and apart from the O–1 alien to whom he or she provides support. An O–2 alien must be petitioned for in conjunction with the services of the O–1 alien.

(ii) *Evidentiary criteria for qualifying as an O–2 accompanying alien.*— (A) *Alien accompanying an O–1 artist or athlete of extraordinary ability.* To qualify as an O–2 accompanying alien, the alien must be coming to the United States to assist in the performance of the O–1 alien, be an integral part of the actual performance, and have critical skills and experience with the O–1 alien which are not of a general nature and which are not possessed by a U.S. worker.

(B) *Alien accompanying an O–1 alien of extraordinary achievement.* To qualify as an O–2 alien accompanying and O–1 alien involved in a motion picture or television production, the alien must have skills and experience with the O–1 alien which are not of a general nature and which are critical based on a pre-existing longstanding working relationship or, with respect to the specific production, because significant production (including pre- and post-production work) will take place both inside and outside the United States and the continuing participation of the alien is essential to the successful completion of the production.

(C) The evidence shall establish the current essentiality, critical skills, and experience of the O–2 alien with the O–1 alien and that the alien has substantial experience performing the critical skills and essential support services for the O–1 alien. In the case of a specific motion picture or television production, the evidence shall establish that significant production has taken place outside the United States, and will take place inside the United States, and that the continuing participation of the alien is essential to the successful completion of the production.

(5) *Consultation.*—(i) *General.*—(A) Consultation with an appropriate U.S. peer group (which could include a person or persons with expertise in the field), labor and/or management organization regarding the nature of the work to be done and the alien's qualifications is mandatory before a petition for an O–1 or O–2 classification can be approved.

(B) Except as provided in paragraph (o)(5)(i)(E) of this section, evidence of consultation shall be in the form of a written advisory opinion from a peer group (which could include a person or persons with expertise in the field), labor and/or management organization with expertise in the specific field involved.

(C) Except as provided in paragraph (o)(5)(i)(E) of this section, the petitioner shall obtain a written advisory opinion from a peer group (which could include a person or persons with expertise in the field), labor, and/or management organization with expertise in the specific field involved. The advisory opinion shall be submitted along with the petition when the petition is filed. If the advisory opinion is not favorable to the petitioner, the advisory opinion must set forth a specific statement of facts which supports the conclusion reached in the opinion. Advisory opinions must be submitted in writing and must be signed by an authorized official of the group or organization.

(D) Except as provided in paragraph (o)(5)(i)(E) and (G) of this section, written evidence of consultation shall be included in the record in every approved O petition. Consultations are advisory and are not binding on the Service.

(E) In a case where the alien will be employed in the field of arts, entertainment, or athletics, and the Service has determined that a petition merits expeditious handling, the Service shall contact the appropriate labor and/or management organization and request an advisory opinion if one is not submitted by the petitioner. The labor and/or management organization shall

have 24 hours to respond to the Service's request. The Service shall adjudicate the petition after receipt of the response from the consulting organization. The labor and/or management organization shall then furnish the Service with a written advisory opinion within 5 days of the initiating request. If the labor and/or management organization fails to respond within 24 hours, the Service shall render a decision on the petition without the advisory opinion.

(F) In a routine processing case where the petition is accompanied by a written opinion from a peer group, but the peer group is not a labor organization, the Director will forward a copy of the petition and all supporting documentation to the national office of the appropriate labor organization within 5 days of receipt of the petition. If there is a collective bargaining representative of an employer's employees in the occupational classification for which the alien is being sought, that representative shall be the appropriate labor organization for purposes of this section. The labor organization will then have 15 days from receipt of the petition and supporting documents to submit to the Service a written advisory opinion, comment, or letter of no objection. Once the 15-day period has expired, the Director shall adjudicate the petition in no more than 14 days. The Director may shorten this time in his or her discretion for emergency reasons, if no unreasonable burden would be imposed on any participant in the process. If the labor organization does not respond within 15 days, the Director will render a decision on the record without the advisory opinion.

(G) In those cases where it is established by the petitioner that an appropriate peer group, including a labor organization, does not exist, the Service shall render a decision on the evidence of record.

(ii) *Consultation requirements for an O–1 alien for extraordinary ability.*—(A) *Content.* Consultation with a peer group in the area of the alien's ability (which may include a labor organization), or a person or persons with expertise in the area of the alien's ability, is required in an O–1 petition for an alien of extraordinary ability. If the advisory opinion is not favorable to the petitioner, the advisory opinion must set forth a specific statement of facts which supports the conclusion reached in the opinion. If the advisory opinion is favorable to the petitioner, it should describe the alien's ability and achievements in the field of endeavor, describe the nature of the duties to be performed, and state whether the position requires the services of an alien of extraordinary ability. A consulting organization may also submit a letter of no objection in lieu of the above if it has no objection to the approval of the petition.

(B) *Waiver of consultation of certain aliens of extraordinary ability in the field of arts.* Consultation for an alien of extraordinary ability in the field of arts shall be waived by the Director in those instances where the alien seeks readmission to the United States to perform similar services within 2 years of the date of a previous consultation. The director shall, within 5 days of granting the waiver, forward a copy of the petition and supporting documentation to the national office of an appropriate labor organization. Petitioners desiring to avail themselves of the waiver should submit a copy of the prior consultation with the petition and advise the Director of the waiver request.

(iii) *Consultation requirements for an O–1 alien of extraordinary achievement.* In the case of an alien of extraordinary achievement who will be working on a motion picture or television production, consultation shall be made with the appropriate union representing the alien's occupational peers and a management organization in the area of the alien's ability. If an advisory opinion is not favorable to the petitioner, the advisory opinion must set forth a specific statement of facts which supports the conclusion reached in the opinion. If the advisory opinion is favorable to the petitioner, the written advisory opinion from the labor and management organizations should describe the alien's achievements in the motion picture or television field and state whether the position requires the services of an alien of extraordinary achievement. If a consulting organization has no objection to the approval of the petition, the organization may submit a letter of no objection in lieu of the above.

(iv) *Consultation requirements for an O–2 accompanying alien.* Consultation with a labor organization with expertise in the skill area involved is required for an O–2 alien accompanying an O–1 alien of extraordinary ability. In the case of an O–2 alien seeking entry for a motion picture or television production, consultation with a labor organization and a management organization in the area of the alien's ability is required. If an advisory opinion is not favorable to the petitioner, the advisory opinion must set forth a specific statement of facts which supports the conclusion reached in the opinion. If the advisory opinion is favorable to the petitioner, the opinion provided by the labor and/or management organization should describe the alien's essentiality to, and working relationship with, the O–1 artist or athlete and state whether there are available U.S. workers who can perform the support services. If the alien will accompany an O–1 alien involved in a motion picture or television production, the advisory opinion should address the alien's skills and experience wit the O–1 alien and whether the alien has a pre-existing longstanding working relationship with the O–1 alien, or whether significant production will take place in the United States and abroad and if the continuing participation of the alien is essential to the successful completion of the production. A consulting organization may also submit a letter of no objection in lieu of the above if it has no objection to the approval of the petition.

(v) *Organizations agreeing to provide advisory opinions.* The Service will list in its Operations Instructions for O classification those peer groups, labor organizations, and/or management organizations which have agreed to provide advisory opinions to the Service and/or petitioners. The list will not be an exclusive or exhaustive list. The Service and petitioners may use other sources, such as publications, to identify appropriate peer groups, labor organizations, and management organizations. Additionally, the Service will list in its Operations Instructions those occupations or fields of endeavor where the nonexistence of an appropriate consulting entity has been verified.

(6) *Approval and validity of petition.*—(1) *Approval.* The Director shall consider all of the evidence submitted and such other evidence as may be independently required to assist in the adjudication. The Director shall notify the petitioner of the approval of the petition on Form I–797, Notice of Action. The approval notice shall include the alien beneficiary name, the classification, and the petition's period of validity.

(ii) *Recording the validity of petitions.* Procedures for recording the validity period of petitions are as follows:

(A) If a new O petition is approved before the date the petitioner indicates the services will begin, the approved petition and approval notice shall show the actual dates requested by the petitioner, not to exceed the limit specified by paragraph (o)(6)(iii) of this section or other Service policy.

(B) If a new O petition is approved after the date the petitioner indicates the services will begin, the approved

petition and approval notice shall generally show a validity period commencing with the date of approval and ending with the date requested by the petitioner, not to exceed the limit specified by paragraph (o)(6)(iii) of this section or other Service policy.

(C) If the period of services requested by the petitioner exceeds the limit specified in paragraph (o)(6)(iii) of this section, the petition shall be approved only up to the limit specified in that paragraph.

(iii) *Validity.*—(A) *O–1 petition.* An approved petition for an alien classified under section 101(a)(15)(O)(i) of the Act shall be valid for a period of time determined by the Director to be necessary to accomplish the event or activity, not to exceed 3 years.

(B) *O–2 petition.* An approved petition for an alien classified under section 101(a)(15)(O)(ii) of the Act shall be valid for a period of time determined to be necessary to assist the O–1 alien to accomplish the event or activity, not to exceed 3 years.

(iv) *Spouse and dependents.* The spouse and unmarried minor children of the O–1 or O–2 alien beneficiary are entitled to O–3 nonimmigrant classification, subject to the same period of admission and limitations as the alien beneficiary, if they are accompanying or following to join the alien beneficiary in the United States. Neither the spouse nor a child of the alien beneficiary may accept employment unless he or she has been granted employment authorization.

(7) *Denial of petition.*—(i) *Notice of intent to deny.* When an adverse decision is proposed on the basis of derogatory information of which the petitioner is unaware, the Director shall notify the petitioner of the intent to deny the petition and the basis for the denial. The petitioner may inspect and rebut the evidence and will be granted a period of 30 days from the date of the notice in which to do so. All relevant rebuttal material will be considered in making a final decision.

(ii) *Notice of denial.* The petitioner shall be notified of the decision, the reasons for the denial, and the right to appeal the denial under 8 CFR part 103.

(8) *Revocation of approval of petition.*—(i) *General.* (A) The petitioner shall immediately notify the Service of any changes in the terms and conditions of employment of a beneficiary which may affect eligibility under section 101(a)(15)(O) of the Act and paragraph (o) of this section. An amended petition should be filed when the petitioner continues to employ the beneficiary. If the petitioner no longer employs the beneficiary, the petitioner shall send a letter explaining the change(s) to the Director who approved the petition.

(B) The Director may revoke a petition at any time, even after the validity of the petition has expired.

(ii) *Automatic revocation.* The approval of an unexpired petition is automatically revoked if the petitioner, or the named employer in a petition filed by an agent, goes out of business, files a written withdrawal of the petition, or notifies the Service that the beneficiary is no longer employed by the practitioner.

(iii) *Revocation on notice.*—(A) *Grounds for revocation.* The Director shall send to the petitioner a notice of intent to revoke the petition in relevant part if is determined that:

(*1*) The beneficiary is no longer employed by the petitioner in the capacity specified in the petition;

(*2*) The statement of facts contained in the petition was not true and correct;

(*3*) The petitioner violated the terms or conditions of the approved petition;

(*4*) The petitioner violated the requirements of section 101(a)(15)(O) of the Act or paragraph (o) of this section; or

(*5*) The approval of the petition violated paragraph (o) of this section or involved gross error.

(B) *Notice and decision.* The notice of intent to revoke shall contain a detailed statement of the grounds for the revocation and the time period allowed for the petitioner's rebuttal. The petitioner may submit evidence in rebuttal within 30 days of the date of the notice. The Director shall consider all relevant evidence presented in deciding whether to revoke the petition.

(9) *Appeal of a denial or a revocation of a petition.*—(i) *Denial.* A denied petition may be appealed under 8 CFR part 103.

(ii) *Revocation.* A petition that has been revoked on notice may be appealed under 8 CFR part 103. Automatic revocations may not be appealed.

(10) *Admission.* A beneficiary may be admitted to the United States for the validity period of the petition, plus a period of up to 10 days before the validity period begins and 10 days after the validity period ends. The beneficiary may only engage in employment during the validity period of the petition.

(11) *Extention of visa petition validity.* The petitioner shall file a request to extend the validity of the original petition under section 101(a)(15)(O) of the Act on Form I–129, Petition for a Nonimmigrant Worker, in order to continue or complete the same activities or events specified in the original petition. Supporting documents are not required unless requested by the Director. A petition extension may be filed only if the validity of the original petition has not expired.

(12) *Extension of stay.*—(i) *Extension procedure.* The petitioner shall request extension of the alien's stay to continue or complete the same event or activity by filing Form I–129, accompanied by a statement explaining the reasons for the extension. The petitioner must also request a petition extension. The dates of extension shall be the same for the petition and the beneficiary's extension of stay. The alien beneficiary must be physically present in the United States at the time of filing of the extension of stay. Even though the request to extend the petition and the alien's stay are combined on the petition, the Director shall make a separate determination on each. If the alien leaves the United States for business or personal reasons while the extension requests are pending, the petitioner may request the Director to cable notification of approval of the petition extension to the consular office abroad where the alien will apply for a visa.

(ii) *Extension period.* An extension of stay may be authorized in increments of up to 1 year for an O–1 or O–2 beneficiary to continue or complete the same event or activity for which he or she was admitted plus an additional 10 days to allow the beneficiary to get his or her personal affairs in order.

(iii) *Denial of an extension of stay.* The denial of the request for the alien's extension of temporary stay may not be appealed.

(13) *Effect of approval of a permanent labor certification or filing of a preference petition on O classification.* The approval of a permanent labor certification or the filing of a preference petition for an alien shall not be a basis for denying an O–1 petition, a request to extend such a petition, or the alien's application for admission, change of status, or extension of stay. The alien may legitimately come to the United States for a temporary period as an O–1 nonimmigrant and depart voluntarily at the end of his or her authorized stay and, at the same time, lawfully seek to become a permanent resident of the United States.

(14) *Effect of a strike.*—(i) If the Secretary of Labor certifies to the Commissioner that a strike or other labor dispute involving a work stoppage of workers is in progress in the occupation at the place where the beneficiary is to be employed, and that the employment of the beneficiary would adversely affect the wages and working conditions of U.S. citizens and lawful resident workers:

(A) A petition to classify an alien as a nonimmigrant as defined in section 101(a)(15)(O) of the Act shall be denied; or

(B) If a petition has been approved, but the alien has not yet entered the United States, or has entered the United States but has not commenced employment, the approval of the petition is automatically suspended, and the application for admission on the basis of the petition shall be denied.

(ii) If there is a strike or other labor dispute involving a work stoppage of workers in progress, but such strike or other labor dispute is not certified under paragraph (o)(14)(i) of this section, the Commissioner shall not deny a petition or suspend an approved petition.

(iii) If the alien has already commenced employment in the United States under an approved petition and is participating in a strike or labor dispute involving a work stoppage of workers, whether or not such strike or other labor dispute has been certified by the Secretary of Labor, the alien shall not be deemed to be failing to maintain his or her status solely on account of past, present, or future participation in a strike or other labor dispute involving a work stoppage of workers but is subject to the following terms and conditions:

(A) The alien shall remain subject to all applicable provisions of the Immigration and Nationality Act and regulations promulgated thereunder in the same manner as are all other O nonimmigrants;

(B) The status and authorized period of stay of such an alien is not modified or extended in any way by virtue of his or her participation in a strike or other labor dispute involving a work stoppage of workers; and

(C) Although participation by an O nonimmigrant alien in a strike or other labor dispute involving a work stoppage of workers will not constitute a ground for deportation, and alien who violates his or her status or who remains in the United States after his or her authorized period of stay has expired will be subject to deportation.

(15) *Use of approval notice, Form I-797.* The Service shall notify the petitioner of Form I-797 whenever a visa petition or an extension of a visa petition is approved under the O classification. The beneficiary of an O petition who does not require a nonimmigrant visa may present a copy of the approval notice at a Port-of-Entry to facilitate entry into the United States. A beneficiary who is required to present a visa for admission, and who visa will have expired before the date of his or her intended return, may use Form I-797 to apply for a new or revalidated visa during the validity period of the petition. A copy of Form I-797 shall be retained by the beneficiary and presented during the validity of the petition when reentering the United States to resume the same employment with the same petitioner.

(16) *Return transportation requirement.* In the case of an alien who enters the United States under section 101(a)(15(O) of the Act and whose employment terminates for reasons other than voluntary resignation, the employer whose offer of employment formed the basis of such nonimmigrant status and the petitioner are jointly and severally liable for the reasonable cost of return transportation of the alien abroad. For the purposes of this paragraph, the term "abroad" means the alien's last place of residence prior to his or her entry into the United States.

(p) *Artists, athletes, and entertainers*—(1) *Classifications.*—(i) *General.* Under section 101(a)(15)(P) of the Act, an alien having a residence in a foreign country which he or she has not intention or abandoning may be authorized to come to the United States temporarily to perform services for an employer or a sponsor. Under the nonimmigrant category, the alien may be classified under section 101(a)(15)(P)(i) of the Act as an alien who is coming to the United States to perform services as an internationally recognized athlete, individually or as part of a group or team, or member of an internationally recognized entertainment group; under section 101(a)(15)(P)(ii) of the Act, who is coming to perform as an artist or entertainer under a reciprocal exchange program; under section 101(a)(15)(P)(iii) of the Act, as an alien who is coming solely to perform, teach, or coach under a program that is culturally unique; or under section 101(a)(15)(P)(iv) of the Act, as the spouse or child of an alien described in section 101(a)(15)(P) (i), (ii), or (iii) of the Act who is accompanying or following to join the alien. These classifications are called P-1, P-2, P-3, and P-4 respectively. The employer or sponsor must file a petition with the Service for review of the services to be performed and for determination of the alien's eligibility for P-1, P-2, or P-3 classification before the alien may apply for a visa or seek admission to the United States. This paragraph sets forth the standards and procedures applicable to these classifications.

(ii) *Description of classification*—(A) A P-1 classification applies to an alien who is coming temporarily to the United States:

(*1*) To perform at specific athletic competition as an athlete, individually or as part of a group or team, at an internationally recognized level or performance, or

(*2*) To perform with, or as an integral and essential part of the performance of, and entertainment group that has been recognized internationally as being outstanding in the discipline for a sustained and substantial period of time, and who has had a sustained and substantial relationship with the group (ordinarily for at least 1 year) and provides functions integral to the performance of the group.

(B) A P-2 classification applies to an alien who is coming temporarily to the United States to perform as an artist or entertainer, individually or as part of a group, or to perform as an integral part of the performance of such a group, and who seeks to perform under a reciprocal exchange program which is between an organization or organizations in the United States and an organization or organizations in one or more foreign states, and which provides for the temporary exchange of artists and entertainers, or groups of artists and entertainers.

(C) A P-3 classification applies to an alien artist or entertainer who is coming temporarily to the United States, either individually or as part of a group, or as an integral part of the performance of the group, to perform, teach, or coach under a commercial or noncommercial program that is culturally unique.

(2) *Filing of petitions*(i) *General.* A P-1 petition for an athlete or entertainment group shall be filed by a U.S. employer or sponsoring organization, a foreign employer, or an established U.S. agent. A P-2 petition for an artist or entertainer in a reciprocal exchange program shall be filed by the U.S. labor organization which negotiated the reciprocal exchange agreement, the sponsoring organization, or an employer in the United States. A P-3 petition for an artist or entertainer in a culturally unique program shall be filed by the sponsoring organization or an employer in the United States. Essential support personnel may not be included on the petition filed for the principal alien(s). These aliens require a separate petition. The petitioner shall file a P petition on Form I-129, Petition for Nonimmigrant Worker, with the Service Center which has jurisdiction in the area where the alien will work. The petition may not be filed more than 6 months before the actual need for the alien's services. A P-1, P-2, or P-3 petition shall be adjudicated at the appropriate Service Center, even in emergent situations.

(ii) *Evidence required to accompany a petition for a P nonimmigrant.* Petitions for P nonimmigrant aliens shall be accompanied by the following:

(A) The evidence specified in the specific section of this part for the classification;

(B) Copies of any written contracts between the petitioner and the alien beneficiary or, if there is no written contract, a summary of the terms of the oral agreement under which the alien(s) will be employed;

(C) An explanation of the nature of the events or activities, the beginning and ending dates for the events or activities, and a copy of any itinerary for the events or activities; and

(D) A written consultation from a labor organization.

(iii) *Form of documentation.* The evidence submitted with an P petition should conform to the following:

(A) Affidavits, contracts, awards, and similar documentation must reflect the nature of the alien's achievement and be executed by an officer or responsible person employed by the institution, establishment, or organization where the work has performed.

(B) Affidavits written by present or former employers or recognized experts certifying to the recognition and extraordinary ability, or, in the case of a motion picture or television production, the extraordinary achievement of the alien, which shall specifically describe the alien's recognition and ability or achievement in factual terms. The affidavit must also set forth the expertise of the affiant and the manner in which the affiant acquired such information.

(C) A legible copy of a document in support of the petition may be submitted in lieu of the original. However, the original document shall be submitted if requested by the Director.

(iv) *Other filing situations*—(A) *Services in more than one location.* A petition which requires the alien to work in more than one location (*e.g.*, a tour) must include an itinerary with the dates and locations of the performances and must be filed with the Service Center which has jurisdiction in the area where the petitioner is located. The address which the petitioner specifies as its location on the petition shall be where the petitioner is located for purposes of this paragraph (p). If the petitioner is a foreign employer with no United States location, the petition shall be filed with the Service Center that has jurisdiction over the area where the employment will begin.

(B) *Services for more than one employer.* If the beneficiary(ies) will work for more than one employer within the same time period, each employer must file a separate petition with the Service Center that has jurisdiction over the area where the alien will perform the services, unless an established agent files the petition pursuant to paragraph (p)(2)(iv) of this section.

(C) *Change of employer.* If a P–1, P–2, or P–3 alien in the United States seeks to change employers or sponsors, the new employer or sponsor must file both a petition and a request to extend the alien's stay in the United States. If the petition was initially filed by an agent, an amended petition must be filed with information relating to the new employer and with a request for an extension of stay.

(D) *Amended petition.* The petitioner shall file an amended petition, with fee, with the Service Center where the original petition was filed to reflect any material changes in the terms and conditions of employment or the beneficiary's eligibility as specified in the original approved petition. A petitioner may add additional similar or comparable performances, engagements, or competitions during the validity period of the petition without filing an amended petition.

(E) *Agents as petitioners.* An established U.S. agent may file a petition in cases involving workers who traditionally are self-employed or use agents to arrange short-term employment on their behalf with numerous employers, and in cases where a foreign employer authorizes the agent to act in its behalf. A petition filed by an agent is subject to the following conditions:

(*1*) A person or company in business as an agent may file the P petition involving multiple employers as the representative of both the employers and the beneficiary(ies) if the supporting documentation includes a complete itinerary of services or engagements. The itinerary shall specify the dates of each service or engagement, the names and addresses of the actual employers, and the names and addresses of the establishments, venues, or locations where the services will be performed. In questionable cases, a contract between the employer(s) and the beneficiary(ies) may be required. The burden is on the agent to explain the terms and conditions of the employment and to provide any required documentation.

(*2*) An agent performing the function of an employer must specify the wage offered and the other terms and conditions of employment by contractual agreement with the beneficiary(ies). The agent/employer must also provide an itinerary of definite employment and information on any other services planned for the period of time requested.

(F) *Multiple beneficiaries.* More than one beneficiary may be included in a P petition if they are members of a group seeking classification based on the reputation of the group as an entity, or if they will provide essential support to P–1, P–2, or P–3 beneficiaries performing in the same location and in the same occupation.

(G) *Named beneficiaries.* Petitions for P classification must include the names of beneficiaries and other required information at the time of filing.

(H) *Substitution of beneficiaries.* Beneficiaries may be substituted for P–1, P–2, and P–3 petitions for groups. To request substitution, the petitioner shall submit a letter requesting such substitution, along with a copy of the petitioner's approval notice, to the consular office at which the alien will apply for a visa or the Port-of-Entry where the alien will apply for admission. Essential support personnel may not be substituted at consular offices or at Ports-of-Entry.

(3) *Definitions.* As used in this paragraph, the term:

Arts includes fields of creative activity or endeavor such as, but not limited to, fine arts, visual arts, and performing arts.

Competition, event, or performance means an activity such as an athletic competition, athletic season, tournament, tour, exhibit, project, entertainment event, or engagement. Such activity could include short vacations, promotional appearances for the petitioning employer relating to the competition, event, or performance, and stopovers which are incidental and/or related to the activity. An athletic competition or entertainment event could include an entire season of performances A group of related activities will also be considered an event. In the case of a P–2 petition, the event may be the duration of the reciprocal exchange agreement. In the case of a P–1 athlete, the event may be the duration of the lien's contract.

Contract means the written agreement between the petitioner and the beneficiary(ies) that explains the terms and conditions of employment. The contract shall describe the services to be performed, and specify the wages, hours of work, working conditions, and any fringe benefits.

Culturally unique means a style of artistic expression, methodology, or medium which is unique to a particular country, nation, society, class, ethnicity, religion, tribe, or other group of persons.

Essential support alien means a highly skilled, essential person determined by the Director to be an integral part of the performance of a P–1, P–2, or P–3 alien because he or she performs support services which cannot be readily performed by a United States worker and which are essential to the successful performance of services by the P–1, P–2, alien. Such alien must have appropriate qualifications to perform the services, critical knowledge of the specific services to be performed, and experience in providing such support to the P–1, P–2, or P–3 alien.

Group means two or more persons established as one entity or unit to perform or to provide a service.

Internationally recognized means having a high level of achievement in a field evidenced by a degree of skill and recognition substantially above that ordinarily encountered, to the extent that such achievement is renowned, leading, or well-known in more than one country.

Member of a group means a person who is actually performing the entertainment services.

Sponsor means an established organization in the United States which will not directly employ a P–1, P–2, or P–3 alien but will assume responsibility for the accuracy of the terms and conditions specified in the petition.

Team means two or more persons organized to perform together as a competitive unit in a competitive event.

(4) *Petition for an internationally recognized athlete or member of an internationally recognized entertainment group (P–1)*—(i) *Types of classification.*—(A) *P–1 classification as an athlete in an individual capacity.* A P–1 classification may be granted to an alien who is an internationally recognized athlete based on his or her own reputation and achievements as an individual. The alien must be coming to the United States to perform services which require an internationally recognized athlete.

(B) *P–1 classification as a member of an entertainment group or an athletic team.* An entertainment group or athletic team consists of two or more persons who function as a unit. The entertainment group or athletic team as a unit must be internationally recognized as outstanding in the discipline and must be coming to perform services which require an internationally recognized entertainment group or athletic team. A person who is a member of an internationally recognized entertainment group or athletic team may be granted P–1 classification based on that relationship, but may not perform services separate and apart from the entertainment group or athletic team. An entertainment group must have been established for a minimum of 1 year, and 75 percent of the members of the group must have been performing entertainment services for the group for a minimum of 1 year.

(ii) *Criteria and documentary requirements for P–1 athletes*—(A) *General.* A P–1 athlete must have an internationally recognized reputation as an international athlete or he or she must be a member of a foreign team that is internationally recognized. The athlete or team must be coming to the United States to participate in an athletic competition which has a distinguished reputation and which requires participation of an athlete or athletic team that has an international reputation.

(B) *Evidentiary requirements for an internationally recognized athlete or athletic team.* A petition for an athletic team must be accompanied by evidence that the team as a unit has achieved international recognition in the sport. Each member of the team is accorded P–1 classification based on the international reputation of the team. A petition for an athlete who will compete individually or as a member of a U.S. team must be accompanied by evidence that the athlete has achieved international recognition in the sport based on his or her reputation. A petition for a P–1 athlete or athletic team shall include:

(*1*) A tendered contract with a major United States sports league or team, or a tendered contract in an individual sport commensurate with international recognition in that sport, if such contracts are normally executed in the sport, and

(*2*) Documentation of at least two of the following:

(*i*) Evidence of having participated to a significant extent in a prior season with a major United States sports league;

(*ii*) Evidence of having participated in international competition with a national team;

(*iii*) Evidence of having participated to a significant extent in a prior season for a U.S. college or university in intercollegiate competition;

(*iv*) A written statement from an official of the governing body of the sport which details how the alien or team is internationally recognized;

(*v*) A written statement from a member of the sports media or a recognized expert in the sport which details how the alien or team is internationally recognized;

(*vi*) Evidence that the individual or team is ranked if the sport has international rankings; or

(*vii*) Evidence that the alien or team has received a significant honor or award in the sport.

(iii) *Criteria and documentary requirements for members of an internationally recognized entertainment group*—(A) *General.* A P–1 classification shall be accorded to an entertainment group to perform as a unit based on the international reputation of the group. Individual entertainers shall not be accorded P–1 classification to perform separate and apart from a group. Except as provided in paragraph (p)(4)(iii)(C)(*2*) of this section, it must be established that the group has been internationally recognized as outstanding in the discipline for a sustained and substantial period of time. Seventy-five percent of the members of the group must have had a sustained and substantial relationship with the group for at least 1 year and must provide functions integral to the group's performance.

(B) *Evidentiary criteria for members of internationally recognized entertainment groups.* A petition for P–1 classification for the members of an entertainment group shall be accompanied by:

(*1*) Evidence that the group has been established and performing regularly for a period of at least 1 year;

(*2*) A statement from the petitioner listing each member of the group and the exact dates for which each member has been employed on a regular basis by the group; and

(*3*) Evidence that the group has been internationally recognized in the discipline for a sustained and substantial period of time. This may be demonstrated by the submission of evidence of the group's nomination or receipt of significant international awards or prices for outstanding achievement in its field or by three of the following different types of documentation:

(*i*) Evidence that the group has performed, and will perform, as a starring or leading entertainment group in productions or events which have a distinguished reputation as evidenced by critical reviews, advertisements, publicity releases, publications, contracts, or endorsements;

(*ii*) Evidence that the group has achieved international recognition and acclaim for outstanding achievement in its field as evidenced by reviews in major newspapers, trade journals, magazines, or other published material;

(*iii*) Evidence that the group has performed, and will perform, services as

a leading or starring group for organizations and establishments that have a distinguished reputation evidenced by articles in newspapers, trade journals, publications, or testimonials;

(*iv*) Evidence that the group has a record of major commercial or critically acclaimed successes, as evidenced by such indicators as ratings; standing in the field; box office receipts; record, cassette, or video sales; and other achievements in the field as reported in trade journals, major newspapers, or other publications;

(*v*) Evidence that the group has achieved significant recognition for achievements from organizations, critics, government agencies, or other recognized experts in the field. Such testimonials must be in a form that clearly indicates the author's authority, expertise, and knowledge of the alien's achievements; or

(*vi*) Evidence that the group has either commanded a high salary or will command a high salary or other substantial remuneration for services comparable to other similarly situated in the field as evidenced by contracts or other reliable evidence.

(C) *Special provisions for certain entertainment groups.*—(*1*) *Alien circus personnel.* The 1-year group membership requirement and the international recognition requirement are not applicable to alien circus personnel who perform as part of a circus or circus group, or who constitute an integral and essential part of the performance of such circus or circus group, provided that the alien or aliens are coming to join a circus that has been recognized nationally as outstanding for a sustained and substantial period of time or as part of such a circus.

(*2*) *Certain nationally known entertainment groups.* The Director may waive the international recognition requirement in the case of an entertainment group which has been recognized nationally as being outstanding in its discipline for a sustained and substantial period of time in consideration of special circumstances. An example of a special circumstances would be when an entertainment group may find it difficult to demonstrate recognition in more than one country due to such factors as limited access to news media or consequences of geography.

(*3*) *Waiver of 1-year relationship in exigent circumstances.* The Director may waive the 1-year relationship requirement for an alien who, because of illness or unanticipated and exigent circumstances, replaces an essential member of a P–1 entertainment group or an alien who augments the group by performing a critical role. The Department of State is hereby delegated the authority to waive the 1-year relationship requirement in the case of consular substitutions involving P–1 entertainment groups.

(iv) *P–1 classification as an essential support alien.*—(A) *General.* An essential support alien as defined in paragraph (p)(3) of this section may be granted P–1 classification based on a support relationship with an individual P–1 athlete, P–1 athletic team, or a P–1 entertainment group.

(B) *Evidentiary criteria for a P–1 essential support petition.* A petition for P–1 essential support personnel must be accompanied by:

(*1*) A consultation from a labor organization with expertise in the area of the alien's skill;

(*2*) A statement describing the alien(s) prior essentiality, critical skills, and experience with the principal alien(s); and

(*3*) A copy of the written contract or a summary of the terms of the oral agreement between the alien(s) and the employer.

(5) *Petition for an artist or entertainer under a reciprocal exchange program (P–2)*—(i) *General.* (A) A P–2 classification shall be accorded to artists or entertainers, individually or as a group, who will be performing under a reciprocal exchange program which is between an organization or organizations in the United States, which may include a management organization, and an organization or organizations in one or more foreign states and which provides for the temporary exchange of artists and entertainers, or groups of artists and entertainers.

(B) The exchange of artists or entertainers shall be similar in terms of caliber of artists or entertainers, terms and conditions of employment, such as length of employment, and numbers of artists or entertainers involved in the exchange. However, this requirement does not preclude an individual for group exchange.

(C) An alien who is an essential support person as defined in paragraph (p)(3) of this section may be accorded P–2 classification based on a support relationship to a P–2 artist or entertainer under a reciprocal exchange program.

(ii) *Evidentiary requirements for petition involving a reciprocal exchange program.* A petition for P–2 classification shall be accompanied by:

(A) A copy of the formal reciprocal exchange agreement between the U.S. organization or organizations which sponsor the aliens and an organization or organizations in a foreign country which will receive the U.S. artist or entertainers;

(B) A statement from the sponsoring organization describing the reciprocal exchange of U.S. artists or entertainers as it relates to the specific petition for which P–2 classification is being sought;

(C) Evidence that an appropriate labor organization in the United States was involved in negotiating, or has concurred with, the reciprocal exchange of U.S. and foreign artists or entertainers; and

(D) Evidence that the aliens for whom P–2 classification is being sought and the U.S. artists or entertainers subject to the reciprocal exchange agreement are artists or entertainers with comparable skills, and that the terms and conditions of employment are similar.

(iii) *P–2 classification as an essential support alien.*—(A) *General.* An essential support alien as defined in paragraph (p)(3) of this section may be granted P–2 classification based on a support relationship with a P–2 entertainer or P–2 entertainment group.

(B) *Evidentiary criteria for a P–2 essential support petition.* A petition for P–2 essential support personnel must be accompanied by:

(*1*) A consultation from a labor organization with expertise in the area of the alien's skill;

(*2*) A statement describing the alien(s) prior essentiality, critical skills, and experience with the principal alien(s); and

(*3*) A copy of the written contract or a summary of the terms of the oral agreement between the alien(s) and the employer.

(6) *Petition for an artist or entertainer under a culturally unique program*—(i)—*General.* (A) A P–3 classification may be accorded to artists or entertainers, individually or as a group, coming to the United States for the purpose of developing, interpreting, representing, coaching, or teaching a unique or traditional ethnic, folk, cultural, musical, theatrical, or artistic performance or presentation.

(B) The artist or entertainer must be coming to the United States to participate in a cultural event or events which will further the understanding or development of his or her art form. The program may be of a commercial or noncommercial nature.

(ii) *Evidentiary criteria for a petition involving a culturally unique program.* A petition for P–3 classification shall be accompanied by:

(A) Affidavits, testimonials, or letters from recognized experts attesting to the authenticity of the alien's or the group's skills in performing, presenting,

coaching, or teaching the unique or traditional art form and giving the credentials of the expert, including the basis of his or her knowledge of the alien's or group's skill, or

(B) Documentation that the performance of the alien or group is culturally unique, as evidence by reviews in newspapers, journals, or other published materials; and

(C) Evidence that all of the performances or presentations will be culturally unique events.

(iii) *P–3 classification as an essential support alien.*—(A) *General.* An essential support alien as defined in paragraph (p)(3) of this section may be granted P–3 classification based on a support relationship with a P–3 entertainer or P–3 entertainment group.

(B) *Evidentiary criteria for a P–3 essential support petition.* A petition for P–3 essential support personnel must be accompanied by:

(*1*) A consultation from a labor organization with expertise in the area of the alien's skill;

(*2*) A statement describing the alien(s) prior essentiality, critical skills and experience with the principal alien(s); and

(*3*) A copy of the written contract or a summary of the terms of the oral agreement between the alien(s) and the employer.

(7) *Consultation*—(i) *General.* (A) Consultation with an appropriate labor organization regarding the nature of the work to be done and the alien's qualifications is mandatory before a petition for P–1, P–2, or P–3 classification can be approved.

(C) Except as provided in paragraph (p)(7)(i)(E) of this section, the petitioner shall obtain a written advisory opinion from an appropriate labor organization. The advisory opinion shall be submitted along with the petition when the petition is filed. If the advisory opinion is not favorable to the petitioner, the advisory opinion must set forth a specific statement of facts which support the conclusion reached in the opinion. Advisory opinions must be submitted in writing and signed by an authorized official of the organization.

(D) Except as provided in paragraph (p)(7)(i) (E) and (F) of this section, written evidence of consultation shall be included in the record of every approved petition. Consultations are advisory and are not binding on the Service.

(E) In a case where the Service has determined that a petition merits expeditious handling, the Service shall contact the labor organization and request an advisory opinion if one is not submitted by the petitioner. The labor organization shall have 24 hours to respond to the Service's request. The Service shall adjudicate the petition after receipt of the response from the labor organization. The labor organization shall then furnish the Service with a written advisory opinion within 5 working days of the request. If the labor organization fails to respond within 24 hours, the Service shall render a decision on the petition without the advisory opinion.

(F) In those cases where it is established by the petitioner that an appropriate labor organization does not exist, the Service shall render a decision on the evidence of record.

(ii) *Consultation requirements for P–1 athletes and entertainment groups.* Consultation with a labor organization that has expertise in the area of the alien's sport or entertainment field is required in the case of a P–1 petition. If the advisory opinion is not favorable to the petitioner, the advisory opinion must set forth a specific statement of facts which support the conclusion reached in the opinion. If the advisory opinion provided by the labor organization is favorable to the petitioner it should evaluate and/or describe the alien's or group's ability and achievements in the field of endeavor, comment on whether the alien or group is internationally recognized for achievements, and state whether the services the alien or group is coming to perform are appropriate for an internationally recognized athlete or entertainment group. In lieu of the above, a labor organization may submit a letter of no objection if it has no objection to the approval of the petition.

(iii) *Consultation requirements for P–1 circus personnel.* The advisory opinion provided by the labor organization should comment on whether the circus which will employ the alien has national recognition as well as any other aspect of the beneficiary's or beneficiaries' qualifications which the labor organization deems appropriate. If the advisory opinion is not favorable to the petitioner, it must set forth a specific statement of facts which support the conclusion reached in the opinion. In lieu of the above, a labor organization may submit a letter of no objection if it has no objection to the approval of the petition.

(iv) *Consultation requirements for P–2 alien in a reciprocal exchange program.* In P–2 petitions where an artist or entertainer is coming to the United States under a reciprocal exchange program, consultation with the appropriate labor organization is required to verify the existence of a viable exchange program. The advisory opinion from the labor organization shall comment on the bona fides of the reciprocal exchange program and specify whether the exchange meets the requirements of paragraph (p)(5) of this section. If the advisory opinion is not favorable to the petitioner, it must also set forth a specific statement of facts which support the conclusion reached in the opinion.

(v) *Consultation requirements for P–3 in a culturally unique program.* Consultation with an appropriate labor organization is required for P–3 petitions involving aliens in culturally unique programs. If the advisory opinion is favorable to the petitioner, it should evaluate the cultural uniqueness of the alien's skills, state whether the events are cultural in nature, and state whether the event or activity is appropriate for P–3 classification. If the advisory opinion is not favorable to the petitioner, it must also set forth a specific statement of facts which support the conclusion reached in the opinion. In lieu of the above, a labor organization may submit a letter of no objection if it has no objection to the approval of the petition.

(vi) *Consultation requirements for essential support aliens.* Written consultation on petitions for P–1, P -2, or P–3 essential support aliens must be made with a labor organization with expertise in the skill area involved. If the advisory opinion provided by the labor organization is favorable to the petitioner, it must evaluate the alien's essentiality to and working relationship with the artist or entertainer, and state whether United States workers are available who can perform the support services. If the advisory opinion is not favorable to the petitioner, it must also set forth a specific statement of facts which support the conclusion reached in the opinion. A labor organization may submit a letter of no objection if it has no objection to the approval of the petition.

(vii) *Labor organizations agreeing to provide consultations.* The Service shall list in its Operations Instructions for P classification those organizations which have agreed to provide advisory opinions to the Service and/or petitioners. The list will not be an exclusive or exhaustive list. The Service and petitioners may use other sources, such as publications, to identify appropriate labor organizations. The Service will also list in its Operations Instructions those occupations or fields of endeavor where it has been determined by the Service that no appropriate labor organization exists.

(i) *Approval and validity of petition*—(i) *Approval.* The Director shall consider all the evidence submitted and such other evidence as he or she may independently require to assist in his or her adjudication. The Director shall notify the petitioner of the approval of the petition on Form I–797, Notice of Action. The approval notice shall include the alien beneficiary's name and classification and the petition's period of validity.

(ii) *Recording the validity of petitions.* Procedures for recording the validity period of petitions are:

(A) If a new P petition is approved before the date the petitioner indicates the services will begin, the approved petition and approval notice shall show the actual dates requested by the petitioner as the validity period, not to exceed the limit specified in paragraph (p)(8)(iii) of this section or other Service policy.

(B) If a new P petition is approved after the date the petitioner indicates the services will begin, the approved petition and approval notice shall generally show a validity period commencing with the date of approval and ending with the date requested by the petitioner, not to exceed the limit specified in paragraph (p)(8)(iii) of this section or other Service policy.

(C) If the period of services requested by the petitioner exceeds the limit specified in paragraph (p)(8)(iii) of this section, the petition shall be approved only up to the limit specified in that paragraph.

(iii) *Validity.* The approval period of a P petition shall conform to the limits prescribed as follows:

(A) *P–1 petition for athletes.* An approved petition for an individual athlete classified under section 101(a)(15)(P)(i) of the Act shall be valid for a period up to 5 years. An approved petition for an athletic team classified under section 101(a)(15)(P)(i) of the Act shall be valid for a period of time determined by the Director to complete the competition or event for which the alien team is being admitted, not to exceed 1 year.

(B) *P–1 petition for an entertainment group.* An approved petition for an entertainment group classified under section 101(a)(15)(P)(i) of the Act shall be valid for a period of time determined by the Director to be necessary to complete the performance or event for which the group is being admitted, not to exceed 1 year.

(C) *P–2 and P–3 petitions for artists or entertainers.* An approved petition for an artist or entertainer under section 101(a)(15)(P)(ii) or (iii) of the Act shall be valid for a period of time determined by the Director to be necessary to complete the event, activity, or performance for which the P–2 or P–3 alien is admitted, not to exceed 1 year.

(D) *Spouse and dependents.* The spouse and unmarried minor children of a P–1, P–2, or P–3 alien beneficiary are entitled to P–4 nonimmigrant classification, subject to the same period of admission and limitations as the alien beneficiary, if they are accompanying or following to join the alien beneficiary in the United States. Neither the spouse nor a child of the alien beneficiary may accept employment unless he or she has been granted employment authorization.

(E) *Essential support aliens.* Petitions for essential support personnel to P–1, P–2, and P–3 aliens shall be valid for a period of time determined by the Director to be necessary to complete the event, activity, or performance for which the P–1, P–2, or P–3 alien is admitted, not to exceed 1 year.

(9) *Denial of petition*—(i) *Notice of intent to deny.* When an adverse decision is proposed on the basis of derogatory information of which the petitioner is unaware, the Director shall notify the petitioner of the intent to deny the petition and the basis for the denial. The petitioner may inspect and rebut the evidence and will be granted a period of 30 days from the date of the notice in which to do so. All relevant rebuttal material will be considered in making a final decision.

(ii) *Notice of denial.* The petitioner shall be notified of the decision, the reasons for the denial, and the right to appeal the denial under 8 CFR part 103. There is no appeal from a decision to deny an extension of stay to the alien or a change of nonimmigrant status.

(10) *Revocation of approval of petition*—(i) *General.* (A) The petitioner shall immediately notify the Service of any changes in the terms and conditions of employment of a beneficiary which may affect eligibility under section 101(a)(15)(P) of the Act and paragraph (p) of this section. An amended petition should be filed when the petitioner continues to employ the beneficiary. If the petitioner no longer employs the beneficiary, the petitioner shall send a letter explaining the change(s) to the Director who approved the petition.

(B) The Director may revoke a petition at any time, even after the validity of the petition has expired.

(ii) *Automatic revocation.* The approval of an unexpired petition is automatically revoked if the petitioner, or the employer in a petition filed by an agent, goes out of business, files a written withdrawal of the petition, or notifies the Service that the beneficiary is no longer employed by the petitioner.

(iii) *Revocation on notice*—(A) *Grounds for revocation.* The Director shall send to the petitioner a notice of intent to revoke the petition in relevant part if he or she finds that:

(*1*) The beneficiary is no longer employed by the petitioner in the capacity specified in the petition;

(*2*) The statement of facts contained in the petition were not true and correct;

(*3*) The petitioner violated the terms or conditions of the approved petition;

(*4*) The petitioner violated requirements of section 101(a)(15)(P) of the Act or paragraph (p) of this section; or

(*5*) The approval of the petition violated paragraph (p) of this section or involved gross error.

(B) *Notice and decision.* The notice of intent to revoke shall contain a detailed statement of the grounds for the revocation and the time period allowed for the petitioner's rebuttal. The petitioner may submit evidence in rebuttal within 30 days of the date of the notice. The Director shall consider all relevant evidence presented in deciding whether to revoke the petition.

(11) *Appeal of a denial or a revocation of a petition*—(i) *Denial.* A denied petition may be appealed under 8 CFR part 103.

(ii) *Revocation.* A petition that has been revoked on notice may be appealed under 8 CFR part 103. Automatic revocations may not be appealed.

(12) *Admission.* A beneficiary may be admitted to the United States for the validity period of the petition, plus a period of up to 10 days before the validity period begins and 10 days after the validity period ends. The beneficiary may not work except during the validity period of the petition.

(13) *Extension of visa petition validity.* The petitioner shall file a request to extend the validity of the original petition under section 101(a)(15)(P) of the Act on Form I–129 in order to continue or complete the same activity or event specified in the original petition. Supporting documents are not required unless requested by the Director. A petition extension may be filed only if the validity of the original petition has not expired.

(14) *Extension of stay*—(i) *Extension procedure.* The petitioner shall request extension of the alien's stay to continue or complete the same event or activity by filing Form I–129, accompanied by a statement explaining the reasons for the extension. The petitioner must also request a petition extension. The extension dates shall be the same for the petition and the beneficiary's stay. The beneficiary must be physically present in the United States at the time the

extension of stay is filed. Even though the requests to extend the petition and the alien's stay are combined on the petition, the Director shall make a separate determination on each. If the alien leaves the United States for business or personal reasons while the extension requests are pending, the petitioner may request the Director to cable notification of approval of the petition extension to the consular office abroad where the alien will apply for a visa.

(ii) *Extension periods*—(A) *P–1 individual athlete.* An extension of stay for a P–1 individual athlete and his or her essential support personnel may be authorized for a period up to 5 years for a total period of stay not to exceed 10 years.

(B) *Other P–1, P–2, and P–3 aliens.* An extension of stay may be authorized in increments of 1 year for P–1 athletic teams, entertainment groups, aliens in reciprocal exchange programs, aliens in culturally unique programs, and their essential support personnel to continue or complete the same event or activity for which they were admitted.

(15) *Effect of approval of a permanent labor certification or filing of a preference petition on P classification.* The approval of a permanent labor certification or the filing of a preference petition for an alien shall not be a basis for denying a P petition, a request to extend such a petition, or the alien's admission, change of status, or extension of stay. The alien may legitimately come to the United States for a temporary period as a P nonimmigrant and depart voluntarily at the end of his or her authorized stay and, at the same time, lawfully seek to become a permanent resident of the United States. This provision does not include essential support personnel.

(16) *Effect of a strike*—(i) If the Secretary of Labor certifies to the Commissioner that a strike or other labor dispute involving a work stoppage of workers is in progress in the occupation at the place where the beneficiary is to be employed, and that the employment of the beneficiary would adversely affect the wages and working conditions of U.S. citizens and lawful resident workers:

(A) A petition to classify an alien as a nonimmigrant as defined in section 101(a)(15)(P) of the Act shall be denied; or

(B) If a petition has been approved, but the alien has not yet entered the United States, or has entered the United States but has not commenced employment, the approval of the petition is automatically suspended, and the application for admission of the basis of the petition shall be denied.

(ii) If there is a strike or other labor dispute involving a work stoppage of workers in progress, but such strike or other labor dispute is not certified under paragraph (p)(16)(i) of this section, the Commissioner shall not deny a petition or suspend an approved petition.

(iii) If the alien has already commenced employment in the United States under an approved petition and is participating in a strike or labor dispute involving a work stoppage of workers, whether or not such strike or other labor dispute has been certified by the Secretary of Labor, the alien shall not be deemed to be failing to maintain his or her status solely on account of past, present, or future participation in a strike or other labor dispute involving a work stoppage of workers but is subject to the following terms and conditions:

(A) The alien shall remain subject to all applicable provisions of the Immigration and Nationality Act and regulations promulgated thereunder in the same manner as all other P nonimmigrant aliens;

(B) The status and authorized period of stay of such an alien is not modified or extended in any way by virtue of his or her participation in a strike or other labor dispute involving a work stoppage of workers; and

(C) Although participation by a P nonimmigrant alien in a strike or other labor dispute involving a work stoppages of workers will not constitute a ground for deportation, an alien who violates his or her status or who remains in the United States after his or her authorized period of stay has expired, will be subject to deportation.

(17) *Use of approval of notice, Form I–797.* The Service has notify the petitioner on Form I–797 whenever a visa petition or an extension of a visa petition is approved under the P classification. The beneficiary of a P petition who does not require a nonimmigrant visa may present a copy of the approved notice at a Port-of-Entry to facilitate entry into the United States. A beneficiary who is required to present a visa for admission, and whose visa expired before the date of his or her intended return, may use Form I–797 to apply for a new or revalidated visa during the validity period of the petition. The copy of Form I–797 shall be retained by the beneficiary and present during the validity of the petition when reentering the United States to resume the same employment with the same petitioner.

(18) *Return transportation requirement.* In the case of an alien who enters the United States under section 101(a)(15)(P) of the Act and whose employment terminates for reasons other than voluntary resignation, the employer whose offer of employment formed the basis of suh nonimmigrant status and the petitioner are jointly and severally liable for the reasonable cost of return transporation of the alien abroad. For the purposes of this paragraph, the term "abroad" means the alien's last place of residence prior to his or her entry into the United States.

* * * * * * *

Dated: July 13, 1994.

Doris Meissner,

Commissioner, Immigration and Naturalization Service

[FR Doc. 94–16674 Filed 8–12–94; 8:45 am]

BILLING CODE 4410–10–M

DEPARTMENT OF JUSTICE

Immigration and Naturalization Service

8 CFR Parts 214 and 274a

[INS 1653–94]

RIN 1115–AC72

Foreign Employers Seeking To Employ Temporary Alien Workers in the H, O, and P Nonimmigrant Classifications

AGENCY: Immigration and Naturalization Service, Justice.

ACTION: Proposed rule.

SUMMARY: This proposed rule amends the Immigration and Naturalization Service (Service) regulations by precluding foreign employers from directly filing petitions for O and P nonimmigrant aliens. Prospective foreign employers seeking to use these classifications will be required to employ the services of an established United States agent in order to file a petition for an O or P nonimmigrant. This proposal also amends the H nonimmigrant regulations by requiring foreign employers seeking to petition for H–2B nonimmigrants to use the services of an established United States agent, removes the current reference to the term "representative," and codifies existing policy with regard to the filing of nonimmigrant petitions for certain professional athletes. This is intended to bring the H, O, and P nonimmigrant regulations into conformity with the employer sanctions provisions of section 274A of the Immigration and Nationality Act (Act).

DATES: Written comments must be submitted on or before October 14, 1994.

ADDRESSES: Please submit written comments, in triplicate, to the Records Systems Division, Director, Policy Directives and Instructions Branch, Immigration and Naturalization Service, 425 I Street, NW., room 5307, Washington, DC 20536. To ensure proper handling, please reference the INS number 1653–94 on your correspondence.

FOR FURTHER INFORMATION CONTACT: John W. Brown, Senior Immigration Examiner, Adjudications Division, Immigration and Naturalization Service, 425 I Street, NW., room 3214, Washington, DC 20536, telephone (202) 514–3240.

SUPPLEMENTARY INFORMATION: The employer sanctions provisions of the Immigration and Nationality Act were created by the Immigration Reform and Control Act of 1986, Pub. L. 99–603, which, among other things, contains provisions making it unlawful for a person or entity to hire an alien knowing the alien is not entitled to engage in employment. Public law 99–603 also requires the employer to examine certain documentation in order to verify an individual's identity and eligibility to work in the United States. Civil and criminal penalties may be imposed upon employers which do not comply with the employer sanctions provisions.

The Service has historically allowed foreign employers to file petitions for certain nonimmigrant workers. However, in view of the fact that the Service cannot enforce the sanctions provisions of Pub. L. 99–603 if the employer does not have a presence in the United States, it has been determined that foreign employers should be precluded from directly filing petitions for aliens in the O and P nonimmigrant classifications. Foreign employers will still be able to use the O and P nonimmigrant classifications but the foreign employers will be required to use the services of an established United States agent in order to file the petition for the alien. Through their United States agent, foreign employers will be responsible for complying with the provisions of section 274A of the Act. The description of an agent has also been modified in this rule to accommodate this change in policy.

The "30-day rule"

In September 1988, the Service adopted a policy with regard to major league sports teams which allowed professional athletes traded between U.S.-based sports teams to play for the new team prior to the filing of the appropriate petition, provided that the new team filed a petition with the Service within 30 days of the trade. Since a single athlete can have a significant impact on a team's performance, and recognizing the length of time required to process certain I–129 petitions, the Service adopted a policy allowing players to play for the new team prior to the filing of the petition. This proposed rule will amend the regulations to include that policy.

Regulatory Flexibility Act

The Commissioner of the Immigration and Naturalization Service, in accordance with the Regulatory Flexibility Act (5 U.S.C. § 605(b)), has reviewed this regulation and, by approving it, certifies that the rule will not have a significant economic impact on a substantial number of small entities. The regulation merely requires foreign employers to use the services of an established United States agent to file petitions for certain nonimmigrant aliens and codifies existing policy with respect to the filing of nonimmigrant petitions for certain professional athletes.

Executive Order 12866

This rule is not considered by the Department of Justice, Immigration and Naturalization Service, to be a "significant regulatory action" under Executive Order 12866, § 3(f), regulatory Planning and Review, and the Office of Management and Budget has waived its review process under § 6(a)(3)(A).

Executive Order 12612

The regulation proposed herein will not have substantial direct effects on the States, on the relationship between the National Government and the States, or on the distribution of power and responsibilities among the various levels of government. Therefore, in accordance with Executive Order 12612, it is determined that this rule does not have sufficient Federalism implications to warrant the preparation of a Federalism Assessment.

Executive Order 12606

The Commissioner of the Immigration and Naturalization Service certifies that she has addressed this rule in light of the criteria in Executive Order 12606 and has determined that it will have no effect on family well-being.

Paperwork Reduction Act

The information collection requirements contained in this rule have been cleared by the Office of Management and Budget (OMB) under the provisions of the Paperwork Reduction Act. The clearance number for this collection is contained in 8 CFR 299.5, Display of Control Numbers.

List of Subjects

8 CFR Part 214

Administrative practice and procedures, Aliens, Employment, Organization and functions (Government agencies).

8 CFR Part 274a

Administrative practice and procedures, Aliens, Employment, Organization and functions (Government agencies).

Accordingly, chapter I of title 8 of the Code of Federal Regulations is proposed to be amended as follows:

PART 214—NONIMMIGRANT CLASSES

1. The authority citation for part 214 continues to read as follows:

Authority: 8 U.S.C. 1101, 1103, 1182, 1184, 1186a, 1187, 1221, 1281, 1282; 8 CFR part 2.

2. Section 214.2 is amended by:

a. Adding a new paragraph (h)(2)(i)(F)(*3*);

b. Revising paragraph (h)(6)(iii)(B); and by

c. Adding a new paragraph (h)(6)(vii), to read as follows:

§ 214.2 Special requirements for admission, extension, and maintenance of status.

* * * * *

(h) * * *

(2) * * *

(i) * * *

(F) * * *

(*3*) A foreign employer who, through an established United States agent, files a petition for an H nonimmigrant alien is responsible for complying with the employer sanctions provisions of section 274A of the Act and 8 CFR part 274a.

* * * * *

(6) * * *

(iii) * * *

(B) An H–2B petitioner shall be a United States employer, an established United States agent, or a foreign employer filing through an established United States agent. A foreign employer may not directly petition for an H–2B nonimmigrant but must use the services of an established United States agent to file a petition for an H–2B nonimmigrant. The petitioning employer shall consider available U.S. workers for the temporary services or labor, and shall offer terms and conditions of employment which are consistent with the nature of the occupation, activity, and industry in the United States.

* * * * *

(vii) *Traded professional H–2B athletes.* In the case of a professional H–2B athlete who is traded from one U.S.-based organization to another organization, employment authorization for the player will automatically continue for a period of 30 days after the player's acquisition by the new organization within which time the new organization is expected to file a new Form I–129 is not filed within 30 days, employment authorization will cease. If the new petition is denied, employment authorization will cease.

* * * * *

3. Section 214.2 is amended by:

a. Revising paragraph (o)(2)(i);

b. Revising paragraph (o)(2)(iv)(A);

c. Adding a new paragraph (o)(2)(iv)(E)(*3*); and by

d. Adding a new paragraph (o)(2)(iv)(G), to read as follows:

§ 214.2 Special requirements for admission, extension, and maintenance of status.

* * * * *

(o) * * *

(2) *Filing of petitions.* (i) *General.* Except as provided for in paragraph (o)(2)(iv)(A) of this section, a petitioner seeking to classify an alien as an O–1 or O–2 nonimmigrant shall file a petition on Form I–129, Petition for a Nonimmigrant Worker, with the Service Center which has jurisdiction in the area where the alien will work. The petition may not be filed more than 6 months before the actual need for the alien's services. An O–1 or O–2 petition shall be adjudicated at the appropriate Service Center, even in emergency situations. Only one beneficiary may be included on an O–1 petition. O–2 aliens must be filed for on a separate petition from the O–1 alien. An O–1 or O–2 petition may only be filed by a United States employer, an established United States agent, or a foreign employer through an established United States agent. A foreign employer may not directly petition for an O nonimmigrant alien but instead must use the services of an established United States agent to file a petition for an O nonimmigrant. An O alien may not petition for himself or herself.

* * * * *

(iv) *Other filing situations*—(A) *Services in more than one location.* A petition which requires the alien to work in more than one location must include an itinerary with the dates and locations of work and must be filed with the Service Center which has jurisdiction in the area where the petitioner is located. The address which the petitioner specifies as its location on the petition shall be where the petitioner is located for purposes of this paragraph.

* * * * *

(E) * * *

(*3*) A foreign employer who, through an established United States agent, files a petition for an O nonimmigrant alien is responsible for complying with the employer sanctions provisions of section 274A of the Act and 8 CFR part 274a.

* * * * *

(G) *Traded professional O–1 athletes.* In the case of a professional O–1 athlete who is traded from one U.S.-based organization to another organization, employment authorization for the player will automatically continue for a period of 30 days after acquisition by the new organization within which time the new organization is expected to file a new Form I–129. If a new Form I–129 is not filed within 30 days, employment authorization will cease. If the new petition is denied, employment authorization will cease.

* * * * *

4. Section 214.2 is amended by:

a. Revising paragraph (p)(2)(i); and by

b. Revising paragraph (p)(2)iv), to read as follows;

§ 214.2 Special requirements for admission, extension, and maintenance of status.

* * * * *

(p) * * *

(2) *Filing of petitions*—(i) *General.* A P–1 petition for an athlete or entertainment group shall be filed by a United States employer, a United States sponsoring organization, an established United States agent, or a foreign employer through an established United States agent. Foreign employers seeking to employ a P–1 alien may not directly petition for the alien but must use the services of an established United States agent. A P–2 petition for an artist or entertainer in a reciprocal exchange program shall be filed by the United States labor organization which negotiated the reciprocal exchange agreement, the sponsoring organization, or an employer in the United States. A P–3 petition for an artist or entertainer in a culturally unique program shall be filed by the sponsoring organization or an employer in the United States. Essential support personnel may not be included on the petition filed for the principal alien(s). These aliens require a separate petition. Except as provided for in paragraph (p)(2)(iv)(A) of this section, the petitioner shall file a P petition on Form I–129, Petition for Nonimmigration Worker, with the Service Center which has jurisdiction in the area where the alien will work. The petition may not be filed more than 6 months before the actual need for the alien's services. A P–1, P–2, or P–3 petition shall be adjudicated at the appropriate Service Center, even in emergency situations.

* * * * *

(iv) *Other filing situations*—(A) *Services in more than one location.* A petition which requires the alien to work in more than one location (*e.g.*, a tour must include an itinerary with the dates and locations of the performances and must be filed with the Service Center which has jurisdication in the area where the petitioner is located. The address which the petitioner specifies as its location on the petition shall be where the petitioner is located for purposes of this paragraph.

(B) *Services for more than one employer.* If the beneficiary(ies) will

work for more than one employer within the same time period, each employer must file a separate petition with the Service Center that has jurisdiction over the area where the alien will perform the services, unless an established agent files the petition pursuant to paragraph (p)(2)(iv)(E) of this section.

(C) *Change of employer.*—(*1*) *General.* If a P–1, P–2, or P–3 alien in the United States seeks to change employers or sponsors, the new employer or sponsor must file both a petition and a request to extend the alien's stay in the United States. The alien may not commence employment with the new employer or sponsor until the petition and request for extension have been approved.

(*2*) *Traded P–1 athletes.* In the case of a professional P–1 athlete who is traded from one U.S.-based organization to another organization, employment authorization for the player will automatically continue for a period of 30 days after acquisition by the new organization within which time the new organization is expected to file a new Form I–129 for P–1 nonimmigrant classification. If a new Form I–129 is not filed within 30 days, employment authorization will cease. If the new petition is denied, employment authorization will cease.

(D) *Amended petition.* The petitioner shall file an amended petition, with fee, with the Service Center where the original petition was filed to reflect any material changes in the terms and conditions of employment or the beneficiary's eligibility as specified in the original approved petition. A petitioner may add additional, similar or comparable performances, engagements, or competitions during the validity period of the petition without filing an amended petition.

(E) *Agents as petitioners.* An established United States agent may file a petition in cases involving workers who traditionally are self-employed or who use agents to arrange short-term employment on their behalf with numerous employers, and in cases where a foreign employer authorizes the agent to act on its behalf. A petition filed by an agent is subject to the following conditions:

(*1*) A person or company in business as an agent may file the P petition involving multiple employers as the representative of both the employers and the beneficiary(ies) if the supported documentation includes a complete itinerary of services or engagements. The itinerary shall specify the dates of each service or engagement, the names and addresses of the actual employers, and the names and addresses of the establishments, venues, or locations where the services will be performed. In questionable cases, a contract between the employer(s) and the beneficiary(ies) may be required. The burden is on the agent to explain the terms and conditions of the employment and to provide any required documentation.

(*2*) An agent performing the function of an employer must specify the wage offered and the other terms and conditions of employment by contractual agreement with the beneficiary(ies). The agent/employer must also provide an itinerary of definite employment and information on any other services planned for the period of time requested.

(*3*) A foreign employer who, through an established United States agent, files a petition for a P nonimmigrant alien is responsible for complying with the employer sanctions provisions of section 274A of the Act and 8 CFR part 274a.

(F) *Multiple beneficiaries.* More than one beneficiary may be included in a P petition if they are members of a group seeking classification based on the reputation of the group as an entity, or if they will provide essential support to P–1, P–2, or P–3 beneficiaries performing in the same location and in the same occupation.

(G) *Named beneficiaries.* Petitions for P classification must include the names of beneficiaries and other required information at the time of filing.

(H) *Substitution of beneficiaries.* Beneficiaries may be substituted for in P–1, P–2, and P–3 petitions for groups. To request substitution, the petitioner shall submit a letter requesting such substitution, along with a copy of the petitioner's approval notice, to the consular office at which the alien will apply for a visa or the Port-of-Entry where the alien will apply for admission. Essential support personnel may not be substituted at consular offices or at Ports-of-Entry. In order to add additional new essential support personnel, a new I–129 petition must be filed with the appropriate Service Center.

* * * * *

PART 274a—CONTROL OF EMPLOYMENT OF ALIENS

5. The authority citation for part 274a continues to read as follows:

Authority: 8 U.S.C. 1101, 1103, 1324a; 8 CFR part 2.

6. Section 274a.12 is amended by:

a. Revising paragraph (b)(9);

b. Revising paragraph (b)(13); and by

c. Revising paragraph (b)(14), to read as follows:

§ 274a.12 Classes of aliens authorized to accept employment.

* * * * *

(b) * * *

(9) A temporary worker or trainee (H–1, H–2A, H–2B, or H–3), pursuant to § 214.2(h) of this chapter. An alien in this status may be employed only by the petitioner through whom the status was obtained. In the case of a professional H–2B athlete who is traded from one U.S.-based organization to another organization, employment authorization for the player will automatically continue for a period of 30 days after acquisition by the new organization within which time the new organization is expected to file a new Form I–129 petition for H–2B classification. If a new Form I–129 is not filed within 30 days, employment authorization will cease. If the new petition is denied, employment authorization will cease;

* * * * *

(13) An alien having extraordinary ability in the sciences, arts, education, business, or athletics (O–1), and an accompanying alien (O–2), pursuant to § 214.2(o) of this chapter. An alien in this status may be employed only by the petitioner through whom the status was obtained. In the case of a professional O–1 athlete who is trade from one U.S.-based organization to another organization, employment authorization for the player will automatically continue for a period of 30 days after the acquisition by the new organization within which time the new organization is expected to file a new Form I–129 petition for O nonimmigrant classification. If a new Form I–129 is not filed within 30 days, employment authorization will cease. If the new petition is denied, employment authorization will cease;

(14) An athlete, artist, or entertainer (P–1, P–2, or P–3), pursuant to § 214.2(p) of this chapter. An alien in this status may be employed only by the petitioner through whom the status was obtained. In the case of a professional P–1 athlete who is traded from one U.S.-based organization to another organization, employment authorization for the player will automatically continue for a period of 30 days after the acquisition by the new organization within which time the new organization is expected to file a new Form I–129 for P–1 nonimmigrant classification. If a new Form I–129 is not filed within 30 days, employment authorization will cease. If the new petition is denied, employment authorization will cease;

* * * * *

Dated: May 13, 1994.

Doris Meissner,

Commissioner, Immigration and Naturalization Service.

[FR Doc. 94-19673 Filed 8-12-94; 8:45 am]

BILLING CODE 4410-10-M

federal register

Monday
August 15, 1994

Part III

Department of Transportation

Research and Special Programs Administration

49 CFR Part 171, et al.
Improvement to Hazardous Materials Identification Systems; Proposed Rule

DEPARTMENT OF TRANSPORTATION

Research and Special Programs Administration

49 CFR Parts 171, 172, 173, 174, 175, 176, and 177

[Docket No. HM-206; Notice No. 94-8]

RIN 2137-AB75

Improvements to Hazardous Materials Identification Systems

AGENCY: Research and Special Programs Administration (RSPA), DOT.

ACTION: Notice of proposed rulemaking (NPRM).

SUMMARY: RSPA is proposing changes to hazard communication requirements of the Hazardous Materials Regulations (HMR). The proposed changes are based on comments received in response to an advance notice of proposed rulemaking (ANPRM), recommendations of the National Academy of Sciences (NAS), and agency initiative. This action will improve the existing hazard communication system; better identification of hazardous materials in transportation will assist emergency response personnel in responding to and mitigating the effects of incidents and accidents involving hazardous materials.

DATES: *Written comments:* Comments must be received on or before December 2, 1994.

Public hearing: A public hearing will be held beginning at 9:00 a.m., October 18-19, 1994.

ADDRESSES: Written comments: Address comments to the Dockets Unit (DHM-30), Research and Special Programs Administration, U.S. Department of Transportation, Washington, DC 20590-0001. Comments should identify the Docket (HM-206) and be submitted in five copies. Persons wishing to receive confirmation of receipt of their comments should include a self-addressed stamped postcard showing the docket number. The Dockets Unit is located in Room 8421 of the Nassif Building, 400 Seventh Street, SW., Washington, DC 20590-0001. Public dockets may be viewed between the hours of 8:30 a.m. and 5:00 p.m., Monday through Friday, except Federal holidays.

Public hearing. The public hearing will be held in the Auditorium of the Federal Aviation Administration Building located at 800 Independence Avenue, SW., Washington, DC 20591. Persons desiring to make oral statements at the hearing should notify the Research and Special Programs Administration (RSPA) Docket Clerk by telephone (202) 366-5046 or in writing by October 3, 1994. Mail written requests to: Docket Clerk, Office of Hazardous Materials Safety, Research and Special Programs Administration, 400 Seventh Street, SW., room 8421, Washington, DC 20590-0001. Each request must identify the speaker; organization represented, if any; daytime telephone number; and the anticipated length of the presentation, not to exceed 10 minutes. Written text of the oral statement should be presented to the hearing officer and reporter prior to the oral presentation. Hearings may conclude before 5:00 p.m. and the second day of the hearing (October 19, 1994) may be cancelled if all persons wishing to give oral comments have been heard. To confirm plans to attend, contact Ms. Helen Engrum at (202) 366-8553.

FOR FURTHER INFORMATION CONTACT: Helen Engrum or John Potter, telephone (202) 366-4488, Office of Hazardous Materials Standards, Research and Special Programs Administration, U.S. Department of Transportation, 400 Seventh Street, SW., Washington, DC 20590-0001.

SUPPLEMENTARY INFORMATION:

I. Legislative Requirements

A. Rulemaking

On November 16, 1990, the President signed into law the Hazardous Materials Transportation Uniform Safety Act of 1990 (HMTUSA; Pub. Law 101-615) which amended the Hazardous Materials Transportation Act (HMTA), 49 App. U.S.C. § 1801 *et. seq.* Section 25 of HMTUSA requires DOT to initiate a rulemaking to determine methods of improving the current system of placarding vehicles transporting hazardous materials and to determine methods for establishing and operating a central reporting system and computerized telecommunication data center that can provide information to facilitate responses to accidents and incidents involving the transportation of hazardous materials. It directs DOT to consider methods of improving the placarding system to include: (1) methods to make placards more visible; (2) methods to reduce the number of improper and missing placards; (3) alternative methods of marking vehicles for the purpose of identifying hazardous materials being transported; (4) methods of modifying the composition of placards to ensure their resistance to fire; (5) improving the coding system used with respect to such placards; (6) identification of appropriate emergency response procedures through symbols on placards; and (7) display of telephone numbers for continually-monitored emergency response telephone systems on vehicles transporting hazardous materials.

Section 25 also requires DOT to evaluate in a rulemaking proceeding whether a central reporting system and computerized telecommunication data center should be operated by the Federal Government or a private entity, either on its own initiative or under contract with the United States. The evaluation must address: (1) the estimated annualized cost of establishing, operating and maintaining such a system and center and for carrier and shipper compliance with such a system; (2) methods for financing the cost of establishing, operating, and maintaining such a system and center; (3) the projected safety benefits of establishing, operating and maintaining such a system and center; (4) whether shippers, carriers and handlers of hazardous materials should have access to such a system; (5) methods for ensuring the security of the information and data stored in such a system; (6) types of hazardous materials and types of shipments for which information and data should be stored in such a system; (7) the degree of liability of the operator of such a system and center for providing incorrect, false or misleading information; (8) deadlines by which shippers, carriers and handlers of hazardous materials should be required to submit information to the operator of such a system and center, and minimum standards relating to the form and content of such information; (9) measures for ensuring compliance with the deadlines and standards for operating such a system; and (10) methods for accessing such a system through mobile satellite service or other technologies having the capability to provide two-way voice, data, or facsimile service.

Section 26 of the HMTUSA requires DOT to initiate a rulemaking on the feasibility, necessity, and safety benefits of requiring hazardous materials carriers (in addition to an existing requirement for shippers) to maintain continually-monitored telephone systems to provide emergency response information and assistance. DOT is required to determine which hazardous materials, if any, and which segments of industry (including persons who own and operate motor vehicles, trains, vessels, aircraft, and in-transit storage facilities) should be covered by such a requirement.

On June 9, 1992, RSPA published an advance notice of proposed rulemaking (ANPRM) in the **Federal Register** [Docket HM-206; 57 FR 24532] posing

63 primary questions, most with secondary questions, under three categories. The ANPRM solicited comments on methods of improving the current system of placarding vehicles transporting hazardous materials, methods to improve the system of identifying hazardous materials in transportation, and the feasibility and necessity of requiring carriers to maintain continually-monitored telephone contacts for emergency response information.

B. NAS Study/DOT Report

Section 25 of HMTUSA requires DOT to contract with the National Academy of Sciences (NAS) to conduct a study of the feasibility and necessity of establishing and operating a central reporting system and computerized telecommunication data center that would receive, store, and retrieve data on all daily shipments of hazardous materials by all modes. DOT is to provide Congress a summary of the NAS report with DOT's recommendations concerning implementation of the NAS recommendations, giving substantial weight to recommendations on the feasibility and necessity of implementing a central reporting and computerized telecommunication data center.

In May 1991, DOT entered into a contract with NAS to conduct the study. A 16-member committee was formed, representing industry, academia, and the emergency response and firefighting communities. The scope of the study was limited to matters that may affect the consequences of hazardous materials incidents after they occur, and not methods of preventing incidents. The committee focused on various potential applications of communications and information technology that would aid emergency responders in obtaining information at hazardous materials incidents and accidents and nontechnological options for improving information through better regulation, enforcement, or training. NAS made recommendations regarding the national central reporting system, a long-term approach to using technology in support of emergency response, and regulatory, enforcement, and training needs.

The committee also reviewed DOT's existing hazard communication system with respect to regulatory, enforcement and training options in the context of not relying on the introduction of new information technologies. The NAS report was submitted to Congress and DOT on April 29, 1993.

On February 15, 1994, the DOT submitted a report to Congress which included a summary of the NAS report and DOT's recommendations. A copy of DOT's report has been included in the Docket.

II. Hazard Identification and Communication System Under the HMR

Over the last 25 years, DOT has developed a comprehensive hazardous materials identification and communication system. The system is designed to provide fire and emergency response personnel with information in the event of a transportation incident or accident involving the release of hazardous materials. Hazard communication and emergency response information requirements are set forth in Subparts C through G of Part 172 of the Hazardous Materials Regulations (HMR; 49 CFR Parts 171–180). The system involves communication of the following types of information: (1) hazardous materials descriptions, including specific or generic proper shipping names, chemical or technical names, hazard classes, identification numbers, and other special information, entered on shipping papers carried on the transport vehicle by the transporter; (2) hazardous materials proper shipping names and identification numbers, marked on non-bulk and bulk packages; (3) primary and subsidiary hazards, identified by labels affixed to packages; (4) primary hazards, identified by placards affixed to transport vehicles, freight containers and bulk packagings; and (5) emergency response information, entered on shipping papers or presented in separate documents.

Emergency response information must be maintained on the transport vehicle, train, or vessel during transportation of the hazardous material in the same manner as is required for shipping papers. On aircraft, emergency response information must be maintained in the same manner as is required for the notification of the pilot-in-command. The information describes immediate hazards to health, risks of fire or explosion, precautions to be taken by responders first arriving at the scene of an incident, initial methods for handling spills and leaks in the absence of fire, and preliminary first aid measures to be taken. This information may be entered on shipping papers, or be presented on appropriate guide pages in DOT's "Emergency Response Guidebook (ERG)," on material safety data sheets, or on other appropriate emergency response guidance documents.

A shipper who offers hazardous materials for transportation must also enter an emergency response telephone number on a shipping paper. The number must be monitored at all times while a shipment is in transportation, including storage incidental to transportation. A first responder using that number must be able to contact, in one phone call, a person who is either knowledgeable about the material and has comprehensive response and mitigation information, or has immediate access to such a person.

Firefighters and emergency response personnel have been trained to use hazard communication and emergency response information in responding to incidents. Shipping names and identification numbers are cross-referenced to emergency response guides in DOT's ERG. The ERG provides guidance for initial actions to be taken in response to hazardous materials incidents. Since 1980, RSPA has distributed more than 3.5 million copies of the ERG to emergency response entities without charge.

The current hazard communication system is recognized worldwide. DOT has aligned U.S. hazard communication requirements with international standards by adoption of shipping descriptions, labels and placards conforming to United Nations Recommendations on the Transport of Dangerous Goods (UN Recommendations). Hazard communication requirements currently in effect have been successfully used in identifying the hazards of materials involved in releases during transportation.

Over the past five years, DOT has substantially amended the U.S. hazard communication requirements. On December 21, 1990, a final rule was published [Docket HM–181; 55 FR 52402 and final rule revisions on 12/21/91; 56 FR 66124] which comprehensively revised the HMR with respect to hazard communication, classification, and packaging requirements. This action simplified and reduced the volume of the HMR, enhanced safety through improved classification and packaging, promoted flexibility, and facilitated international commerce through harmonization with international transport standards. Further, changes to labeling requirements for Division 6.1 Packing Group (PG) III materials, requiring a KEEP AWAY FROM FOOD label, are addressed in an ANPRM recently published in the **Federal Register** [Docket HM–217; 58 FR 59224; 11/8/93]. The issues addressed in Docket HM–217 are not otherwise addressed in this document.

III. NAS Findings and Recommendations

The central recommendation contained in the National Academy of Sciences (NAS) report is that the Federal Government should not attempt to implement the national central reporting system as originally proposed for consideration. NAS said:

> There is no sound basis for defining performance criteria for information to be provided and threshold reliability needed in such a system. There would be no opportunity to allow on-going evaluation to guide implementation, as a phased implementation would allow; and the system would not be designed to make maximum use of existing shipper, carrier, and responder capabilities.

NAS found that the original national central reporting system proposal "is not aimed at the most serious failures of the existing system," such as incidents "in which [shipping] papers or placards are inaccessible because of a crash or fire." NAS concluded that, "because of these shortcomings, the originally proposed system would be unlikely to function as intended or to produce benefits sufficient to justify its costs."

Although NAS recommended that the Government "should not attempt to implement such a system as the originally proposed national central reporting system," it did recommend DOT participation in the evaluation of new information technologies. NAS stated that DOT should, on an ongoing basis, and in conjunction with the shipper and carrier industries and emergency responders, systematically investigate opportunities for application of information technologies to aid emergency responders and reduce the costs of hazardous materials incidents. Specifically, NAS called for pilot programs comprising "controlled experiments with independent, rigorously designed evaluation protocols."

NAS found that, in most instances, the existing hazardous materials communication system is effective and that information available at hazardous materials transportation incident sites meets critical information needs of emergency responders. Based on case studies of 125 incidents, NAS identified six kinds of potential information problems encountered by responders: (1) required sources of information were missing or inaccurate; (2) information sources were obscured, destroyed, or inaccessible because of fire, wreckage, or other barriers; (3) information sources were available and in compliance with the regulations, but failed to fully or efficiently convey essential information; (4) essential information was not provided because the shipment was not subject to the HMR; (5) vehicle operator did not assist emergency responders in obtaining essential information; and (6) responders did not properly use available information. Based on this finding, NAS made the following recommendation:

- DOT, together with the other responsible federal agencies, should form a plan of action to alleviate each of the six categories of information failures identified in this study through changes in regulations, more effective enforcement, and support for improved training of emergency responders and inspectors.

NAS made a number of additional recommendations to improve identification of hazardous materials to minimize the dangers and costs of accidents and enhance emergency response efforts. They are as follows:

- The government should not attempt to implement a system such as the originally proposed national central reporting system, that is, one entailing immediate and universal application of a requirement for shipper or carrier real-time filing of vehicle contents information in a central data base.
- Improvements to the existing system for providing information to emergency responders at hazardous materials incidents are necessary. Therefore, Congress, DOT, and other responsible federal agencies should plan and carry out a program to improve the system. This program should include appropriate measures to apply technology; reforms in regulations, enforcement, and training; and evaluation of the existing system so that efforts can be directed at the most pressing problems.
- DOT should immediately undertake one or more limited start-ups of automated information systems.
- DOT should, on an ongoing basis and in conjunction with the shipper and carrier industries and emergency responders, systematically investigate opportunities for application of information technology to aid emergency responders and reduce the costs of hazardous materials incidents.
- The U.S. Fire Administration, DOT, and the other federal, state, and local agencies that maintain data bases of hazardous materials incidents should formally coordinate to ensure that data are defined and collected uniformly, duplicate reporting is avoided, and data collection is designed to serve essential program evaluation and research needs.
- DOT should establish a monitoring capability that allows it to determine whether its regulations intended to provide emergency responders with information at hazardous materials transportation incidents are working adequately.
- DOT and the U.S. Fire Administration should jointly conduct a study of costs and means of organizing and delivering training to hazardous materials emergency responders and enforcement officers.

IV. Regulatory Issues

A. Summary

Over 230 comments were submitted in response to the ANPRM. Commenters included shippers, carriers, firefighter and police departments and associations, farmers, Federal and State governments, trade associations, emergency response telephone services organizations, and private individuals.

Based on the comments to the ANPRM, the National Academy of Sciences (NAS) recommendations in its report, and RSPA's initiative, several improvements to the existing hazard communications system have been identified as needed and are proposed in this notice of proposed rulemaking (NPRM).

RSPA is proposing to: (1) require identification number markings on transport vehicles and freight containers to improve identification of hazardous materials poisonous by inhalation offered in amounts of more than 400 kilograms (kg) (882 pounds) aggregate gross weight; 2) require identification number marking displays on truckload and carload shipments of non-bulk packages of hazardous materials having a single identification number; 3) require unique labels and placards for both liquids and gases that are poisonous by inhalation; 4) lower the placarding exception in § 172.504(c) from 454 kg (1,000 pounds) to 400 kg (882 pounds) aggregate gross weight of hazardous materials; 5) revise the requirements for use of a FUMIGANT marking; 6) lower from 2,268 kg (5,000 pounds) to 1,000 kg (2,205 pounds) the quantity for specific hazard class placarding when one category of material is loaded on a transport vehicle at one loading facility; 7) prohibit display on transport units of slogans, such as "Drive Safely," which could be confused with placards; 8) require motor carriers to instruct operators of transport vehicles in methods to contact the motor carrier; and 9) require placarding for any quantity of "Organic peroxides, Type B, controlled temperature" materials. Also, included in this proposal are editorial corrections that clarify certain other requirements under the HMR.

A number of changes considered in the ANPRM are not being proposed. Based on the comments and its own analysis, RSPA is *not* proposing to: 1) eliminate the DANGEROUS placard; 2) require added emergency response information to be displayed on placards or vehicles; 3) revise placard visibility, size and location, information display and format, or construction and attachment methods; 4) change existing

color tolerance requirements; or 5) establish a centralized reporting system and computerized telecommunication data center.

Proposals and the decision not to undertake further rulemaking action for certain issues are discussed in detail in the following paragraphs. The complexity of the issues raised and the manner in which commenters responded make it appropriate to synopsize comments addressed to groups of questions pertaining to the same issue.

B. Improvements to placarding identification system

Placard visibility, size and location

1. Would increasing the size of placards, incorporating larger identification numbers and hazard class symbols, improve hazard recognition? What size would be most effective? Are there any specific incidents in which the use of larger placards would have improved emergency response? The HMR specify a minimum size of 273 millimeters (mm) on edge for domestic placards and 250 mm for those conforming to international standards.

2. Is the existing square-on-point configuration too restrictive for adding emergency response guidance and hazard identification information? What changes, if any, should be made? And if so, what would be the costs and benefits?

3. To improve placard visibility, should RSPA require placards to be affixed on a vehicle in a manner so that, in the event of an accident, they can be observed regardless of orientation of the vehicle? For example, should placards be located on the tops and bottoms (in addition to each side and end) of transport vehicles to ensure placard visibility in the event of rollover incidents? This was suggested by the National Transportation Safety Board (NTSB) Safety Recommendation I-90-11 addressing a November 30, 1988 incident involving an overturned motor vehicle. NTSB pointed out that "front placards on the trailer have often been obscured by the tractor, and rear placards attached to removable gates have been thrown from the vehicle during an accident sequence." Section 172.504(a) prescribes the location of placards on transport vehicles.

4. Should the three-inch (76 mm) separation distance between placards and other information displayed on transport vehicles specified in § 172.516(c)(4) be increased to improve the presentation of placards? If so, please specify what distance or height would be effective to ensure that placards are readily identifiable by emergency responders.

5. RSPA is aware of comments that claim that slogans or advertisements displayed on configurations similar to placards can confuse emergency responders. Should RSPA prohibit display of advertisements and such slogans as "Drive Safely" or other information configured in shapes similar to DOT placards?

6. As an alternative to placarding, are there other methods of marking a transport vehicle to improve hazard communication including visibility and durability? For example, would a color banding scheme for marking transport units, as allowed under Canadian Transport of Dangerous Goods (TDG) Regulations, be a workable alternative to placarding?

7. To improve hazard identification and communication during emergencies, should RSPA consider an additional placarding system to include a national motor vehicle numbering system similar to the Universal Machine Language Equipment Register (UMLER) system now used to identify all rail cars in North America?

8. Domestically, use of reflective placards are permitted but not required under the HMR. However, placards constructed of reflective styrene material have been required under Part 5.27 of the Canadian TDG regulations for explosives and certain bulk shipments since January 1986. We estimate the cost per reflective placard as ranging between $6.85 and $15.85 depending on the quantity of placards ordered and information contained. Should reflective placards be required? If so, for what class of hazardous materials? What would be the cost of replacing existing placards with reflective placards?

9. Should RSPA require placards to be displayed at places where hazardous materials are stored incidental to transportation? If so, under what circumstances and in what manner?

Generally, most commenters saw no need to modify DOT's existing system of placard and identification number display. Since the square-on-point configuration of placards is internationally recognized, they believed this standard configuration must be maintained. Most commenters opposed any increase in placard size or change in the square-on-point configuration to accommodate additional emergency response information. Some commenters indicated that an alternative hazard warning system, such as vehicle color banding, which would force some carriers to operate dedicated vehicles, should not replace the existing placarding system. The American Trucking Associations (ATA) estimated that "for one mid-size regional carrier alone, the cost to retrofit its fleet of 1000 vehicles [with revised or additional placarding] would be $540,000 using the costs of existing products."

Several commenters indicated that panels on roll-up doors of trailers and other box-type freight containers are sized to accept the present placard holders and that companies using permanent flip-type placards would be forced to utilize a split design (half-on one panel and half on another) or replace all roll-up doors to accommodate an increase in size. They said the costs to replace doors would be enormous.

Most commenters supported prohibiting display of extraneous information in placard holders. These commenters perceived that safety slogans or signs, such as "Drive Safely," displayed in a diamond-shaped format can be confusing to emergency responders when placed in placard holders or on placard-type displays and, therefore, should be prohibited. Some commenters indicated that increasing the three-inch separation distance between placards and other information would not improve the recognition of placards because placards are readily identifiable by their shape and color.

Most commenters asserted that, because of the numbers of vehicles, a national motor vehicle numbering system would prove to be too complex and ineffective. Several commenters stated that the Universal Machine Language Equipment Register (UMLER) system is designed for fixed route transportation systems, such as rail transportation.

Many commenters questioned the extent to which transport vehicles must be placarded in situations considered to be "incidental to transportation." For example, they asked if placards are required to be maintained on transport vehicles not on public roads until hazardous materials are unloaded, such as when a vehicle remains loaded for an indefinite period in a consignee's fixed facility.

As long as a hazardous material is in transportation, it is subject to the HMR, including any requirements for placarding of the vehicle which contains it. "Incidental to transportation" includes hazardous materials being loaded, unloaded or stored during transportation (e.g., at a trucking company terminal or in a railroad switching yard). RSPA notes that on July 19, 1994, the Occupational Safety and Health Administration (OSHA) published a Final Rule [Docket No. H-022l; 59 FR 36695] in the **Federal Register** requiring employers to maintain package marking, labeling and transport vehicle placarding prescribed under the HMR until hazardous materials are removed. As proposed, OSHA's regulation would require that placards be maintained on a transport vehicle containing hazardous materials even when that vehicle is no longer subject to regulation under the HMR.

A number of commenters supported an increase in the size of placards and identification number displays to make them more visible to improve hazard recognition by responders. However, most commenters indicated that the costs of any major changes to the existing system would be prohibitive.

the benefits would be minimal and the current placarding system should be maintained.

Based on information available, including estimation of costs, RSPA believes that revising placard size, orientation or separation distance requirements, requiring color banding, or implementing a national motor vehicle numbering system would result in substantial cost increases without significant improvement in emergency responder abilities to readily identify hazardous materials in transportation. Therefore, RSPA is not proposing any changes to the HMR concerning placard size, visibility or location.

Most commenters believed that retro-reflective placards would only minimally improve safety and stated that the use of such placards should remain optional because of their high cost.

RSPA believes that requiring retro-reflective placards would not provide benefits that are even a small fraction of potential costs, which may be approximately eight times greater than for current placards. Therefore, RSPA is not proposing to require retro-reflective placards.

Placard Information and Format

10. Should placards display information identifying appropriate emergency response procedures related to the hazardous materials being transported? Should placards display appropriate DOT Emergency Response Guidebook guide numbers referencing potential hazards and corresponding emergency actions?

11. Should there be changes in basic placard format? What specific incidents, if any, demonstrate the need for such changes? Do existing hazard class symbols on placards, like the burning "O" on the OXYGEN placard, adequately convey hazard information to emergency responders? Are there other symbols that could be used to more effectively display hazard warnings?

12. Should RSPA require an additional rectangular placard for information that cannot effectively be contained in the square-on-point configuration? For example, the square-on-point placard could be used as an immediate indicator to responders that hazardous materials are present in the transport vehicle. Responders could then refer to the rectangular placard for essential response and hazard identification information.

13. Should the display of hazardous materials (UN, NA) identification numbers be more extensively used to convey emergency response information? Section 13.7.5 of the UN Recommendations on the Transport of Dangerous Goods (7th Edition) recommends that a fully-loaded truckload of a packaged commodity be identified with the UN identification number for that commodity.

14. Would the display of the CLASS 9 or KEEP AWAY FROM FOOD placards provide emergency responders with needed information in the event of an incident or accident? Should a CLASS 9 placard be required for Elevated Temperature Materials?

15. Should DOT develop a new "Poison Inhalation Hazard" placard to more specifically identify liquids and gases that are poisonous by inhalation? If so, what should the placard design be? Under § 172.505 in Docket HM–181, any quantity of a poisonous material subject to the "Poison-Inhalation Hazard" shipping description in § 172.203(m)(3) must be placarded with either a "POISON" or a "POISON GAS" placard.

16. Under § 172.510, if Division 2.3 Zone A gases and Division 6.1 Packing Group I Hazard Zone A liquids poisonous by inhalation are shipped by rail, the "POISON" and "POISON GAS" placards must be placed within a white square background. Should this requirement be extended to other modes? Should other hazard classes be included in such a requirement?

17. Technical specifications for color tolerance charts for determining the acceptability of colors used on labels and placards are set forth in Appendix A to Part 172. Are color tolerance charts meeting these or other specifications (e.g., the Pantone Color Code System which is used in Canada) available from commercial sources? Are there color standards available which could be incorporated by reference into the HMR? What would be the cost of these standards to users?

Generally, commenters believed that RSPA's regulations provide for an appropriate amount of information through placarding and identification number markings, and that further changes were not needed. Most commenters on this issue did not support addition of emergency response procedural information, such as ERG guide numbers, on placards. They believed that no changes should be made to basic placard format. Most commenters were opposed to requiring an additional placard for other information which they said would complicate compliance, cause confusion and lead to delays in response. They believed that these changes are not justified, would be inconsistent with international hazard communication standards and would add confusion with no added safety.

Commenters were divided on whether identification numbers should be used more extensively. For example, the Chlorine Institute and other commenters supported use of placards with identification numbers on all full load shipments of packaged hazardous materials. Others said requiring further display of identification numbers would not enhance safety, that no change is necessary, and that display of identification numbers on less-than-truckloads (LTL) could result in information overload.

Emergency responders have for over a decade been trained in the use of the existing hazard communication system. There is little evidence to show that additional information, such as the Emergency Response Guidebook (ERG) guide numbers on existing placards or a requirement for a new rectangular placard containing response information would result in any significant improvement to safety. Therefore, RSPA is not proposing to require either additional information or an additional rectangular placard for the display of emergency response information.

There was no consensus on whether a new POISON-INHALATION HAZARD (PIH) placard is needed to more specifically identify materials which are poisonous by inhalation. The Chlorine Institute was not sure a more specific display of PIH information on a placard is warranted, and believed that such a change should be approved by the UN before being considered domestically. Others asserted that a new placard to specifically identify PIH materials would improve response.

Most commenters contend that the current requirement for rail transportation of PIH materials, specifying a square white background for POISON and POISON GAS placards, should not be extended to all modes. The International Association of Fire Chiefs (IAFC) stated that a square white background aids visibility of the placard and should be used whenever a background color causes the placard to be less visible. However, other commenters recommended eliminating the square white background requirement altogether. One commenter said that use of the square white background is not necessary for PIH materials since the words "Inhalation Hazard" are already stenciled as a PIH identification.

RSPA is proposing new labels and placards for materials poisonous by inhalation, i.e., Division 6.1, Packing Group I, Zones A and B, liquids and gases in Division 2.3, Zones A, B, C and D. For poisonous gases, new graphics for the existing POISON GAS label and placard are proposed. For liquids, a new POISON INHALATION HAZARD label and placard is proposed. For both liquids and gases, labels and placards would display a white skull and crossbones on a diamond-shaped black background placed at the top point/corner of the placard. This proposal is responsive to a petition (P–1021) submitted by the American Trucking Associations (ATA) and recognizes one of NAS's principal recommendations to add greater specificity in the communication of hazardous materials.

RSPA believes the effort to clearly identify the hazards of these volatile inhalation poisons, already addressed in shipping paper descriptions and package markings, would be further enhanced by adding a unique label and placard. Michael Hagen of the City of Los Angeles Police Department submitted the graphic design which is proposed in this NPRM.

Several commenters suggested that DOT should require a consistent color scheme such as the Pantone (TM) color code for labels and placards. The National Industrial Transportation League (NITL) said the existing color tolerance system is obsolete and that a range of color tolerance should be acceptable. Others did not support a change in color tolerances, saying that colors already used seem to be adequate. Color tolerance specifications are necessary to ensure color uniformity of placards and labels. The present label and placard color code system, in Appendix A of Part 172 of the HMR, refers to the Munsell Notation Color Specifications. Some commenters believed that the Munsell Notation Color Specifications are antiquated. The Pantone (TM) system was recommended by several commenters. Canada, Great Britain and European countries use colors based on Pantone. It is RSPA's understanding that the Pantone system uses specific colors and does not provide for deviations as does Munsell. At this time, RSPA believes there is insufficient cost and safety information to justify adopting a new color system. Therefore, no changes to the present label and placard color code system are proposed in this notice. However, RSPA requests comments concerning color code systems which allow for a range of color, and estimates of the costs and benefits of adopting a new color tolerance system. RSPA also requests that commenters provide information regarding specific Pantone (TM) colors that, in their view, constitute compliance with the label and placard color specifications, including tolerances, currently referenced in the HMR.

Placard Construction and Attachment

18. Should the composition of placards be improved to minimize destruction and loss during a fire incident? General placard specifications are contained in § 172.519. Please provide examples where fire-resistant placards effectively conveyed hazard warning information to first responders at incidents involving vehicular fires?

19. Should means for attaching placards be improved to minimize tampering or placard loss in an incident? Specifications for a recommended placard holder are contained in Appendix C to Part 172.

Under the HMR, a placard may be made of any plastic, metal, tagboard or other material capable of withstanding, without deterioration or a substantial reduction in effectiveness, a 30-day exposure to open weather conditions. Placards must also withstand, without substantial change, a 72-hour fade-resistance test. In its report, the National Academy of Sciences (NAS) recommended evaluation of new materials for prolonging the fire resistance of placards.

Most commenters on this issue doubted that the safety benefits of fire resistance would offset the additional costs of changing the composition of placard materials. The commenters believed that DOT had not gathered sufficient data to conclude that any placard, regardless of composition, can effectively withstand fire conditions. Several commenters believed that even with the use of other material, the intense heat, fire, and smoke would either destroy or obscure the placard. The majority of commenters on this issue asserted that materials now used for constructing placards are adequate. The International Association of Fire Chiefs (IAFC) doubted that a truly fire-resistant placard could be created and suggested that any attempt to do so would involve substantial cost. Most commenters indicated that the existing system for attaching placards is adequate. They noted that placards cannot be protected from every possibility for destruction, such as vandalism and weather. The Illinois EPA said a more secure method of placard attachment should be specified to reduce the number of lost placards, but offered no specific information. One commenter said there may be a need for weather- and accident-proof placards and holders within reasonable costs. Another commenter suggested that RSPA look at the feasibility of requiring spare placards on transport vehicles. The National Tank Truck Carriers (NTTC) stated that certain mechanical elements in "flip-type" placards impinge upon the legibility of letters and numbers. For example, in certain instances, designers and manufacturers have permitted mechanical elements (e.g., centerposts, pivot rods and retaining clips) to impinge on the letters or digits on a placard. Thus, NTTC suggests an amendment to specify that placard space used to contain digits or numbers contain no other element of manufacture.

RSPA believes that, although the design of mechanical elements of certain types of placard holders (e.g., flip-type) used for attaching placards may encroach upon the legibility of letters and numbers displayed on placards, placard holders manufactured and designed in accordance with the specifications and dimensions in Appendix C of Part 172 are adequate, pose little, if any, problem with placard attachment, and are designed in a manner not to impinge upon the legibility of placards.

There are insufficient data concerning placard loss due to weather, fire, or tampering, and the impact of mechanical elements on placard recognition to conclude that requiring new placard construction standards would significantly improve overall hazard identification. Therefore, no changes in placard construction requirements are proposed at this time. However, for future consideration, RSPA invites further comment on this issue, particularly from manufacturers of placards and researchers on fire retardant materials and placard recognition. Similarly, there is little evidence of significant problems with placard loss due to inadequate securement. Some commenters indicated that secure attachment, tampering and placard loss have not been problems when flip-type placards or placard holders are used. RSPA believes that plastic or metal placard holders presently used by industry provide adequate securement of placards on transport vehicles, and that developing new methods of securement is unnecessary. No changes are proposed for methods of attaching and securing placards.

Exceptions From Placarding Requirements

20. Should the aggregate gross weight exception for Table 2 materials in § 172.504(c) be raised or lowered? If so, to what level?

21. If the 1,000-pound placarding exception is maintained, should it be modified to require that transport vehicles containing packages of certain size (volume or weight) be placarded? For example, should a transport vehicle containing a 55-gallon package be required to be placarded?

22. Should use of the DANGEROUS placard, now specified in § 172.504(b) to indicate the presence of two or more classes of Table 2 materials, be further restricted or eliminated?

23. Should RSPA require the DANGEROUS placard for all shipments of Table 2 materials in amounts less than 1,000 pounds, and specific placards for all shipments of more than 1,000 pounds or other amounts? Should all hazardous materials, regardless of quantity, be required to be placarded when in transportation? Would the meaning and impact of placarding be diminished should all hazardous materials, regardless of quantity, be required to be placarded?

24. Based on the risks involved, should RSPA transfer certain Table 2 materials to

Table 1? If so, please detail your recommendation.

The HMR contains two tables in 49 CFR 172.504. Table 1 specifies categories of hazardous materials for which any quantity must be placarded. A transport vehicle, freight container, or unit load device containing a Table 2 material in non-bulk packagings need not be placarded unless it contains 454 kilograms (kg) (1,000 pounds) or more aggregate gross weight. Also, under § 172.504(b), a transport vehicle or freight container containing two or more classes of materials requiring different placards specified in Table 2 may be placarded DANGEROUS in place of the separate placarding. When 2,268 kg (5,000 pounds) or more of one class of material is loaded at one loading facility, the placard specified for that material in Table 2 must be used.

Most commenters addressing this issue urged RSPA to retain the "1,000-pound" placarding exception for Table 2 materials. The commenters believed that the current placarding exceptions are acceptable and should not be changed, although they were divided on whether to retain the DANGEROUS placard or to limit its use. Most commenters indicated that there is no justification for the transfer of placarding assignments from Table 2 to Table 1.

Some commenters contended that a substantial lowering or elimination of the 1,000-pound exception would result in a proliferation of placards with the cumulative effect of desensitizing responders and the public to the warnings placards are intended to convey. Several commenters said elimination of the exception would subject sales personnel and small package carriers to commercial drivers' licensing (CDL) requirements. Another commenter said DOT should maintain the exception because carrier personnel and shippers are familiar with it. ATA stated that the 1,000-pound exception for placarding of Table 2 materials should remain unchanged. ATA also believed no modifications should be made to the 1000-pound exception based on package size because a vehicle transporting bulk packages must display the proper class placard for any amount of material in the package; thus, the cut-off for package size is already in place at 450 liters (119 gallons) for bulk shipments. Most commenters believed that to modify or eliminate this exception would promote error and loss of responder confidence. Most commenters also saw no need to modify the 1000-pound exception on the basis of package size.

Several commenters, including the Chemical Manufacturers Association (CMA), indicated support for a reduction or elimination of the exception. The CMA stated:

> In the interests of assisting emergency responders, CMA urges DOT to consider reducing the 1,000 pound placarding exception for hazardous materials and discontinue use of the DANGEROUS placard. For less than truckload shipments of multiple hazardous materials, placards for the top three materials (based on the level of hazard, as specified in 49 CFR, Section 173.2a, "Classification of a material having more than one hazard") could be required.

However, CMA believed that if DOT chooses to reduce the placarding exception, DOT should not trigger modifications to the CDL requirements based on placarding; in this case the 1000-pound exception should remain. The IAFC believes that the exception should be lowered to no more than 200 pounds to cover 55-gallon drums. The National Association of Chemical Recyclers (NACR) said that all vehicles transporting hazardous materials in any quantity should be placarded. One commenter believed that eliminating the exception would make things simpler for shippers, enforcement personnel and responders. Another commenter stated that the current 1000-pound exception leaves the door wide open for hazardous materials tragedies.

A majority of commenters on this issue said no change to the exception allowing use of the DANGEROUS placard is needed. Commenters who urged retaining the DANGEROUS placard said that it is well recognized and understood. They acknowledged that the DANGEROUS placard offers no specific instruction to responders except to alert them that there is more than one hazard class in a vehicle; on the other hand, they said that, if hazard class placards were used for each product in a mixed load, the response system would be overburdened and diluted. Other commenters said not only should the DANGEROUS placard be retained but that its use should be extended to Table 1 materials.

Opponents of the continued use of the DANGEROUS placard cited its lack of useful information and supported its elimination. One commenter supported elimination of the placard because it offers little information to responders and the complexity of the DANGEROUS placard requirements promotes non-compliance. Most commenters opposed transferring certain Table 2 materials to Table 1 and alleged that they do not pose the same level of risk.

In this notice, RSPA is proposing three changes to placarding requirements in § 172.504.

The DANGEROUS placard and the 1,000-pound placarding exception are components of a well-understood system which has been in use for many years; however, without these, or similar, exceptions, RSPA believes there might be such a proliferation of placards on transport vehicles as to diminish the effectiveness of placarding. However, RSPA agrees with NAS recommendations and commenters' suggestions that some modification of provisions for use of the DANGEROUS placard is warranted. RSPA is proposing to revise 49 CFR 172.504(b) to specify that when 1,000 kg (2,205 pounds) (rather than 2268 kg (5,000 pounds) as currently specified) of one or more category of materials requiring the same placard is loaded on a transport vehicle at one loading facility, the specific placard for that class is required to be displayed. This proposal recognizes both the needs of enforcement personnel for more specific identification when large quantities of non-bulk packagings are present on a transport vehicle and the operational difficulties for shippers and carriers when transporting mixed loads of categories of hazardous materials requiring different placards. It is believed that this proposal would incrementally improve hazard communication without unduly impacting current practices. RSPA also proposes to lower the placarding exception in § 172.504(c)(1) from 454 kg (1,000 pounds) to 400 kg (882 pounds) aggregate gross weight of hazardous materials. The 400-kg level is proposed also to incrementally improve hazard communication without unduly impacting current practices. This breakpoint was selected because it is generally consistent with the breakpoint between non-bulk and bulk packagings. In general, this proposed lowering of the placarding exception would allow one 55-gallon drum of Table 2 hazardous material on a transport vehicle to go unplacarded, whereas the current exception would allow two. RSPA recognizes that lowering the placarding exception to 400 kg (882 pounds) may increase costs to industry but believes that more specific hazard warning information is needed to aid emergency responders in making more effective emergency response decisions.

A third change is proposed to placarding Tables 1 and 2 of § 172.504(e). RSPA believes materials that must be refrigerated during transportation should be identified without regard to quantity. Certain

organic peroxides can decompose with such rapidity within a package that the resultant heat and gas will violently burst the package. A control temperature is the temperature above which a package of this material may not be offered for transportation, or transported. RSPA believes that such organic peroxides may pose significant risk if involved in accidents that result in a loss of temperature control. Because of the unique hazards associated with these materials in transportation, RSPA proposes to include "Organic peroxides, Type B, liquid or solid, temperature controlled" in Table 1 of § 172.504(e), which would require placarding in any quantity.

Transition Period

25. Is there a need for a longer transition period, beyond October 1, 1994 as required in § 171.14(b)(4) under HM–181, for the implementation of placarding requirements? What effect would a longer transition period have on the ability of emergency responders to respond to hazardous materials incidents?

Many of the comments concerning the 1994 effective date are no longer applicable because the transition period for implementing the new placarding system was extended for hazardous materials transported domestically by motor vehicles. On October 1, 1992, in response to numerous petitions from motor carriers to minimize the impact of converting to the new placarding system, RSPA amended § 171.14(c)(2) to extend the transition period from October 1, 1994, until October 1, 2001, for highway operations only (*see* Docket HM–181; 57 FR 45446).

Many commenters, including the Conference On the Safe Transportation of Hazardous Articles, Inc. (COSTHA) and the CMA, urged RSPA to establish one effective date for the implementation of new placarding requirements under HM–181 and HM–206. They contended that different effective dates for changes made under HM–181 and for changes made under HM–206 would result in additional implementation costs. A number of commenters said the original October 1, 1994 effective date for implementation of HM–181 placarding changes (applicable to domestic, intermodal and rail shipment) would be adequate, provided the final rule in HM–206 made no major revision to the placarding system. Several commenters suggested a flexible transition period, depending on the extent of changes to the system. Most commenters believed that major revisions in HM–206 would require new transition periods.

RSPA is not proposing any change to the transitional placarding provisions in § 171.14 in this notice. With regard to placarding changes proposed in this notice, it is anticipated that a minimum of a one year transition period would be provided for implementation of new requirements following issuance of a final rule. (See section-by-section highlights for § 172.502).

C. Central Reporting System and Computerized Telecommunication Data Center

Establishment of Data Center

26. Should a central reporting system and computerized telecommunications data center be established? If so, should it be operated by the Federal Government or by a private entity, either on its own initiative, or under contract to the Government?

27. What would be the projected safety benefits of establishing and operating such a system?

28. Should remote locations, such as Alaska, be excluded from mandatory participation in a central computerized data reporting system?

29. To what extent do existing centralized data reporting systems already provide dispatcher-to-vehicle transmissions? Could these systems be modified to provide information to emergency responders in the event of incidents or accidents involving hazardous materials?

30. What elements of DOT's hazard communication system, if any, could be eliminated by the use of centralized reporting? Marking, Labeling and/or Placarding? Shipping papers? Incident reporting?

Out of 196 commenters responding to Question 26, 170 were opposed to such a system. They contended that costs were incalculable and that such a system is unworkable and of minimal use to responders. One commenter summarized his opposition to mandatory participation in a central reporting system. The commenter stated:

> It would not add one piece of information not already required under 49 CFR. It would require a massive effort to train industry employees and an estimated 40,000 paid and volunteer fire departments. It would encourage non-compliance due to the cost and complexity of complying with reporting requirements, and it would increase risk of misinformation. Mandatory reporting would put US businesses at a disadvantage or, if applied to foreign shippers, encourage trade retaliation.

Five commenters stressed that emphasis should be placed on training rather than tracking shipments. Seventeen commenters opposed the proposed data system but supported the application of some kind of electronic notification for tracking extremely hazardous materials, such as those requiring registration. Three commenters said the proposed reporting system and data center needs further study.

Three commenters supported establishment of the reporting system, one without qualification, the International Association of Firefighters (IAFF), and two on the condition that the U.S. Government operate it. The IAFF presented no information in response to questions 26 through 55. The National Transportation Safety Board (NTSB) stated:

> Because the Safety Board has not investigated any accidents in which a computerized tracking system would have affected the outcome of the response to the accident, the Board has no basis for comments on this issue.

Commenters offered little detailed discussion of whether a mandatory central reporting system should be operated by the Federal Government or by a private entity. Several commenters asked why a government-operated reporting system should be established in competition with existing services being operated in the private sector. The National Propane Gas Association (NPGA) referred to extensive voluntary cooperation between shippers and existing communication services that would disappear if a central reporting system is set up and operated by the Federal Government. NPGA stated that the costs of government operation of this system would exceed the costs of operating existing communication network. They also said that a government-operated central reporting system would be subjected to budget cuts and appropriation constraints.

Many commenters indicated that a centralized reporting system could not replace all or part of DOT's existing hazard communication requirements.

D. Other Comments Relating to the Central Reporting System

RSPA Evaluation

RSPA agrees with the central recommendation contained in the NAS report and the majority of commenters on this issue. Therefore, RSPA is not proposing to establish a centralized reporting system and telecommunication data center. RSPA believes that the national central reporting system described in the Hazardous Materials Transportation Uniform Safety Act would be extremely complicated, burdensome, expensive in its implementation, and of questionable benefit. In the long term, however, RSPA believes that the existing system will be augmented by real- or near-real-time technologies capable of providing information to responders electronically. RSPA also believes that

such capabilities will piggy-back communications systems established by industry for economic rather than safety reasons.

RSPA agrees with NAS' finding that overall information system improvement would best evolve from advances in the efficiencies of many existing systems already applied daily to hundreds of shipper and carrier operations. Carefully phased-in improvements will build overall effectiveness of hazard communications systems already universally relied on.

RSPA will continue to review the emerging technology of electronic monitoring for both rail and highway modes. In the near term, RSPA will evaluate the results of such pilot programs for rail carriers as the Houston Cooperative Emergency Planning Project. This project establishes the first direct computer link between a railroad and a major fire department designed to exchange hazardous material and freight information for the benefit of first responders.

Based on the findings and recommendation in the NAS report and lack of supporting information by commenters to the ANPRM and our assessment, RSPA is not proposing the establishment and implementation of the central reporting system and computerized telecommunication data center.

Data Entry and Removal

31. When, and by whom, would data be entered into the system? For example, must a farmer who picks up a variety of pesticides from a chemical distributor enter data into this system? Who would enter data, and when would data be entered, for shipments originated by foreign shippers? How would required data be entered by shippers and carriers who do not have computer capabilities?

32. At what points in the distribution chain would additional entries have to be made, e.g., highway/rail interchanges? How would the system accommodate data interchange between carriers? Between modes? Who would be responsible for entering data regarding intermodal shipments?

33. If *only* shippers enter data, how would the system include less-than-truckload distribution where an average shipment will involve multiple vehicles (pickup, line hauls, and delivery)?

34. Should a shipment report contain: the name and address of the party providing the data; point of shipment origin; point of shipment destination; vehicle identification; DOT proper shipping name, hazard class and commodity identification number; emergency telephone contact number; and quantity of materials involved and reportable quantities for hazardous materials that are also hazardous substances? Are disclosures related to so-called "blind" shipments of any relevance to current business practices?

35. What additional information should be included for hazardous waste shipments? Who should be required to enter hazardous waste data? The original shipper or generator? The consolidator of various waste shipments from small generators? The treatment facility? The disposal facility?

36. How can the accuracy of data entered into the system be assured?

37. Once data is entered into the system, how long should it remain in the data base until it is purged? Who should purge the system once shipments reach consignees: The originating shipper; carrier; consignee or system personnel?

Many commenters dismissed Questions 31–37 by reiterating that no such system should be established. Several commenters said these questions indicate the complexity of running such a system. Responsibilities need to be assigned, information needs to be entered, transferred and accepted in timely fashion. They said for the system to work effectively, data reliability must be perfect and noted that the system must be promptly purged of data when shipments are complete or it will be overwhelmed.

Commenters questioned expected benefits gained from such a system since information on placards, labels, shipping papers, and emergency response information documents is already available to emergency responders, without delay, at incident sites. One commenter indicated that the complicated operations involved in establishing and maintaining a reporting center increase the risk of error. Probability of error increases as a result of making and deleting entries throughout hazardous materials distribution.

Commenters contended that the proposed system provides no mechanism to ensure accuracy of massive amounts of data. Deletions from the data base relating to completed shipments may seriously lag behind actual termination. The American Trucking Associations commented that, "Vigilance on the part of the person entering information is the only 'assurance' of accuracy. With only a 1% error rate that vigilance results in excess of 365 million errors per year. The key to accurate data is to minimize and control those who can change data." Many commenters indicated, given that the system would accept data from a variety of people, accuracy could suffer.

System Access and Safeguards

38. Who should have access to such a system for obtaining information about hazardous materials shipments and technical and other emergency response information? Should other governmental organizations, such as Federal and state emergency response teams, or law enforcement agencies monitoring the distribution of chemicals commonly used in illegal drug manufacture, be permitted to access the system? Should industry emergency response teams have access?

39. What methods should be employed for ensuring the security of the information in such a system?

40. How can shipment information be limited to persons who have no competitive interest in other shippers' or carriers' information?

No consensus emerged from Questions 38–40 regarding who should have access to the system or how to maintain confidentiality of data. Many commenters stated that there is an enormous potential for abuse of the system and indicated that, as proposed, the system would lack access control. Commenters indicated that uncontrolled access to a centralized system would be a threat to individual business security and confidentiality. Some commenters said that private enterprises should not have access to shipping data because of competitive reasons. Others said that no government entity should have access to any centralized data system. National Tank Truck Carriers commented that it is essential that access be limited only to governmental entities that pledge confidentiality.

A few commenters stated that access cannot be limited in any way if the system is to work well. INFOTRAC said, "There is no way to accurately forecast who might have emergency need of the information and under what circumstances." Another commenter agreed that tight security to confidential and sensitive business data would lead to delayed access, negating the intended effect of such a system.

Some commenters suggested procedures for maintaining confidentiality of data. Their concerns are illustrated by the National Industrial Transportation League's comments. NITL stated:

> Only emergency response personnel that are certified and bonded for handling confidential information should have access to any central data base system. Access by any individual must be fully traceable, and with a documented need-to-know reason for accessing the system.
>
> No government organization at any level, other than Emergency Responders, should have access to a central reporting system.
>
> Confidential data is involved. ICC rules prohibit carriers from disclosing shipping data; same rules should apply here.
>
> No data should remain on system after it is purged.

Another commenter said computer passwords could be issued to parties approved for access.

Emergency Responders: Use of System

41. What data elements pertaining to emergency response should be required to be entered into the system? If emergency response information is to be a part of the system, who should be responsible for its inclusion for uniformity of presentation and content?

42. How would emergency responders identify individual shipments in transit by using this system? By vehicle identification numbers? By vehicle registration numbers? By aircraft tail numbers? By other means?

43. How would the system deliver information to emergency responders? Direct data center-to-response vehicles? Data center-to state or local level dispatching units-to-vehicle? Modem-to-modem? Telephonic link? Facsimile hard copy to vehicle receivers? Other methods? Would data from an electronic notification system reach on-scene responders in time to make basic first-response decisions?

44. How can such a system be accessed through mobile satellite service or other technologies having the capability of providing 2-way voice, data or facsimile services?

45. Would *only* satellite tracking-augmented real-time information (providing vehicle identification at all times) be of any use to responders?

46. If the electronic shipment notification system is extended to the local level, would it be more cost-effective to link the system with local emergency planning committees (LEPCs) established under Superfund Amendments and Reauthorization Act (SARA) of 1986, local fire departments, police departments or other local organizations?

47. Please provide details regarding any accident in which emergency response personnel have been killed or injured due to involvement of hazardous materials transported in compliance with existing regulations (e.g., placarding, labeling, package marking and shipping paper requirements) that would have been averted had a centralized data system been established and operating at that time.

Considering the complexities involved in manipulating massive amounts of data nationwide, most commenters to this issue indicated that response information from a central reporting system may not reach first-responders in time to be of much use. They believed that no centralized system would effectively replace the real-time observance of placards, package labels, markings, shipping papers and emergency response information required under 49 CFR part 172.

Some commenters asserted that, if a centralized system is implemented, only the information now required by DOT for emergency response should be entered into it. Others expressed concern over an inevitable lack of data uniformity in a nationwide system involving a diversity of users and varying levels of response expertise. One way to assure uniformity of information, they said, would be to rely on the Chemical Transportation Emergency Center's (CHEMTREC's) files of response data that already cover the most commonly transported hazardous materials. One commenter suggested that a data base with information similar to DOT's Emergency Response Guidebook (ERG) should be established. INFOTRAC commented that "emergency response elements should be left to existing professional response systems with the experience and ability to deal with the unique attributes of hazardous materials emergencies. The uniformity of content would be impossible to control."

Some commenters were not sure how emergency responders would identify individual shipments in transit by using a central reporting system. They suggested that either vehicle identification numbers could be entered into the system and used to access cargo manifest data or shipment information could be linked with the vehicle registration system or with vehicle license plate numbers. Commenters contended that a centralized computer system would be of little use without real-time capabilities. No information was presented about how a nationwide satellite tracking system might be configured or how satellite tracking capabilities might be meshed with a near-real-time notification system presumably consisting of telephonic data entries to a mainframe computer at system headquarters for voice, data, or facsimile access by responders.

Some commenters concluded that any lag time resulting from the intricacies of transferring data from thousands of terminals to a mainframe for responder access would defeat the intended purpose of centralized reporting, i.e., to provide cargo identification information in time for a first responder to make decisions. With so much information being entered into such a system, lag time between entry and transmission could be significant. They said some shipments may be completed before original entry is recorded in the system and made accessible. Given the presumed technical sophistication of a centralized reporting system, most commenters on this issue doubted that most local emergency response organizations like fire or police departments, have the technical capability to effectively link with it at this time. Many commenters, such as the Association of American Railroads (AAR) and National Tank Truck Carriers (NTTC), stated that they were not aware of any situation where a fatality or an injury occurred due to hazardous materials transportation that would have been mitigated had a central reporting system existed.

Training In Use of System

48. How would training for operating a central computerized tracking system be presented? How often? To whom should training be presented or required?

49. How would the system be organized to allow for different operational training levels or operator sophistication?

Some commenters asserted that training for the operation of a centralized reporting system must be substantial and widespread. Many commenters said all system users would have to obtain equal levels of basic training in order to properly enter, change, retrieve and delete information. Some said training must reflect different uses of the system and that training should be customized based on use and need. Several commenters said training for those needing access to the system would present the biggest problem.

As a first step, ATA said RSPA should develop a manual on use of the system and suggested that initial and recurrent training requirements could mirror the training schedules in 49 CFR part 172, subpart H. Several commenters, including NPGA, said that, although it would be very difficult to estimate the scope of training needed without knowing the dimensions of the system, it could be accomplished in cooperation with appropriate trade associations and professional societies.

System Costs

50. What would be the total annualized estimated costs of employing a nationwide central reporting system?

51. What would be the capital costs, operating costs (including telecommunication costs), and personnel or contractor costs for establishing and maintaining a centralized reporting system?

52. Should user fees be imposed to cover the costs of operating such a system? If so, should fees be based on total annual shipments? On a per shipment basis? On a per entry basis? Should governmental agencies using the system be charged a fee based on the amount of system usage?

53. What would be the impact of the added costs of complying with mandatory electronic shipment notification requirements on the ability of U.S. industry to compete in the international marketplace?

54. What would be the impact of imposing a user fee on foreign shippers or carriers?

55. What would be the cost impact of requiring Federal agencies to comply with mandatory electronic shipment notification requirements? (Federal agencies make over 500,000 hazardous materials shipments a year.)

A number of commenters said the cost of implementing the system would be

prohibitive to industry, would drive up pass-through costs to the public and could have the effect of making U.S. industry non-competitive in European and Asian markets. Several commenters said they had no idea of a total cost of implementing the proposed reporting system. NTTC said that since proponents of the system have given the public "not a clue" regarding the elements or dimensions of the system, it was refraining from comment on system costs. Another commenter said it is impossible to evaluate this proposal without a specific study of the hardware, software and administration that would be put in place to establish this system. Several commenters said required software alone would cost tens of millions of dollars.

Many commenters addressing total system cost ventured a range of total cost estimates from "billions" for all industry to tens of millions annually for association-represented groups of businesses. Individual companies claimed they would pay millions annually. The National Agricultural Chemical Association (NACA) claimed that the cost would be prohibitive and especially burdensome and discriminatory for small business and that no justification has been given to prove it would provide more accurate or even more timely information to responders. One commenter said that creation and maintenance of this system would impose enormous costs on shippers and carriers of hazardous materials not only in terms of computer manifest fees but in terms of the labor needed to generate and transmit them. The NITL stated that, at $12 per shipment, total system costs could run in the billions of dollars. NITL added that internal costs for training and administering the system would add an additional loss to productivity—and that this does not include capital expense needed to implement and utilize the system.

ATA estimated a total cost to the trucking industry, based on an estimate of $12 per entry, would be in excess of $2.19 billion a year. ATA said that this cost does not take into account shipments in LTL (less-than-truckload) operations that will be transferred in transit up to six times. The National Welding Supply Association (NWSA) in its summary of expectations said, at a minimum, each distributor would have to transmit 156 sets of shipping papers daily by facsimile to the system. The association said that even at the low end cost range the average NWSA member would pay $1,872 each day in manifest fees, and that assuming a distributor operates 250 days/year that distributor would pay $468,000 in manifest fees. NWSA notes that this cost would have a devastating effect on profits for the average NWSA distributor, and that system fees would amount to an annual operating cost of from 9.4% to 28% of gross sales.

Commenters representing regional interests emphasized the high cost of a national program to their areas. For example, the Petroleum Marketers of Iowa estimated an annual cost of between $5.8 and $19.4 million annually for Iowa petroleum businesses.

Because so little is known about the specifics of the central reporting system as proposed, many commenters said it would be very difficult to arrive at precise estimates of the costs of participating in such a system. Many commenters were unable to give good estimates of specific capital or operating costs to establish and maintain a centralized reporting system introduced as a concept with few parameters. The Fertilizer Institute's comment is representative: "Costs would be extremely high and anybody's guess at this time. Since there is no system and no staff currently, everything would be new and would include development costs."

Commenters were divided about the efficacy of imposing user fees to support a government-operated system. Many commenters believed that if a system is established, it is certain user fees would be imposed, and that equitable fees would be based on annual shipment data. Some commenters said imposition of user fees would push many companies beyond profit margins.

A majority of commenters on this issue, including NITL, said mandatory requirements to participate in a centralized reporting system would definitely reduce the trade surplus that chemicals generate every year for the United States. ATA said a required centralized reporting system would raise costs of goods transported within, imported into, and exported from the U.S., cutting deeper into imbalance of trade. Considering massive cost to U.S. chemical companies if the system is implemented, CMA said our global competitiveness would be greatly affected. Many commenters warned that the impact of imposing user-fee requirements on foreign shippers for the operation of the U.S.-based system would create a substantial barrier for companies seeking to export to our country, undercutting U.S. trade policies. Many commenters envisioned retaliatory actions.

If the proposed central reporting system is imposed, most commenters on this issue said agencies of the Federal Government must not be exempted from participating in the system regardless of what it would cost. Other commenters noted, that based on an estimate of 500,000 government shipments annually, the cost to taxpayers would be in excess of $6 million a year.

E. Continually-monitored Telephone Systems

56. Should carriers, in addition to shippers, be required to maintain continually-monitored emergency response telephone systems for all or certain hazardous materials in transportation as specified in 49 CFR 172.604? Why? What would be the costs or benefits? What specific incidents, if any, demonstrate the need for the carrier requirement?

57. What has been the experience of the continually-monitored telephone system requirement in 49 CFR § 172.604 imposed on shippers?

58. Should a requirement for a carrier continually-monitored telephone system be triggered by a specific amount of hazardous materials being carried? Should a requirement for carrier continually-monitored telephone systems be applied only to shipments of hazardous materials in bulk packaging?

59. Should such a requirement be applied only to certain types and quantities of hazardous materials, such as Packing Group I or II poisons, flammable or corrosive materials; certain classes of explosives, or highway-route-controlled radioactive materials?

60. Should a carrier's continually-monitored number be added to shipping papers or other shipper documentation? Or should it be marked on the transport vehicle or on the transport vehicle placarding? Any or all of these options?

61. How would carriers obtain detailed emergency response information regarding the hazardous materials on their vehicles? Would placement of continually-monitored phone numbers on placards, or transport vehicles, be useful to emergency responders? Would the addition of this kind of information diminish the effectiveness of placards?

62. What qualifications should be established for carriers to carry out response assistance through a continually-monitored telephone system?

63. As shippers are permitted to do, should carriers be authorized to use such chemical information services such as CHEMTREC to perform the carrier's monitored phone responsibility?

Most of the 93 commenters on this issue opposed requiring carriers to maintain a continually-monitored 24-hour telephone number for providing emergency response information. Opponents of this requirement believed the existing emergency response communication system is sufficient. The National Transportation Safety Board (NTSB), among others, said that since shippers already provide a 24-hour

emergency response telephone number on shipping papers, they see no need for a continually-monitored telephone system for motor carriers. Some carriers have voluntarily provided 24-hour telephone numbers, although it is not clear whether these numbers are intended to be used for emergency response purposes. Many commenters said they believed this would be a duplication of effort and the cost of such a system and of training personnel to operate it would be enormous, without any increase in the level of safety.

Sixteen commenters supported requiring carriers to maintain continually-monitored emergency response telephone systems. Some of the commenters said it may only be feasible to apply this requirement to carriers transporting extremely hazardous materials, such as radioactive materials, chlorine and explosives. The International Association of Fire Chiefs stated:

> The easiest way to do this when shipping papers or further identification is not available, is to be able to immediately contact the carrier. The carrier can then identify the load on that vehicle and refer us to the proper manufacturer for information.

Commenters opposed to the requirement believed that it would result in confusion to have two 24-hour emergency response telephone numbers on the shipping paper, which could result in delays from mistakes. The Conference on Safe Transportation of Hazardous Articles, Inc. (COSTHA) stated:

> Without additional study of the potential costs and benefits of a continually monitored telephone system for carriers, DOT should not saddle transporters with this responsibility. Additional telephone numbers could seriously complicate emergency response efforts and coordination.

Several commenters believed placement of an additional emergency response telephone number on a shipping paper may actually hinder emergency response, since the carrier would most likely only be knowledgeable about the transport equipment and not necessarily the characteristics and constituents of the material being transported. NITL stated that they support CMA's position that a carrier number, in addition to other numbers on a shipping paper, could actually confuse responders, seriously complicate the situation, and could delay proper mitigation.

In their response to the issue of whether a carrier's continually-monitored telephone number should be marked on a transport vehicle or on transport vehicle placarding, most commenters opposed display of any additional information on placards, including a carrier's continually-monitored emergency response telephone number. Although several commenters, such as, the Illinois EPA and PPG Industries, Inc., supported marking of the transport vehicle with a carrier's continually-monitored emergency response telephone number, the majority of the commenters made no specific comment or recommendation on whether a carrier's continually-monitored emergency response telephone number should be marked directly on a transport vehicle.

Opposition to marking a carrier's continually-monitored emergency response telephone number on a transport vehicle is illustrated by ATA's comment. ATA stated:

> As the name and address of the motor carrier already is required to be displayed on the sides of the power unit (and in most cases company logos are prominently displayed across all four sides of a trailer) emergency responders generally have no trouble identifying the carrier. Paperwork accompanying shipments generally are imprinted with home office telephone numbers and other company information. Motor carrier identification and telephone notification generally is needed to inform the motor carrier that their vehicle has been involved in an incident, not to request information regarding incident management.

Most commenters believed that such a requirement would be costly and confusing, and there is no evidence that the current emergency response information requirements are not adequate.

RSPA generally agrees with commenters that potential problems and confusion may occur by requiring a carrier contact telephone number, in addition to the shipper's and possibly other organizations (e.g., CHEMTREC) telephone numbers, on shipping papers for accessing emergency response information. RSPA also agrees with the commenters that the display of a carrier contact telephone number on the carrier's transport vehicle would not be necessary in most situations, since there is other identifying information already displayed on the transport vehicle to assist responders. However, RSPA shares NAS' concerns that in some instances vehicle operators may be unprepared or unable to provide pertinent carrier-related information to emergency responders and others at the scene of hazardous materials accidents/incidents. Consequently, RSPA proposes to require each carrier who transports or accepts a hazardous material for transportation by air, highway, rail, or water, for which shipping papers are required, to instruct the operator of the transport vehicle to contact the carrier in the event of an emergency involving hazardous materials.

In addition, RSPA has been made aware that emergency responders have had difficulty in identifying what hazardous materials are present on a transport vehicle when the transport vehicle is disconnected or separated from its motive power and dropped or parked at such places as truck stops, motels, or other locations. RSPA believes there is a need to assist emergency responders in obtaining information about hazardous materials in these situations. Therefore, RSPA proposes to require each carrier to mark its telephone number on the separated transport vehicle, have shipping papers and emergency response information readily available on the separated transport vehicle, or comply with the emergency response information facility requirements specified in § 172.602(c)(1). This proposal would not apply to transport vehicles that are dropped or parked at a carrier facility, e.g., terminal or consignee/consignor facility, since these facilities are subject to the requirements in § 172.602(c)(1). Nothing in this proposal would waive or modify the Federal Motor Carrier Safety Regulations' (49 CFR 385–399) vehicle parking requirements (§ 397.7) for motor carriers. RSPA believes that this proposal is responsive to NAS' concerns on the ability of carriers to provide some assistance to emergency responders at the scene of hazardous materials accidents/incidents and would be a beneficial augmentation to the current hazard communication requirements.

F. Other RSPA Initiatives

In evaluating potential improvements of the existing hazard communication system, RSPA identified a number of potential changes which were not specifically addressed in the ANPRM. These are discussed in the following paragraphs.

Identification Numbers

Under the HMR, identification numbers are currently required to be displayed on cargo tanks, portable tanks, multi-unit tank car tanks, and other bulk packagings. RSPA believes that application of identification number markings to packaged hazardous materials shipments in truckload or carload quantities would enhance the ability of emergency responders to respond effectively to incidents involving these types of shipments. Although NAS made no specific recommendation to require

identification numbers for packaged hazardous materials in fully loaded transport vehicles, RSPA believes such a requirement would be responsive in part to NAS' concerns regarding sufficiency of emergency response information available to responders. For example, fully loaded transport vehicles containing packaged hazardous materials marked with a single identification number would display the identification number on the outside of the vehicle. This would be used in conjunction with the DOT ERG by emergency responders to more quickly obtain mitigation information. In most instances, responders now must rely on shipping paper information and package markings inside the vehicle to determine identification numbers. RSPA believes this extension of the use of identification numbers would add to the overall effectiveness of DOT's hazard communications system by improving on-scene recognition of hazardous materials by emergency responders. Therefore, RSPA proposes to require the display of the identification number on a fully-loaded transport vehicle or freight container (proposed § 172.323) containing one category of packaged hazardous materials, and on transport vehicles or freight containers containing more than 400 kg (882 pounds) aggregate gross weight of a material poisonous by inhalation (§ 172.313). RSPA believes these two changes would improve mitigation efforts and be responsive to NAS' concerns for improving the identification of hazardous materials in emergency situations.

In certain instances, a cargo tank or other bulk packaging may be transported inside a closed transport vehicle or freight container, and identification numbers may not be displayed on the transport vehicle or freight container. In this notice, RSPA is proposing to revise § 172.328 to clarify that an identification number marking must be displayed on a transport vehicle or freight container containing a hazardous material in a cargo tank, if the identification number marking on the cargo tank is not visible during transportation. Similarly, § 172.331 would be clarified to provide that a transport vehicle or freight container containing a hazardous material in a bulk packaging other than a cargo tank, portable tank, tank car and multi-unit tank car tank must be marked with the identification number, if the identification number is not visible during transportation. This proposed clarification of the two sections is consistent with the requirement in § 172.326(c)(1) for portable tanks.

Fumigant Marking

Many consignments of goods are treated with fumigants that pose a risk during transportation, in particular to workers who may be exposed unknowingly when they open transport units. Currently, § 173.9 sets forth requirements, for rail transportation only, for identifying each transport unit containing a lading that has been treated with a fumigant.

In this notice, RSPA proposes to: 1) extend the requirements in § 173.9 to all modes of transportation; 2) extend the requirement to display the FUMIGANT marking from only Division 2.3 and Division 6.1 materials to every material used to fumigate the contents of a transport vehicle or freight container; 3) specify that a fumigated transport vehicle or freight container is a package containing a hazardous material for application of the fumigation requirements; 4) for international shipments, require that the bill of lading or other shipping document accompanying the shipment contain hazard warning information concerning the fumigant; and 5) revise the FUMIGANT marking, consistent with the display specified in the United Nations Recommendations on the Transport of Dangerous Goods.

RSPA believes the FUMIGANT marking currently specified in § 173.9 is obsolete and ineffective for communicating hazard warning information. Furthermore, RSPA believes that the design of the FUMIGANT marking appearing in the United Nations Recommendations on the Transport of Dangerous Goods would better communicate the hazards through use of the POISON symbol, pared down text, and larger size. Adoption of the U.N. marking would align domestic regulations with international regulations. Therefore, RSPA also is proposing to revise the design of the FUMIGANT marking to more appropriately identify the hazard and to conform to international standards. As an alternative to the FUMIGANT marking, RSPA proposes to recognize use of the label authorized by the EPA in 40 CFR part 156. RSPA requests comments as to whether there is a need to reference requirements of other agencies pertaining to fumigants. RSPA also requests estimates of the numbers of fumigated shipments that would be marked under this proposal and the costs of marking.

Availability of Shipping Papers and Emergency Response Information

For transportation by highway, § 177.817(e) requires that a shipping paper "is readily available to, and recognizable by, authorities in the event of an accident or inspection." RSPA proposes to amend § 177.817(e) to clarify that the term "authorities" includes emergency response personnel such as volunteer and paid fire personnel and that the requirement also applies to an incident involving hazardous materials, not necessarily resulting from an accident such as a vehicular collision. RSPA proposes to add similar provisions to §§ 174.26, 175.33 and § 176.30 to ensure that hazardous materials information is readily available to authorities (including emergency responders) in the rail, air and water modes, respectively. Although this is an obvious intent of existing requirements for maintaining shipping paper information, it is currently unstated. Similarly, RSPA proposes to revise requirements for emergency response information in § 172.602 to clarify that this information also must be made available to authorities, including emergency responders, in the event of an incident involving hazardous materials, or an inspection.

V. Section-by-Section Highlights

This section-by-section summary addresses highlights of the proposed changes to hazard communications requirements.

Section 171.11, 171.12 and 171.12a. In §§ 171.11(d)(9)(iii), 171.12(b)(8)(iii) and 171.12a(b)(5)(iii) the words "POISON INHALATION HAZARD" would replace the word "POISON" in reference to labeling poison inhalation hazard materials other than gases.

Section 171.14. The Placard Substitution Table in paragraph (c)(2) would be revised by addition of a POISON INHALATION HAZARD placard for Division 6.1, Packing Group I, materials poisonous by inhalation.

Section 172.302. A new paragraph (g) would be added to reference the fumigation marking requirements in § 173.9.

Section 172.313. Paragraph (c) would be added to require transport vehicles or freight containers containing more than 400 kilograms (kg) (882 pounds) aggregate gross weight of non-bulk packages containing a material poisonous by inhalation to be marked with the identification number of that material.

Section 172.323. Section 172.323 would be added to require an

identification number display on a fully-loaded transport vehicle or freight container containing non-bulk packages of hazardous materials having a single identification number. This requirement would not apply to materials classed as ORM-D or to limited quantities of hazardous materials that are excepted from identification number marking requirements.

Section 172.328. Paragraph (a)(3) would be added to clarify that an identification number marking must be displayed on a transport vehicle or freight container containing a hazardous material in a cargo tank, if the identification number marking on the cargo tank is not visible during transportation.

Section 172.331. Paragraph (c) would be added to clarify that a transport vehicle or freight container containing a hazardous material in a bulk packaging other than a cargo tank, portable tank, tank car and multi-unit tank car tank must be marked with the identification number, if the identification number marking on the bulk packaging is not visible during transportation.

Section 172.332. Paragraph (a) would be revised to reference new §§172.313(c) and 172.323.

Section 172.400. The table of label designations in paragraph (b) would be revised by adding reference to the new POISON INHALATION HAZARD label (proposed § 172.429) for Division 6.1, PG I, Zone A and B materials. The entry for the POISON label applying to 6.1, PG I and II materials would be revised to read "other than inhalation hazard."

Section 172.416. This section would be revised to prescribe the new POISON GAS label.

Section 172.429. Section 172.429 would be added to prescribe the new POISON INHALATION HAZARD label.

Section 172.502. Paragraph (a)(2) would be revised to specifically prohibit display of safety signs or safety slogans, such as "Drive Safely," that by their color, shape, design or content could be mistaken for a hazard warning placard. Paragraph (b)(3) would be added to provide a transition period for removing existing safety signs or safety slogans which could be confused with hazard warning placards.

Section 172.504. 1) Paragraph (b) would be revised by lowering from 2,268 kg (5,000 pounds) to 1,000 kg (2,205 pounds) aggregate gross weight, the amount of one category of material contained on a transport vehicle, freight container or rail car for which specific placarding is required. 2) In paragraph (c) the placarding exception would be lowered from 454 kg (1,000 pounds) to 400 kg (882 pounds) aggregate gross weight of hazardous materials. 3) In paragraph (e), Table 1 placard assignments would be revised to add the new POISON INHALATION HAZARD placard (proposed § 172.555) for Division 6.1, PG I, Zone A and B materials and to include the entry "5.2 (Organic peroxide, Type B, liquid or solid, temperature controlled)" in the first column, the placard name "ORGANIC PEROXIDE" in the second column, and "§ 172.552" in the third column. 4) In Table 2, the entry "5.2" would be replaced by the entry "5.2 (Other than Organic peroxides, Type B, liquid or solid, temperature controlled)" in the first column. 5) In paragraph (f), an exception would be provided from displaying a POISON placard in those instances when a POISON INHALATION HAZARD placard or POISON GAS placard is required.

Section 172.505. Paragraph (a) would be revised to replace "POISON" with "POISON INHALATION HAZARD" to correctly reference the new placard (proposed § 172.555) for Division 6.1, PG I, Zone A and B materials.

Section 172.510. In paragraphs (a)(2) and (e) "POISON" would be replaced with "POISON INHALATION HAZARD". In paragraph (a)(3), "POISON—RESIDUE" would be replaced with "POISON INHALATION HAZARD—RESIDUE" to correctly reference the placard proposed in § 172.555. Paragraph (d) would be removed and reserved, as requirements for fumigated transport vehicles would be relocated to §§ 172.302(g) and 173.9.

Section 172.540. This section would be revised to include the new POISON GAS placard.

Section 172.555. Section 172.555 would be added to prescribe the POISON INHALATION HAZARD placard.

Section 172.602. Paragraph (c) would be revised to clarify that emergency response information must be readily available to authorities, including emergency response personnel, in the event of an accident, incident involving hazardous materials, or inspection.

Section 172.606. This section would be added to require each carrier who transports a hazardous material, for which shipping papers are required, to instruct the operator of a motor vehicle, train, aircraft, or vessel to contact the carrier in the event of an accident or incident involving hazardous materials. The section would prescribe information requirements for transport vehicles separated from motive power and parked at other than consignee, consignor or carrier facilities.

Section 173.9. The FUMIGANT marking would be revised for consistency with changes provided in the United Nations Recommendations on the Transport of Dangerous Goods (8th Edition). These requirements would apply to transportation by rail, highway, vessel, and aircraft. In addition, the size of the FUMIGANT marking would be revised from "25 cm (9.8 inches) wide and 20 cm (7.9 inches) high" to at least "30 cm (11.8 inches) wide and at least 25 cm (9.8 inches) high." See discussion under Section IV.F. of this preamble.

Section 173.29. An empty packaging is not subject to any other requirements in the HMR if the shipping name and identification number markings and hazard warning labels or placards are removed, obliterated, or covered. For clarity, the introductory text of paragraph (b)(1) would be revised to add the phrase "any other markings indicating the material is hazardous (e.g., RQ, INHALATION HAZARD)."

Section 174.25. In the placard notation and endorsement table, the placard notation "POISON" for the entry "Division 6.1 PG I Zone A" would be revised to read "POISON INHALATION HAZARD;" and "Division 6.1 PG I Zone B, placarded POISON INHALATION HAZARD," would be added in its appropriate sequence to conform to the proposed placarding requirements for materials poisonous by inhalation.

Section 174.26. (1) Paragraph (a) would be revised to reference the new POISON INHALATION HAZARD placard for Division 6.1, PG I, Hazard Zone A materials, and to clarify that the referenced placards are displayed on a square background. (2) Although train consists are presumed to be accurate, the NTSB recommended that the matter be clarified in the HMR (*see* NTSB Safety Recommendation R–90–38). Therefore, paragraph (b) would be revised to clarify that a train consist must reflect the current position in the train of each rail car containing a hazardous material. (3) Also, paragraph (c) would be revised to require that shipping paper information be readily available to authorities, including emergency response personnel, in the event of an accident, incident involving hazardous materials, or inspection.

Section 175.33. Paragraph (b) would be revised to require that a copy of the written notification of pilot-in-command shall be made readily available to authorities, including emergency response personnel, in the event of an accident, incident involving hazardous materials, or inspection.

Section 175.630. This section would be revised to add references to the new POISON INHALATION HAZARD label

and delete obsolete references to "etiologic" substances.

Section 176.30. Paragraph (a) would be revised to require that the dangerous cargo manifest be made readily available to authorities, including emergency response personnel, in the event of an accident, incident involving materials listed on the manifest, or inspection.

Section 177.817. Paragraph (e) would be revised to clarify that the term "authorities" includes emergency response personnel and that an incident involving hazardous materials is an event requiring that shipping papers be made available to authorities.

Sections 174.680, 176.600, and 177.841. Editorial corrections would be made in these sections to reference the proposed POISON INHALATION HAZARD label.

VI. Regulatory Analyses and Notices

A. Executive Order 12866 and DOT Regulatory Policies and Procedures

This proposed rule is considered a significant regulatory action under section 3(f) of Executive Order 12866 and, therefore, was subject to review by the Office of Management and Budget. The rule is considered significant under the regulatory policies and procedures of the Department of Transportation (44 FR 11034). A regulatory evaluation is available for review in the docket.

B. Executive Order 12612

This proposed rule has been analyzed in accordance with the principles and criteria contained in Executive Order 12612 ("Federalism"). The Hazardous Materials Transportation Act contains an express preemption provision (49 U.S.C. App. 1804(a)(4)) that preempts State, local, and Indian tribe requirements on certain covered subjects. Covered subjects are:

(i) the designation, description, and classification of hazardous materials;

(ii) the packing, repacking, handling, labeling, marking, and placarding of hazardous materials;

(iii) the preparation, execution, and use of shipping documents pertaining to hazardous materials and requirements respecting the number, content, and placement of such documents;

(iv) the written notification, recording, and reporting of the unintentional release in transportation of hazardous materials; or

(v) the design, manufacturing, fabrication, marking, maintenance, reconditioning, repairing, or testing of a package or container which is represented, marked, certified, or sold as qualified for use in the transportation of hazardous materials.

This proposed rule concerns improvements to the standards mandated under 49 CFR Part 172 for placarding, labeling, marking, emergency response information and shipping papers. If a final rule is issued, it would preempt State, local, or Indian tribe requirements in accordance with the standards set forth above. The HMTA (49 App. U.S.C. 1804(a)(5)) provides that if DOT issues a regulation concerning any of the covered subjects after November 16, 1990, DOT must determine and publish in the **Federal Register** the effective date of Federal preemption. That effective date may not be earlier than the 90th day following the date of issuance of the final rule and not later than two years after the date of issuance. RSPA proposes that the effective date of Federal preemption for these requirements be six months after publication of the final rule. Comments are solicited on this proposed date. Thus, RSPA has limited discretion in this area, and preparation of a federalism assessment is not warranted.

C. Regulatory Flexibility Act

I certify that this proposed rule will not have a significant economic impact on a substantial number of small entities. Although this proposed rule would apply to all shippers and carriers of hazardous materials, some of whom are small entities, the proposals contained herein would not result in significant economic impacts.

D. Paperwork Reduction Act

The information collection requirements contained in this rule have been approved by the Office of Management and Budget under the provisions of the Paperwork Reduction Act of 1980 (44 U.S.C. 3504(h)) and assigned control number 2137–0034 and 2137–0580.

E. Regulation Identifier Number (RIN)

A regulation identifier number (RIN) is assigned to each regulatory action listed in the Unified Agenda of Federal Regulations. The Regulatory Information Service Center publishes the Unified Agenda in April and October of each year. The RIN number contained in the heading of this document can be used to cross-reference this action with the Unified Agenda.

List of Subjects

49 CFR Part 171

Hazardous materials transportation, General information, Regulations, and Definitions.

49 CFR Part 172

Hazardous materials transportation, Hazardous waste, Labels, Markings, Packaging and containers, Reporting and recordkeeping requirements.

49 CFR Part 173

Hazardous materials transportation, Packaging and containers, Radioactive materials, Reporting and recordkeeping requirements, Uranium.

49 CFR Part 174

Hazardous materials transportation, Radioactive materials, Railroad safety.

49 CFR Part 175

Air carriers, Hazardous materials transportation, Radioactive materials, Reporting and recordkeeping requirements.

49 CFR Part 176

Hazardous materials transportation, Maritime carriers, Radioactive materials, Reporting and recordkeeping requirements.

49 CFR Part 177

Hazardous materials transportation, Motor carriers, Radioactive materials, Reporting and recordkeeping requirements.

In consideration of the foregoing, title 49, chapter I of the Code of Federal Regulations would be amended as set forth below:

PART 171— GENERAL INFORMATION, REGULATIONS, AND DEFINITIONS

1. The authority citation for Part 171 would continue to read as follows:

Authority: 49 App. U.S.C. 1802, 1803, 1804, 1805, 1808, 1815, 1818; 49 CFR Part 1.

§ 171.11 [Amended]

2. In § 171.11, in paragraph (d)(9)(iii), the word "'POISON' or 'POISON GAS'" would be replaced with "POISON INHALATION HAZARD or POISON GAS".

§ 171.12 [Amended]

3. In § 171.12, in paragraph (b)(8)(iii), the word "'POISON' or 'POISON GAS'" would be replaced with "POISON INHALATION HAZARD or POISON GAS".

§ 171.12a [Amended]

4. In § 171.12a, in paragraph (b)(5)(iii), the word "'POISON' or 'POISON GAS'" would be replaced with "POISON INHALATION HAZARD or POISON GAS".

5. In § 171.14, the Placard Substitution Table in paragraph (c)(2) would be revised to read as follows:

§ 171.14 Transitional provisions for implementing requirements based on the UN Recommendations.

* * * * *

(c) * * *

(2) * * *

PLACARD SUBSTITUTION TABLE

Hazard class or division No.	Current placard name	Old (Sept. 30, 1991) placard name
Division 1.1	Explosives 1.1	Explosives A.
Division 1.2	Explosives 1.2	Explosives A.
Division 1.3	Explosives 1.3	Explosives B.
Division 1.4	Explosives 1.4	Dangerous.
Division 1.5	Explosives 1.5	Blasting agents.
Division 1.6	Explosives 1.6	Dangerous.
Division 2.1	Flammable gas.	Flammable gas.
Division 2.2	Nonflammable gas.	Nonflammable gas.
Division 2.3	Poison gas	Poison gas.
Class 3	Flammable	Flammable.
Combustible liquid.	Combustible ..	Combustible.
Division 4.1	Flammable solid.	Flammable solid.
Division 4.2	Spontaneously combustible.	Flammable solid.
Division 4.3	Dangerous when wet.	Flammable solid W.
Division 5.1	Oxidizer	Oxidizer.
Division 5.2	Organic peroxide.	Organic peroxide.
Division 6.1, PG I (Zone A and B, inhalation hazard).	Poison inhalation hazard.	Poison.
Division 6.1, PG I and II (other than Zone A and B).	Poison	Poison.
Division 6.1, PG III.	Keep away from food.	(None required).
Class 7	Radioactive ...	Radioactive.
Class 8	Corrosive	Corrosive.
Class 9	Class 9	(None required).

* * * * *

PART 172— HAZARDOUS MATERIALS TABLE, SPECIAL PROVISIONS, HAZARDOUS MATERIALS COMMUNICATIONS, EMERGENCY RESPONSE INFORMATION, AND TRAINING REQUIREMENTS

6. The authority citation for Part 172 would continue to read as follows:

Authority: 49 App. U.S.C. 1803, 1804, 1805, 1808; 49 CFR Part 1, unless otherwise noted.

7. In § 172.302, paragraph (g) would be added to read as follows:

§ 172.302 General marking requirements for bulk packagings.

* * * * *

(g) A rail car, freight container, truck body or trailer in which the lading has been fumigated with any material, or is undergoing fumigation, must be marked as specified in § 173.9 of this subchapter.

8. In § 172.313, paragraph (c) would be added to read as follows:

§ 172.313 Poisonous hazardous materials.

* * * * *

(c) A transport vehicle or freight container loaded with more than 400 Kg (882 pounds) aggregate gross weight of packages containing a material poisonous by inhalation shall be marked as required by § 172.332 with the identification number specified for the material, in the § 172.101 Table, on each side and each end of the transport vehicle or freight container.

9. Section 172.323 would be added to read as follows:

§ 172.323 Truckload and carload quantities of hazardous materials in non-bulk packages.

A transport vehicle or freight container containing a truckload or carload quantity of non-bulk packages containing hazardous material having a single identification number must be marked with the identification number specified for the hazardous material in the § 172.101 Table on a placard, orange panel or plain white square-on-point configuration as specified in §§ 172.332 or 172.336, as appropriate. This section does not apply to packages containing ORM–D materials or limited quantities of hazardous materials excepted from identification number marking requirements by § 172.301(f)(1).

10. In § 172.328, paragraph (a)(3) would be added to read as follows:

§ 172.328 Cargo tanks.

(a) * * *

(3) For a cargo tank transported on or in a transport vehicle or freight container, if the identification number marking on the cargo tank required by § 172.302(a) is not visible, the transport vehicle or freight container must be marked as required by § 172.332 on each side and each end with the identification number specified for the material in the § 172.101 Table.

* * * * *

11. In § 172.331, paragraph (c) would be added to read as follows:

§ 172.331 Bulk packagings other than portable tanks, cargo tanks, tank cars and multi-unit tank car tanks.

* * * * *

(c) For a bulk packaging contained in or on a transport vehicle or freight container, if the identification number marking on the bulk packaging required by § 172.302(a) is not visible, the transport vehicle or freight container must be marked as required by § 172.332 on each side and each end with the identification number specified for the material in the § 172.101 Table.

12. In § 172.332, paragraph (a) would be revised to read as follows:

§ 172.332 Identification number markings.

(a) *General.* When required by §§ 172.302, 172.313, 172.323, 172.326, 172.328, 172.330, or 172.331 of this subpart, identification numbers must be displayed on orange panels or placards as specified in this section or, when appropriate, on white square-on-point configurations as prescribed in § 172.336(b).

* * * * *

13. In § 172.400, the table of label designations in paragraph (b) would be revised to read as follows:

§ 172.400 General labeling requirements.

* * * * *

(b) * * *

Hazard class or division	Label name	Label design or section reference
1.1	EXPLOSIVES 1.1.	172.411
1.2	EXPLOSIVES 1.2.	172.411
1.3	EXPLOSIVES 1.3.	172.411
1.4	EXPLOSIVES 1.4.	172.411
1.5	EXPLOSIVES 1.5.	172.411
1.6	EXPLOSIVES 1.6.	172.411
2.1	FLAMMABLE GAS.	172.417
2.2	NONFLAMMABLE GAS.	172.415
2.3	POISON GAS ..	172.416
3 (flammable liquid).	FLAMMABLE LIQUID.	172.419
Combustible liquid.	(None)	.....
4.1	FLAMMABLE SOLID.	172.420
4.2	SPONTANEOUSLY COMBUSTIBLE.	172.422
4.3	DANGEROUS WHEN WET.	172.423
5.1	OXIDIZER	172.426
5.2	ORGANIC PEROXIDE.	172.427
6.1 (Packing Group I, Zone A and B).	POISON INHALATION HAZARD.	172.429

Hazard class or division	Label name	Label design or section reference
6.1 (Packing Groups I and II, other than inhalation hazard).	POISON	172.430
6.1 (Packing Group III).	KEEP AWAY FROM FOOD.	172.431
6.2	INFECTIOUS SUBSTANCE[1].	172.432
7 (see § 172.403).	RADIOACTIVE WHITE–I.	172.436
7	RADIOACTIVE YELLOW–II.	172.438
7	RADIOACTIVE YELLOW–III.	172.440
7 (empty packages, see § 173.427).	EMPTY	172.450
8	CORROSIVE	172.442
9	CLASS 9	172.446

[1] The ETIOLOGIC AGENT label specified in regulations of the Department of Health and Human Services at 42 CFR 72.3 may apply to packages of infectious substances.

14. Section 172.416 would be revised to read as follows:

§ 172.416 POISON GAS label.

(a) Except for size and color, the POISON GAS label must be as follows:

BILLING CODE 4910–60–P

BILLING CODE 4910–60–C

(b) In addition to complying with § 172.407, the background on the POISON GAS label and the symbol must be white. The background of the upper diamond must be black and the lower point of the upper diamond must be 14 mm (0.54 inches) above the horizontal center line.

15. Section 172.429 would be added to read as follows:

§ 172.429 POISON INHALATION HAZARD label.

(a) Except for size and color, the POISON INHALATION HAZARD label must be as follows:

BILLING CODE 4910–60–P

BILLING CODE 4910–60–C

(b) In addition to complying with § 172.407, the background on the POISON INHALATION HAZARD label and the symbol must be white. The background of the upper diamond must be black and the lower point of the upper diamond must be 14 mm (0. 54 inches) above the horizontal center line.

16. In § 172.502, paragraph (a)(2) would be revised and paragraph (b)(3) would be added to read as follows:

§ 172.502 Prohibited and permissive placarding.

(a) * * *

(2) Any sign, advertisement, slogan (such as "Drive Safely"), or other device that, by its color, design, shape or content, could be confused with any placard prescribed in this subpart.

(b) * * *

(3) The restrictions in paragraph (a)(2) of this section do not apply until October 1, 1997 to a safety sign or safety slogan (e.g., "Drive Safely" or "Drive Carefully"), which was permanently marked, on or before October 1, 1994, on a transport vehicle, bulk packaging, or freight container.

* * * * *

17. In § 172.504, paragraph (f)(11) would be added, the heading and introductory text to paragraph (c) would be revised, and paragraphs (b), (c)(1), and (e) would be revised to read as follows:

§ 172.504 General placarding requirements.

* * * * *

(b) *DANGEROUS placard.* A freight container, unit load device, or transport vehicle, which contains non-bulk packages with two or more categories of hazardous materials that require different placards specified in Table 2 of paragraph (e) of this section, may be placarded with DANGEROUS placards instead of the separate placarding specified for each of the materials in Table 2 of paragraph (e) of this section. However, when 1000 kg (2,205 pounds) aggregate gross weight or more of one category of material is loaded therein at one loading facility on a freight container, unit load device, or transport vehicle, the placard specified in Table 2 of paragraph (e) of this section for that category must be applied.

(c) *Exception for 400 kg (882 pounds) or less.* Except for bulk packagings and hazardous materials subject to § 172.505, when hazardous materials covered by Table 2 of paragraph (e) of this section are transported by highway or rail, placards are not required on—

(1) A transport vehicle or freight container which contains 400 kg (882 pounds) or less aggregate gross weight of hazardous materials covered by Table 2 of paragraph (e) of this section; or

* * * * *

(e) *Placarding tables.* Placards are specified for hazardous materials in accordance with the following tables:

Category of material (hazard class or division number and additional description, as appropriate)	Placard name	Placard design section reference (§)
1.1	EXPLOSIVES 1.1.	172.522
1.2	EXPLOSIVES 1.2.	172.522
1.3	EXPLOSIVES 1.3.	172.522
2.3	POISON GAS	172.540
4.3	DANGEROUS WHEN WET.	172.548
5.2 (Organic peroxide, Type B, liquid or solid, temperature controlled).	ORGANIC PEROXIDE.	172.552
6.1 (PG I, inhalation hazard, Zone A and B).	POISON INHALATION HAZARD.	172.555
7 (Radioactive Yellow III label only).	RADIOACTIVE[1]	172.556

[1] RADIOACTIVE placard also required for exclusive use shipments of low specific activity material in accordance with § 173.425(b) or (c) of this subchapter.

TABLE 2

Category of material (hazard class or division number and additional description, as appropriate)	Placard name	Placard design section reference (§)
1.4	EXPLOSIVES 1.4.	172.523
1.5	EXPLOSIVES 1.5.	172.524
1.6	EXPLOSIVES 1.6.	172.525
2.1	FLAMMABLE GAS.	172.532
2.2	NON-FLAMMABLE GAS.	172.538
3	FLAMMABLE	172.542
Combustible liquid.	COMBUSTIBLE	172.544
4.1	FLAMMABLE SOLID.	172.546
4.2	SPONTANEOUSLY COMBUSTIBLE.	172.547
5.1	OXIDIZER	172.550
5.2 (Other than organic peroxide, Type B, liquid or solid, temperature controlled).	ORGANIC PEROXIDE.	172.552
6.1 (PG I or II, other than PG I inhalation hazard).	POISON	172.554
6.1 (PG III)	KEEP AWAY FROM FOOD.	172.553
6.2	(None)	
8	CORROSIVE	172.558
9	CLASS 9	172.560
ORM–D	(None)	

(f) * * *

(11) For domestic transportation, a POISON placard is not required on a transport vehicle or freight container required to display a POISON INHALATION HAZARD or POISON GAS placard.

* * * * *

18. In § 172.505, paragraph (a) would be revised to read as follows:

§ 172.505 Placarding for subsidiary hazards.

(a) Each transport vehicle, freight container, portable tank or unit load device that contains a poisonous material subject to the "Poison-Inhalation Hazard" shipping description of § 172.203(m)(3) must be placarded with a POISON INHALATION HAZARD or POISON GAS placard, as appropriate, on each side and each end, in addition to any other placard required for that material in § 172.504. Duplication of the POISON INHALATION HAZARD or POISON GAS placard is not required.

* * * * *

§ 172.510 [Amended]

19. In § 172.510, the following changes would be made:

a. In paragraph (a)(2), the words "POISON GAS or POISON" would be replaced with the words "POISON GAS or POISON INHALATION HAZARD".

b. In paragraph (a)(3), the term "POISON-RESIDUE" would be replaced by the words "POISON INHALATION HAZARD-RESIDUE".

c. Paragraph (d) would be removed and reserved.

d. In paragraph (e), the words "POISON GAS or POISON" would be replaced by the words "POISON GAS or POISON INHALATION HAZARD".

20. Section 172.540 would be revised to read as follows:

§ 172.540 POISON GAS placard.

(a) Except for size and color, the POISON GAS placard must be as follows:

BILLING CODE 4910–60–P

BILLING CODE 4910–60–C

(b) In addition to complying with § 172.519, the background on the POISON GAS placard and the symbol must be white. The background of the upper diamond must be black and the lower point of the upper diamond must be 38 mm (1–1/2 inches) above the horizontal center line. The text, class number, and inner border must be black.

21. Section 172.555 would be added to read as follows:

§ 172.555 POISON INHALATION HAZARD placard.

(a) Except for size and color, the POISON INHALATION HAZARD placard must be as follows:

BILLING CODE 4910–60–p

BILLING CODE 4910–60–C

(b) In addition to complying with § 172.519, the background on the POISON INHALATION HAZARD placard and the symbol must be white. The background of the upper diamond must be black and the lower point of the upper diamond must be 38 mm (1–1/2 inches) above the horizontal center line. The text, class number, and inner border must be black.

22. In § 172.602, the introductory text to paragraph (c) and paragraph (c)(1) would be revised to read as follows:

§ 172.602 Emergency response information.

* * * * *

(c) *Maintenance of information.* Emergency response information shall be made readily available to authorities, including emergency response personnel, in the event of an accident, incident involving hazardous materials, or inspection and must be maintained as follows:

(1) *Carriers.* Each carrier who transports a hazardous material shall maintain the information specified in paragraph (a) of this section and § 172.606 in the same manner as prescribed for shipping papers, except that the information must be maintained in the same manner aboard aircraft as the notification of pilot-in-command, and aboard vessels in the same manner as the dangerous cargo manifest. This information must be immediately accessible to train crew personnel, drivers of motor vehicles, flight crew members, and bridge personnel on vessels for use in the event of incidents involving hazardous materials.

* * * * *

23. Section 172.606 would be added to read as follows:

§ 172.606 Carrier information contact.

Each carrier who transports or accepts a hazardous material for which shipping papers are required for transportation—

(a) Shall instruct the operator of a motor vehicle, train, aircraft, or vessel to contact the carrier (e.g., by telephone or mobile radio) in the event of an accident or incident involving hazardous materials.

(b) For a transport vehicle for which shipping papers are required which is separated from its motive power and parked at other than a consignee's, consignor's, or carrier's facility shall—

(1) Meet the emergency response information requirements for facility operators specified in § 172.602(c)(1);

(2) Mark the transport vehicle with the telephone number of the motor carrier on the front of the transport vehicle near the electrical equipment and brake hose connections; or

(3) Have the shipping papers and emergency response information readily available on the transport vehicle.

PART 173—SHIPPERS—GENERAL REQUIREMENTS FOR SHIPMENTS AND PACKAGINGS

24. The authority citation for Part 173 would continue to read as follows:

Authority: 49 App. U.S.C. 1803, 1804, 1805, 1806, 1807, 1808, 1817; 49 CFR Part 1, unless otherwise noted.

25. Section 173.9 would be revised to read as follows:

§ 173.9 Transport vehicles or freight containers containing lading which has been fumigated.

(a) For the purpose of this section, a rail car, freight container, truck body, or trailer in which the lading has been fumigated with any material, or is undergoing fumigation, is a package containing a hazardous material, unless the transport vehicle or freight container has been sufficiently aerated so that it does not pose an unreasonable risk to health and safety or property.

(b) No person may offer for transportation or transport a rail car, freight container, truck body, or trailer in which the lading has been fumigated or treated with any material, or is undergoing fumigation, unless the FUMIGANT marking specified in paragraph (c) of this section is prominently displayed so that it can be seen by any person attempting to enter the interior of the transport vehicle or freight container. For domestic transportation, a hazard warning label authorized by EPA under 40 CFR part 156 may be used as an alternative to the FUMIGANT marking.

(c) *FUMIGANT marking.* (1) The FUMIGANT marking must consist of red letters on a white background that is at least 30 cm (11.8 inches) wide and at least 25 cm (9.8 inches) high. Except for size and color, the FUMIGANT marking must be as follows:

BILLING CODE 4910–60–P

DANGER

THIS UNIT IS UNDER FUMIGATION

WITH *_____ APPLIED ON

Date_____

Time_____

DO NOT ENTER

(2) The "*" shall be replaced with the technical name of the fumigant.

(d) No person may affix or display on a rail car, freight container, truck body, or trailer (a package) the FUMIGANT marking specified in paragraph (c) of this section, unless the lading has been fumigated or is undergoing fumigation.

(e) No person may offer for transportation or transport a rail car, freight container, truck body, or trailer which displays the FUMIGANT marking following:

(1) Unloading of the fumigated lading.

(2) Sufficient aeration of the transport vehicle or freight container to assure that it does not pose an unreasonable risk to health and safety or property.

(f) For international shipments, transport documents should indicate the date of fumigation, type and amount of fumigant used, and instructions for disposal of any residual fumigant, including fumigation devices.

(g) Any person that offers for transportation or transports a rail car, freight container, truck body, or trailer that is subject to the HMR solely because of the hazardous materials designation specified in paragraph (a) of this section is not subject to any requirements of this subchapter, except:

(1) The requirements of this section; and

(2) Training requirements specified in Subpart H of Part 172 of this subchapter.

26. In § 173.29, paragraph (b)(1) would be revised to read as follows:

§ 173.29 Empty packagings.

* * * * *

(b) * * *

(1) Any hazardous material shipping name and identification number markings, any hazard warning labels or placards, and any other markings indicating that the material is hazardous (*e.g.*, RQ, INHALATION HAZARD) are removed, obliterated, or securely covered in transportation. This provision does not apply to transportation in a transport vehicle or a freight container if the packaging is not visible during transportation and the

packaging is loaded by the shipper and unloaded by the shipper or consignee;

* * * * *

PART 174—CARRIAGE BY RAIL

27. The authority citation for Part 174 would continue to read as follows:

Authority: 49 App. U.S.C. 1803, 1804, 1808; 49 CFR 1.53(e), 1.53, App. A to Part 1.

28. In paragraph (a)(2) of § 174.25, the placard endorsement table would be revised to read as follows:

§ 174.25 Additional information on waybills, switching orders and other billings.

(a) * * *

(2) * * *

Class/Division	Placard notation	Placard endorsement
Division 1.1	Placarded EXPLOSIVES 1.1 [1].	Explosives.
Division 1.2	Placarded EXPLOSIVES 1.2 [1].	Explosives.
Division 1.1 or 1.2, and Div. 2.3 [2] (chemical ammunition).	Placarded EXPLOSIVES 1.1 or EXPLOSIVES 1.2, and POISON GAS [1].	Explosives and poison gas.
Diivision 1.3	Placarded EXPLOSIVES 1.3.	Dangerous.
Division 1.4	Placarded EXPLOSIVES 1.4.	Dangerous.
Division 1.5	Placarded EXPLOSIVES 1.5.	Dangerous.
Division 1.6	Placarded EXPLOSIVES 1.6.	(None).
Division 2.1	Placarded FLAMMABLE GAS.	Dangerous.
Division 2.2	Placarded NONFLAMMABLE GAS.	Dangerous.
Division 2.3 Zone A [2].	Placarded POISON GAS.[1].	Poison gas Zone A.
Division 2.3 (other than Zone A).	Placarded POISON GAS.	Dangerous.
Class 3	Placarded FLAMMABLE.	Dangerous.
Combustible liquid.	Placarded COMBUSTIBLE.	(None).
Division 4.1	Placarded FLAMMABLE SOLID.	Dangerous.
Division 4.2	Placarded SPONTANEOUSLY COMBUSTIBLE.	Dangerous.
Division 4.3	Placarded DANGEROUS WHEN WET.	Dangerous.
Division 5.1	Placarded OXIDIZER.	Dangerous.
Division 5.2	Placarded ORGANIC PEROXIDE.	Dangerous.
Division 6.1 PG I Zone A [2].	Placarded POISON INHALATION HAZARD [1].	Poison PG I Zone A.
Division 6.1 PG I Zone B [2].	Placarded POISON INHALATION HAZARD.	Poison PG I Zone B.
Division 6.1 PG I and II (other than PG 1 Zone A and B).	Placarded POISON.	Dangerous.
6.1 (PG III) ..	Placarded KEEP AWAY FROM FOOD.	(None).
Class 7	Placarded RADIOACTIVE.	Radioactive material.
Class 8	Placarded CORROSIVE.	Dangerous.
Class 9	Placarded CLASS 9.	(None).
ORM–D	(None)	(None).
Mixed loads of hazardous materials placarded DANGEROUS.	Placarded DANGEROUS.	Dangerous.
Tank cars which contain a residue of a hazardous mateial other than a combustible liquid.	See § 174.25(c).	Dangerous.
Tank cars which contain a residue of a combustible liquid, a residue of a 6.1 PG III material, or a residue of a Class 9 material.	See § 174.25(c).	(None).

[1] Use of square background required (See § 172.510(a) of this subchapter).

[2] Identified as required in § 172.203(m)(3) of this subchapter.

* * * * *

29. Section 174.26, would be revised to read as follows:

§ 174.26 Notice to train crews of placarded cars.

(a) At each terminal or other place where trains are made up or switched by crews other than train crews accompanying the outbound movement of cars, the carrier shall execute consecutively numbered notices showing the location in each train of each rail car placarded EXPLOSIVES 1.1 or 1.2 (EXPLOSIVES A), POISON GAS (Division 2.3, Hazard Zone A only) or POISON INHALATION HAZARD (Division 6.1, PG I, Hazard Zone A only) on a square background. A copy of each notice must be delivered to the train and engine crew concerned, and a copy thereof showing delivery to the train and engine crew must be kept on file by the carrier at each point where the notice is given. At points where train or engine crews are changed, the notice must be transferred from crew to crew. See paragraph (b) of this section for other placarded cars.

(b) The train crew must have a document that reflects the current position in the train of each rail car containing a hazardous material. An updated train consist may be used to meet this requirement.

(c) A member of the train crew of a train transporting a hazardous material shall possess a copy of the shipping papers for the shipment of hazardous materials being transported showing the information required by §§ 172.202 and 172.203 and § 172.602 of this subchapter. The shipping paper information must be made readily available to authorities, including emergency response personnel, in the event of an accident, incident involving the hazardous materials, or inspection.

30. In § 174.680, paragraph (a) would be revised to read as follows:

§ 174.680 Division 6.1 (poisonous) materials with foodstuffs.

(a) A carrier may not transport any package bearing a POISON or POISON INHALATION HAZARD label in the same car with any material marked as or known to be a foodstuff, feed, or any other edible material intended for consumption by humans or animals.

* * * * *

PART 175—CARRIAGE BY AIRCRAFT

31. The authority citation for Part 175 would continue to read as follows:

Authority: 49 App. U.S.C. 1803, 1804, 1807, 1808, 49 CFR Part 1.

32. In § 175.33, the first sentence of paragraph (b) would be revised to read as follows:

§ 175.33 Notification of pilot-in-command.

* * * * *

(b) A copy of the written notification of pilot-in-command shall be readily available to the pilot-in-command during flight and a copy must be made readily available to authorities, including emergency response personnel, in the event of an accident, incident involving the hazardous material, or inspection. * * *

33. Section 175.630 would be revised to read as follows:

§ 175.630 Special requirements for Division 6.1 (poisonous) material and Division 6.2 (infectious substance) material.

(a) A hazardous material bearing a POISON, POISON INHALATION HAZARD, KEEP AWAY FROM FOOD, or INFECTIOUS SUBSTANCE label may not be carried in the same compartment of an aircraft with material which is marked as or known to be a foodstuff, feed, or any other edible material intended for consumption by humans or animals unless either the Division 6.1 (poisonous) material or material in Division 6.2 (infectious substance) and the foodstuff, feed, or other edible material are loaded in separate unit load devices which, when stowed on the aircraft, are not adjacent to each other, or the Division 6.1 (poisonous) material or material in Division 6.2 (infectious substance) are loaded in one closed unit load device and the foodstuff, feed or other material is loaded in another closed unit load device.

(b) No person may operate an aircraft that has been used to transport any package bearing a POISON or POISON INHALATION HAZARD label unless, upon removal of such package, the area in the aircraft in which it was carried is visually inspected for evidence of leakage, spillage, or other contamination. All contamination discovered must be either isolated or removed from the aircraft. The operation of an aircraft contaminated with such Division 6.1 (poisonous) materials is considered to be the carriage of poisonous materials under paragraph (a) of this section.

PART 176—CARRIAGE BY VESSEL

34. The authority citation for Part 176 would continue to read as follows:

Authority: 49 App. U.S.C. 1803, 1804, 1805, 1808; 49 CFR Part 1.53. App. A to Part 1.

35. In § 176.30, the third sentence of paragraph (a) introductory text would be revised to read as follows:

§ 176.30 Dangerous cargo manifest.

(a) * * * This document must be kept in a designated holder on or near the vessel's bridge and must be made readily available to authorities, including emergency response personnel, in the event of an accident, incident involving materials listed on the manifest, or inspection. * * *

* * * * *

36. In § 176.600, paragraph (a) would be revised to read as follows:

§ 176.600 General stowage requirement.

(a) Each package required to have a POISON GAS, POISON INHALATION HAZARD, or POISON label thereon being transported on a vessel must be stowed clear of living quarters and any ventilation ducts serving living quarters and separate from foodstuffs.

* * * * *

PART 177—CARRIAGE BY PUBLIC HIGHWAY

37. The authority citation for Part 177 would continue to read as follows:

Authority: 49 App. U.S.C. 1803, 1804, 1805; 49 CFR Part 1.

§ 177.817 [Amended]

38. In the introductory text of paragraph (e) of § 177.817, the phrase "authorities in the event of accident or inspection." would be replaced with the phrase "authorities, including emergency response personnel, in the event of accident, incident involving a hazardous material, or inspection.".

39. In § 177.841, paragraph (e) introductory text would be republished and paragraphs (e)(1) and (e)(2) would be revised to read as follows:

§ 177.841 Division 6.1 (poisonous) and Division 2.3 (poisonous gas) materials.

* * * * *

(e) A motor carrier may not transport a package:

(1) Bearing a POISON or POISON INHALATION HAZARD label in the same motor vehicle with material that is marked as or known to be a foodstuff, feed or edible material intended for consumption by humans or animals unless the inside package is overpacked in a liquid-tight and dust proof container identified as package 4000 in the National Motor Freight Classification 100–1 or is overpacked in a metal drum as specified in § 173.25(c) of this subchapter;

(2) Bearing or required to bear a POISON, POISON GAS or POISON INHALATION HAZARD label in the driver's compartment (including a sleeper berth) of a motor vehicle; or

* * * * *

Issued in Washington, DC on August 4, 1994, under authority delegated in 49 CFR Part 106, Appendix A.

Alan I. Roberts,

Associate Administrator for Hazardous Materials Safety.

[FR Doc. 94–19490 Filed 8–12–94; 8:45 am]

BILLING CODE 4910–60–P

federal register

Monday
August 15, 1994

Part IV

Department of Labor

Office of the Secretary
Employment and Training Administration

20 CFR Part 655
29 CFR Parts 18 and 24
Amendment of Filing and Service Requirements in Proceedings Before the Office of Administrative Law Judges; Interim Final Rule

DEPARTMENT OF LABOR

Office of the Secretary

Employment and Training Administration

20 CFR 655

29 CFR Part 18 and 24

Amendment of Filing and Service Requirements in Proceedings Before the Office of Administrative Law Judges

AGENCY: Office of the Secretary, Labor.

ACTION Interim final rule; request for comments.

SUMMARY: Interim final rule amends regulations governing the filing and service of documents in proceedings before the Department of Labor's Office of Administrative Law Judges generally, and in one instance, the Regional Administrator's service of a notice of denial of temporary labor certification. The amendments modify regulations which heretofore required filing or service by mailgram or telegram, substituting therefore the option to file or serve those documents by facsimile (fax), telegram or other means normally assuring next day delivery. The amendments also provide guidelines for the filing and service of documents by facsimile, *limiting such filings to instances when they are explicitly permitted by statute or regulation, or by the presiding administrative law judge.* Finally, the amendments eliminate the routine filing of documents relating to discovery, limiting such filings to instances when there is a reason for their submission.

DATES:

Effective Date: This interim rule is effective September 14, 1994.

Comments: Comments on the interim rule shall be submitted by mail and must be received by October 14, 1994 to ensure consideration.

ADDRESSES: Send comments to John M. Vittone, Deputy Chief Administrative Law Judge, Room 4250, Office of Administrative Law Judges, 800 K Street, NW., Suite 400, Washington, DC 20001–8002.

FOR FURTHER INFORMATION CONTACT: John M. Vittone, Deputy Chief Administrative Law Judge, Office of Administrative Law Judges. Telephone: (202) 633–0341.

SUPPLEMENTARY INFORMATION:

Purpose of Amendments

These amendments are grounded in the notion that procedural regulations should reflect practical realities. In today's business world, when a document needs to be delivered quickly, overnight couriers and facsimile transmissions are extremely effective methods. Thus, in programs administered by the Department of Labor when speedy filing or service of a document is essential, the amendments permitting the use of facsimile or overnight couriers conform the regulations to modern business practice.

On the other hand, given the large number of cases docketed by the Office of Administrative Law Judges each year, the use of facsimile—although often convenient to parties—is not administratively practical for routine matters. The Department generally agrees with the Judicial Conference Guidelines for Filing by Facsimile Transmission, which are referenced by Rule 5 of the Federal Rules of Civil Procedure. *See* Malkin, *Judicial Conference Guidelines For Filing By Facsimile Transmission*, Court Administration Bulletin (Dec. 1991). The Judicial Conference concluded that "basic facsimile technology has not reached a level that would allow for routine filing by facsimile without placing an undue administrative and resource burden on the courts." *Id.* Practical concerns noted by the Judicial Conference included technical problems with facsimile transmissions, the cost of equipment and supplies, and the burden on administrative staff.

When filing or service is routine, regular mail usually is sufficient. Even when time is of the essence, an overnight courier normally provides an adequate means of filing a document quickly. Thus, these amendments limit the use of facsimile to file documents to those instances in which such a filing is explicitly permitted by statute or regulations (*see, e.g.*, 20 CFR 655.820(e), 655.1020(d); 29 CFR 506.630(e), 507.820(e), 508.1020(d)) or by the presiding administrative law judge. In designing the amendments to govern filings by facsimile, the Department has taken into consideration the practice of the federal courts (*see* Fed. R. App. P. 25 and Fed. R. Civ. P. 5), the rules of other federal agencies (*see, e.g.*, 29 CFR Part 102.114 (NLRB); 29 CFR 2200.9(f) (OSHA); 34 CFR Parts 76, 81, 86, 218, 222, 300, 361, 581 (DOE); 49 CFR 1162.2(e)(3) (ICC)), the rules of assorted state courts (*see, e.g.*, Ark. Code § 16–20–109; Cal Rules of Court R 2010, 2005, 2009; La R.S. 13:850; Tenn Code Ann. § 16–3–408) and various legal commentary (*see, e.g.*, Malkin, *Judicial Conference Guidelines For Filing By Facsimile Transmission*, Court Administration Bulletin (Dec. 1991); Koenig, *Courts in the Fax Lane: The Use of Facsimile Technology by State Courts*, 14 State Court Journal 13 (Winter 1991); *Study Shows Limited Fax Use By Majority of State Courts*, The National L.J., Oct. 8, 1990, at 17; Note, *Telefacsimile Documents: A Survey of Uses in the Legal Setting*, 36 The Wayne L. Rev. 1361 (1990)).

Finally, the amendments include elimination of routine filing of discovery documents. As a practical matter, such documents are generally not needed for the administrative record unless a party submits them in support of a motion (*e.g.* a motion to compel attendance at a deposition) or the document is being submitted as evidence. The present system of routinely filing copies of such documents with the presiding administrative law judge only results in an administrative record cluttered with unneeded papers.

Rules of Special Application

These amendments do not purport to cover all rules of special application governing the conduct of hearings before the Office of Administrative Law Judges under specific Department of Labor programs. At least some rules of special application contain service and filing requirements that are inconsistent with these amendments. For example, the Office of Federal Contract Compliance Programs' rules at 41 CFR 60–30.4 (a) and (b) require the filing of all litigation documents with the Office of Administrative Law Judges, including documents relating to discovery, and specify that parties shall serve and file litigation documents by personal delivery or mail. *Rules of special application control to the extent that the general rules of practice and procedure found in 29 CFR Part 18 are inconsistent. See* 29 CFR 18.1(a).

Technical Comments

Most of the amendments simply replace a telegram requirement with less restrictive language. Less obvious changes, however, are discussed below.

The amendment to 20 CFR 655.212 deletes "by telegram." Not only was this phrase unnecessary, it was also inappropriate for several sections such as 655.211, which do not set time frames or other procedures for requesting a review. The amendment to 20 CFR 655.212 also corrects the spelling of "countervailing."

The new paragraph (f) to 29 CFR 18.3 governs filing or service by facsimile. It permits such a filing when explicitly permitted by statute or regulation or when directed or permitted by the

presiding administrative law judge. The presiding judge's discretion to direct or permit a filing by facsimile permits flexibility in application, although it is contemplated that filing by facsimile generally will be limited to emergency situations or other compelling circumstances. Nevertheless, *litigants should note that permission to file by facsimile must be obtained, and those who choose to file by facsimile without permission do so at the risk that the filing will not be recognized.*

Subparagraph (f)(4) requires the use of a cover sheet identifying the sender. This requirement reflects fax etiquette, but more importantly, it is helpful if the transmission is bad.

Subparagraph (f)(5) governs the submission of original documents. Although many fax rules contemplate having the original document sent within a few days following a fax transmission, the Department believes that this approach only doubles the amount of paper that must be processed. Thus, this rule requires submission of the original only when so ordered by the presiding administrative law judge, in the event of an original signature requirement, or in disputes over the accuracy of the transmission or the authenticity of the document. The ten day requirement for filing a required original signature conforms the rule to the new attestation regulations. *See, e.g.*, 20 CFR 655.1020.

Subparagraph (f)(6) limits the length of filings by facsimile, although the presiding judge has the discretion to permit a longer filing. In addition, length is not regulated when it is subject to a requirement over which the transmitting party has no control, such as a requirement to file a complaint or determination letter. Long documents hold up fax machines, use government paper (not an inconsequential consideration for an agency that regularly dockets 9,000 cases a year), and extend wear and tear to the mechanical parts of the machine.

Subparagraph (f)(7) indicates that filings by facsimile should normally be done during regular business hours. Fax machines are not monitored at night. This paragraph, however, is directory rather than mandatory, since a blanket prohibition on filing during nonbusiness hours would defeat much of the utility of facsimile machines.

In *Prince* v. *Poulas*, 876 F.2d 30 (5th Cir. 1989), the Fifth Circuit held that an overnight courier service is not a public authority, and therefore not a form of "mail" for purposes of Rule 25 of the Federal Rules of Appellate Procedure. The experience of the Office of Administrative Law Judges, however, has been that overnight courier services are generally reliable and do not present some of the administrative and legal problems presented by filing by facsimile. Thus, paragraph (g) has been added to Part 18 of Title 29 to designate use of courier service as the equivalent of regular mail for purposes of Part 18.

Paragraph (d) is being added to section 18.4 to govern the time a filing or service by facsimile is effective. Using the time printed by the receiving fax machine as the date stamp lessens the need for monitoring of the fax machine and saves one step in the filing process.

Recently, amendments to 29 CFR Part 24 were published for notice and comment. *See* 59 Fed. Reg. 12506 (1994). Those proposed amendments include changes to 29 CFR 24.4 (which will be renumbered as section 24.5) that permit the filing of a request for a hearing in an employee protection proceeding by "facsimile (fax), telegram, hand delivery, or next-day delivery service". 51 Fed. Reg. at 12509. Presently, section 24.4 only authorizes filing of the request by telegram. In addition, the proposed regulatory amendments require the party requesting a hearing to send a copy of the request to the opposing party and the Administrator by "facsimile (fax), telegram, hand delivery, or next-day delivery service". *Id.* Many other changes to Part 24 are also made in the March 16, 1994 Notice of proposed rulemaking. As a temporary measure, the instant interim final rule incorporates the proposed changes to section 24.4 that provide for alternatives to filing by telegram and that require same day notice of the request to the opposing party and the Administrator.

Publication as Interim Final Rule

These amendments are being issued as interim final rules because they are rules of agency procedure and practice for which notice and comment is not required, see 5 U.S.C. 553(b)(A).

Procedural Matters

This is not a significant regulatory action as defined by Executive Order 12866. The Agency Head has certified that this rule, if promulgated, will not have a significant economic impact upon a substantial number of small entities as defined in the Regulatory Flexibility Act (5 U.S.C. 601 et seq.). The rule does not contain any information collection or recordkeeping requirements as defined in the Paperwork Reduction Act of 1980 (44 U.S.C. 3501 et seq.).

List of Subjects

20 CFR Part 655

Administrative practice and procedure, Aliens, Employment, Migrant labor.

29 CFR Part 18

Administrative practice and procedure.

29 CFR Part 24

Employment, Environmental protection.

Accordingly, Part 655 of Title 20, and Part 18 and Part 24 of Title 29 of the Code of Federal Regulations are amended as follows:

TITLE 20—EMPLOYEES' BENEFITS

PART 655—TEMPORARY EMPLOYMENT OF ALIENS IN THE UNITED STATES

1. The authority citation for Part 655 continues to read:

Authority: Section 655.0 issued under 8 U.S.C. 1101(a)(15)(H)(i) and (ii), 1182(m) and (n), 1184, 1188, and 1288(c); 29 U.S.C. 49 *et seq.*; 3(c)(1), Pub. L. 101–238, 103 Stat. 2099, 2103 (8 U.S.C. 1182 note); sec. 221(a), Pub. L. 101–649, 104 Stat. 4978, 5027 (8 U.S.C. 1184 note); and 8 CFR 214.2(h)(4)(i).

Section 665.00 issued under 8 U.S.C. 1101(a)(15)(h)(ii), 1184, and 1188; 29 U.S.C. 49 *et seq.*; and 8 CFR 214.2(h)(4)(i).

Subparts A and C issued under 8 U.S.C. 1101(a)(15)(H)(ii)(b) and 1184; 29 U.S.C. 49 *et seq.*; and 8 CFR 214.2(h)(4)(i).

Subpart B issued under 8 U.S.C. 1101(a)(15)(H)(ii)(a), 1184, and 1188; and 29 U.S.C. 49 *et seq.*

Subparts D and E issued under 8 U.S.C. 1101(a)(15)(H)(i)(a), 1182(m) and 1184, 29 U.S.C. 49 *et seq.*; and sec. 3(c)(1), Pub. L. 101–238, 103 Stat. 2099, 2103 (8 U.S.C. 1182 note).

Subparts F and G issued under 8 U.S.C. 1184 and 1288(c); and 29 U.S.C. 49 *et seq.*

Subparts H and I issued under 8 U.S.C. 1101(a)(15)(H)(i)(b), 1182(n), and 1184; and 29 U.S.C. 49 *et seq.*

Subparts J and K issued under 29 U.S.C. 49 *et seq.*; and sec. 221(a), Pub. L. 101–649, 104 Stat. 4978, 5027 (8 U.S.C. 1184 note).

2. In § 655.104, paragraph (c)(3) is revised to read as follows:

§ 655.104 Determinations based on acceptability of H–2A applications.

* * * * *

(c) * * *

(3) Offer the applicant an opportunity to request an expedited administrative review of or a *de novo* administrative hearing before an administrative law judge of the nonacceptance; the notice shall state that in order to obtain such a review or hearing, the employer, within seven calendar days of the date of the notice, shall file by facsimile

(fax), telegram, or other means normally assuring next day delivery a written request to the Chief Administrative Law Judge of the Department of Labor (giving the address) and simultaneously serve a copy on the RA; the notice shall also state that the employer may submit any legal arguments which the employer believes will rebut the basis of the RA's action; and

* * * * *

3. Section 655.112 is amended by revising paragraphs (a)(2) and (b)(2) to read as follows:

§ 655.112 Administrative review and de novo hearing before an administrative law judge.

(a) * * *

(2) *Decision.* Within five working days after receipt of the case file the administrative law judge shall, on the basis of the written record and after due consideration of any written submissions submitted from the parties involved or *amici curiae,* either affirm, reverse, or modify the RA's denial by written decision. The decision of the administrative law judge shall specify the reasons for the action taken and shall be immediately provided to the employer, RA, the Director, and INS by means normally assuring next-day delivery. The administrative law judge's decision shall be the final decision of the Secretary and no further review shall be given to the temporary alien agricultural labor certification application or the temporary alien agricultural labor certification determination by any DOL official.

(b) * * *

(2) *Decision.* After a *de novo* hearing, the administrative law judge shall either affirm, reverse, or modify the RA's determination, and the administrative law judge's decision shall be provided immediately to the employer, RA, Director, and INS by means normally assuring next-day delivery. The administrative law judge's decision shall be the final decision of the Secretary, and no further review shall be given to the temporary alien agricultural labor certification application or the temporary alien agricultural labor certification determination by any DOL official.

4. In § 655.204, paragraph (d)(2) is revised to read as follows:

§ 655.204 Determinations based on temporary labor certification applications.

* * * * *

(d) * * *

(2) Offer the employer an opportunity to request an expedited administrative-judicial review of the denial by a Department of Labor (DOL) Hearing Officer. The notice shall state that in order to obtain such a review, the employer must, within five calendar days of the date of the notice, file by facsimile (fax), telegram, or other means normally assuring next day delivery a written request for such a review to the Chief Administrative Law Judge of the Department of Labor (giving the address) and simultaneously serve a copy on the Regional Administrator. The notice shall also state that the employer's request for review should contain any legal arguments which the employer believes will rebut the basis of the RA's denial of certification; and

* * * * *

5. In § 655.206, paragraph (c) is revised to read as follows:

§ 655.206 Determinations of U.S. worker availability and adverse effect on U.S. workers.

* * * * *

(c) If the RA denies the temporary labor certification in whole or part, the RA shall notify the employer in writing by means normally assuring next-day delivery. The notice shall contain all of the statements required in § 655.204(d). If a timely request is made for an administrative-judicial review by a DOL Hearing Officer, the procedures of § 655.212 shall be followed.

* * * * *

6. Section 655.212 is revised to read as follows:

§ 655.212 Administrative-judicial reviews.

(a) Whenever an employer has requested an administrative-judicial review of a denial of an application or a petition in accordance with §§ 655.204(d), 655.205(d), 655.206(c), or 655.211, the Chief Administrative Law Judge shall immediately assign a Hearing Officer to review the record for legal sufficiency, and the Regional Administrator shall send a certified copy of the case file to the Chief Administrative Law Judge by means normally assuring next day delivery. The Hearing Officer shall not have authority to remand the case and shall not receive additional evidence. Any countervailing evidence advanced after decision by the Regional Administrator shall be subject to provisions of 8 CFR 214.2(h)(3)(i).

(b) The Hearing Officer, within five working days after receipt of the case file shall, on the basis of the written record and due consideration of any written memorandums of law submitted, either affirm, reverse or modify the RA's denial by written decision. The decision of the Hearing Officer shall specify the reasons for the action taken and shall be immediately provided to the employer, RA, Administrator, and INS by means normally assuring next-day delivery. The Hearing Officer's decision shall be the final decision of the Department of Labor and no further review shall be given to the temporary labor certification determination by any Department of Labor official.

TITLE 29—LABOR

PART 18—RULES OF PRACTICE AND PROCEDURE FOR ADMINISTRATIVE HEARINGS BEFORE THE OFFICE OF ADMINISTRATIVE LAW JUDGES

7. The authority citation for Part 18 continues to read as follows:

Authority: 5 U.S.C. 301; 5 U.S.C. 551–553; 5 U.S.C. 581; E.O. 12778; 57 Fed. Reg. 7292.

8. Section 18.3 amended by revising paragraph (b) and adding paragraphs (f) and (g) to read as follows:

§ 18.3 Service and filing of documents.

* * * * *

(b) *By parties.* All documents shall be filed with the Office of Administrative Law Judges, except that notices of deposition, depositions, interrogatories, requests for documents, requests for admissions, and answers and responses thereto, shall not be so filed unless the presiding judge so orders, the document is being offered into evidence, the document is submitted in support of a motion or a response to a motion, filing is required by a specialized rule, or there is some other compelling reason for its submission. Service of all documents shall be made upon all parties, and when a party is represented by an attorney or other representative, service also shall be made upon the attorney or representative. Service of any document upon any party may be made by personal delivery or by mailing a copy to the last known address. The person serving the document shall certify to the manner and date of service.

* * * * *

(f) *Filing and service by facsimile.*

(1) *Filing by a party; when permitted.* Filings by a party may be made by facsimile (fax) when explicitly permitted by statute or regulation, or when directed or permitted by the administrative law judge assigned to the case. If prior permission to file by facsimile cannot be obtained because the presiding administrative law judge is not available, a party may file by facsimile and attach a statement of the circumstances requiring that the document be filed by facsimile rather than by regular mail. That statement does not ensure that the filing will be

accepted, but will be considered by the presiding judge in determining whether the facsimile will be accepted *nunc pro tunc* as a filing.

(2) *Service by facsimile; when permitted.* Service upon a party by another party or by the administrative law judge may be made by facsimile (fax) when explicitly permitted by statute or regulation, or when the receiving party consents to service by facsimile.

(3) *Service sheet and proof of service.* Docments filed or served by facsimile (fax) shall include a service sheet which states the means by which filing and/or service was made. A facsimile transmission report generated by the sender's facsimile equipment and which indicates that the transmission was successful shall be presumed adequate proof of filing or service.

(4) *Cover sheet.* Filings or service by facsimile (fax) shall include a cover sheet that identifies the sender, the total number of pages transmitted, and the caption and docket number of the case, if known.

(5) *Originals.* Documents filed or served by facsimile (fax) shall be presumed to be accurate reproductions of the original document until proven otherwise. The party proferring the document shall retain the original in the event of a dispute over authenticity or the accuracy of the transmission. The original document need not be submitted unless so ordered by the presiding judge, or unless an original signature is required by statute or regulation. If an original signature is required to be filed, the date of the facsimile transmission shall govern the effective date of the filing provided that the document containing the original signature is filed within ten calendar days of the facsimile transmission.

(6) *Length of document.* Documents filed by facsimile (fax) should not exceed 12 pages including the cover sheet, the service sheet and all accompanying exhibits or appendices, except that this page limitation may be exceeded if prior permission is granted by the presiding judge or if the document's length cannot be conformed because of statutory or regulatory requirements.

(7) *Hours for filing by facsimile.* Filings by facsimile (fax) should normally be made between 8:00 am and 5:00 pm, local time at the receiving location.

(g) *Filing and service by courier service.* Documents transmitted by courier service shall be deemed transmitted by regular mail in proceedings before the Office of Administrative Law Judges.

9. Section 18.4 is amended by adding paragraph (d) to read as follows:

§ 18.4 Time computations.

* * * * *

(d) *Filing or service by facsimile.* Filing or service by facsimile (fax) is effective upon receipt of the entire document by the receiving facsimile machine. For purposes of filings by facsimile the time printed on the transmission by the facsimile equipment constitutes the date stamp of the Chief Docket Clerk.

10. Section 18.18 is amended by revising paragraph (a) as follows:

§ 18.18 Written interrogatories to parties.

(a) Any party may serve upon any other party written interrogatories to be answered in writing by the party served, or if the party served is a public or private corporation or a partnership or association or governmental agency, by any authorized officer or agent, who shall furnish such information as is available to the party. A copy of the interrogatories, answers, and all related pleadings shall be served on all parties to the proceeding. Copies of interrogatories and responses thereto shall not be filed with the Office of Administrative Law Judges unless the presiding judge so orders, the document is being offered into evidence, the document is submitted in support of a motion or a response to a motion, filing is required by a specialized rule, or there is some other compelling reason for its submission.

* * * * *

11. Section 18.19 is amended by revising paragraph (f) to read as follows:

§ 18.19 Production of documents and other evidence; entry upon land for inspection and other purposes; and physical and mental examination.

* * * * *

(f) A copy of each request for production and each written response shall be served on all parties, but shall not be filed with the Office of Administrative Law Judges unless the presiding judge so orders, the document is being offered into evidence, the document is submitted in support of a motion or a response to a motion, filing is required by a specialized rule, or there is some other compelling reason for its submission.

12. Section 18.20 is amended by revising paragraph (g) to read as follows:

§ 18.20 Admissions.

* * * * *

(g) A copy of each request for admission and each written response shall be served on all parties, but shall not be filed with the Office of Administrative Law Judges unless the presiding judge so orders, the document is being offered into evidence, the document is submitted in support of a motion or a response to a motion, filing is required by a specialized rule, or there is some other compelling reason for its submission.

13. Section 18.22 is amended by revising paragraph (c) to read as follows:

§ 18.22 Depositions.

* * * * *

(c) *Notice.* Notice shall be given for the taking of a deposition, which shall not be less than five (5) days written notice when the deposition is to be taken within the continental United States and not less than twenty (20) days written notice when the deposition is to be taken elsewhere. A copy of the Notice shall not be filed with the Office of Administrative Law Judges unless the presiding judge so orders, the document is being offered into evidence, the document is submitted in support of a motion or a response to a motion, filing is required by a specialized rule, or there is some other compelling reason for its submission.

* * * * *

PART 24—PROCEDURES FOR THE HANDLING OF DISCRIMINATION COMPLAINTS UNDER FEDERAL EMPLOYEE PROTECTION STATUTES

14. The authority citation for Part 24 continues to read as follows:

Authority: 42 U.S.C. 300j–9(i); 33 U.S.C. 1367; 15 U.S.C. 2622; 42 U.S.C. 6971; 42 U.S.C. 7622; 42 U.S.C. 5851.

15. Section 24.4 is amended by revising paragraph (d)(2) (i), (ii), (d)(3) (i) and (ii) to read as follows:

§ 24.4 Investigations.

* * * * *

(d) * * *

(2) * * *

(i) If on the basis of the investigation the Administrator determines that the complaint is without merit, the notice of determination shall include, or be accompanied by notice to the complainant that the notice of determination shall become the final order of the Secretary denying the complaint unless within five calendar days of its receipt the complainant files with the Chief Administrative Law Judge by facsimile (fax), telegram, hand delivery, or next-day delivery service, a request for a hearing on the complaint. The notice shall give the address and the facsimile number of the Chief Administrative Law Judge.

(ii) Copies of any request for a hearing shall be served by the complainant on

the respondent (employer) and on the Administrator on the same day that the hearing is requested by facsimile (fax), telegram, hand delivery, or next-day delivery service.

(3) * * *

(i) If on the basis of the investigation the Administrator determines that the alleged violation has occurred, the notice of determination shall include an appropriate order to abate the violation, and notice to the respondent that the order shall become the final order of the Secretary unless within five calendar days of its receipt the respondent files with the Chief Administrative Law Judge by facsimile (fax), telegram, hand delivery, or next-day delivery service, a request for a hearing. An order issued pursuant to this paragraph (d)(3)(i) shall be in accordance with the relevant provisions of the statute violated. The notice shall give the address and facsimile number of the Chief Administrative Law Judge.

(ii) Copies of any request for a hearing shall be sent by the respondent to the complainant and to the Administrator on the same day that the hearing is requested by facsimile (fax), telegram, hand delivery, or next-day delivery service.

Signed at Washington, D.C. this 8th day of August 1994.

Robert Reich,

Secretary of Labor.

[FR Doc. 94–19703 Filed 8–12–94; 8:45 am]

BILLING CODE 4510–20–M

federal register

Monday
August 15, 1994

Part V

Department of Education

34 CFR Part 364, et al.
Independent Living Services Programs; Final Rule

DEPARTMENT OF EDUCATION

34 CFR Parts 364, 365, 366, and 367

RIN 1820–AB18

Independent Living Services Programs

AGENCY: Department of Education.

ACTION: Final regulations.

SUMMARY: The Secretary issues new regulations and amends existing regulations governing the State Independent Living Services (SILS), Centers for Independent Living (CIL), and Independent Living Services for Older Individuals Who Are Blind (OIB) programs. These regulations are needed to implement Chapters 1 and 2 of Title VII of the Rehabilitation Act of 1973 (Act), as amended.

EFFECTIVE DATE: These regulations take effect either 45 days after publication in the **Federal Register** or later if the Congress takes certain adjournments. If you want to know the effective date of these regulations, call or write the Department of Education contact person. A document announcing the effective date will be published in the **Federal Register.**

FOR FURTHER INFORMATION CONTACT: John Nelson, U.S. Department of Education, 400 Maryland Avenue, S.W., Room 3326, Mary E. Switzer Building, Washington, D.C. 20202–2741. Telephone or TDD: (202) 205–9362.

SUPPLEMENTARY INFORMATION: These regulations add a new Part 364 and revise Parts 365, 366, and 367 of the regulations governing the SILS, CIL, and OIB programs. The Secretary will issue final regulations on Subpart G of Part 366 in a separate notice in the **Federal Register.**

The SILS, CIL, and OIB programs are an important part of the National Education Goals. These programs support the National Education Goal that, by the year 2000, every adult American will be literate and will possess the knowledge and skills necessary to compete in a global economy and exercise the rights and responsibilities of citizenship.

On May 12, 1994, the Secretary published a notice of proposed rulemaking (NPRM) in the **Federal Register** (59 FR 24814) proposing to issue new regulations and to amend existing regulations for the SILS, CIL, and OIB programs. The major issues related to these programs were discussed in the preamble to the NPRM.

In general, the commenters agreed with the NPRM. However, in response to public comments, there are some changes between the NPRM and the final regulations. The final regulations clarify the joint responsibility for the development of the State plan for IL; clarify that a State may submit only one State plan for IL; require a service provider to review a determination that an applicant is ineligible for IL services whenever the service provider determines that the applicant's status has materially changed; add as a selection criterion the extent to which consumers are involved in developing a center's application for a grant; and strengthen a consumer's control over the release of personal information by a service provider.

The final regulations also clarify that an existing center that applies for a grant as a new center by establishing a separate center at a new location does not need to establish a separate governing board for that new center; and impose a deadline of 90 days after the end of the fiscal year for submitting the annual performance report required for continuation funding.

Analysis of Comments and Changes

In response to the Secretary's invitation in the NPRM, 40 parties submitted comments on the proposed regulations. An analysis of the comments and of the changes in the regulations since publication of the NPRM follows. General comments are discussed first, followed by comments on specific sections of the regulations. Technical and other minor changes—and suggested changes the Secretary is not legally authorized to make under the applicable statutory authority—are not addressed.

General Comments

Comments: One commenter suggested that the 30-day comment period on the NPRM be extended.

Discussion: The Secretary considered a 30-day comment period necessary because a longer comment period would not have left enough time to make competitive awards for new centers for independent living (centers) under the CIL program for fiscal year (FY) 1994. The Secretary also considered a 30-day comment period adequate because of the extensive opportunity for input and comment that was afforded to the public prior to publishing the NPRM.

Changes: None.

Comments: Two commenters agreed and two commenters disagreed with changing the term "severe" to "significant." Several commenters approved of the regulations as written, without specifically addressing the change in terms. The remainder of the commenters did not address this issue, although they did address other issues.

Discussion: The Secretary published a notice of proposed rulemaking on the nomenclature change from "severe" to "significant" on October 27, 1993 (58 FR 57938). In its response to that nomenclature NPRM, the independent living (IL) community expressed support for the change. Therefore, the Secretary does not believe a change is necessary.

Changes: None.

Part 364

Definitions (§ 364.4)

Comments: One commenter was concerned that the proposed definition of "advocacy" may be interpreted to mean that only an attorney may be an advocate or representative for a consumer. Another commenter suggested a broader definition of "advocacy" that takes into account different "levels of advocacy."

Discussion: The definition of "advocacy" in these regulations does not require an advocate to be an attorney except in those situations where State law or the rules of an agency require that an advocate representing another individual be an attorney. In addition, the definition of "advocacy" includes "individual advocacy," "systemic advocacy," and "self advocacy," which the Secretary believes are sufficient to encompass all situations.

Changes: None.

Comments: Commenters suggested that the proposed definition of "attendant care" be revised to allow this service to be provided on the job and in the community, as well as at home.

Discussion: The Secretary believes that the definition of "attendant care" provides adequate flexibility to allow attendant care in a variety of situations.

Changes: None.

Comments: Commenters questioned why the words "cognitive" and "sensory" do not appear in the proposed definition of "significant disability." Another commenter suggested deleting the words "cognitive" and "sensory" from the proposed definition of an "individual with a disability" to make this definition consistent with the Americans with Disabilities Act and section 504 of the Act.

Discussion: The Secretary agrees that the definitions of "individual with a disability," "individual with a significant disability," and "significant disability" should be consistent with each other and also that these definitions should be consistent with the definitions in the Act. The Secretary believes that the concepts of "physical"

and "mental" impairments in the statutory definitions include the concepts of "sensory" and "cognitive" impairments, respectively. Therefore, inclusion of the terms is not inconsistent.

Changes: The Secretary has added the words "cognitive" and "sensory" to the definitions of "individual with a significant disability" and "significant disability" in the final regulations.

Comments: One commenter suggested revising the definition of "nonresidential" to allow centers to own and operate rental housing that is available to the general public if the center has received a residential facility as a bequest or trust intended primarily to enable the center to benefit from the income of the property.

Discussion: The definition of "center for independent living" in section 702(1) of the Act and the definition of "eligible agency" in section 726 of the Act both include the term "nonresidential." Congress clearly intended centers and eligible agencies that receive funds under Chapter 1 of Title VII of the Act to be "nonresidential." The Secretary believes that the definition of "nonresidential" in the final regulations accurately reflects the intent of Congress. This definition prohibits a center from receiving funds under Title VII of the Act if the center operates or manages housing or shelter for individuals with significant disabilities as an IL service on either a temporary or long-term basis, unless the housing or shelter is incidental to the overall operation of the center, necessary so that the individual may receive an IL service, and limited to a period not to exceed eight weeks during any six-month period. Therefore, a center may not operate or manage a residential facility in a manner that is inconsistent with this definition.

Changes: None.

Allowable Costs (§ 364.5)

Comments: Commenters objected to the limitation in proposed § 364.5 on reallocating expenditures after the initiation of an audit or compliance review. These commenters considered this limitation punitive and contrary to ordinary accounting procedures.

Discussion: The Secretary does not intend to require accounting practices that are not widely practiced and acceptable. In addition, the Secretary has decided that the policy on offsetting costs that have been disallowed as a result of an audit or a monitoring review should be uniform for all U.S. Department of Education (Department) programs. No rationale exists for treating IL programs differently from other Department programs.

Changes: The Secretary has deleted proposed § 364.5.

Program Income (§ 364.5)

Comments: Commenters questioned whether funds raised by centers pursuant to their statutory obligation to develop funding resources other than Chapter 1 of Title VII of the Act are program income.

Discussion: The definition of program income in § 364.5 includes gross income received by a grantee under Title VII of the Act that is directly generated by an activity supported under 34 CFR Parts 365, 366, or 367. The Secretary does not believe any adequate reason exists to exempt funds raised by centers pursuant to their statutory obligation to develop funding resources other than Chapter 1 of Title VII of the Act from this definition.

Changes: The Secretary has deleted proposed § 364.6(c) to clarify that the carryover provision in section 19(a)(2) of the Act applies to program income received under the IL programs.

Obligation of Federal Funds and Program Income (§ 364.6)

Comments: Commenters suggested that the resource development requirement in evaluation standard 7 in section 725(b)(7) of the Act should be interpreted to permit centers to accumulate funds over several years to create, among other long-term financial instruments, endowments and reserves.

Discussion: Pursuant to § 364.6, which implements section 19(a)(2) of the Act, any program income received by a center that is not obligated and expended prior to the beginning of the fiscal year succeeding the fiscal year in which these funds were received remains available for obligation and expenditure by the center during the succeeding fiscal year. Therefore, program income, which includes funds received by a center through fundraising activities carried out with Title VII funds, may be available for obligation and expenditure for a maximum of almost two years after it is received.

The Secretary agrees that centers should be allowed to use program income to establish or augment endowments and other similar financial instruments if the principal and income generated from the endowment and other similar financial instruments are used solely to carry out the purposes of the CIL program authorized under Part C of Chapter 1 of Title VII of the Act. However, any program income received by a center must be obligated and expended in accordance with § 364.6(b).

The Secretary recognizes that the notice inviting applications for new awards (application notice) published in the **Federal Register** on July 6, 1994 (59 FR 34597) indicated that the Secretary anticipated revising proposed §§ 364.5 and 364.6. However, because nothing in the proposed regulations prohibited centers from establishing or augmenting endowments or other similar instruments, the Secretary has decided that §§ 364.5 and 364.6 do not need to be revised for this purpose. This action does not affect the competition for new awards under the CIL program.

Changes: None.

Approval of State Plans (§ 364.12)

Comments: Commenters expressed concern that paragraphs (c), (d), and (e) of proposed § 364.12 refer only to the designated State unit (DSU) or the State and do not properly reflect the role of the Statewide Independent Living Council (SILC) in the development of the State plan. Similar concerns were expressed with respect to various provisions in proposed §§ 364.13 and 364.20.

Discussion: The Secretary has reviewed §§ 364.12, 364.13, and 364.20 of the proposed regulations to ensure that the final regulations reflect the appropriate role of the SILC.

Changes: The Secretary has added language to §§ 364.12(c), 364.13(c) and 364.20 (e), (g), (h), and (i) of the final regulations to clarify the SILC's role in the development of the State plan.

Withholding, Reduction, Limitation, or Termination (§ 364.13)

Comments: One commenter found the references to the "Department's final decision" in proposed § 364.13(h) and to the "Secretary's final decision" in proposed § 364.13(i) inconsistent and confusing.

Discussion: The references to the final decisions of the Department and the Secretary in § 364.13 (h) and (i) of these regulations are consistent with 34 CFR 81.44, which applies to all Department programs. The Secretary finds no reason to change these references for the IL programs.

Changes: None.

Comments: One commenter suggested that proposed § 364.13(f) be revised to allow the SILC to seek review of an administrative law judge's initial decision.

Discussion: Only a recipient of grant funds that receives a written notice of a disallowance decision may appeal the Department's attempt to recover grant funds. Pursuant to 34 CFR 81.7, a non-party (i.e, a non-recipient) may apply to participate in a recovery of funds

proceeding under 34 CFR Part 81. Section 364.13(f) is consistent with 34 CFR Part 81.

Changes: None.

Comments: One commenter asked whether the reference to "State" in proposed § 364.13(i) means the DSU, the SILC, or both. Discussion: The reference to "State" in § 364.13(i) means only the DSU.

Changes: None.

State Plan Requirements (§ 364.20)

Comments: Two commenters objected to the prohibition against separate State plans in those States in which one State agency is responsible for providing vocational rehabilitation (VR) services to the general population and a separate agency is responsible for providing VR services to individuals who are blind. One commenter suggested that the definitions in the Act and the long-established policy of the Rehabilitation Services Administration allow a separate State plan for providing VR services to individuals who are blind. Other commenters noted that, although the preamble to the proposed regulations indicates that only a single State plan is permitted under Title VII (even in States with an agency that provides VR services to individuals who are blind), the proposed regulations are not as clear on this issue.

Discussion: Section 704 of the Act requires "a State plan" that addresses how IL services will be provided to all individuals with a significant disability in the State. The words "a State plan" indicate a single State plan for IL, not two or more State plans for IL, regardless of the existence of two or more agencies that may provide services to different groups of individuals with a significant disability in the State.

In addition, a State plan that only addresses the IL services to be provided to individuals with a significant disability who are blind could not be comprehensive enough to satisfy the requirement in section 704(g) of the Act that the State plan include a design for the establishment of a statewide network of centers that comply with the standards and assurance in section 725 of the Act.

An agency that is authorized to provide VR services to individuals who are blind may not provide IL services to individuals with a significant disability who are not blind. Section 725(b)(2) requires that centers provide IL services on a "cross-disability basis." This means that a center may not restrict the services that it provides to individuals with any particular type or combination of types of disabilities. An agency that is authorized to provide VR services to individuals who are blind could not comply with this requirement. Therefore, an agency that is authorized to provide VR services to individuals who are blind may not submit a separate State plan for IL.

Changes: The Secretary has added language to § 364.22(c) of the final regulations to clarify that an agency that is authorized to provide VR services to individuals who are blind may not submit a separate State plan for IL.

Comments: Commenters recommended that proposed § 364.20(e) be amended to require that the Director of the Client Assistance Program (CAP) be given the opportunity to participate in public hearings or contribute as a member of the SILC. Two commenters suggested that the Director of the CAP should not be involved in the review of the State plan.

Discussion: Nothing in § 364.20(e) or any other section of these regulations prevents the Director of the CAP from participating at any public hearings held by either the DSU or SILC on the development of the State plan.

Changes: None.

Statewide Independent Living Council (§ 364.21)

Comments: One commenter suggested that the regulations should contain a dispute resolution process to resolve impasses between a SILC, a DSU, and the Office of the Governor. This commenter was concerned that, as a result of the single State plan provision, a smaller State agency for individuals who are blind may hold up IL services for all individuals with a significant disability in the State because it disagrees with the State plan.

Discussion: The resolution of issues that may arise between the DSU and the SILC during the development of the State plan should be resolved at the State level.

Changes: None.

Comments: One commenter recommended adding a provision to allow the public to challenge the qualifications of SILC members appointed by the Governor.

Discussion: If a question arises whether a SILC member appointed by the Governor meets the qualifications in § 364.21(c), the issue may be raised to the Governor or to the Secretary in the same manner as any other question regarding the proper implementation of these regulations.

Changes: None.

Comments: Commenters suggested that the conflict of interest provision in proposed § 364.21(l) either be deleted or revised to exempt SILC members who are affiliated with a center. These commenters considered this provision to be too broad and easily subject to abuse.

Discussion: The Secretary agrees that it is unnecessary to have a conflict of interest provision for IL programs that differs from the conflict of interest provision applicable to all Department programs.

Changes: The Secretary has revised § 364.21(l) of the final regulations to apply the code of conduct provisions in 34 CFR 74.162 and the conflict of interest provisions in 34 CFR 75.524 and 75.525 to members of the SILC.

Staffing Requirements (§ 364.23)

Comments: One commenter objected to the requirement in proposed § 364.23(b)(2) that each center provide non-English language interpreters.

Discussion: The Secretary believes that centers should be required, to the maximum extent feasible, to make available personnel able to communicate in the native languages of individuals with significant disabilities whose English proficiency is limited and who apply for or receive IL services under Title VII of the Act. A center is not required to hire non-English language interpreters as full-time employees. However, a center is required to ensure that someone is available as needed to comply with this requirement.

Changes: None.

Staff Development (§ 364.24)

Comments: One commenter objected to the requirement in proposed § 364.24 that each center provide staff development programs.

Discussion: The Secretary believes that staff development programs are necessary for the proper and efficient administration of IL programs funded under Chapter 1 of Title VII of the Act.

Changes: None.

IL Services for Older Individuals Who Are Blind (§ 364.28)

Comments: One commenter recommended including older individuals who are blind in the selection of new methods and approaches for the provision of IL services pursuant to proposed § 364.28.

Discussion: The selection and incorporation into the State plan of any new approaches for the provision of IL services to older individuals who are blind requires a revision to the State plan. Because § 366.20(g) requires the DSU and the SILC to hold public hearings prior to the submission of the State plan to the Secretary and prior to any revisions to the State plan, the Secretary believes that the views of

older individuals who are blind will be adequately addressed by this requirement.

Changes: None.

Outreach (§ 364.32)

Comments: One commenter objected to proposed § 364.32, which the commenter believes permits SILCs to define the "unserved" and "underserved" groups for which individual centers must provide "aggressive outreach."

Discussion: Section 364.32(b) of these regulations requires that the State plan must identify the "unserved and underserved" populations to be designated for targeted outreach efforts and the geographic areas in which these populations reside. Both the DSU and the SILC are jointly responsible for the development of the State plan. In addition, the DSU and the SILC must give the public an opportunity to comment on the State plan before it is submitted to the Secretary for approval. Therefore, it is inaccurate to state that the SILC is permitted to define "unserved and underserved populations" for purposes of § 364.32(b).

Changes: None.

Access to Records (§ 364.37)

Comments: Commenters expressed concern that the access to records proposed in § 364.37(c) may be unnecessarily intrusive and inconsistent with commitments that providers make to their consumers. These commenters also suggested that the regulations should permit centers to expunge personal information from consumer case records or files.

Discussion: Access to individual case records or files, or consumer service records, including personal information that may be included in those records or files, is necessary for the proper and efficient administration and monitoring of IL programs. Section 364.37(c) limits this access to the Secretary and the Comptroller General of the United States, or any of their duly authorized representatives for the purpose of conducting audits, examinations, and compliance reviews. The Secretary does not believe that this access is unreasonable.

Changes: None.

Assurances Regarding Eligibility (§ 364.41)

Comments: One commenter objected to proposed § 364.41(b), which the commenter characterized as requiring every center to serve every person who requests services regardless of the person s residence. This commenter stated that this requirement is an unfair cost burden and will force centers to incur the costs of serving persons who should be served by other centers.

Discussion: The Secretary believes that a service provider should provide IL services to any individual who is present in a State and who is otherwise eligible for IL services. This policy is consistent with section 101(a)(14) of the Act and with most other Federal programs.

Changes: None.

Objectives and Information in the State Plan (§ 364.42)

Comments: Commenters suggested that proposed § 364.42(a)(2) be amended to include identification of the various funding sources that the State plans to use to fund the various activities under the State plan.

Discussion: The Secretary agrees that identification of the various funding sources that the State plans to use to fund the various activities under the State plan will assist the Department in determining the effectiveness of the State's compliance with section 704(j) and (k) of the Act. Section 704(j) is implemented by § 364.27 of these regulations and requires the coordination of IL services with other services to avoid unnecessary duplication with other Federal, State, and local programs. Section 704(k) of the Act is implemented by § 364.29 of these regulations and requires the coordination of Federal and State funding for centers and IL services also to avoid unnecessary duplication with other Federal, State, and local programs. Requiring the identification of the Federal and non-Federal funds that the DSU intends to use to meet the objectives of the State plan will assist the Secretary in determining a State's compliance with §§ 364.27 and 364.29.

Changes: The Secretary has revised § 364.42(a)(2) of the final regulations to provide that the financial plan required under this section must include the identity and amounts of other Federal and non-Federal funds that the DSU anticipates using to meet the objectives in the State plan.

Determinations of Eligibility or Ineligibility (§ 364.51)

Comments: Commenters were concerned that the requirement in proposed § 364.51(b)(2)(i) that an advocate or representative must be "legally authorized" may be misinterpreted to require an advocate or representative to be an attorney or legal guardian. Another commenter suggested that proposed § 364.51(b)(2)(i) be amended to permit the consumer to choose as an advocate or representative an individual who may not be technically "legally authorized" to act on behalf of the consumer.

Discussion: An individual's authority to represent or advocate on behalf of an individual with significant disabilities is determined pursuant to State law. Similarly, a consumer may choose as an advocate or representative an individual who may not be technically "legally authorized" to the extent such a choice is permitted by State law. Nothing in § 364.51(b)(2) of these regulations requires that an advocate or representative must be an attorney or legal guardian. However, the Secretary recognizes that clarification of this issue is necessary.

Changes: The Secretary has added a definition of "legally authorized advocate or representative" to § 364.4 of the final regulations. This new definition recognizes that non-attorneys may advocate for or represent a consumer if permitted by State law.

Comments: One commenter suggested that language should be added to proposed § 364.51(c) to require a service provider to review an ineligibility determination if the individual's status changes. This commenter was concerned that a service provider could satisfy the review requirement in proposed § 364.51(c) by conducting a review of the ineligibility determination on the same day that the determination is made and, thus, circumvent the intent of this provision.

Discussion: The Secretary agrees that a service provider must review an ineligibility determination whenever there has been a material change in an applicant's status.

Changes: The Secretary has added language to § 364.51(c) of the final regulations that requires a service provider to review a determination of ineligibility whenever the service provider determines that the applicant's status has materially changed but no less than once within 12 months after making the ineligibility determination.

IL Plan (§ 364.52)

Comments: Two commenters objected to the absence of requirements in proposed § 364.52 regarding the content of a waiver. One of these commenters also suggested that the service provider be required to advise the consumer, before obtaining a waiver, of the need for and importance of an IL plan and how an IL plan helps to protect a consumer's rights. Another commenter suggested deleting proposed § 364.52(d) or revising it to allow the consumer to choose whether or not to comply with this provision, which requires that the

development of a consumer's IL plan and the provision of IL services be coordinated with the individualized written rehabilitation program (IWRP) for VR services, the individualized habilitation program (IHP) prepared under the Developmental Disabilities Assistance and Bill of Rights Act, and the individualized education program (IEP) prepared under Part B of the Individuals with Disabilities Education Act.

Discussion: The Secretary does not believe it is necessary to prescribe what should be included in the waiver permitted by § 364.52(a)(2) of these regulations. However, the Secretary agrees that it is important to add safeguards to this provision to prevent the possibility of service providers coercing consumers to sign waivers. Finally, the Secretary believes that requiring service providers to coordinate a consumer's IL plan with the consumer's IWRP, IHP, and IEP is necessary to avoid unnecessary duplication of services provided by these programs.

Changes: The Secretary has added the words "knowingly and voluntarily" before the word "signs" in § 364.52(a)(2) of the final regulations.

Maintenance of Records (§ 364.53)

Comments: Commenters suggested that proposed § 364.53 be revised to recognize the fact that records may be electronic as well as written.

Discussion: The Secretary recognizes that records may be produced electronically and supports the recording of information by electronic means.

Changes: The Secretary has revised § 364.53 in the final regulations to clarify that records may be maintained either electronically or in written form, except that all IL plans, if consumers choose to develop one, and all waivers of an IL plan, if consumers choose to sign one, must be in writing.

Comments: One commenter objected to the recordkeeping requirements in proposed § 364.53. This commenter believed that "a simple record showing that an identified consumer has one or more identified disabilities and received specific services on a specific date is sufficient."

Discussion: The Secretary believes that the recordkeeping requirements in § 364.53 of these regulations are necessary for the proper and efficient administration of IL programs funded under Title VII of the Act. In addition, the Secretary believes these requirements are necessary to ensure that determinations of eligibility are made in accordance with the Act and these regulations; service providers comply with the IL plan and waiver requirements; the IL services provided to consumers are the IL services requested by consumers; and service providers record the IL goals and objectives established and achieved by consumers. However, the Secretary does not believe a center should be required to maintain a case service record for individuals who seek or receive only information and referral services from a center.

Changes: The Secretary has revised § 364.53 of the final regulations to exempt individuals who seek or receive only information and referral services from the requirement that a center maintain consumer service records for individuals who apply for or receive IL services.

Standards for Service Providers (§ 364.55)

Comments: Commenters suggested that the standards developed by the DSU pursuant to proposed § 364.55(a) should not exceed the standards in section 725 of the Act.

Discussion: The standards referred to in proposed § 364.55 are the standards that the DSU is required to develop pursuant to § 365.31 for those service providers that are not centers and for centers that are providing specialized IL services under a contract with the DSU. These standards may or may not exceed the standards in section 725 of the Act.

Changes: The Secretary has revised § 365.31 of the final regulations to clarify that State standards developed pursuant to this section may differ from the standards in section 725 of the Act and may apply to centers that are providing specialized IL services under a contract with the DSU.

Protection, Use, and Release of Personal Information (§ 364.56)

Comment: One commenter suggested deleting proposed § 364.56(a)(3)(v) or specifying the agencies that will routinely receive personal information about a consumer.

Discussion: The Secretary does not believe it is necessary or possible to identify in these regulations the agencies to which each service provider may routinely release information.

Changes: None.

Comments: One commenter objected to the words "other information" in proposed § 364.56(c)(2) because service providers may use this language to withhold information from a consumer.

Discussion: Section 364.56(c)(2) of these regulations does not permit a service provider to withhold information from a consumer. Section 364.56(c)(2) merely requires that, if a service provider determines that releasing medical, psychological, or other information may be harmful if released directly to the consumer, the service provider shall release this information to the consumer through a qualified medical or psychological professional or the individual's legally authorized representative.

Changes: None.

Comments: One commenter suggested deleting proposed § 364.56(e)(2) because this provision does not provide consumer control over personal information that is maintained by a service provider. This commenter also noted that routine release of information to other agencies is contrary to the IL philosophy of consumer control.

Discussion: The Secretary agrees that a consumer should have control over the release (pursuant to § 364.56(e)(2) of these regulations) of medical or psychological information to another agency or organization by a service provider.

Changes: The Secretary has revised § 364.56(e)(2) of the final regulations to require a consumer's informed written consent to release to another agency or organization medical or psychological information.

Financial Needs Test (§ 364.59)

Comments: One commenter suggested that proposed § 364.59 be revised to clarify that a State may choose whether or not to adopt a financial needs test for receiving IL services.

Discussion: Implicit in proposed § 364.59 was the fact that a State is neither required nor prohibited from requiring consumers to contribute to the costs of the IL services they seek from a service provider. Also implicit in proposed § 364.59 was the fact that, if a State chooses to require consumers to contribute to the costs of the IL services they seek from a service provider, a State is neither required nor prohibited from applying a financial needs test to determine the amount that a particular consumer may be required to contribute to the costs of the IL services he or she seeks from a service provider. The Secretary agrees with the need to revise proposed § 364.59 to clarify its meaning.

Changes: The Secretary has revised § 364.59 of the final regulations to clarify that the decision to allow service providers to charge consumers for the cost of providing IL services or to allow service providers to apply a financial needs test to determine the amount of a particular consumer's participation in the costs of IL services must be made in accordance with the State plan.

Part 365

Funds to Provide IL Core Services (§ 365.22) and Additional IL Services (§ 365.21)

Comments: One commenter suggested revising proposed § 365.21 to clarify that a State does not have to provide the IL core services with funds made available under Part B of Chapter 1 of Title VII of the Act, if the State is providing the IL core services with other resources. The same commenter suggested a similar revision to proposed § 364.22.

Discussion: The Secretary agrees with the commenters that proposed §§ 365.21(a) and 365.22 should be revised as they suggest.

Changes: The Secretary has amended §§ 365.21(a) and 365.22 of the final regulations to make it clear that a State may use either funds provided under Part B of Chapter 1 of Title VII of the Act or other funds to provide the IL core services and other additional IL services.

Comments: One commenter asked whether a State can award a grant or subgrant on a non-competitive basis.

Discussion: The requirements applicable to the awarding of subgrants by grantees pursuant to the regulations in 34 CFR Part 365 are addressed in 34 CFR 76.51, which gives a State wide latitude on how to award subgrants.

Changes: None.

Part 366

Eligibility for Assistance Under the CIL Program (§ 366.2)

Comments: None.

Discussion: Since publication of the NPRM, the Secretary has reviewed this section and wants to clarify that a center may serve a community within the State in which the center is located or a community in a bordering State. The Secretary also wants to clarify that a center that is not receiving funds under Part C of Chapter 1 of Title VII of the Act may apply as a new center, even if the center receives funds under Part B of Chapter 1 of Title VII of the Act. Finally, the Secretary feels that it is important to clarify that a center that proposes the expansion of an existing center through the establishment of a separate and complete center does not need to establish a separate governing board for the new center. The governing board of the existing center may serve as the governing board for the new center.

Changes: The Secretary has revised § 366.2(a)(1)(i), (b)(1), (b)(2), and (b)(3) of the final regulations to reflect these changes. The Secretary made similar corresponding changes to §§ 366.28(a) and 366.29(a) of the final regulations.

Activities the Secretary Funds (§ 366.3)

Comments: One commenter suggested that the word "such" be included in proposed § 366.3(b)(4) because its absence makes this provision unclear and may lead centers to believe that an IL plan is necessary before a consumer may receive IL services.

Discussion: The Secretary agrees that the omission of the word "such" from proposed § 366.3(b)(4) leaves the meaning of this provision unclear. An eligible agency is not required to facilitate the development and achievement of IL goals for an individual with a significant disability who does not seek assistance to develop and achieve IL goals. In addition, section 704(e) of the Act specifically allows a consumer to waive the development of an IL plan. However, the waiver of an IL plan does not preclude a consumer from developing and seeking to achieve IL goals with assistance from the center.

Changes: The Secretary has revised § 366.3(b)(4) of the final regulations to clarify that an eligible agency may use funds awarded under Subparts C and D of 34 CFR Part 366 to facilitate the development and achievement of IL goals selected by individuals with significant disabilities who seek assistance in the development and achievement of IL goals.

Order of Priorities (§ 366.22)

Comments: Commenters observed that, if any funds are left over after the Secretary awards grants to existing centers under Part C of Chapter 1 of Title VII of the Act, proposed § 366.22(b) allows the Secretary to use these excess funds to assist existing centers or to reallot these excess funds to another State. These commenters suggested that, under these circumstances, proposed § 366.22(b) should be amended to require the Secretary to consult with the DSU and the SILC before making this decision.

Discussion: The Secretary may use excess funds only to assist existing centers in the State or for reallotment if these funds are insufficient to fund a new center in the State. The Secretary will make any decision to use excess funds to assist existing centers in a State in a manner that is consistent with the State plan of the State in which the excess funds exist. The Secretary believes this will ensure that a State's concerns will be adequately addressed and that it is not necessary to include in these final regulations any requirement that the Secretary consult with the DSU or the SILC.

Changes: The Secretary has revised § 366.22(b)(1) of the final regulations to require that the use of excess funds to assist existing centers in a State will be consistent with the State plan.

Selection Criteria (§ 366.27)

Comments: One commenter suggested revising the selection criteria in proposed § 366.27 to require that the governing board be reflective of the localities to be served by the proposed center.

Discussion: Section 702(1)(A) of the Act requires that a center be "designed and operated within a local community." The Secretary believes that this requirement provides sufficient safeguard to ensure that a center's governing board will be reflective of the localities the center proposes to serve.

Changes: None.

Comments: One commenter suggested that the selection criteria in proposed § 366.27 should include a requirement that centers take affirmative action to hire and promote individuals with significant disabilities.

Discussion: Pursuant to section 725(c)(5) of the Act, the State plan required by section 704(a)(1) of the Act must include satisfactory assurances that all recipients of financial assistance under Parts B and C of Chapter 1 of Title VII of the Act will take affirmative action to employ and advance in employment qualified individuals with significant disabilities on the same terms and conditions required with respect to the employment of individuals with disabilities under section 503 of the Act. The Secretary does not believe it is necessary to include this requirement as a selection criterion, which a center could then choose whether or not to address in its application.

Changes: None.

Comments: One commenter believed that the selection criterion on need in proposed § 366.27(a)(2) is too vague and suggested that it be expanded to "not appear to be the traditional 'needs assessment' that creates more service providers." This commenter suggested that the criterion should be based on how supportive a center is of IL and of advocating for change.

Discussion: The Secretary believes that the criterion adequately explains how an applicant can be expected to identify the need for a new center in a community and how the applicant plans to address this identified need. The Secretary also believes that there is adequate emphasis on advocacy in the regulations.

Changes: None.

Comments: One commenter objected that the selection criteria, particularly § 366.27 (a) through (c), place too much emphasis on past performance.

Discussion: Only the selection criterion in § 366.27(b) of these regulations addresses an applicant's past performance. In addition, this selection criterion accounts for only 5 points out of a total of 100 points.

Changes: None.

Comments: Commenters suggested reducing the points allotted to "plan of operation" and increasing points for "involvement of individuals with significant disabilities" in the selection criteria in proposed § 366.27 (g) and (h), respectively. Commenters also felt that the proposed selection criteria should include the involvement of individuals with significant disabilities in the preparation of a center's application.

Discussion: The Secretary believes that the points assigned to the "plan of operation" selection criterion appropriately reflect its value. The Secretary also believes that § 366.27(h)(2) of these regulations sufficiently covers the involvement of individuals with significant disabilities in conducting center activities. However, the Secretary agrees that participation of individuals with significant disabilities in the preparation of applications is important and should be emphasized.

Changes: The Secretary has substituted the phrase "developing the center's application" for the phrase "conducting center activities" in § 366.27(h)(1) of the final regulations.

Order of Priorities (§ 366.34)

Comments: One commenter suggested that the order of priorities for funding in proposed § 366.34(a) be listed in the State plan to ensure that the expenditure of funds meets the requirements and purposes of Title VII of the Act.

Discussion: The Secretary agrees that requiring a State that administers the CIL program pursuant to section 723 of the Act to include in its State plan the order of priorities for allocating funds within the State is important.

Changes: Because the suggested change is to the State plan requirements, the Secretary has revised § 364.39 of the final regulations to require that, in States in which State funding for centers equals or exceeds the amount of funds allotted to the State under Part C of Title VII of the Act, as determined pursuant to 34 CFR 366.29 and 366.31, and in which the State elects to administer the CIL program as provided in section 723 of the Act, the State plan must include policies, practices, and procedures, including the order of priorities that the State may establish pursuant to 34 CFR 366.34(a)

Comments: Commenters suggested that the Director of the DSU should be required to consult with the SILC before determining how excess funds should be used.

Discussion: Whether a Director of the DSU consults with the SILC before determining, pursuant to § 366.34(b), how excess funds should be used is an issue that should be resolved at the State level, preferably during the joint development of the State plan by the DSU and the SILC that is mandated by section 705(c)(1) of the Act. To the extent that this situation is addressed by the State plan, the consultation will already have taken place. If the State plan does not address this issue, the Director of the DSU should ensure that the use of any excess funds is consistent with the State plan.

Changes: The Secretary has revised § 366.34(b)(1) of the final regulations to require the Director of the DSU, if the DSU plans to use excess funds to assist existing centers in a State, to use these funds in a manner consistent with the State plan.

Enforcement (§ 366.39)

Comments: One commenter recommended that a corrective action plan should require a center to comply with the standards and assurances within six months after a center receives approval of its plan.

Discussion: The Secretary believes that the length of a corrective action plan must be determined on a case-by-case basis. In some cases, immediate corrective action may be required. In other cases, six months may be unrealistically short. The Secretary believes it would be unwise to establish a rigid timeframe for corrective action plans.

Changes: None.

Assurances (§ 366.50)

Comments: None.

Discussion: Although no parties commented on proposed § 366.50(n), the Secretary believes it is important to establish a deadline for the submission of the annual performance report because it is necessary to enable the Secretary to make timely continuation grants. A 90-day period before the end of the fiscal year is consistent with other reporting requirements in the Education Department General Administrative Regulations.

Changes: The Secretary has revised § 366.50 in the final regulations to require that the annual performance report be submitted within 90 days of the end of the fiscal year.

Part 367

Definitions (§ 367.5)

Comments: One commenter recommended adding a definition of "capacity building" to proposed § 367.5.

Discussion: Section 725(b)(6) of the Act describes "activities to increase community capacity" as activities "to increase the capacity of communities . . . to meet the needs of individuals with [significant] disabilities." The Secretary believes that the term "capacity building" should be interpreted in a manner consistent with section 725(b)(6) of the Act and does not need to be further defined.

Changes: None.

Selection Criteria (§ 367.22)

Comments: One commenter suggested that the list of services under the selection criterion in proposed § 367.22(g) should be the same as that provided in proposed § 367.3(b).

Discussion: The Secretary agrees that the list of services in these referenced provisions should be consistent. The services listed in § 367.22(g) include the services listed in § 367.3(b).

Changes: The Secretary has changed §§ 367.3(b) and 367.22(g)(2) in the final regulations to clarify that the services listed in § 367.22 include the services listed in § 367.3(b).

Comments: One commenter suggested that proposed § 367.22(g) should be clarified to allow a designated State agency (DSA) to use funds received under Chapter 2 of Title VII of the Act in a way that will not duplicate services that the State may be providing with other funds.

Discussion: The Secretary agrees that Chapter 2 funds should be used in a way that will supplement, rather than duplicate, services that may already be available through other sources.

Changes: The Secretary has revised § 367.22(g)(2) of the final regulations to clarify that an application will be evaluated on the extent to which the DSA will use Chapter 2 funds to meet the unmet IL needs of individuals in the State.

Awarding Grants or Contracts (§ 367.41)

Comments: Two commenters recommended deleting proposed § 367.41(b), which restricts a DSA's flexibility to enter into procurement contracts with public and private nonprofit agencies.

Discussion: Although section 752(i)(2)(A) of the Act is a general provision that allows the DSA to operate

or administer this program either directly or through grants or contracts, section 752(g) of the Act specifically requires that a State's awards to public and private nonprofit agencies and organizations under this program be made only through grants.

Changes: None.

Intergovernmental Review

These programs are subject to the requirements of Executive Order 12372 and the regulations in 34 CFR Part 79. The objective of the Executive order is to foster an intergovernmental partnership and a strengthened federalism by relying on processes developed by State and local governments for coordination and review of proposed Federal financial assistance.

In accordance with the order, this document is intended to provide early notification of the Department's specific plans and actions for this program.

Assessment of Educational Impact

In the notice of proposed rulemaking, the Secretary requested comments on whether the proposed regulations would require transmission of information that is being gathered by or is available from any other agency or authority of the United States.

Based on the response to the proposed regulations and on its own review, the Department has determined that the regulations in this document do not require transmission of information that is being gathered by or is available from any other agency or authority of the United States.

List of Subjects in 34 CFR Parts 364, 365, 366, and 367

Aged, Blind, Disabled, Grant programs—education, Independent living services, Reporting and recordkeeping requirements, Vocational rehabilitation.

(Catalog of Federal Domestic Assistance Numbers: 84.132 Centers for Independent Living; 84.169 State Independent Living Services; and 84.177 Independent Living Services for Older Individuals Who Are Blind.)

Dated: August 3, 1994.

Richard W. Riley,

Secretary of Education.

The Secretary amends Title 34 of the Code of Federal Regulations by adding a new Part 364 and by revising Parts 365, 366, and 367 to read as follows:

PART 364—STATE INDEPENDENT LIVING SERVICES PROGRAM AND CENTERS FOR INDEPENDENT LIVING PROGRAM: GENERAL PROVISIONS

Subpart A—General

Sec.
364.1 What programs are covered?
364.2 What is the purpose of the programs authorized by Chapter 1 of Title VII?
364.3 What regulations apply?
364.4 What definitions apply?
364.5 What is program income and how may it be used?
364.6 What requirements apply to the obligation of Federal funds and program income?

Subpart B—What Are the Application Requirements?

364.10 What are the application requirements?
364.11 When must the State plan be submitted for approval?
364.12 How does the Secretary approve State plans?
364.13 Under what circumstances may funds be withheld, reduced, limited, or terminated?

Subpart C—What Are the State Plan Requirements?

364.20 What are the general requirements for a State plan?
364.21 What are the requirements for the statewide Independent Living Council (SILC)?
364.22 What is the State's responsibility for administration of the programs authorized by Chapter 1 of Title VII?
364.23 What are the staffing requirements?
364.24 What assurances are required for staff development?
364.25 What are the requirements for a statewide network of centers for independent living?
364.26 What are the requirements for cooperation, coordination, and working relationships?
364.27 What are the requirements for coordinating independent living (IL) services?
364.28 What requirements relate to IL services for older individuals who are blind?
364.29 What are the requirements for coordinating Federal and State sources of funding?
364.30 What notice must be given about the Client Assistance Program (CAP)?
364.31 What are the affirmative action requirements?
364.32 What are the requirements for outreach?
364.33 What is required to meet minority needs?
364.34 What are the fiscal and accounting requirements?
364.35 What records must be maintained?
364.36 What are the reporting requirements?
364.37 What access to records must be provided?
364.38 What methods of evaluation must the State plan include?
364.39 What requirements apply to the administration of grants under the Centers for Independent Living program?
364.40 Who is eligible to receive IL services?
364.41 What assurances must be included regarding eligibility?
364.42 What objectives and information must be included in the State plan?
364.43 What requirements apply to the provision of State IL services?

Subpart D—What Conditions Must Be Met After an Award?

364.50 What requirements apply to the processing of referrals and applications?
364.51 What requirements apply to determinations of eligibility or ineligibility?
364.52 What are the requirements for an IL plan?
364.53 What records must be maintained for the individual?
364.54 What are the durational limitations on IL services?
364.55 What standards shall service providers meet?
364.56 What are the special requirements pertaining to the protection, use, and release of personal information?
364.57 What functions and responsibilities may the State delegate?
364.58 What appeal procedures must be available to consumers?
364.59 May an individual's ability to pay be considered in determining his or her participation in the costs of IL services?

Authority: 29 U.S.C. 796–796f-5, unless otherwise noted.

Subpart A—General

§ 364.1 What programs are covered?

(a) This part includes general requirements applicable to the conduct of the following programs authorized under Title VII of the Rehabilitation Act of 1973, as amended:

(1) The State Independent Living Services (SILS) program (34 CFR Part 365).

(2) The Centers for Independent Living (CIL) program (34 CFR Part 366).

(b) Some provisions in this part also are made specifically applicable to the Independent Living Services for Older Individuals Who Are Blind (OIB) program (34 CFR Part 367).

(Authority: 29 U.S.C. 711(c) and 796–796f-5)

§ 364.2 What is the purpose of the programs authorized by Chapter 1 of Title VII?

The purpose of the SILS and CIL programs authorized by Chapter 1 of Title VII of the Act is to promote a philosophy of independent living (IL), including a philosophy of consumer control, peer support, self-help, self-determination, equal access, and individual and system advocacy, to maximize the leadership, empowerment, independence, and

productivity of individuals with significant disabilities, and to promote and maximize the integration and full inclusion of individuals with significant disabilities into the mainstream of American society by providing financial assistance to States—

(a) For providing, expanding, and improving the provision of IL services;

(b) To develop and support statewide networks of centers for independent living (centers); and

(c) For improving working relationships among—

(1) SILS programs;

(2) Centers;

(3) Statewide Independent Living Councils (SILCs) established under section 705 of the Act;

(4) State vocational rehabilitation (VR) programs receiving assistance under Title I and under Part C of Title VI of the Act;

(5) Client assistance programs (CAPs) receiving assistance under section 112 of the Act;

(6) Programs funded under other titles of the Act;

(7) Programs funded under other Federal laws; and

(8) Programs funded through non-Federal sources.

(Authority: 29 U.S.C. 796)

§ 364.3 What regulations apply?

The following regulations apply to the SILS and CIL programs:

(a) The Education Department General Administrative Regulations (EDGAR) as follows:

(1) 34 CFR Part 74 (Administration of Grants to Institutions of Higher Education, Hospitals, and Nonprofit Organizations), with respect to grants or subgrants to an eligible agency that is not a State or local government or Indian tribal organization.

(2) 34 CFR Part 75 (Direct Grant Programs), with respect to grants under Subparts B and C of 34 CFR Part 366.

(3) 34 CFR Part 76 (State-Administered Programs), with respect to grants under 34 CFR Part 365 and Subpart D of 34 CFR Part 366.

(4) 34 CFR Part 77 (Definitions that Apply to Department Regulations).

(5) 34 CFR Part 79 (Intergovernmental Review of Department of Education Programs and Activities).

(6) 34 CFR Part 80 (Uniform Administrative Requirements for Grants and Cooperative Agreements to State and Local Governments), with respect to grants to an eligible agency that is a State or local government or Indian tribal organization.

(7) 34 CFR Part 81 (General Education Provisions Act—Enforcement).

(8) 34 CFR Part 82 (New Restrictions on Lobbying).

(9) 34 CFR Part 85 (Governmentwide Debarment and Suspension (Nonprocurement) and Governmentwide Requirements for Drug-Free Workplace (Grants)).

(10) 34 CFR Part 86 (Drug-Free Schools and Campuses).

(b) The regulations in this Part 364.

(c) The regulations in 34 CFR Parts 365 and 366 as applicable.

(Authority: 29 U.S.C. 711(c))

§ 364.4 What definitions apply?

(a) *Definitions in EDGAR.* The following terms used in this part and in 34 CFR Parts 365, 366, and 367 are defined in 34 CFR 77.1:

Applicant
Application
Award
Department
EDGAR
Fiscal year
Nonprofit
Private
Project
Public
Secretary

(b) *Other definitions.* The following definitions also apply to this part and to 34 CFR Parts 365, 366, and 367:

Act means the Rehabilitation Act of 1973, as amended.

Administrative support services mean assistance to support IL programs and the activities of centers and may include financial and technical assistance in planning, budget development, and evaluation of center activities, and support for financial management (including audits), personnel development, and recordkeeping activities.

(Authority: 29 U.S.C. 796c(c)(2))

Advocacy means pleading an individual's cause or speaking or writing in support of an individual. To the extent permitted by State law or the rules of the agency before which an individual is appearing, a non-lawyer may engage in advocacy on behalf of another individual. Advocacy may—

(1) Involve representing an individual—

(i) Before private entities or organizations, government agencies (whether State, local, or Federal), or in a court of law (whether State or Federal); or

(ii) In negotiations or mediation, in formal or informal administrative proceedings before government agencies (whether State, local, or Federal), or in legal proceedings in a court of law; and

(2) Be on behalf of—

(i) A single individual, in which case it is individual advocacy;

(ii) A group or class of individuals, in which case it is *systems* (or *systemic*) *advocacy;* or

(iii) Oneself, in which case it is *self advocacy.*

Attendant care means a personal assistance service provided to an individual with significant disabilities in performing a variety of tasks required to meet essential personal needs in areas such as bathing, communicating, cooking, dressing, eating, homemaking, toileting, and transportation.

(Authority: 20 U.S.C. 706(30)(B)(vi))

Center for independent living means a consumer-controlled, community-based, cross-disability, nonresidential, private nonprofit agency that—

(1) Is designed and operated within a local community by individuals with disabilities; and

(2) Provides an array of IL services.

(Authority: 29 U.S.C. 796a(1))

Consumer control means, with respect to a center or eligible agency, that the center or eligible agency vests power and authority in individuals with disabilities, including individuals who are or have been recipients of IL services.

(Authority: 29 U.S.C. 796a(2))

Cross-disability means, with respect to a center, that a center provides IL services to individuals representing a range of significant disabilities and does not require the presence of one or more specific significant disabilities before determining that an individual is eligible for IL services.

(Authority: 29 U.S.C. 796a(1))

Designated State agency or *State agency* means the sole State agency designated to administer (or supervise local administration of) the State plan for VR services. The term includes the State agency for individuals who are blind, if that agency has been designated as the sole State agency with respect to that part of the State VR plan relating to the vocational rehabilitation of individuals who are blind.

(Authority: 29 U.S.C.. 706(3) and 721(a)(1)(A))

Designated State unit means either—

(1) The State agency or the bureau, division, or other organizational unit within a State agency that is primarily concerned with the vocational rehabilitation, or vocational and other rehabilitation, of individuals with disabilities and that is responsible for the administration of the VR program of the State agency; or

(2) The independent State commission, board, or other agency that

has the vocational rehabilitation, or vocational and other rehabilitation, of individuals with disabilities as its primary function.

(Authority: 29 U.S.C. 706(3) and 721(a)(2)(A))

Eligible agency means a consumer-controlled, community-based, cross-disability, nonresidential, private, nonprofit agency.

(Authority: 29 U.S.C. 796f-5)

Independent living core services mean, for purposes of services that are supported under the SILS or CIL programs—

(1) Information and referral services;

(2) IL skills training;

(3) Peer counseling, including cross-disability peer counseling; and

(4) Individual and systems advocacy.

(Authority: 29 U.S.C. 706(29))

Independent living services includes the independent living core services and—

(1) Counseling services, including psychological, psychotherapeutic, and related services;

(2) Services related to securing housing or shelter, including services related to community group living, that are supportive of the purposes of the Act, and adaptive housing services, including appropriate accommodations to and modifications of any space used to serve, or to be occupied by, individuals with significant disabilities;

(3) Rehabilitation technology;

(4) Mobility training;

(5) Services and training for individuals with cognitive and sensory disabilities, including life skills training and interpreter and reader services;

(6) Personal assistance services, including attendant care and the training of personnel providing these services;

(7) Surveys, directories, and other activities to identify appropriate housing, recreation opportunities, and accessible transportation, and other support services;

(8) Consumer information programs on rehabilitation and IL services available under the Act, especially for minorities and other individuals with significant disabilities who have traditionally been unserved or underserved by programs under the Act;

(9) Education and training necessary for living in a community and participating in community activities;

(10) Supported living;

(11) Transportation, including referral and assistance for transportation;

(12) Physical rehabilitation;

(13) Therapeutic treatment;

(14) Provision of needed prostheses and other appliances and devices;

(15) Individual and group social and recreational services;

(16) Training to develop skills specifically designed for youths who are individuals with significant disabilities to promote self-awareness and esteem, develop advocacy and self-empowerment skills, and explore career options;

(17) Services for children;

(18) Services under other Federal, State, or local programs designed to provide resources, training, counseling, or other assistance of substantial benefit in enhancing the independence, productivity, and quality of life of individuals with significant disabilities;

(19) Appropriate preventive services to decrease the need of individuals with significant disabilities assisted under the Act for similar services in the future;

(20) Community awareness programs to enhance the understanding and integration into society of individuals with significant disabilities; and

(21) Any other services that may be necessary to improve the ability of an individual with a significant disability to function, continue functioning, or move toward functioning independently in the family or community or to continue in employment and that are not inconsistent with any other provisions of the Act.

(Authority: 29 U.S.C. 796e-2(1))

Individual with a disability means an individual who—

(1) Has a physical, mental, cognitive, or sensory impairment that substantially limits one or more of the individual's major life activities;

(2) Has a record of such an impairment; or

(3) Is regarded as having such an impairment.

(Authority: 29 U.S.C. 706(8)(B))

Individual with a significant disability means an individual with a severe physical, mental, cognitive, or sensory impairment whose ability to function independently in the family or community or whose ability to obtain, maintain, or advance in employment is substantially limited and for whom the delivery of IL services will improve the ability to function, continue functioning, or move toward functioning independently in the family or community or to continue in employment.

(Authority: 29 U.S.C. 706(15)(B))

Legally authorized advocate or representative means an individual who is authorized under State law to act or advocate on behalf of another individual. Under certain circumstances, State law permits only an attorney, legal guardian, or individual with a power of attorney to act or advocate on behalf of another individual. In other circumstances, State law may permit other individuals to act or advocate on behalf of another individual.

(Authority: 29 U.S.C. 711(c))

Minority group means Alaskan Natives, American Indians, Asian Americans, Blacks (African Americans), Hispanic Americans, Native Hawaiians, and Pacific Islanders.

Nonresidential means, with respect to a center, that the center, as of October 1, 1994, does not operate or manage housing or shelter for individuals as an IL service on either a temporary or long-term basis unless the housing or shelter is—

(1) Incidental to the overall operation of the center;

(2) Necessary so that the individual may receive an IL service; and

(3) Limited to a period not to exceed eight weeks during any six-month period.

(Authority: 29 U.S.C. 796a, 796f-1(f) and 706f-2(f))

Peer relationships mean relationships involving mutual support and assistance among individuals with significant disabilities who are actively pursuing IL goals.

Peer role models mean individuals with significant disabilities whose achievements can serve as a positive example for other individuals with significant disabilities.

Personal assistance services mean a range of IL services, provided by one or more persons, designed to assist an individual with a significant disability to perform daily living activities on or off the job that the individual would typically perform if the individual did not have a disability. These IL services must be designed to increase the individual's control in life and ability to perform everyday activities on or off the job.

(Authority: 29 U.S.C. 706(11))

Service provider means—

(1) A designated State unit (DSU) that directly provides IL services to individuals with significant disabilities,

(2) A center that receives financial assistance under Parts B or C of Chapter 1 of Title VII of the Act; or

(3) Any other entity or individual that meets the requirements of § 364.43(e) and provides IL services under a grant or contract from the DSU pursuant to § 364.43(b).

(Authority: 29 U.S.C. 711(c) and 796(e))

Significant disability means a severe physical, mental, cognitive, or sensory

impairment that substantially limits an individual's ability to function independently in the family or community or to obtain, maintain, or advance in employment.

State means, except for sections 711(a)(2)(A) and 721(c)(2)(A) and where otherwise specified in the Act, in addition to each of the several States of the United States, the District of Columbia, the Commonwealth of Puerto Rico, the United States Virgin Islands, Guam, American Samoa, the Commonwealth of the Northern Mariana Islands, and the Republic of Palau (until the Compact of Free Association with Palau takes effect).

(Authority: 29 U.S.C. 706(16))

State plan means the State IL plan required under section 704 of Title VII of the Act.

Transportation means travel and related expenses that are necessary to enable an individual with a significant disability to benefit from another IL service and travel and related expenses for an attendant or aide if the services of that attendant or aide are necessary to enable an individual with a significant disability to benefit from that IL service.

(Authority: 29 U.S.C. 706(30)(B)(xi) and 711(c))

Unserved and underserved groups or populations, with respect to groups or populations of individuals with significant disabilities in a State, include, but are not limited to, groups or populations of individuals with significant disabilities who—

(1) Have cognitive and sensory impairments;

(2) Are members of racial and ethnic minority groups;

(3) Live in rural areas; or

(4) Have been identified by the eligible agency as unserved or underserved within a center's project area.

(Authority: 29 U.S.C. 706, 711(c), and 796f–796f–5)

§ 364.5 What is program income and how may it be used?

(a) *Definition.* Program income means gross income received by a grantee under Title VII of the Act that is directly generated by an activity supported under 34 CFR Part 365, 366, or 367.

(b) *Sources.* Sources of program income include, but are not limited to, payments received from workers' compensation funds or fees for services to defray part or all of the costs of services provided to particular consumers.

(c) *Use of program income.* (1) Program income, whenever earned, must be used for the provision of IL services or the administration of the State plan, as appropriate.

(2) A service provider is authorized to treat program income as—

(i) A deduction from total allowable costs charged to a Federal grant, in accordance with 34 CFR 80.25(g)(1); or

(ii) An addition to the grant funds to be used for additional allowable program expenditures, in accordance with 34 CFR 80.25(g)(2).

(3) Program income may not be used to meet the non-Federal share requirement under 34 CFR 365.12(b).

(Authority: 29 U.S.C. 711(c); 34 CFR 80.25)

§ 364.6 What requirements apply to the obligation of Federal funds and program income?

(a) Except as provided in paragraph (b) of this section, any Federal funds, including reallotted funds, that are appropriated for a fiscal year to carry out a program under 34 CFR Part 365, 366, or 367 that are not obligated or expended by the DSU or center prior to the beginning of the succeeding fiscal year, and any program income received during a fiscal year that is not obligated or expended by the DSU or center prior to the beginning of the succeeding fiscal year in which the program income was received, remain available for obligation and expenditure by the DSU or center during that succeeding fiscal year.

(b) Federal funds appropriated for a fiscal year under Part B of Chapter 1 and under Chapter 2 of Title VII of the Act remain available for obligation in the succeeding fiscal year only to the extent that the DSU complied with any matching requirement by obligating, in accordance with 34 CFR 76.707, the non-Federal share in the fiscal year for which the funds were appropriated.

(Authority: 29 U.S.C. 718)

Subpart B—What Are the Application Requirements?

§ 364.10 What are the application requirements?

To receive a grant from a State's allotment of funds under Parts B and C of Chapter 1 of Title VII of the Act and 34 CFR Parts 365 and 366, a State shall submit to the Secretary, and obtain approval of, a three-year State plan meeting the requirements in Subpart C of this part.

(Approved by the Office of Management and Budget under control number 1820–0527)

(Authority: 29 U.S.C. 796c(a)(1))

§ 364.11 When must the State plan be submitted for approval?

The designated State unit (DSU) shall submit to the Secretary for approval the three-year State plan no later than July 1 of the year preceding the first fiscal year of the three-year period for which the State plan is submitted.

(Approved by the Office of Management and Budget under control number 1820–0527.)

(Authority: 29 U.S.C. 796c(a)(4))

§ 364.12 How does the Secretary approve State plans?

(a) *General.* The Secretary approves a State plan that the Secretary determines meets the requirements of section 704 of the Act and Subparts B through D of this part and disapproves a plan that does not meet these requirements.

(b) *Informal resolution.* If the Secretary intends to disapprove the State plan, the Secretary attempts to resolve disputed issues informally with State officials.

(c) *Notice of formal hearing.* If, after reasonable effort has been made to resolve the dispute informally, no resolution has been reached, the Secretary provides written notice to the DSU and the SILC of the intention to disapprove the State plan and of the opportunity for a hearing.

(d) *Hearing.* (1) If the DSU requests a hearing, the Secretary designates one or more individuals, either from the Department or elsewhere, not responsible for or connected with the Department's administration of the programs authorized by Title VII of the Act, to conduct a hearing.

(2) If more than one individual is designated, the Secretary designates one of those individuals as the Chief Hearing Official of the Hearing Panel. If one individual is designated, that individual is the Hearing Official.

(e) *Judicial review.* A State may appeal the Secretary's decision to disapprove its State plan by filing a petition for review with the U.S. Court of Appeals for the circuit in which the State is located, in accordance with section 107(d) of the Act.

(Approved by the Office of Management and Budget under control number 1820–0527)

(Authority: 29 U.S.C. 711(c) and 796d–1(a))

§ 364.13 Under what circumstances may funds be withheld, reduced, limited, or terminated?

(a) *When withheld, reduced, limited, or terminated.* Payments to a State under Chapter 1 of Title VII of the Act may be withheld, reduced, limited, or terminated as provided by section 107(c) of the Act if the Secretary finds that—

(1) The State plan has been so changed that it no longer conforms with the requirements of section 704 of the Act; or

(2) In the administration of the State plan, there is a failure to comply substantially with any provision of the plan.

(b) *Informal resolution.* If the Secretary intends to withhold, reduce, limit, or terminate payment of funds to a State under Title VII of the Act as provided by section 107(c) of the Act, the Secretary attempts to resolve disputed issues informally with State officials.

(c) *Notice of formal hearing.* If, after reasonable effort has been made to resolve the dispute informally, no resolution has been reached, the Secretary provides written notice to the DSU and SILC of the intention to withhold, reduce, limit, or terminate payment of funds under Title VII of the Act and of the opportunity for a hearing.

(d) *Hearing.* If the DSU requests a hearing, the Secretary designates an administrative law judge (ALJ) in the Office of Administrative Law Judges to conduct a hearing in accordance with the provisions of 34 CFR Part 81, Subpart A.

(e) *Initial decision.* The ALJ issues an initial decision in accordance with 34 CFR 81.41.

(f) *Petition for review of an initial decision.* The DSU may seek the Secretary's review of an ALJ's initial decision in accordance with 34 CFR 81.42.

(g) *Review by the Secretary.* The Secretary reviews an ALJ's initial decision in accordance with 34 CFR 81.43.

(h) *Final decision of the Department.* The ALJ's initial decision becomes the final decision of the Department in accordance with 34 CFR 81.44.

(i) *Judicial review.* A State may appeal the Secretary's final decision to withhold, reduce, limit, or terminate payment of funds to a State under Title VII of the Act by filing a petition for review with the U.S. Court of Appeals for the circuit in which the State is located, in accordance with section 107(d) of the Act.

(Approved by the Office of Management and Budget under control number 1820–0527)

(Authority: 29 U.S.C. 727(c)–(d) and 796d–1(a))

Subpart C—What Are the State Plan Requirements?

§ 364.20 What are the general requirements for a State plan?

(a) *Form and content.* The State plan must contain, in the form prescribed by the Secretary, the information required by this part and any other information requested by the Secretary.

(b) *Duration.* (1) The State plan must cover a three-year period and must be amended whenever necessary to reflect any material change in State law, organization, policy, or agency operations that affects the administration of the State plan.

(2) The Secretary may require a State to submit an interim State plan for a period of less than three years following a reauthorization of the Act and prior to the effective date of final regulations.

(c) *Joint development-single agency.* The State plan must be jointly—

(1) Developed by the DSU and the SILC; and

(2) Signed by the—

(i) Director of the DSU (Director); and

(ii) Chairperson of the SILC, acting on behalf of and at the direction of the SILC.

(d) *Joint development-separate agency for individuals who are blind.* If a separate State agency is authorized by State law as the sole State agency with authority to administer or supervise the administration of that part of the State plan relating to the vocational rehabilitation of individuals who are blind, the State plan must be jointly—

(1) Developed by the DSU, the SILC, and the separate State agency authorized to provide VR services for individuals who are blind; and

(2) Signed by the—

(i) Director;

(ii) Director of the separate State agency authorized to provide VR services for individuals who are blind; and

(iii) Chairperson of the SILC, acting on behalf of and at the direction of the SILC.

(3) (Cross-reference: See § 364.22(c).)

(e) The State plan must assure that, as appropriate, the DSU and SILC actively consult in the development of the State plan with the Director of the CAP authorized under section 112 of the Act.

(f) *Periodic review and revision.* The State plan must provide for the review and revision of the plan, at least once every three years, to ensure the existence of appropriate planning, financial support and coordination, and other assistance to appropriately address, on a statewide and comprehensive basis, the needs in the State for—

(1) Providing State IL services;

(2) Developing and supporting a statewide network of centers; and

(3) Working relationships between—

(i) Programs providing IL services and supporting or establishing centers; and

(ii) The VR program established under Title I of the Act, and other programs providing services for individuals with disabilities.

(g) *Public hearings.* (1) The State plan must assure that the DSU and SILC conduct public meetings to provide all segments of the public, including interested groups, organizations, and individuals, an opportunity to comment on the State plan prior to its submission to the Secretary and on any revisions to the approved State plan. The DSU and SILC may meet the public participation requirement by holding the public meetings before a preliminary draft State plan is prepared or by providing a preliminary draft State plan for comment at the public meetings.

(2) The State plan must assure that the DSU and SILC establish and maintain a written description of procedures for conducting public meetings in accordance with the following requirements:

(i) The DSU and SILC shall provide appropriate and sufficient notice of the public meetings. Appropriate and sufficient notice means notice provided at least 30 days prior to the public meeting through various media available to the general public, such as newspapers and public service announcements, and through specific contacts with appropriate constituency groups and organizations identified by the DSU and SILC.

(ii) The DSU and SILC shall make reasonable accommodation to individuals with disabilities who rely on alternative modes of communication in the conduct of the public meetings, including providing sign language interpreters and audio-loops.

(iii) The DSU and SILC shall provide the notices of the public meetings, any written material provided prior to or at the public meetings, and the approved State plan in accessible formats for individuals who rely on alternative modes of communication.

(h) The State plan must assure that, at the public meetings to develop the State plan, the DSU and SILC identify those provisions in the State plan that are State-imposed requirements. For purposes of this section, a State-imposed requirement includes any State law, regulation, rule, or policy relating to the DSU's administration or operation of IL programs under Title VII of the Act, including any rule or policy implementing any Federal law, regulation, or guideline, that is beyond what would be required to comply with the regulations in 34 CFR Parts 364, 365, 366, and 367.

(i) The State plan also must address how the specific requirements in §§ 364.21 through 364.43 and in §§ 364.56 and 364.59 will be met.

(Approved by the Office of Management and Budget under control number 1820–0527)

(Authority: 29 U.S.C. 711(c) and 796c (a) and (m)(6))

§ 364.21 What are the requirements for the Statewide Independent Living Council (SILC)?

(a) *Establishment.* (1) To be eligible to receive assistance under Chapter 1 of Title VII of the Act, each State shall establish a SILC that meets the requirements of section 705 of the Act.

(2) The SILC may not be established as an entity within a State agency, including the designated State agency or DSU. The SILC shall be independent of the DSU and all other State agencies.

(b) *Appointment and composition.* (1) *Appointment.* Members of the SILC must be appointed by the Governor or the appropriate entity within the State responsible, in accordance with State law, for making appointments.

(2) *Composition.* (i) The SILC must include—

(A) At least one director of a center chosen by the directors of centers within the State; and

(B) As ex officio, nonvoting members, a representative from the DSU and representatives from other State agencies that provide services to individuals with disabilities.

(ii) The SILC may include—

(A) Other representatives from centers;

(B) Parents and legal guardians of individuals with disabilities;

(C) Advocates of and for individuals with disabilities;

(D) Representatives from private businesses;

(E) Representatives from organizations that provide services for individuals with disabilities; and

(F) Other appropriate individuals.

(iii) A majority of the members of the SILC must be individuals with disabilities, as defined in § 364.4(b), and not employed by any State agency or center.

(c) *Qualifications.* The SILC must be composed of members—

(1) Who provide statewide representation;

(2) Who represent a broad range of individuals with disabilities; and

(3) Who are knowledgeable about centers and IL services.

(d) *Voting members.* A majority of the voting members of the SILC must be individuals with disabilities, as defined in § 364.4(b), and not employed by any State agency or center.

(e) *Chairperson.* (1) *In general.* Except as provided in paragraph (e)(2) of this section, the SILC shall select a chairperson from among the voting membership of the SILC.

(2) *Designation by Governor.* In States in which the Governor does not have veto power pursuant to State law, the Governor shall designate a voting member of the SILC to serve as the chairperson of the SILC or shall require the SILC to so designate a voting member.

(f) *Terms of appointment.* Each member of the SILC shall serve for term of three years, except that—

(1) A member appointed to fill a vacancy occurring prior to the expiration of the term for which a predecessor was appointed must be appointed for the remainder of that term;

(2) The terms of service of the members initially appointed must be (as specified by the appointing authority) for the fewer number of years as will provide for the expiration of terms on a staggered basis; and

(3) No member of the SILC may serve for more than two consecutive full terms.

(g) *Duties.* The SILC shall—

(1) Jointly develop and sign (in conjunction with the DSU) the State plan required by section 704 of the Act and § 364.20;

(2) Monitor, review, and evaluate the implementation of the State plan;

(3) Coordinate activities with the State Rehabilitation Advisory Council established under section 105 of the Act and councils that address the needs of specific disability populations and issues under other Federal law;

(4) Ensure that all regularly scheduled meetings of the SILC are open to the public and sufficient advance notice is provided; and

(5) Submit to the Secretary all periodic reports as the Secretary may reasonably request and keep all records, and afford access to all records, as the Secretary finds necessary to verify the periodic reports.

(h) *Hearings.* The SILC is authorized to hold any hearings and forums that the SILC determines to be necessary to carry out its duties.

(i) *Resource plan.* (1) The SILC shall prepare, in conjunction with the DSU, a resource plan for the provision of resources, including staff and personnel, made available under Parts B and C of Chapter 1 of Title VII of the Act, Part C of Title I of the Act, and from other public and private sources that may be necessary to carry out the functions of the SILC under this part.

(2) The SILC's resource plan must, to the maximum extent possible, rely on the use of resources in existence during the period of implementation of the State plan.

(3) No conditions or requirements may be included in the SILC's resource plan that may compromise the independence of the SILC.

(4) The SILC is responsible for the proper expenditure of funds and use of resources that it receives under the resource plan.

(5) A description of the SILC's resource plan required by paragraph (i)(1) of this section must be included in the State plan.

(j) *Staff.* (1) The SILC shall, consistent with State law, supervise and evaluate its staff and other personnel as may be necessary to carry out its functions under this section.

(2) While assisting the SILC in carrying out its duties, staff and other personnel made available to the SILC by the DSU may not be assigned duties by the designated State agency or DSU, or any other agency or office of the State, that would create a conflict of interest.

(k) *Reimbursement and compensation.* The SILC may use the resources described in paragraph (i) of this section to reimburse members of the SILC for reasonable and necessary expenses of attending SILC meetings and performing SILC duties (including child care and personal assistance services) and to pay compensation to a member of the SILC, if the member is not employed or must forfeit wages from other employment, for each day the member is engaged in performing SILC duties.

(l) *Conflict of interest.* The code of conduct provisions in 34 CFR 74.162 and the conflict of interest provisions in 34 CFR 75.524 and 75.525 apply to members of the SILC. For purposes of this paragraph and 34 CFR 74.162, 75.524, and 75.525, a SILC is not considered a government, governmental entity, or governmental recipient.

(Approved by the Office of Management and Budget under control number 1820–0527)

(Authority: 29 U.S.C. 796d)

§ 364.22 What is the State's responsibility for administration of the programs authorized by Chapter 1 of Title VII?

(a) *General.* The State plan must identify the DSU as the entity that, on behalf of the State, shall—

(1) Receive, account for, and disburse funds received by the State under Part B of Chapter 1 and section 723 of Title VII of the Act (and 34 CFR Parts 365 and 366, as applicable) based on the plan;

(2) Provide, as applicable, administrative support services for the SILS and CIL programs under Part B of Chapter 1 and section 723 of Title VII of the Act, respectively, and 34 CFR Parts 365 and 366, respectively;

(3) Keep records and afford access to these records as the Secretary finds to be necessary with respect to the SILS and CIL programs; and

(4) Submit additional information or provide assurances as the Secretary may require with respect to the SILS and CIL programs.

(b) *Provision of administrative support services.* The State plan must describe the administrative support services to be provided by the DSU under paragraph (a)(2) of this section.

(c) *Designation of State unit for individuals who are blind.* The State plan may designate a State agency or the organizational unit of a State agency that is authorized under State law to provide VR services to individuals who are blind under a State VR plan as the DSU to administer that part of the State IL plan under which IL services are provided to individuals who are blind. However, a State agency designated pursuant to this paragraph may not submit a separate State plan.

(Approved by the Office of Management and Budget under control number 1820–0527)

(Authority: 29 U.S.C. 796c(c))

§ 364.23 What are the staffing requirements?

(a) *General staffing requirement.* The State plan must assure that the staff of the service provider includes personnel who are specialists in the development and provision of IL services and in the development and support of centers.

(b) *Alternative communication needs staffing.* The State plan must also assure that, to the maximum extent feasible, the service provider makes available personnel able to communicate—

(1) With individuals with significant disabilities who rely on alternative modes of communication, such as manual communication, nonverbal communication devices, Braille, or audio tapes, and who apply for or receive IL services under Title VII of the Act; and

(2) In the native languages of individuals with significant disabilities whose English proficiency is limited and who apply for or receive IL services under Title VII of the Act.

(Approved by the Office of Management and Budget under control number 1820–0527)

(Authority: 29 U.S.C. 711(c) and 796c(a)(1))

§ 364.24 What assurances are required for staff development?

The State plan must assure that the service provider establishes and maintains a program of staff development for all classes of positions involved in providing IL services and, if appropriate, in administering the CIL program. The staff development program must emphasize improving the skills of staff directly responsible for the provision of IL services, including knowledge of and practice in the IL philosophy.

(Approved by the Office of Management and Budget under control number 1820–0527)

(Authority: 29 U.S.C. 711(c) and 796c(a)(1))

§ 364.25 What are the requirements for a statewide network of centers for independent living?

(a) The State plan must include a design for the establishment of a statewide network of centers that comply with the standards and assurances in section 725 (b) and (c) of the Act and Subparts F and G of 34 CFR Part 366.

(b) The design required by paragraph (a) of this section must identify unserved and underserved areas and must provide an order of priority for serving these areas.

(Approved by the Office of Management and Budget under control number 1820–0527)

(Authority: 29 U.S.C. 711(c) and 796c(g))

§ 364.26 What are the requirements for cooperation, coordination, and working relationships?

(a) The State plan must include steps that will be taken to maximize the cooperation, coordination, and working relationships among—

(1) The SILS program, the SILC, and centers; and

(2) The DSU, other State agencies represented on the SILC, other councils that address the needs of specific disability populations and issues, and other public and private entities determined to be appropriate by the SILC.

(b) The State plan must identify the entities to which the DSU and the SILC will relate in carrying out the requirements of paragraph (a) of this section.

(Approved by the Office of Management and Budget under control number 1820–0527)

(Authority: 29 U.S.C. 796c(i))

§ 364.27 What are the requirements for coordinating independent living (IL) services?

The State plan must describe how IL services funded under Chapter 1 of Title VII of the Act will be coordinated with, and complement, other services, to avoid unnecessary duplication with other Federal, State, and local programs, including the OIB program authorized by Chapter 2 of Title VII of the Act, that provide IL- or VR-related services. This description must include those services provided by State and local agencies administering the special education, vocational education, developmental disabilities services, public health, mental health, housing, transportation, and veterans' programs, and the programs authorized under Titles XVIII through XX of the Social Security Act within the State.

(Approved by the Office of Management and Budget under control number 1820–0527)

(Authority: 29 U.S.C. 796c(j) and 752(i)(2)(C))

§ 364.28 What requirements relate to IL services for older individuals who are blind?

The State plan must include an assurance that the DSU will seek to incorporate into and describe in the State plan any new methods or approaches for the provision to older individuals who are blind of IL services that are developed under a project funded under Chapter 2 of Title VII of the Act and that the DSU determines to be effective.

(Approved by the Office of Management and Budget under control number 1820–0527)

(Authority: 29 U.S.C. 711(c), 796c(j), and 796k(h))

§ 364.29 What are the requirements for coordinating Federal and State sources of funding?

(a) The State plan must describe efforts to coordinate Federal and State funding for centers and IL services.

(b) The State plan must identify the amounts, sources, and purposes of the funding to be coordinated under paragraph (a) of this section, including the amount of State funds earmarked for the general operation of centers.

(c) Cross-reference: See 34 CFR 366.30(a).

(Approved by the Office of Management and Budget under control number 1820–0527)

(Authority: 29 U.S.C. 796c(k))

§ 364.30 What notice must be given about the Client Assistance Program (CAP)?

The State plan must include satisfactory assurances that all service providers will use formats that are accessible to notify individuals seeking or receiving IL services under Chapter 1 of Title VII about—

(a) The availability of the CAP authorized by section 112 of the Act;

(b) The purposes of the services provided under the CAP; and

(c) How to contact the CAP.

(Approved by the Office of Management and Budget under control number 1820–0527)

(Authority: 29 U.S.C. 718a and 796c(m)(1))

§ 364.31 What are the affirmative action requirements?

The State plan must include satisfactory assurances that all recipients of financial assistance under Parts B and C of Chapter 1 of Title VII

of the Act will take affirmative action to employ and advance in employment qualified individuals with significant disabilities on the same terms and conditions required with respect to the employment of individuals with disabilities under section 503 of the Act.

(Approved by the Office of Management and Budget under control number 1820–0527)

(Authority: 29 U.S.C. 796c(m)(2))

§ 364.32 What are the requirements for outreach?

(a) With respect to IL services and centers funded under Chapter 1 of Title VII of the Act, the State plan must include steps to be taken regarding outreach to populations in the State that are unserved or underserved by programs under Title VII, including minority groups and urban and rural populations.

(b) The State plan must identify the populations to be designated for targeted outreach efforts under paragraph (a) of this section and the geographic areas (i.e., communities) in which they reside.

(Approved by the Office of Management and Budget under control number 1820–0527)

(Authority: 29 U.S.C. 796c(l))

§ 364.33 What is required to meet minority needs?

The State plan must demonstrate how the State will address the needs of individuals with significant disabilities from minority group backgrounds.

(Approved by the Office of Management and Budget under control number 1820–0527)

(Authority: 29 U.S.C. 711(c), 718b(b), and 796c(l))

§ 364.34 What are the fiscal and accounting requirements?

In addition to complying with applicable EDGAR fiscal and accounting requirements, the State plan must include satisfactory assurances that all recipients of financial assistance under Parts B and C of Chapter 1 of Title VII of the Act will adopt those fiscal control and fund accounting procedures as may be necessary to ensure the proper disbursement of and accounting for those funds.

(Approved by the Office of Management and Budget under control number 1820–0527)

(Authority: 29 U.S.C. 796c(m)(3))

§ 364.35 What records must be maintained?

In addition to complying with applicable EDGAR recordkeeping requirements, the State plan must include satisfactory assurances that all recipients of financial assistance under Parts B and C of Chapter 1 of Title VII of the Act will maintain—

(a) Records that fully disclose and document—

(1) The amount and disposition by the recipient of that financial assistance;

(2) The total cost of the project or undertaking in connection with which the financial assistance is given or used;

(3) The amount of that portion of the cost of the project or undertaking supplied by other sources; and

(4) Compliance with the requirements of Chapter 1 of Title VII of the Act and this part; and

(b) Other records that the Secretary determines to be appropriate to facilitate an effective audit.

(Approved by the Office of Management and Budget under control number 1820–0527)

(Authority: 29 U.S.C. 796c(m)(4))

§ 364.36 What are the reporting requirements?

With respect to the records that are required by § 364.35, the State plan must include satisfactory assurances that all recipients of financial assistance under Parts B and C of Chapter 1 of Title VII of the Act will submit reports that the Secretary determines to be appropriate.

(Approved by the Office of Management and Budget under control number 1820–0527)

(Authority: 29 U.S.C. 796c(m)(4)(D))

§ 364.37 What access to records must be provided?

For the purpose of conducting audits, examinations, and compliance reviews, the State plan must include satisfactory assurances that all recipients of financial assistance under Parts B and C of Chapter 1 and Chapter 2 of Title VII of the Act will provide access to the Secretary and the Comptroller General, or any of their duly authorized representatives, to—

(a) The records maintained under § 364.35;

(b) Any other books, documents, papers, and records of the recipients that are pertinent to the financial assistance received under Chapter 1 of Title VII of the Act; and

(c) All individual case records or files or consumer service records of individuals served under 34 CFR Part 365, 366, or 367, including names, addresses, photographs, and records of evaluation included in those individual case records or files or consumer service records.

(Approved by the Office of Management and Budget under control number 1820–0527)

(Authority: 29 U.S.C. 711(c) and 796c(m)(4)(c) and (5))

§ 364.38 What methods of evaluation must the State plan include?

The State plan must establish a method for the periodic evaluation of the effectiveness of the plan in meeting the objectives established in § 364.42, including evaluation of satisfaction by individuals with significant disabilities who have participated in the program.

(Approved by the Office of Management and Budget under control number 1820–0527)

(Authority: 29 U.S.C. 796c(n))

§ 364.39 What requirements apply to the administration of grants under the Centers for Independent Living program?

In States in which State funding for centers equals or exceeds the amount of funds allotted to the State under Part C of Title VII of the Act, as determined pursuant to 34 CFR 366.29 and 366.31, and in which the State elects to administer the CIL program as provided in section 723 of the Act, the State plan must include policies, practices, and procedures, including the order of priorities that the State may establish pursuant to 34 CFR 366.34(a), that are consistent with section 723 of the Act to govern the awarding of grants to centers and the oversight of these centers.

(Approved by the Office of Management and Budget under control number 1820–0527)

(Authority: 29 U.S.C. 796c (g) and (h), 796f–1(d), and 796f–2(d))

§ 364.40 Who is eligible to receive IL services?

The State plan must assure that—

(a) Any individual with a significant disability, as defined in § 364.4(b), is eligible for IL services under the SILS and CIL programs authorized under Chapter 1 of Title VII of the Act;

(b) Any individual may seek information about IL services under these programs and request referral to other services and programs for individuals with significant disabilities, as appropriate; and

(c) The determination of an individual's eligibility for IL services under the SILS and CIL programs meets the requirements of § 364.51.

(Approved by the Office of Management and Budget under control number 1820–0527)

(Authority: 29 U.S.C. 706(15)(B) and 796b)

§ 364.41 What assurances must be included regarding eligibility?

(a) The State plan must assure that the service provider applies eligibility requirements without regard to age, color, creed, gender, national origin, race, religion, or type of significant disability of the individual applying for IL services.

(b) The State plan must assure that the service provider does not impose any

State or local residence requirement that excludes under the plan any individual who is present in the State and who is otherwise eligible for IL services from receiving IL services.

(Approved by the Office of Management and Budget under control number 1820–0527)

(Authority: 29 U.S.C. 711(c) and 796c(a)(1))

§ 364.42 What objectives and information must be included in the State plan?

(a) The State plan must specifically describe—

(1) The objectives to be achieved;

(2) The financial plan for the use of Federal and non-Federal funds to meet these objectives. The financial plan must identify the source and amounts of other Federal and non-Federal funds to be used to meet these objectives; and

(3) How funds received under sections 711, 721, and 752 of the Act will further these objectives.

(b) The objectives required by paragraph (a) of this section must address—

(1) The overall goals and mission of the State's IL programs and services;

(2) The various priorities for the types of services and populations to be served; and

(3) The types of services to be provided.

(c) In developing the objectives required by paragraph (a) of this section, the DSU and the SILC shall consider, and incorporate if appropriate, the priorities and objectives established by centers pursuant to section 725(c)(4) of the Act.

(d) The State plan must establish timeframes for the achievement of the objectives required by paragraph (a) of this section.

(e) The State plan must explain how the objectives required by paragraph (a) of this section are consistent with and further the purpose of Chapter 1 of Title VII of the Act, as stated in section 701 of the Act and § 364.2.

(Approved by the Office of Management and Budget under control number 1820–0527)

(Authority: 29 U.S.C. 796c(d))

§ 364.43 What requirements apply to the provision of State IL services?

(a) The State plan must describe the extent and scope of IL services to be provided under Title VII of the Act to meet the objectives stated in § 364.42.

(b) The State plan must provide that the State directly, or through grants or contracts, will provide IL services with Federal, State, or other funds.

(c) Unless the individual signs a waiver stating that an IL plan is unnecessary, IL services provided to individuals with significant disabilities must be in accordance with an IL plan that meets the requirements of § 364.52 and that is mutually agreed upon by—

(1) An appropriate staff member of the service provider; and

(2) The individual.

(d) If the State provides the IL services that it is required to provide by paragraph (b) of this section through grants or contracts with third parties, the State plan must describe these arrangements.

(e) If the State contracts with or awards a grant to a center for the general operation of the center, the State shall delegate to the center the determination of an individual's eligibility for services from that center. If the State contracts with or awards a grant to a third party to provide specific IL services, the State may choose to delegate to the IL service provider the determination of eligibility for these services and the development of an IL plan for individuals who receive these services.

(Approved by the Office of Management and Budget under control number 1820–0527)

(Authority: 29 U.S.C. 711(c), 796c(e)–(f), and 796f–4(b)(2))

Subpart D—What Conditions Must Be Met After an Award?

§ 364.50 What requirements apply to the processing of referrals and applications?

The service provider shall apply the standards and procedures established by the DSU pursuant to 34 CFR 365.30 to ensure expeditious and equitable handling of referrals and applications for IL services from individuals with significant disabilities.

(Authority: 29 U.S.C. 711(c) and 796–796f–5)

§ 364.51 What requirements apply to determinations of eligibility or ineligibility?

(a) *Eligibility.* (1) Before or at the same time as an applicant for IL services may begin receiving IL services funded under this part, the service provider shall determine the applicant's eligibility and maintain documentation that the applicant has met the basic requirements specified in § 364.40.

(2) The documentation must be dated and signed by an appropriate staff member of the service provider.

(b) *Ineligibility.* (1) If a determination is made that an applicant for IL services is not an individual with a significant disability, the service provider shall provide documentation of the ineligibility determination that is dated and signed by an appropriate staff member.

(2)(i) The service provider may determine an applicant to be ineligible for IL services only after full consultation with the applicant or, if the applicant chooses, the applicant's parent, guardian, or other legally authorized advocate or representative, or after providing a clear opportunity for this consultation.

(ii) The service provider shall notify the applicant in writing of the action taken and inform the applicant or, if the applicant chooses, the applicant's parent, guardian, or other legally authorized advocate or representative, of the applicant's rights and the means by which the applicant may appeal the action taken. (Cross-reference: See § 364.58(a).)

(iii) The service provider shall provide a detailed explanation of the availability and purposes of the CAP established within the State under section 112 of the Act, including information on how to contact the program.

(iv) If appropriate, the service provider shall refer the applicant to other agencies and facilities, including the State's VR program under 34 CFR Part 361.

(c) *Review of ineligibility determination.* (1) If an applicant for IL services has been found ineligible, the service provider shall review the applicant's ineligibility at least once within 12 months after the ineligibility determination has been made and whenever the service provider determines that the applicant's status has materially changed.

(2) The review need not be conducted in situations where the applicant has refused the review, the applicant is no longer present in the State, or the applicant's whereabouts are unknown.

(Approved by the Office of Management and Budget under control number 1820–0527)

(Authority: 29 U.S.C. 711(c) and 796c(e))

§ 364.52 What are the requirements for an IL plan?

(a) *General.* (1) Unless the individual who is to be provided IL services under this part signs a waiver in accordance with paragraph (a)(2) of this section, the service provider, in collaboration with the individual with a significant disability, shall develop and periodically review an IL plan for the individual in accordance with the requirements in § 364.43(c) and paragraphs (b) through (e) of this section.

(2) The requirements of this section with respect to an IL plan do not apply if the individual knowingly and voluntarily signs a waiver stating that an IL plan is unnecessary.

(3) Subject to paragraph (a)(2) of this section, the service provider shall provide each IL service in accordance with the IL plan.

(b) *Initiation and development of an IL plan.* (1) Development of an individual's IL plan must be initiated after documentation of eligibility under § 364.51(a) and must indicate the goals or objectives established, the services to be provided, and the anticipated duration of the service program and each component service.

(2) The IL plan must be developed jointly and signed by the appropriate staff member of the service provider and the individual with a significant disability or, if consistent with State law and the individual chooses, the individual's guardian, parent, or other legally authorized advocate or representative.

(3) A copy of the IL plan, and any amendments, must be provided in an accessible format to the individual with a significant disability or, if consistent with State law and the individual chooses, the individual's guardian, parent, or other legally authorized advocate or representative.

(c) *Review.* (1) The IL plan must be reviewed as often as necessary but at least on an annual basis to determine whether services should be continued, modified, or discontinued, or whether the individual should be referred to a program of VR services under 34 CFR Part 361 or to any other program of assistance.

(2) Each individual with a significant disability or, if consistent with State law and the individual chooses, the individual's guardian, parent, or other legally authorized advocate or representative, must be given an opportunity to review the IL plan and, if necessary, jointly redevelop and agree by signature to its terms.

(d) *Coordination with vocational rehabilitation, developmental disabilities, and special education programs.* The development of the IL plan and the provision of IL services must be coordinated to the maximum extent possible with any individualized—

(1) Written rehabilitation program for VR services for that individual;

(2) Habilitation program for the individual prepared under the Developmental Disabilities Assistance and Bill of Rights Act; and

(3) Education program for the individual prepared under Part B of the Individuals with Disabilities Education Act.

(e) *Termination of services.* If the service provider intends to terminate services to an individual receiving IL services under an IL plan, the service provider shall follow the procedures in § 364.51(b)(2)(ii) through (iv) and (c).

(Approved by the Office of Management and Budget under control number 1820–0527)

(Authority: 29 U.S.C. 711(c) and 796c(e) and (j))

§ 364.53 What records must be maintained for the individual?

For each applicant for IL services (other than information and referral) and for each individual receiving IL services (other than information and referral), the service provider shall maintain a consumer service record that includes—

(a) Documentation concerning eligibility or ineligibility for services;

(b) The services requested by the consumer;

(c) Either the IL plan developed with the consumer or a waiver signed by the consumer stating that an IL plan is unnecessary;

(d) The services actually provided to the consumer; and

(e) The IL goals or objectives—

(1) Established with the consumer, whether or not in the consumer's IL plan; and

(2) Achieved by the consumer.

(f) A consumer service record may be maintained either electronically or in written form, except that the IL plan and waiver must be in writing.

(Approved by the Office of Management and Budget under control number 1820–0527)

(Authority: 29 U.S.C. 711(c), 712 and 796c(m)(4)(B))

§ 364.54 What are the durational limitations on IL services?

The service provider may not impose any uniform durational limitations on the provision of IL services, except as otherwise provided by Federal law or regulation.

(Authority: 29 U.S.C. 711(c) and 796–796f–5)

§ 364.55 What standards shall service providers meet?

In providing IL services to individuals with significant disabilities, service providers shall comply with—

(a) The written standards for IL service providers established by the DSU pursuant to 34 CFR 365.31; and

(b) All applicable State or Federal licensure or certification requirements.

(Authority: 29 U.S.C. 711(c) and 796–796f–5)

§ 364.56 What are the special requirements pertaining to the protection, use, and release of personal information?

(a) *General provisions.* The State plan must assure that each service provider will adopt and implement policies and procedures to safeguard the confidentiality of all personal information, including photographs and lists of names. These policies and procedures must assure that—

(1) Specific safeguards protect current and stored personal information;

(2) All applicants for, or recipients of, IL services and, as appropriate, those individuals' legally authorized representatives, service providers, cooperating agencies, and interested persons are informed of the confidentiality of personal information and the conditions for gaining access to and releasing this information;

(3) All applicants or their legally authorized representatives are informed about the service provider's need to collect personal information and the policies governing its use, including—

(i) Identification of the authority under which information is collected;

(ii) Explanation of the principal purposes for which the service provider intends to use or release the information;

(iii) Explanation of whether providing requested information to the service provider is mandatory or voluntary and the effects to the individual of not providing requested information;

(iv) Identification of those situations in which the service provider requires or does not require informed written consent of the individual or his or her legally authorized representative before information may be released; and

(v) Identification of other agencies to which information is routinely released;

(4) Persons who are unable to communicate in English or who rely on alternative modes of communication must be provided an explanation of service provider policies and procedures affecting personal information through methods that can be adequately understood by them;

(5) At least the same protections are provided to individuals with significant disabilities as provided by State laws and regulations; and

(6) Access to records is governed by rules established by the service provider and any fees charged for copies of records are reasonable and cover only extraordinary costs of duplication or making extensive searches.

(b) *Service provider use.* All personal information in the possession of the service provider may be used only for the purposes directly connected with the provision of IL services and the administration of the IL program under which IL services are provided. Information containing identifiable personal information may not be shared with advisory or other bodies that do not have official responsibility for the provision of IL services or the administration of the IL program under which IL services are provided. In the provision of IL services or the administration of the IL program under

which IL services are provided, the service provider may obtain personal information from other service providers and cooperating agencies under assurances that the information may not be further divulged, except as provided under paragraphs (c), (d), and (e) of this section.

(c) *Release to recipients of IL services.* (1) Except as provided in paragraphs (c)(2) and (c)(3) of this section, if requested in writing by a recipient of IL services, the service provider shall release all information in that individual's record of services to the individual or the individual's legally authorized representative in a timely manner.

(2) Medical, psychological, or other information that the service provider determines may be harmful to the individual may not be released directly to the individual, but must be provided through a qualified medical or psychological professional or the individual's legally authorized representative.

(3) If personal information has been obtained from another agency or organization, it may be released only by, or under the conditions established by, the other agency or organization.

(d) *Release for audit, evaluation, and research.* Personal information may be released to an organization, agency, or individual engaged in audit, evaluation, or research activities only for purposes directly connected with the administration of an IL program, or for purposes that would significantly improve the quality of life for individuals with significant disabilities and only if the organization, agency, or individual assures that—

(1) The information will be used only for the purposes for which it is being provided;

(2) The information will be released only to persons officially connected with the audit, evaluation, or research;

(3) The information will not be released to the involved individual;

(4) The information will be managed in a manner to safeguard confidentiality; and

(5) The final product will not reveal any personally identifying information without the informed written consent of the involved individual or the individual's legally authorized representative.

(e) *Release to other programs or authorities.* (1) Upon receiving the informed written consent of the individual or, if appropriate, the individual's legally authorized representative, the service provider may release personal information to another agency or organization for the latter's program purposes only to the extent that the information may be released to the involved individual and only to the extent that the other agency or organization demonstrates that the information requested is necessary for the proper administration of its program.

(2) Medical or psychological information may be released pursuant to paragraph (e)(1) of this section if the other agency or organization assures the service provider that the information will be used only for the purpose for which it is being provided and will not be further released to the individual.

(3) The service provider shall release personal information if required by Federal laws or regulations.

(4) The service provider shall release personal information in response to investigations in connection with law enforcement, fraud, or abuse, unless expressly prohibited by Federal or State laws or regulations, and in response to judicial order.

(5) The service provider also may release personal information to protect the individual or others if the individual poses a threat to his or her safety or to the safety of others.

(Authority: 29 U.S.C. 711(c))

§ 364.57 What functions and responsibilities may the State delegate?

A DSU may carry out the functions and responsibilities described in §§ 364.50, 364.51 (subject to 364.43(d)), 364.52, 364.53, and 364.56 or, except as otherwise provided, may delegate these functions and responsibilities to the appropriate service provider with which the DSU subgrants or contracts to provide IL services.

(Authority: 29 U.S.C. 711(c), 796c(f) and 796e–2)

§ 364.58 What appeal procedures must be available to consumers?

Each service provider shall—

(a) Establish policies and procedures that an individual may use to obtain review of decisions made by the service provider concerning the individual's request for IL services or the provision of IL services to the individual; and

(b) Use formats that are accessible to inform each individual who seeks or is receiving IL services from the service provider about the procedures required by paragraph (a) of this section.

(Authority: 29 U.S.C. 711(c))

§ 364.59 May an individual's ability to pay be considered in determining his or her participation in the costs of IL services?

(a) *No Federal requirement or prohibition.*

(1) A State is neither required to allow nor prohibited from allowing service providers to charge consumers for the cost of IL services.

(2) If a State allows service providers to charge consumers for the cost of IL services, a State is neither required to allow nor prohibited from allowing service providers to consider the ability of individual consumers to pay for the cost of IL services in determining how much a particular consumer must contribute to the costs of a particular IL service.

(b) *State plan requirements.* If a State chooses to allow service providers to charge consumers for the cost of IL services or if a State chooses to allow service providers to consider the ability of individual consumers to pay for the cost of IL services, the State plan must—

(1) Specify the types of IL services for which costs may be charged and for which a financial need test may be applied; and

(2) Assure that any consideration of financial need is applied uniformly so that all individuals who are eligible for IL services are treated equally.

(c) *Financial need.* Consistent with paragraph (b) of this section, a service provider may choose to charge consumers for the cost of IL services or may choose to consider the financial need of an individual who is eligible for IL services.

(d) *Written policies and documentation.* If the service provider chooses to consider financial need—

(1) It shall maintain written policies covering the specific types of IL services for which a financial need test will be applied; and

(2) It shall document the individual's participation in the cost of any IL services, including the individual's financial need.

(Approved by the Office of Management and Budget under control number 1820–0527)

(Authority: 29 U.S.C. 711(c))

PART 365—STATE INDEPENDENT LIVING SERVICES

Subpart A—General

Sec.
365.1 What is the State Independent Living Services (SILS) program?
365.2 Who is eligible for an award?
365.3 What regulations apply?

Subpart B—How Does the Secretary Make a Grant to a State?

365.10 How does a State apply for a grant?
365.11 How is the allotment of Federal funds for State independent living (IL) services computed?
365.12 How are payments from allotments for IL services made?
365.13 What requirements apply if the State's non-Federal share is in cash?

365.14 What conditions relating to cash or in-kind contributions apply to awards to grantees, subgrantees, or contractors?
365.15 What requirements apply if the State's non-Federal share is in kind?
365.16 What requirements apply to refunds and rebates?

Subpart C—For What Purpose Are Funds Authorized or Required To Be Used?

365.20 What are the authorized uses of funds?
365.21 What funds may the State use to provide the IL core services?
365.22 What additional IL services may the State provide?
365.23 How does a State make a subgrant or enter into a contract?

Subpart D—What Conditions Must Be Met After an Award?

365.30 What are the standards for processing referrals and applications?
365.31 What are the standards for service providers?

Authority: 29 U.S.C. 796e–796e–2, unless otherwise noted.

Subpart A—General

§ 365.1 What is the State Independent Living Services (SILS) program?

The Secretary provides financial assistance to States under the SILS program authorized by Part B of Chapter 1 of Title VII of the Act to—

(a) Provide the resources described in the resource plan required by section 705(e) of the Act and 34 CFR 364.21(d) relating to the Statewide IL Council (SILC);

(b) Provide to individuals with significant disabilities the independent living (IL) services required by section 704(e) of the Act;

(c) Demonstrate ways to expand and improve IL services;

(d) Support the operation of centers for independent living (centers) that are in compliance with the standards and assurances in section 725 (b) and (c) of the Act and Subparts F and G of 34 CFR Part 366;

(e) Support activities to increase the capacities of public or nonprofit agencies and organizations and other entities to develop comprehensive approaches or systems for providing IL services;

(f) Conduct studies and analyses, gather information, develop model policies and procedures, and present information, approaches, strategies, findings, conclusions, and recommendations to Federal, State, and local policy makers in order to enhance IL services for individuals with significant disabilities;

(g) Train individuals with significant disabilities, individuals with disabilities, individuals providing services to individuals with significant disabilities, and other persons regarding the IL philosophy; and

(h) Provide outreach to populations that are unserved or underserved by programs under Title VII of the Act, including minority groups and urban and rural populations.

(Authority: 29 U.S.C. 796e)

§ 365.2 Who is eligible for an award?

Any designated State unit (DSU) identified by the State pursuant to 34 CFR 364.22 is eligible to apply for assistance under this part in accordance with 34 CFR 364.10 and 364.11.

(Approved by the Office of Management and Budget under control number 1820–0527)

(Authority: 29 U.S.C. 796c(a)(1) and (c) and 796e(a))

§ 365.3 What regulations apply?

The following regulations apply to this part:

(a) The regulations in 34 CFR Part 364.

(b) The regulations in this Part 365.

(Authority: 29 U.S.C. 711(c) and 796e)

Subpart B—How Does the Secretary Make a Grant to a State?

§ 365.10 How does a State apply for a grant?

To receive a grant under this part, a State shall submit to the Secretary and obtain approval of a State plan that meets the requirements of Part A of Title VII of the Act and Subparts B and C of 34 CFR Part 364.

(Approved by the Office of Management and Budget under control number 1820–0527.)

(Authority: 29 U.S.C. 796c(a)(1) and (c) and 796e(a))

§ 365.11 How is the allotment of Federal funds for State independent living (IL) services computed?

(a) The allotment of Federal funds for State IL services for each State is computed in accordance with the requirements of section 711(a)(1) of the Act.

(b) The allotment of Federal funds for Guam, American Samoa, the United States Virgin Islands, the Commonwealth of the Northern Mariana Islands, and the Republic of Palau is computed in accordance with section 711(a)(2) of the Act.

(c) If the State plan designates, pursuant to § 364.22(c), a unit to administer the part of the plan under which State IL services are provided for individuals who are blind and a separate or different unit to administer the rest of the plan, the division of the State's allotment between these two units is a matter for State determination.

(Authority: 29 U.S.C. 711(c) and 796e(a))

§ 365.12 How are payments from allotments for IL services made?

(a) From the allotment of a State for a fiscal year under § 365.11, the Secretary pays to the State the Federal share of the expenditures incurred by the State during the year in accordance with the State plan approved under section 706 of the Act. After any necessary adjustments resulting from previously made overpayments or underpayments, the payments may be made in advance or by reimbursement, in installments, and on conditions that the Secretary may determine.

(b)(1) The Federal share with respect to any State for any fiscal year is 90 percent of the expenditures incurred by the State during that fiscal year under its State plan approved under section 706 of the Act.

(2) The non-Federal share of the cost of any project that receives assistance through an allotment under this part may be provided in cash or in kind, fairly evaluated, including plant, equipment, or services.

(Authority: U.S.C. 796e–1)

§ 365.13 What requirements apply if the State's non-Federal share is in cash?

(a) Except as further limited by paragraph (b) of this section, expenditures that meet the requirements of 34 CFR 80.24(a) through (b)(6) may be used to meet the non-Federal share matching requirement under section 712(b) of the Act if—

(1) The expenditures are made with funds made available by appropriation directly to the designated State agency or with funds made available by allotment or transfer from any other unit of State or local government;

(2) The expenditures are made with cash contributions from a donor that are deposited in the account of the designated State agency in accordance with State law for expenditure by, and at the sole discretion of, the DSU for activities identified or described in the State plan and authorized by § 365.20; or

(3) The expenditures are made with cash contributions from a donor that are earmarked for meeting the State's share for—

(i) Providing particular services (e.g., personal assistance services);

(ii) Serving individuals with certain types of disabilities (e.g., older individuals who are blind);

(iii) Providing services to specific groups that State or Federal law permits to be targeted for services (e.g., children of migrant laborers); or

(iv) Carrying out particular types of administrative activities permissible under State law.

(b) Cash contributions are permissible under paragraph (a)(3) of this section only if the cash contributions are not used for expenditures that benefit or will benefit in any way the donor, an individual to whom the donor is related by blood or marriage or with whom the donor has a close personal relationship, or an individual, entity, or organization with whom the donor shares a financial interest.

(c) The receipt of a grant, subgrant, or contract under section 713 of the Act or a grant, subgrant, or assistance contract under section 723 of the Act from the DSU is not considered a benefit to the donor of a cash contribution for purposes of paragraph (b) of this section if the grant, subgrant, or contract was awarded under the State's regular competitive procedures.

(d) For purposes of this section, a donor may be a private agency, a profit-making or nonprofit organization, or an individual.

(Authority: 29 U.S.C. 711(c) and 796e–1(b))

§ 365.14 What conditions relating to cash or in-kind contributions apply to awards to grantees, subgrantees, or contractors?

(a) A State may not condition the award of a grant, subgrant, or contract under section 713 of the Act or a grant, subgrant, or assistance contract under section 723 of the Act on the requirement that the applicant for the grant or subgrant make a cash or in-kind contribution of any particular amount or value to the State.

(b) An individual, entity, or organization that is a grantee or subgrantee of the State, or has a contract with the State, may not condition the award of a subgrant or subcontract under section 713 of the Act or section 723 of the Act on the requirement that the applicant for the subgrant or subcontract make a cash or in-kind contribution of any particular amount or value to the State or to the grantee or contractor of the State.

(Authority: 29 U.S.C. 711(c) and 796e–1(b))

§ 365.15 What requirements apply if the State's non-Federal share is in kind?

Subject to § 365.14, in-kind contributions may be—

(a) Used to meet the matching requirement under section 712(b) of the Act if the in-kind contributions meet the requirements of 34 CFR 80.24 (b)(7) through (g) and if the in-kind contributions would be considered allowable costs under this part, as determined by the cost principles made applicable by either Subpart Q of 34 CFR Part 74 or 34 CFR 80.22, as appropriate; and

(b) Made to the program or project by the State or by a third party (i.e., an individual, entity, or organization, whether local, public, private, for profit, or nonprofit), including a third party that is a grantee, subgrantee, or contractor that is receiving or will receive assistance under section 713 or 723 of the Act.

(Authority: 29 U.S.C. 711(c) and 796e–1(b))

§ 365.16 What requirements apply to refunds and rebates?

The following must be treated as a reduction of expenditures charged to the grant, subgrant, or contract awarded under this part and may not be used for meeting the State's matching requirement under section 712(b) of the Act:

(a) Rebates, deductions, refunds, discounts, or reductions to the price of goods, products, equipment, rental property, real property, or services.

(b) Premiums, bonuses, gifts, and any other payments related to the purchase of goods, products, equipment, rental property, real property, or services.

(Authority: 29 U.S.C. 711(c), 796e–1(b), and OMB Circulars A–87 and A–122)

Subpart C—For What Purpose Are Funds Authorized or Required To Be Used?

§ 365.20 What are the authorized uses of funds?

The State may use funds received under this part to support the activities listed in § 365.1 and to meet its obligation under section 704(e) of the Act and 34 CFR 364.43(b).

(Authority: 29 U.S.C. 796e–2)

§ 365.21 What funds may the State use to provide the IL core services?

(a) In providing IL services as required under section 704(e) of the Act and 34 CFR 364.43(b), a State may use funds provided under this part to provide directly, or through grants or contracts, the following IL core services:

(1) Information and referral services.

(2) IL skills training.

(3) Peer counseling, including cross-disability peer counseling.

(4) Individual and systems advocacy.

(b) Information and referral services may be provided independently of the other services described in paragraph (a) of this section and without regard to Subpart G of 34 CFR Part 366.

(Authority: 29 U.S.C. 711(c) and 796c(e))

§ 365.22 What additional IL services may the State provide?

In addition to the IL core services that the State may provide pursuant to § 365.21(a) with funds received under Part B of Chapter 1 of Title VII of the Act, the State also may use funds received under Part B of Chapter 1 of Title VII of the Act to provide other IL services defined in 34 CFR 364.4 (Independent living services).

(Authority: 29 U.S.C. 796e–2(1))

§ 365.23 How does a State make a subgrant or enter into a contract?

If a State makes a subgrant or enters into a contract to provide IL services to meet its obligation under section 704(e) of the Act—

(a) The provisions of this part apply to both the State and the entity or individual to whom it awards a subgrant or with whom it enters into a contract; and

(b) The provisions concerning the administration of subgrants and contracts in 34 CFR Parts 76 and 80 apply to the State.

(c) Cross-reference: See 34 CFR Parts 74, 76, and 80.

(Authority: 29 U.S.C. 711(c), 796c(f), and 796e–2)

Subpart D—What Conditions Must Be Met After an Award?

§ 365.30 What are the standards for processing referrals and applications?

The DSU shall develop, establish, and maintain written standards and procedures to be applied by service providers to assure expeditious and equitable handling of referrals and applications for IL services from individuals with significant disabilities.

(Approved by the Office of Management and Budget under control number 1820–0527.)

(Authority: 29 U.S.C. 711(c) and 796e)

§ 365.31 What are the standards for service providers?

(a) The DSU shall develop, establish, make available to the public, maintain, and implement written minimum standards for the provision of—

(1) IL services to be met by service providers that are not centers; and

(2) Specialized IL services to individuals with significant disabilities by centers under a contract with the DSU.

(b) The minimum standards developed pursuant to paragraph (a)(2) of this section may differ from the standards and assurances in section 725 of the Act and Subparts F and G of 34 CFR Part 366.

(c) The DSU shall assure that participating service providers meet all applicable State licensure or certification requirements.

(Approved by the Office of Management and Budget under control number 1820–0527.)

(Authority: 29 U.S.C. 711(c))

PART 366—CENTERS FOR INDEPENDENT LIVING

Subpart A—General

Sec.
366.1 What is the Centers for Independent Living (CIL) program?
366.2 What agencies are eligible for assistance under the CIL program?
366.3 What activities may the Secretary fund?
366.4 What regulations apply?
366.5 How are program funds allotted?

Subpart B—Training and Technical Assistance

366.10 What agencies are eligible for assistance to provide training and technical assistance?
366.11 What financial assistance does the Secretary provide for training and technical assistance?
366.12 How does the Secretary make an award?
366.13 How does the Secretary determine funding priorities?
366.14 How does the Secretary evaluate an application?
366.15 What selection criteria does the Secretary use?

Subpart C—Grants to Centers for Independent Living (Centers) in States in Which Federal Funding Exceeds State Funding

366.20 When does the Secretary award grants to centers?
366.21 What are the application requirements for existing eligible agencies?
366.22 What is the order of priorities?
366.23 What grants must be made to existing eligible agencies?
366.24 How is an award made to a new center?
366.25 What additional factor does the Secretary use in making a grant for a new center under § 366.24?
366.26 How does the Secretary evaluate an application?
366.27 What selection criteria does the Secretary use?
366.28 Under what circumstances may the Secretary award a grant to a center in one State to serve individuals in another State?

Subpart D—Grants to Centers in States in Which State Funding Equals or Exceeds Federal Funding

Determining Whether State Funding Equals or Exceeds Federal Funding

366.29 When may the Director of the designated State unit (DSU) award grants to centers?
366.30 What are earmarked funds?
366.31 What happens if the amount of earmarked funds does not equal or exceed the amount of Federal funds for a preceding fiscal year?

Awarding Grants

366.32 Under what circumstances may the DSU make grants?
366.33 What are the application requirements for existing eligible agencies?
366.34 What is the order of priorities?
366.35 What grants must be made to existing eligible agencies?
366.36 How is an award made to a new center?
366.37 What procedures does the Director of the DSU (Director) use in making a grant for a new center?
366.38 What are the procedures for review of centers?

Subpart E—Enforcement and Appeals Procedures

366.39 What procedures does the Secretary use for enforcement?
366.40 How does the Director initiate enforcement procedures?
366.41 What must be included in an initial written notice from the Director?
366.42 When does a Director issue a final written decision?
366.43 What must be included in the Director's final written decision?
366.44 How does a center appeal a decision included in a Director's initial written notice or a Director's final written decision?
366.45 What must a Director do upon receipt of a copy of a center's formal written appeal to the Secretary?
366.46 How does the Secretary review a center's appeal of a decision included in a Director's initial written notice or a Director's final written decision?

Subpart F—Assurances for Centers

366.50 What assurances shall a center provide and comply with?
366.60–366.69 [Reserved]

Authority: 29 U.S.C. 796f through 796f–5, unless otherwise noted.

Subpart A—General

§ 366.1 What is the Centers for Independent Living (CIL) program?

The CIL program provides financial assistance for planning, conducting, administering, and evaluating centers for independent living (centers) that comply with the standards and assurances in section 725(b) and (c) of the Act, consistent with the design included in the State plan pursuant to 34 CFR 364.25 for establishing a statewide network of centers.

(Authority: 29 U.S.C. 796f, 796f–1(a)(2), and 796f–2(a)(1)(A)(ii))

§ 366.2 What agencies are eligible for assistance under the CIL program?

(a) In any State in which the Secretary has approved the State plan required by section 704 of the Act, an applicant may receive a grant under Subpart C or D of this part, as applicable, if the applicant demonstrates in its application submitted pursuant to § 366.21, 366.24, 366.33, 366.35, or 366.36 that it—

(1) Has the power and authority to—

(i) Carry out the purpose of Part C of Title VII of the Act and perform the functions listed in section 725(b) and (c) of the Act and Subparts F and G of this part within a community located within that State or in a bordering State; and

(ii) Receive and administer—

(A) Funds under this part;

(B) Funds and contributions from private or public sources that may be used in support of a center; and

(C) Funds from other public and private programs; and

(2) Is able to plan, conduct, administer, and evaluate a center consistent with the standards and assurances in section 725(b) and (c) of the Act and Subparts F and G of this part.

(b) An applicant that meets the requirements of paragraph (a) of this section is eligible to apply as a new center under §§ 366.24 or 366.36 if it—

(1) Is not receiving funds under Part C of Chapter 1 of Title VII of the Act; or

(2) Proposes the expansion of an existing center through the establishment of a separate and complete center (except that the governing board of the existing center may serve as the governing board of the new center) at a different geographical location; and

(3) Meets the requirements of § 366.24;

(c) A State that received assistance in fiscal year (FY) 1993 to directly operate a center in accordance with section 724(a) of the Act is eligible to continue to receive assistance under this part to directly operate that center for FY 1994 or a succeeding fiscal year if, for the fiscal year for which assistance is sought—

(1) No nonprofit private agency submits and obtains approval of an acceptable application under section 722 or 723 of the Act or § 366.21 or § 366.24 to operate a center for that fiscal year before a date specified by the Secretary; or

(2) After funding all applications so submitted and approved, the Secretary determines that funds remain available to provide that assistance.

(d) Except for the requirement that the center be a private nonprofit agency, a center that is operated by a State that receives assistance under paragraph (a), (b), or (c) of this section shall comply with all of the requirements of Part C of Title VII of the Act and the requirements in Subpart C or D, as applicable, and F of this part.

(e) Eligibility requirements for assistance under Subpart B of this part are described in § 366.10.

(Approved by the Office of Management and Budget under control number 1820–0018.)

(Authority: 29 U.S.C. 711(c), 796f–1(b) and (d)(3), 796f–2(b), and 796f–3(a)(2) and (b))

§ 366.3 What activities may the Secretary fund?

(a) An eligible agency may use funds awarded under Subpart B of this part to carry out activities described in § 366.11(b).

(b) An eligible agency may use funds awarded under Subparts C and D of this part to—

(1) Plan, conduct, administer, and evaluate centers that comply with the standards and assurances in section 725(b) and (c) of the Act;

(2) Promote and practice the independent living (IL) philosophy in accordance with Evaluation Standard 1 ("Philosophy");

(3) Provide IL services (including IL core services and, as appropriate, a combination of any other IL services specified in section 7(30)(B) of the Act) to individuals with a range of significant disabilities in accordance with Evaluation Standards 2 and 5 ("Provision of services" and "Independent living core services," respectively);

(4) Facilitate the development and achievement of IL goals selected by individuals with significant disabilities who seek assistance in the development and achievement of IL goals from the center in accordance with Evaluation Standard 3 ("Independent living goals");

(5) Increase the availability and improve the quality of community options for independent living in order to facilitate the development and achievement of IL goals by individuals with significant disabilities in accordance with Evaluation Standard 4 ("Community options");

(6) Increase the capacity of communities within the service area of the center to meet the needs of individuals with significant disabilities in accordance with Evaluation Standard 6 ("Activities to increase community capacity");

(7) Conduct resource development activities to obtain funding from sources other than Chapter 1 of Title VII of the Act in accordance with Evaluation Standard 7 (Resource development activities); and

(8) Conduct activities necessary to comply with the assurances in section 725(c) of the Act, including, but not limited to the following:

(i) Aggressive outreach regarding services provided through the center in an effort to reach populations of individuals with significant disabilities that are unserved or underserved by programs under Title VII of the Act, especially minority groups and urban and rural populations.

(ii) Training for center staff on how to serve unserved and underserved populations, including minority groups and urban and rural populations.

(9) Cross-reference: See § 366.71 in Subpart G.

(Authority: 29 U.S.C. 796f through 796f–4)

§ 366.4 What regulations apply?

The following regulations apply to the CIL program:

(a) The regulations in 34 CFR Part 364.

(b) The regulations in this Part 366.

(Authority: 29 U.S.C. 711(c) and 796f–796f–5)

§ 366.5 How are program funds allotted?

(a) The Secretary allots Federal funds appropriated for FY 1994 and subsequent fiscal years for the CIL program to each State in accordance with the requirements of section 721 of the Act.

(b)(1) After the Secretary makes the reservation required by section 721(b) of the Act, the Secretary makes an allotment, from the remainder of the amount appropriated for a fiscal year to carry out Part C of Title VII of the Act, to each State whose State plan has been approved under section 706 of the Act and 34 CFR Part 364.

(2) The Secretary makes the allotment under paragraph (b)(1) of this section subject to sections 721(c)(1)(B) and (C), 721(c)(2) and (3), and 721(d) of the Act.

(Authority: 29 U.S.C. 796f)

Subpart B—Training and Technical Assistance

§ 366.10 What agencies are eligible for assistance to provide training and technical assistance?

Entities that have experience in the operation of centers are eligible to apply for grants to provide training and technical assistance under section 721(b) of the Act to eligible agencies, centers, and Statewide Independent Living Councils (SILCs).

(Authority: 29 U.S.C. 796f(b)(1))

§ 366.11 What financial assistance does the Secretary provide for training and technical assistance?

(a) From funds, if any, reserved under section 721(b)(1) of the Act to carry out the purposes of this subpart, the Secretary makes grants to, and enters into contracts, cooperative agreements, and other arrangements with, entities that have experience in the operation of centers.

(b) An entity receiving assistance in accordance with paragraph (a) of this section shall provide training and technical assistance to eligible agencies, centers, and SILCs to plan, develop, conduct, administer, and evaluate centers.

(Authority: 29 U.S.C. 796f(b)(1)–(3))

§ 366.12 How does the Secretary make an award?

(a) To be eligible to receive a grant or enter into a contract or other arrangement under section 721(b) of the Act and this subpart, an applicant shall submit an application to the Secretary containing a proposal to provide training and technical assistance to eligible agencies, centers, and SILCs and any additional information at the time and in the manner that the Secretary may require.

(b) The Secretary provides for peer review of grant applications by panels that include persons who are not Federal government employees and who have experience in the operation of centers.

(Approved by the Office of Management and Budget under control number 1820–0018.)

(Authority: 29 U.S.C. 711(c) and 796f(b))

§ 366.13 How does the Secretary determine funding priorities?

In making awards under this section, the Secretary determines funding priorities in accordance with the training and technical assistance needs identified by the survey of SILCs and centers required by section 721(b)(3) of the Act.

(Authority: 29 U.S.C. 796f(b)(3))

§ 366.14 How does the Secretary evaluate an application?

(a) The Secretary evaluates each application for a grant under this subpart on the basis of the criteria in § 366.15.

(b) The Secretary awards up to 100 points for these criteria.

(c) The maximum possible score for each criterion is indicated in parentheses.

(Authority: 29 U.S.C. 796f(b)(3))

§ 366.15 What selection criteria does the Secretary use?

The Secretary uses the following criteria to evaluate applications for new awards for training and technical assistance:

(a) *Meeting the purposes of the program* (30 points). The Secretary reviews each application to determine how well the project will be able to meet the purpose of the program of providing training and technical assistance to eligible agencies, centers,

and SILCs with respect to planning, developing, conducting, administering, and evaluating centers, including consideration of—

(1) The objectives of the project; and

(2) How the objectives further training and technical assistance with respect to planning, developing, conducting, administering, and evaluating centers.

(b) *Extent of need for the project* (20 points). The Secretary reviews each application to determine the extent to which the project meets specific needs recognized in Title VII of the Act, including consideration of—

(1) The needs addressed by the project;

(2) How the applicant identified those needs;

(3) How those needs will be met by the project; and

(4) The benefits to be gained by meeting those needs.

(c) *Plan of operation* (15 points). The Secretary reviews each application for information that shows the quality of the plan of operation for the project, including—

(1) The quality of the design of the project;

(2) The extent to which the plan of management ensures proper and efficient administration of the project;

(3) How well the objectives of the project relate to the purpose of the program;

(4) The quality of the applicant's plan to use its resources and personnel to achieve each objective; and

(5) How the applicant will ensure that project participants who are otherwise eligible to participate are selected without regard to race, color, national origin, gender, age, or disability.

(d) *Quality of key personnel* (7 points).

(1) The Secretary reviews each application for information that shows the qualifications of the key personnel the applicant plans to use on the project, including—

(i) The qualifications of the project director, if one is to be used;

(ii) The qualifications of each of the other management and decision-making personnel to be used in the project;

(iii) The time that each person referred to in paragraphs (d)(1)(i) and (ii) of this section will commit to the project;

(iv) How the applicant, as part of its nondiscriminatory employment practices, will ensure that its personnel are selected for employment without regard to race, color, national origin, gender, age, or disability; and

(v) The extent to which the applicant, as part of its nondiscriminatory employment practices, encourages applications for employment from persons who are members of groups that have been traditionally under-represented, including members of racial or ethnic minority groups, women, persons with disabilities, and elderly individuals.

(2) To determine personnel qualifications under paragraphs (d)(1)(i) and (ii) of this section, the Secretary considers—

(i) Experience and training in fields related to the objectives of the project; and

(ii) Any other qualifications that pertain to the objectives of the project.

(e) *Budget and cost effectiveness* (5 points). The Secretary reviews each application for information that shows the extent to which—

(1) The budget is adequate to support the project; and

(2) Costs are reasonable in relation to the objectives of the project.

(f) *Evaluation plan* (5 points). The Secretary reviews each application to determine the quality of the evaluation plan for the project, including the extent to which the applicant's methods of evaluation—

(1) Are appropriate to the project;

(2) Will determine how successful the project is in meeting its goals and objectives; and

(3) Are objective and produce data that are quantifiable.

(4) Cross-reference: See 34 CFR 75.590.

(g) *Adequacy of resources* (3 points). The Secretary reviews each application to determine the adequacy of the resources that the applicant plans to devote to the project, including facilities, equipment, and supplies.

(h) *Extent of prior experience* (15 points). The Secretary reviews each application to determine the extent of experience the applicant has in the operation of centers and with providing training and technical assistance to centers, including—

(1) Training and technical assistance with planning, developing, and administering centers;

(2) The scope of training and technical assistance provided, including methods used to conduct training and technical assistance for centers;

(3) Knowledge of techniques and approaches for evaluating centers; and

(4) The capacity for providing training and technical assistance as demonstrated by previous experience in these areas.

(Approved by the Office of Management and Budget under control number 1820–0018.)

(Authority: 29 U.S.C. 711(c) and 796f(b))

Subpart C—Grants to Centers for Independent Living (Centers) in States in Which Federal Funding Exceeds State Funding

§ 366.20 When does the Secretary award grants to centers?

The Secretary awards grants to centers in a State in a fiscal year if—

(a) The amount of Federal funds allotted to the State under section 721(c) and (d) of the Act to support the general operation of centers is greater than the amount of State funds earmarked for the same purpose, as determined pursuant to §§ 366.29 and 366.31; or

(b) The Director of a designated State unit (DSU) does not submit to the Secretary and obtain approval of an application to award grants under section 723 of the Act and § 366.32(a) and (b).

(Authority: 29 U.S.C. 796f–1 and 796f–2(a)(2))

§ 366.21 What are the application requirements for existing eligible agencies?

To be eligible for assistance, an eligible agency shall submit—

(a) An application at the time, in the manner, and containing the information that is required;

(b) An assurance that the eligible agency meets the requirements of § 366.2; and

(c) The assurances required by section 725(c) of the Act and Subpart F of this part.

(Approved by the Office of Management and Budget under control number 1820–0018.)

(Authority: 29 U.S.C. 796f–1(b))

§ 366.22 What is the order of priorities?

(a) In accordance with a State's allotment and to the extent funds are available, the order of priorities for allocating funds among centers within a State is as follows:

(1) Existing centers, as described in § 366.23, that comply with the standards and assurances in section 725(b) and (c) of the Act and Subparts F and G of this part first receive the level of funding each center received in the previous year. However, any funds received by an existing center to establish a new center at a different geographical location pursuant to proposed § 366.2(b)(2) are not included in determining the level of funding to the existing center in any fiscal year that the new center applies for and receives funds as a separate center.

(2) Existing centers that meet the requirements of paragraph (a)(1) of this section then receive a cost-of-living increase in accordance with procedures consistent with section 721(c)(3) of the Act.

(3) New centers, as described in §366.2(b), that comply with the standards and assurances in section 725(b) and (c) of the Act and Subparts F and G of this part.

(b) If, after meeting the priorities in paragraphs (a)(1) and (2) of this section, there are insufficient funds under the State's allotment under section 721(c) and (d) of the Act to fund a new center under paragraph (a)(3) of this section, the Secretary may—

(1) Use the excess funds in the State to assist existing centers consistent with the State plan; or

(2) Reallot these funds in accordance with section 721(d) of the Act.

(Approved by the Office of Management and Budget under control number 1820–0018.)

(Authority: 29 U.S.C. 711(c) and 796f–1(e))

§366.23 What grants must be made to existing eligible agencies?

(a) In accordance with the order of priorities established in §366.22, an eligible agency may receive a grant if the eligible agency demonstrates in its application that it—

(1) Meets the requirements in §366.21 or §366.24;

(2) Is receiving funds under Part C of Title VII of the Act on September 30, 1993; and

(3) Is in compliance with the program and fiscal standards and assurances in section 725(b) and (c) of the Act and Subparts F and G of this part. (The indicators of minimum compliance in Subpart G of this part are used to determine compliance with the evaluation standards in section 725(b) of the Act.)

(b) For purposes of this section, an eligible agency is receiving funds under Part C of Title VII of the Act on September 30, 1993, if it was awarded a grant on or before that date, i.e., during FY 1993.

(Approved by the Office of Management and Budget under control number 1820–0018.)

(Authority: 29 U.S.C. 796f–1(c))

§366.24 How is an award made to a new center?

(a) To apply for a grant as a new center, an eligible agency shall—

(1) Meet the requirements of §366.2(b);

(2) Submit an application that meets the requirements of §366.21; and

(3) Meet the requirements of this section.

(b) Subject to the order of priorities established in §366.22, a grant for a new center may be awarded to the most qualified eligible agency that applies for funds under this section, if—

(1)(i) No center serves a geographic area of a State; or

(ii) A geographic area of a State is underserved by centers serving other areas of the State;

(2) The eligible agency proposes to serve the geographic area that is unserved or underserved in the State; and

(3) The increase in the allotment of the State under section 721 of the Act for a fiscal year, as compared with the immediately preceding fiscal year, is sufficient to support an additional center in the State.

(c) The establishment of a new center under this subpart must be consistent with the design included in the State plan pursuant to 34 CFR 364.25 for establishing a statewide network of centers.

(d) An applicant may satisfy the requirements of paragraph (c) of this section by submitting appropriate documentation demonstrating that the establishment of a new center is consistent with the design in the State plan required by 34 CFR 364.25.

(Approved by the Office of Management and Budget under control number 1820–0018.)

(Authority: 29 U.S.C. 796f–1(d))

§366.25 What additional factor does the Secretary use in making a grant for a new center under §366.24?

In selecting from among applicants for a grant under §366.24 for a new center, the Secretary considers comments regarding the application, if any, by the SILC in the State in which the applicant is located.

(Approved by the Office of Management and Budget under control number 1820–0018.)

(Authority: 29 U.S.C. 796f–1(d)(1))

§366.26 How does the Secretary evaluate an application?

(a) The Secretary evaluates each application for a grant under this subpart on the basis of the criteria in §366.27.

(b) The Secretary awards up to 100 points for these criteria.

(c) The maximum possible score for each criterion is indicated in parentheses.

(Authority: 29 U.S.C. 796f(b)(3))

§366.27 What selection criteria does the Secretary use?

In evaluating each application for a new center under this part, the Secretary uses the following selection criteria:

(a) *Extent of the need for the project* (20 points).

(1) The Secretary reviews each application for persuasive evidence that shows the extent to which the project meets the specific needs for the program, including considerations of—

(i) The needs addressed by the project;

(ii) How the applicant identified those needs (e.g., whether from the 1990 census data or other current sources);

(iii) How those needs will be met by the project; and

(iv) The benefits to be gained by meeting those needs.

(2) The Secretary looks for information that shows that the need for the center has been established based on an assessment of the ability of existing programs and facilities to meet the need for IL services of individuals with significant disabilities in the geographic area to be served.

(3) The Secretary looks for information that shows—

(i) That the applicant proposes to establish a new center to serve a priority service area that is identified in the current State plan; and

(ii) The priority that the State has placed on establishing a new center in this proposed service area.

(b) *Past performance* (5 points). The Secretary reviews each application for information that shows the past performance of the applicant in successfully providing services comparable to the IL core services and other IL services listed in section 7 (29) and (30) of the Act and 34 CFR 365.21 and 365.22 and other services that empower individuals with significant disabilities.

(c) *Meeting the standards and the assurances* (25 points). The Secretary reviews each application for information that shows—

(1) Evidence of demonstrated success in satisfying, or a clearly defined plan to satisfy, the standards in section 725(b) of the Act and Subpart G of this part; and

(2) Convincing evidence of demonstrated success in satisfying, or a clearly defined plan to satisfy, the assurances in section 725(c) of the Act and Subpart F of this part.

(d) *Quality of key personnel* (10 points).

(1) The Secretary reviews each application for information that shows the qualifications of the key personnel the applicant plans to use on the project, including—

(i) The qualifications of the project director, if one is to be used;

(ii) The qualifications of each of the other management and decision-making personnel to be used in the project;

(iii) The time that each person referred to in paragraphs (d)(1) (i) and (ii) of this section will commit to the project;

(iv) How the applicant, as part of its nondiscriminatory employment

practices, will ensure that its personnel are selected for employment without regard to race, color, national origin, gender, age, or disability; and

(v) The extent to which the applicant, as part of its nondiscriminatory employment practices, encourages applications for employment from persons who are members of groups that have been traditionally under-represented, including—

(A) Members of racial or ethnic minority groups;

(B) Women;

(C) Persons with disabilities; and

(D) Elderly individuals.

(2) To determine personnel qualifications under paragraphs (d)(1) (i) and (ii) of this section, the Secretary considers—

(i) Experience and training in fields related to the objectives of the project; and

(ii) Any other qualifications that pertain to the objectives of the project.

(e) *Budget and cost effectiveness* (10 points). The Secretary reviews each application for information that shows the extent to which—

(1) The budget is adequate to support the project; and

(2) Costs are reasonable in relation to the objectives of the project.

(f) *Evaluation plan* (5 points). The Secretary reviews each application for information that shows the quality of the evaluation plan for the project, including the extent to which the applicant's methods of evaluation—

(1) Are appropriate for the project;

(2) Will determine how successful the project is in meeting its goals and objectives; and

(3) Are objective and produce data that are quantifiable.

(4) (Cross-reference: See 34 CFR 75.590.)

(g) *Plan of operation* (20 points). The Secretary reviews each application for information that shows the quality of the plan of operation for the project, including—

(1) The quality of the design of the project;

(2) The extent to which the plan of management ensures proper and efficient administration of the project;

(3) How well the objectives of the project relate to the purpose of the program;

(4) The quality and adequacy of the applicant's plan to use its resources (including funding, facilities, equipment, and supplies) and personnel to achieve each objective;

(5) How the applicant will ensure that project participants who are otherwise eligible to participate are selected without regard to race, color, national origin, gender, age, or disability; and

(6) A clear description of how the applicant will provide equal access to services for eligible project participants who are members of groups that have been traditionally under-represented, including—

(i) Members of racial or ethnic minority groups;

(ii) Women;

(iii) Elderly individuals; and

(iv) Children and youth.

(h) *Involvement of individuals with significant disabilities* (5 points).

(1) The Secretary reviews each application for information that shows that individuals with significant disabilities are appropriately involved in the development of the application.

(2) The Secretary looks for information that shows that individuals with significant disabilities or their parents, guardians, or other legally authorized advocates or representatives, as appropriate, will be substantially involved in planning, policy direction, and management of the center, and, to the greatest extent possible, that individuals with significant disabilities will be employed by the center.

(Approved by the Office of Management and Budget under control number 1820–0018.)

(Authority: 29 U.S.C. 796f–1(d)(2)(B))

§ 366.28 Under what circumstances may the Secretary award a grant to a center in one State to serve individuals in another State?

(a) The Secretary may use funds from the allotment of one State to award a grant to a center located in a bordering State if the Secretary determines that the proposal of the out-of-State center to serve individuals with significant disabilities who reside in the bordering State is consistent with the State plan of the State in which these individuals reside.

(b) An applicant shall submit documentation demonstrating that the arrangements described in paragraph (a) of this section are consistent with the State plan of the State in which the individuals reside.

(Approved by the Office of Management and Budget under control number 1820–0018.)

(Authority: 29 U.S.C. 711(c) and 796f (c) and (d))

Subpart D—Grants to Centers in States in Which State Funding Equals or Exceeds Federal Funding

Determining Whether State Funding Equals or Exceeds Federal Funding

§ 366.29 When may the Director of the designated State unit (DSU) award grants to centers?

(a) The Director of the DSU (Director) may award grants under section 723 of the Act and this subpart to centers located within the State or in a bordering State in a fiscal year if—

(1) The Director submits to the Secretary and obtains approval of an application to award grants for that fiscal year under section 723 of the Act and § 366.32 (a) and (b); and

(2) The Secretary determines that the amount of State funds that were earmarked by the State to support the general operation of centers meeting the requirements of Part C of Chapter 1 of Title VII of the Act in the second fiscal year preceding the fiscal year for which the application is submitted equaled or exceeded the amount of funds allotted to the State under section 721 (c) and (d) of the Act (or Part B of Title VII of the Act as in effect on October 28, 1992) for that preceding fiscal year.

(b) For purposes of section 723(a)(1)(A)(iii) of the Act and this subpart, the second fiscal year preceding the fiscal year for which the State submits an application to administer the CIL program is considered the "preceding fiscal year." *Example:* If FY 1995 is the fiscal year for which the State submits an application to administer the CIL program under this subpart, FY 1993 is the "preceding fiscal year." In determining the "preceding fiscal year" under this subpart, the Secretary makes any adjustments necessary to accommodate a State's multi-year funding cycle or fiscal year that does not coincide with the Federal fiscal year.

(Approved by the Office of Management and Budget under control number 1820–0018.)

(Authority: 29 U.S.C. 796f–2(a)(3))

§ 366.30 What are earmarked funds?

(a) For purposes of this subpart, the amount of State funds that were earmarked by a State to support the general operation of centers does not include—

(1) Federal funds used for the general operation of centers;

(2) State funds used to purchase specific services from a center, including State funds used for grants or contracts to procure or purchase personal assistance services or particular types of skills training;

(3) State attendant care funds; or

(4) Social Security Administration reimbursement funds.

(b) For purposes of this subpart, "earmarked funds" means funds appropriated by the State and expressly or clearly identified as State expenditures in the relevant fiscal year for the sole purpose of funding the general operation of centers.

(Authority: 29 U.S.C. 711(c) and 796f–2(a)(1)(A))

§ 366.31 What happens if the amount of earmarked funds does not equal or exceed the amount of Federal funds for a preceding fiscal year?

If the State submits an application to administer the CIL program under section 723 of the Act and this subpart for a fiscal year, but did not earmark the amount of State funds required by § 366.29(a)(2) in the preceding fiscal year, the State shall be ineligible to make grants under section 723 of the Act and this subpart after the end of the fiscal year succeeding the preceding fiscal year and for each succeeding fiscal year.

Example: A State meets the earmarking requirement in FY 1994. It also meets this requirement in FY 1995. However, in reviewing the State's application to administer the CIL program in FY 1998, the Secretary determines that the State failed to meet the earmarking requirement in FY 1996. The State may continue to award grants in FY 1997 but may not do so in FY 1998 and succeeding fiscal years.

(Authority: 29 U.S.C. 796f–2(a)(1)(B))

Awarding Grants

§ 366.32 Under what circumstances may the DSU make grants?

(a) To be eligible to award grants under this subpart and to carry out section 723 of the Act for a fiscal year, the Director must submit to the Secretary for approval an application at the time and in the manner that the Secretary may require and that includes, at a minimum—

(1) Information demonstrating that the amount of funds earmarked by the State for the general operation of centers meets the requirements in § 366.29(a)(1); and

(2) A summary of the annual performance reports submitted to the Director from centers in accordance with § 366.50(n).

(b) If the amount of funds earmarked by the State for the general operation of centers meets the requirements in § 366.29(a)(1), the Secretary approves the application and designates the Director to award the grants and carry out section 723 of the Act.

(c) If the Secretary designates the Director to award grants and carry out section 723 of the Act under paragraph (b) of this section, the Director makes grants to eligible agencies in a State, as described in § 366.2, for a fiscal year from the amount of funds allotted to the State under section 721(c) and (d) of the Act.

(d) (1) In the case of a State in which there is both a DSU responsible for providing IL services to the general population and a DSU responsible for providing IL services for individuals who are blind, for purposes of Subparts D and E of this part, the "Director" shall be the Director of the general DSU.

(2) The State units described in paragraph (d)(1) of this section shall periodically consult with each other with respect to the provision of services for individuals who are blind.

(e) The Director may enter into assistance contracts with centers to carry out section 723 of the Act. For purposes of this paragraph, an assistance contract is an instrument whose principal purpose is to transfer funds allotted to the State under section 721 (c) and (d) of the Act and this part to an eligible agency to carry out section 723 of the Act. Under an assistance contract, the DSU shall assume a role consistent with that of the Secretary under section 722 of the Act. If the DSU uses an assistance contract to award funds under section 723 of the Act, the DSU may not add any requirements, terms, or conditions to the assistance contract other than those that would be permitted if the assistance contract were a grant rather than an assistance contract. Under an assistance contract, as defined in this paragraph, the role of the DSU is to ensure that the terms of the assistance contract, which are established by Chapter 1 of Title VII of the Act and the implementing regulations in this part and 34 CFR Part 364, are satisfied.

(f) The Director may not enter into procurement contracts with centers to carry out section 723 of the Act. For purposes of this paragraph, a procurement contract is an instrument whose principal purpose is to acquire (by purchase, lease, or barter) property or services for the direct benefit or use of the DSU. Under a procurement contract, the DSU prescribes the specific services it intends to procure and the terms and conditions of the procurement.

(g) In the enforcement of any breach of the terms and conditions of an assistance contract, the DSU shall follow the procedures established in §§ 366.40 through 366.45.

(Approved by the Office of Management and Budget under control number 1820–0018.)

(Authority: 29 U.S.C. 711(c) and 796f–2(a)(2))

§ 366.33 What are the application requirements for existing eligible agencies?

To be eligible for assistance under this subpart, an eligible agency shall comply with the requirements in § 366.21.

(Approved by the Office of Management and Budget under control number 1820–0018.)

(Authority: 29 U.S.C. 796f–2(b))

§ 366.34 What is the order of priorities?

(a) Unless the Director and the chairperson of the SILC, or other individual designated by the SILC to act on behalf of and at the direction of the SILC, jointly agree on another order of priorities, the Director shall follow the order of priorities in § 366.22 for allocating funds among centers within a State, to the extent funds are available.

(b) If the order of priorities in § 366.22 is followed and, after meeting the priorities in § 366.22(a) (1) and (2), there are insufficient funds under the State's allotment under section 721(c) and (d) of the Act to fund a new center under § 366.22(a)(3), the Director may—

(1) Use the excess funds in the State to assist existing centers consistent with the State plan; or

(2) Return these funds to the Secretary for reallotment in accordance with section 721(d) of the Act.

(Authority: 29 U.S.C. 711(c) and 796f–2(e))

§ 366.35 What grants must be made to existing eligible agencies?

In accordance with the order of priorities established in § 366.34(a), an eligible agency may receive a grant under this subpart if the eligible agency meets the applicable requirements in §§ 366.2, 366.21, and 366.23.

(Authority: 29 U.S.C. 796f–2(c))

§ 366.36 How is an award made to a new center?

To be eligible for a grant as a new center under this subpart, an eligible agency shall meet the requirements for a new center in §§ 366.2(b) and 366.24, except that the award of a grant to a new center under this section is subject to the order of priorities in § 366.34(a).

(Authority: 29 U.S.C. 796f–2(d))

§ 366.37 What procedures does the Director of the DSU (Director) use in making a grant for a new center?

(a) In selecting from among applicants for a grant for a new center under § 366.24 of this subpart—

(1) The Director and the chairperson of the SILC, or other individual designated by the SILC to act on behalf of and at the direction of the SILC, shall jointly appoint a peer review committee that shall rank applications in accordance with the standards and assurances in section 725 (b) and (c) of the Act and Subparts F and G of this part and any criteria jointly established by the Director and the chairperson or other designated individual;

(2) The peer review committee shall consider the ability of each applicant to operate a center and shall recommend an applicant to receive a grant under this subpart, based on either the

selection criteria in § 366.27 or the following:

(i) Evidence of the need for a center, consistent with the State plan.

(ii) Any past performance of the applicant in providing services comparable to IL services.

(iii) The plan for complying with, or demonstrated success in complying with, the standards and the assurances in section 725 (b) and (c) of the Act and Subparts F and G of this part.

(iv) The quality of key personnel of the applicant and the involvement of individuals with significant disabilities by the applicant.

(v) The budget and cost-effectiveness of the applicant.

(vi) The evaluation plan of the applicant.

(vii) The ability of the applicant to carry out the plans identified in paragraphs (a)(2) (iii) and (vi) of this section.

(b) The Director shall award the grant on the basis of the recommendations of the peer review committee if the actions of the committee are consistent with Federal and State law.

(Approved by the Office of Management and Budget under control number 1820–0018.)

(Authority: 29 U.S.C. 796f–2(d)(2))

§ 366.38 What are the procedures for review of centers?

(a) The Director shall, in accordance with section 723(g)(1) and (h) of the Act, periodically review each center receiving funds under section 723 of the Act to determine whether the center is in compliance with the standards and assurances in section 725 (b) and (c) of the Act and Subparts F and G of this part.

(b) The periodic reviews of centers required by paragraph (a) of this section must include annual on-site compliance reviews of at least 15 percent of the centers assisted under section 723 of the Act in that State in each year.

(c) Each team that conducts an on-site compliance review of a center shall include at least one person who is not an employee of the designated State agency, who has experience in the operation of centers, and who is jointly selected by the Director and the chairperson of the SILC, or other individual designated by the SILC to act on behalf of and at the direction of the SILC.

(d) A copy of each review under this section shall be provided to the Secretary and the SILC.

(Approved by the Office of Management and Budget under control number 1820–0018.)

(Authority: 29 U.S.C. 711(c) and 796f–2(g)(1) and (h))

Subpart E—Enforcement and Appeals Procedures

§ 366.39 What procedures does the Secretary use for enforcement?

(a) If the Secretary determines that any center receiving funds under this part is not in compliance with the standards and assurances in section 725 (b) and (c) of the Act and Subparts F and G of this part, the Secretary immediately notifies the center, by certified mail, return receipt requested, or other means that provide proof of receipt, that the center is out of compliance. The Secretary also offers technical assistance to the center to develop a corrective action plan to comply with the standards and assurances.

(b) The Secretary terminates all funds under section 721 of the Act to that center 90 days after the date of the notification required by paragraph (a) of this section unless—

(1) The center submits, within 90 days after receiving the notification required by paragraph (a) of this section, a corrective action plan to achieve compliance that is approved by the Secretary; or

(2) The center requests a hearing pursuant to paragraph (c) or (d) of this section.

(c) If the Secretary does not approve a center's corrective action plan submitted pursuant to paragraph (b)(1) of this section, the center has 30 days from receipt of the Secretary's written notice of disapproval of the center's corrective action plan to request a hearing by submitting a formal written request that gives the reasons why the center believes that the Secretary should have approved the center's corrective action plan.

(d) If the center does not submit a corrective action plan to the Secretary, the center has 90 days after receiving the notification required by paragraph (a) of this section to request a hearing by submitting a formal written request that gives the reasons why the center believes that the Secretary should have found the center in compliance with the standards and assurances in section 725 (b) and (c) of the Act and Subparts F and G of this part.

(e) The date of filing a formal written request for a hearing to the Secretary under paragraph (c) or (d) of this section is determined in a manner consistent with the requirements of 34 CFR 81.12.

(f) The Secretary issues a written decision to terminate funds to the center if, after providing reasonable notice and an opportunity for a hearing, the Secretary finds that—

(1) The center receiving funds under this part is not in compliance with the standards and assurances in section 725 (b) and (c) of the Act and Subparts F and G of this part; or

(2) The center's corrective action plan submitted under paragraph (b)(1) of this section cannot be approved.

(g) The Secretary's decision to terminate funds to a center pursuant to paragraph (f) of this section takes effect upon issuance.

(Approved by the Office of Management and Budget under control number 1820–0018.)

(Authority: 29 U.S.C. 711(c) and 796f–1(g))

§ 366.40 How does the Director initiate enforcement procedures?

(a) If the Director determines that any center receiving funds under this part is not in compliance with the standards and assurances in section 725 (b) and (c) of the Act and Subparts F and G of this part, the Director shall immediately provide the center, by certified mail, return receipt requested, or other means that provide proof of receipt, with an initial written notice that the center is out of compliance with the standards and assurances and that the Director will terminate the center's funds or take other proposed significant adverse action against the center 90 days after the center's receipt of this initial written notice. The Director shall provide technical assistance to the center to develop a corrective action plan to comply with the standards and assurances.

(b) Unless the center submits, within 90 days after receiving the notification required by paragraph (a) of this section, a corrective action plan to achieve compliance that is approved by the Director or, if appealed, by the Secretary, the Director shall terminate all funds under section 723 of the Act to a center 90 days after the later of—

(1) The date that the center receives the initial written notice required by paragraph (a) of this section; or

(2) The date that the center receives the Secretary's final decision issued pursuant to § 366.46(c) if—

(i) The center files a formal written appeal of the Director's final written decision pursuant to § 366.44(a); or

(ii) The center files a formal written appeal of the decision described in the Director's initial written notice pursuant to § 366.44(b).

(Approved by the Office of Management and Budget under control number 1820–0018.)

(Authority: 29 U.S.C. 711(c) and 796f–2(g) and (i))

§ 366.41 What must be included in an initial written notice from the Director?

The initial written notice required by § 366.40(a) must—

(a) Include, at a minimum, the following:

(1) The name of the center.

(2) The reason or reasons for proposing the termination of funds or other significant adverse action against the center, including any evidence that the center has failed to comply with any of the evaluation standards or assurances in section 725(b) and (c) of the Act and Subparts F and G of this part.

(3) The effective date of the proposed termination of funds or other significant adverse action against the center;

(b) Be given 90 days in advance of the date the Director intends to terminate a center's funds or take any other significant adverse action against the center;

(c) Inform the center that it has 90 days from the date the center receives the notice to submit a corrective action plan;

(d) Inform the center that it may seek mediation and conciliation in accordance with § 366.40(a) to resolve any dispute with the Director within the 90 days before the proposed termination of funds or other significant adverse action against the center; and

(e) Inform the center that, if mediation and conciliation are not successful and the Director does not issue a final written decision pursuant to § 366.42, the center may appeal to the Secretary the decision described in the Director's initial written notice on or after the 90th day, but not later than the 120th day, after the center receives the Director's initial decision.

(Approved by the Office of Management and Budget under control number 1820–0018.)

(Authority: 29 U.S.C. 711(c) and 796f–2 (g) and (i))

§ 366.42 When does a Director issue a final written decision?

(a) If the center submits a corrective action plan in accordance with § 366.40(b), the Director shall provide to the center, not later than the 120th day after the center receives the Director's initial written notice, a final written decision approving or disapproving the center's corrective action plan and informing the center, if appropriate, of the termination of the center's funds or any other proposed significant adverse action against the center.

(b) The Director shall send the final written decision to the center by registered or certified mail, return receipt requested, or other means that provide a record that the center received the Director's final written decision.

(c) A Director's final written decision to terminate funds or take any other adverse action against a center may not take effect until 30 days after the date that the center receives it.

(d) If a center appeals pursuant to § 366.44(a), the Director's final written decision to terminate funds or take any other adverse action against a center does not take effect until the Secretary issues a final decision.

(Approved by the Office of Management and Budget under control number 1820–0018.)

(Authority: 29 U.S.C. 711(c) and 796f–2 (g) and (i))

§ 366.43 What must be included in the Director's final written decision?

The Director's final written decision to disapprove a center's corrective action plan required by § 366.42 must—

(a) Address any response from the center to the Director's initial written notice to terminate funds or take other significant adverse action against the center;

(b) Include a statement of the reasons why the Director could not approve the corrective action plan; and

(c) Inform the center of its right to appeal to the Secretary the Director's final written decision to terminate funds or take any other significant adverse action against the center.

(Approved by the Office of Management and Budget under control number 1820–0018.)

(Authority: 29 U.S.C. 711(c) and 796f–2 (g) and (i))

§ 366.44 How does a center appeal a decision included in a Director's initial written notice or a Director's final written decision?

(a) To obtain the Secretary's review of a Director's final written decision to disapprove a center's corrective action plan submitted pursuant to § 366.40(b), the center shall file, within 30 days from receipt of the Director's final written decision, a formal written appeal with the Secretary giving the reasons why the center believes that the Director should have approved the center's corrective action plan. (Cross-reference: See § 366.42.)

(b) To obtain the Secretary's review of a decision described in a Director's initial written notice, a center that does not submit a corrective action plan to a Director shall file, in accordance with paragraph (c)(1)(i) of this section, a formal written appeal with the Secretary giving the reasons why the center believes that the Director should have found the center in compliance with the standards and assurances in section 725 (b) and (c) of the Act and Subparts F and G of this part.

(c) To appeal to the Secretary a decision described in a Director's initial written notice or a Director's final written decision to disapprove a center's corrective action plan and to terminate or take other significant adverse action, a center shall file with the Secretary—

(1) A formal written appeal—

(i) On or after the 90th day but not later than the 120th day following a center's receipt of a Director's initial written notice; or

(ii) On or before the 30th day after a center's receipt of the Director's final written decision to disapprove a center's corrective action plan and to terminate or take other significant adverse action;

(2) A copy of the corrective action plan, if any, submitted to the Director; and

(3) One copy each of any other written submissions sent to the Director in response to the Director's initial written notice to terminate funds or take other significant adverse action against the center.

(d) The date of filing a formal written appeal to the Secretary under paragraph (c) of this section is determined in a manner consistent with the requirements of 34 CFR 81.12.

(e) If the center files a formal written appeal with the Secretary, the center shall send a separate copy of this appeal to the Director by registered or certified mail, return receipt requested, or other means that provide a record that the Director received a separate copy of the center's written appeal.

(f) The center's formal written appeal to the Secretary must state why—

(1) The Director has not met the burden of showing that the center is not in compliance with the standards and assurances in section 725 (b) and (c) of the Act and in Subparts F and G of this part;

(2) The corrective action plan, if any, should have been approved; or

(3) The Director has not met the procedural requirements of §§ 366.40 through 366.45.

(g) As part of its submissions under this section, the center may request an informal meeting with the Secretary at which representatives of both parties will have an opportunity to present their views on the issues raised in the appeal.

(h) A Director's decision to terminate funds that is described in an initial written notice or final written decision is stayed as of the date (determined pursuant to paragraph (d) of this section) that the center files a formal written appeal with the Secretary.

(Approved by the Office of Management and Budget under control number 1820–0018.)

(Authority: 29 U.S.C. 711(c) and 796f–2(g)(2) and (i))

§ 366.45 What must a Director do upon receipt of a copy of a center's formal written appeal to the Secretary?

(a) If the center files a formal written appeal in accordance with § 366.44(c), the Director shall, within 15 days of receipt of the center's appeal, submit to the Secretary one copy each of the following:

(1) The Director's initial written notice to terminate funds or take any other significant adverse action against the center sent to the center.

(2) The Director's final written decision, if any, to disapprove the center's corrective action plan and to terminate the center's funds or take any other significant adverse action against the center.

(3) Any other written documentation or submissions the Director wishes the Secretary to consider.

(4) Any other information requested by the Secretary.

(b) As part of its submissions under this section, the Director may request an informal meeting with the Secretary at which representatives of both parties will have an opportunity to present their views on the issues raised in the appeal.

(Approved by the Office of Management and Budget under control number 1820–0018.)

(Authority: 29 U.S.C. 711(c) and 796f–2(g)(2) and (i))

§ 366.46 How does the Secretary review a center's appeal of a decision included in a Director's initial written notice or a Director's final written decision?

(a) If either party requests a meeting under §§ 366.44(g) or 366.45(b), the meeting is to be held within 30 days of the date of the Secretary's receipt of the submissions from the Director that are required by § 366.45(a). The Secretary promptly notifies the parties of the date and place of the meeting.

(b) Within 30 days of the informal meeting permitted under paragraph (a) of this section or, if neither party has requested an informal meeting, within 60 days of the date of receipt of the submissions required from the Director by § 366.45(a), the Secretary issues to the parties the Secretary's decision.

(c) The Secretary reviews a decision included in a Director's initial written notice or a Director's final written decision to disapprove the center's corrective action plan and to terminate the center's funds or take any other significant adverse action against the center based on the record submitted under §§ 366.44 and 366.45 and may affirm or, if the Secretary finds that the decision included in a Director's initial written notice or a Director's final written decision is not supported by the evidence or is not in accordance with the law, may—

(1) Remand the appeal for further findings; or

(2) Reverse the decision described in the Director's initial written notice or the Director's final written decision to disapprove the center's corrective action plan and to terminate funds or take any other significant adverse action against the center.

(d) The Secretary sends copies of his or her decision to the parties by registered or certified mail, return receipt requested, or other means that provide a record of receipt by both parties.

(e) If the Secretary affirms the decision described in a Director's initial written notice or the Director's final written decision, the Director's decision takes effect on the date of the Secretary's final decision to affirm.

(Authority: 29 U.S.C. 711(c) and 796f–2(g)(2) and (i))

Subpart F—Assurances for Centers

§ 366.50 What assurances shall a center provide and comply with?

To be eligible for assistance under this part, an eligible agency shall provide satisfactory assurances that—

(a) The applicant is an eligible agency;

(b) The center will be designed and operated within local communities by individuals with disabilities, including an assurance that the center will have a board that is the principal governing body of the center and a majority of which must be composed of individuals with significant disabilities;

(c) The applicant will comply with the standards in Subpart G;

(d) The applicant will establish clear priorities through—

(1) Annual and three-year program and financial planning objectives for the center, including overall goals or a mission for the center;

(2) A work plan for achieving the goals or mission, specific objectives, service priorities, and types of services to be provided; and

(3) A description that demonstrates how the proposed activities of the applicant are consistent with the most recent three-year State plan under section 704 of the Act;

(e) The applicant will use sound organizational and personnel assignment practices, including taking affirmative action to employ and advance in employment qualified individuals with significant disabilities on the same terms and conditions required with respect to the employment of individuals with disabilities under section 503 of the Act;

(f) The applicant will ensure that the majority of the staff, and individuals in decision-making positions, of the applicant are individuals with disabilities;

(g) The applicant will practice sound fiscal management, including making arrangements for an annual independent fiscal audit;

(h) The applicant will conduct an annual self-evaluation, prepare an annual performance report, and maintain records adequate to measure performance with respect to the standards in Subpart G;

(i) The annual performance report and the records of the center's performance required by paragraph (h) of this section must each contain information regarding, at a minimum—

(1) The extent to which the center is in compliance with the standards in section 725(b) of the Act and Subpart G of this part (Cross-reference: See §§ 366.70(a)(2) and 366.73);

(2) The number and types of individuals with significant disabilities receiving services through the center;

(3) The types of services provided through the center and the number of individuals with significant disabilities receiving each type of service;

(4) The sources and amounts of funding for the operation of the center;

(5) The number of individuals with significant disabilities who are employed by, and the number who are in management and decision-making positions in, the center;

(6) The number of individuals from minority populations who are employed by, and the number who are in management and decision-making positions in, the center; and

(7) A comparison, if appropriate, of the activities of the center in prior years with the activities of the center in most recent years;

(j) Individuals with significant disabilities who are seeking or receiving services at the center will be notified by the center of the existence of, the availability of, and how to contact the client assistance program;

(k) Aggressive outreach regarding services provided through the center will be conducted in an effort to reach populations of individuals with significant disabilities that are unserved or underserved by programs under Title VII of the Act, especially minority groups and urban and rural populations;

(l) Staff at centers will receive training on how to serve unserved and underserved populations, including minority groups and urban and rural populations;

(m) The center will submit to the SILC a copy of its approved grant application

and the annual performance report required under paragraph (h) of this section;

(n) The center will prepare and submit to the DSU, if the center received a grant from the Director, or to the Secretary, if the center received a grant from the Secretary, within 90 days of the end of each fiscal year, the annual performance report that is required to be prepared pursuant to paragraph (h) of this section and that contains the information described in paragraph (i) of this section; and

(o) An IL plan as described in section 704(e) of the Act will be developed for each individual who will receive services under this part unless the individual signs a waiver stating that an IL plan is unnecessary.

(Approved by the Office of Management and Budget under control number 1820-0018.)

(Authority: 29 U.S.C. 796f-4)

PART 367—INDEPENDENT LIVING SERVICES FOR OLDER INDIVIDUALS WHO ARE BLIND

Subpart A—General

Sec.
367.1 What is the Independent Living Services for Older Individuals Who Are Blind program?
367.2 Who is eligible for an award?
367.3 What activities may the Secretary fund?
367.4 What regulations apply?
367.5 What definitions apply?

Subpart B—What Are the Application Requirements?

367.10 How does a designated State agency (DSA) apply for an award?
367.11 What assurances must a DSA include in its application?

Subpart C—How Does the Secretary Award Discretionary Grants on a Competitive Basis?

367.20 Under what circumstances does the Secretary award discretionary grants on a competitive basis to States?
367.21 How does the Secretary evaluate an application for a discretionary grant?
367.22 What selection criteria does the Secretary use?
367.23 What additional factor does the Secretary consider?

Subpart D—How Does the Secretary Award Contingent Formula Grants?

367.30 Under what circumstances does the Secretary award contingent formula grants to States?
367.31 How are allotments made?
367.32 How does the Secretary reallot funds under section 752(j)(4) of the Act?

Subpart E—What Conditions Must Be Met After an Award?

367.40 What matching requirements apply?
367.41 When may a DSA award grants or contracts?
367.42 When does the Secretary award noncompetitive continuation grants?

Authority: 29 U.S.C. 796k, unless otherwise noted.

Subpart A—General

§ 367.1 What is the Independent Living Services for Older Individuals Who Are Blind program?

This program supports projects that—

(a) Provide any of the independent living (IL) services to older individuals who are blind that are described in § 367.3(b);

(b) Conduct activities that will improve or expand services for these individuals; and

(c) Conduct activities to help improve public understanding of the problems of these individuals.

(Authority: 29 U.S.C. 796k(a) and (b))

§ 367.2 Who is eligible for an award?

Any designated State agency (DSA) is eligible for an award under this program if the DSA—

(a) Is authorized to provide rehabilitation services to individuals who are blind; and

(b) Submits to and obtains approval from the Secretary of an application that meets the requirements of section 752(i) of the Act and §§ 367.10 and 367.11.

(Authority: 29 U.S.C. 796k(a)(2))

§ 367.3 What activities may the Secretary fund?

(a) The DSA may use funds awarded under this part for the activities described in § 367.1 and paragraph (b) of this section.

(b) For purposes of § 367.1(a), IL services for older individuals who are blind include—

(1) Services to help correct blindness, such as—

(i) Outreach services;

(ii) Visual screening;

(iii) Surgical or therapeutic treatment to prevent, correct, or modify disabling eye conditions; and

(iv) Hospitalization related to these services;

(2) The provision of eyeglasses and other visual aids;

(3) The provision of services and equipment to assist an older individual who is blind to become more mobile and more self-sufficient;

(4) Mobility training, Braille instruction, and other services and equipment to help an older individual who is blind adjust to blindness;

(5) Guide services, reader services, and transportation;

(6) Any other appropriate service designed to assist an older individual who is blind in coping with daily living activities, including supportive services and rehabilitation teaching services;

(7) IL skills training, information and referral services, peer counseling, and individual advocacy training; and

(8) Other IL services, as defined in section 7(30) of the Act and as listed in 34 CFR 365.22.

(Authority: 29 U.S.C. 796k (d) and (e))

§ 367.4 What regulations apply?

The following regulations apply to the Independent Living Services for Older Individuals Who Are Blind program:

(a) The Education Department General Administrative Regulations (EDGAR) as follows:

(1) 34 CFR Part 74 (Administration of Grants to Institutions of Higher Education, Hospitals, and Nonprofit Organizations), with respect to subgrants to an entity that is not a State or local government or Indian tribal organization.

(2) 34 CFR Part 75 (Direct Grant Programs), with respect to grants under Subpart C.

(3) 34 CFR Part 76 (State-Administered Programs), with respect to grants under Subpart D.

(4) 34 CFR Part 77 (Definitions That Apply to Department Regulations).

(5) 34 CFR Part 79 (Intergovernmental Review of Department of Education Programs and Activities).

(6) 34 CFR Part 80 (Uniform Administrative Requirements for Grants and Cooperative Agreements to State and Local Governments).

(7) 34 CFR Part 81 (General Education Provisions Act—Enforcement).

(8) 34 CFR Part 82 (New Restrictions on Lobbying).

(9) 34 CFR Part 85 (Governmentwide Debarment and Suspension (Nonprocurement) and Governmentwide Requirements for Drug-Free Workplace (Grants)).

(10) 34 CFR Part 86 (Drug-Free Schools and Campuses).

(b) The regulations in this Part 367.

(c) The following provisions in 34 CFR Part 364:

(1) Section 364.4 (What definitions apply?).

(2) Section 364.5 (What is program income and how may it be used?)

(3) Section 364.6 (What requirements apply to the obligation of Federal funds and program income?)

(4) Section 364.30 (What notice must be given about the Client Assistance Program (CAP)?).

(5) Section 364.37 (What access to records must be provided?).

(6) Section 364.56 (What are the special requirements pertaining to the protection, use, and release of personal information?).

(d) The following provisions in 34 CFR Part 365:

(1) Section 365.13 (What requirements apply if the State's non-Federal share is in cash?).

(2) Section 365.14 (What conditions relating to cash or in-kind contributions apply to awards to grantees, subgrantees, or contractors?).

(3) Section 365.15 (What requirements apply if the State's non-Federal share is in kind?).

(4) Section 365.16 (What requirements apply to refunds and rebates?).

(Authority: 29 U.S.C. 711(c) and 796k)

§ 367.5 What definitions apply?

In addition to the definitions in 34 CFR 364.4, the following definitions also apply to this part:

Independent living services for older individuals who are blind means those services listed in § 367.3(b).

Older individual who is blind means an individual age fifty-five or older whose severe visual impairment makes competitive employment extremely difficult to obtain but for whom IL goals are feasible.

(Authority: 29 U.S.C. 711(c) and 796j)

Subpart B—What Are the Application Requirements?

§ 367.10 How does a designated State agency (DSA) apply for an award?

To receive a grant under section 752(i) or a reallotment grant under section 752(j)(4) of the Act, a DSA must submit to and obtain approval from the Secretary of an application for assistance under this program at the time, in the form and manner, and containing the agreements, assurances, and information, that the Secretary determines to be necessary to carry out this program.

(Approved by the Office of Management and Budget under control number 1820–0018.)

(Authority: 29 U.S.C. 796k(c)(2) and (i)(1))

§ 367.11 What assurances must a DSA include in its application?

An application for a grant under section 752(i) or a reallotment grant under section 752(j)(4) of the Act must contain an assurance that—

(a) Grant funds will be expended only for the purposes described in § 367.1;

(b) With respect to the costs of the program to be carried out by the State pursuant to this part, the State will make available, directly or through donations from public or private entities, non-Federal contributions toward these costs in an amount that is not less than $1 for each $9 of Federal funds provided in the grant;

(c) In carrying out § 367.1(a) and (b), and consistent with 34 CFR 364.28, the DSA will seek to incorporate into and describe in the State plan under section 704 of the Act any new methods and approaches relating to IL services for older individuals who are blind that are developed by projects funded under this part and that the DSA determines to be effective;

(d) At the end of each fiscal year, the DSA will prepare and submit to the Secretary a report, with respect to each project or program the DSA operates or administers under this part, whether directly or through a grant or contract, that contains, information that the Secretary determines necessary for the proper and efficient administration of this program, including—

(1) The number and types of older individuals who are blind, including older individuals who are blind from minority backgrounds, and are receiving services;

(2) The types of services provided and the number of older individuals who are blind and are receiving each type of service;

(3) The sources and amounts of funding for the operation of each project or program;

(4) The amounts and percentages of resources committed to each type of service provided;

(5) Data on actions taken to employ, and advance in employment, qualified—

(i) Individuals with significant disabilities;

(ii) Older individuals with significant disabilities who are blind;

(iii) Individuals who are members of racial or ethnic minority groups;

(iv) Women; and

(v) Elderly individuals;

(6) A comparison, if appropriate, of prior year activities with the activities of the most recent year; and

(7) Any new methods and approaches relating to IL services for older individuals who are blind that are developed by projects funded under this part;

(e) The DSA will—

(1) Provide services that contribute to the maintenance of, or the increased independence of, older individuals who are blind; and

(2) Engage in—

(i) Capacity-building activities, including collaboration with other agencies and organizations;

(ii) Activities to promote community awareness, involvement, and assistance; and

(iii) Outreach efforts;

(f) The application is consistent with the State plan for providing IL services required by section 704 of the Act and Subpart C of 34 CFR Part 364; and

(g) The applicant has been designated by the State as the sole State agency authorized to provide rehabilitation services to individuals who are blind.

(Approved by the Office of Management and Budget under control number 1820–0018.)

(Authority: 29 U.S.C. 711(c) and 796k(d), (f), (h), and (i))

Subpart C—How Does the Secretary Award Discretionary Grants on a Competitive Basis?

§ 367.20 Under what circumstances does the Secretary award discretionary grants on a competitive basis to States?

(a) In the case of a fiscal year for which the amount appropriated under section 753 of the Act is less than $13,000,000, the Secretary awards discretionary grants under this part on a competitive basis to States.

(b) Subparts A, B, C, and E of this part govern the award of competitive grants under this part.

(Authority: 29 U.S.C. 796k(b)(1))

§ 367.21 How does the Secretary evaluate an application for a discretionary grant?

(a) The Secretary evaluates an application for a discretionary grant on the basis of the criteria in § 367.22.

(b) The Secretary awards up to 100 points for these criteria.

(c) The maximum possible score for each criterion is indicated in parentheses.

(Authority: 29 U.S.C. 711(c) and 796k(b)(1) and (i)(1))

§ 367.22 What selection criteria does the Secretary use?

The Secretary uses the following criteria to evaluate an application for a discretionary grant:

(a) *Extent of need for the project* (20 points).

(1) The Secretary reviews each application to determine the extent to which the project meets the specific needs of the program, including consideration of—

(i) The needs addressed by the project;

(ii) How the applicant identified those needs;

(iii) How those needs will be met by the project; and

(iv) The benefits to be gained by meeting those needs.

(2) The Secretary reviews each application to determine-(i) The extent that the need for IL services for older individuals who are blind is justified, in terms of complementing or expanding existing IL and aging programs and facilities; and

(ii) The potential of the project to support the overall mission of the IL program, as stated in section 701 of the Act.

(b) *Plan of operation* (25 points). The Secretary reviews each application to determine the quality of the plan of operation for the project, including—

(1) The quality of the design of the project;

(2) The extent to which the plan of management ensures proper and efficient administration of the project;

(3) How well the objectives of the project relate to the purpose of the program;

(4) The quality and adequacy of the applicant's plan to use its resources (including funding, facilities, equipment, and supplies) and personnel to achieve each objective;

(5) How the applicant will ensure that project participants who are otherwise eligible to participate are selected without regard to race, color, national origin, gender, age, or disability;

(6) A clear description of how the applicant will provide equal access to services for eligible project participants who are members of groups that have been traditionally under-represented, including members of racial or ethnic minority groups; and

(7) The extent to which the plan of operation and management includes involvement by older individuals who are blind in planning and conducting program activities.

(c) *Quality of key personnel* (10 points).

(1) The Secretary reviews each application to determine the qualifications of the key personnel the applicant plans to use on the project, including—

(i) The qualifications of the project director;

(ii) The qualifications of each of the other management and decision-making personnel to be used in the project;

(iii) The time that each person referred to in paragraphs (c)(1)(i) and (ii) of this section will commit to the project;

(iv) How the applicant, as part of its nondiscriminatory employment practices, will ensure that its personnel are selected for employment without regard to race, color, national origin, gender, age, or disability; and

(v) The extent to which the applicant, as part of its nondiscriminatory employment practices, encourages applications for employment from persons who are members of groups that have been traditionally under-represented, including—

(A) Members of racial or ethnic minority groups;

(B) Women;

(C) Persons with disabilities; and

(D) Elderly individuals.

(2) To determine personnel qualifications under paragraphs (c)(1)(i) and (ii) of this section, the Secretary considers—

(i) Experience and training in fields related to the scope of the project; and

(ii) Any other qualifications that pertain to the objectives of the project.

(d) *Budget and cost effectiveness* (5 points). The Secretary reviews each application to determine the extent to which—

(1) The budget is adequate to support the project;

(2) Costs are reasonable in relation to the objectives of the project; and

(3) The applicant demonstrates the cost-effectiveness of project services in comparison with alternative services and programs available to older individuals who are blind.

(e) *Evaluation plan* (5 points). The Secretary reviews each application to determine the quality of the evaluation plan for the project, including the extent to which the applicant's methods of evaluation—

(1) Accurately evaluate the success and cost-effectiveness of the project;

(2) Are objective and produce data that are quantifiable; and

(3) Will determine how successful the project is in meeting its goals and objectives.

(4) (Cross-reference: See 34 CFR 75.590.)

(f) *Adequacy of resources* (5 points). The Secretary reviews each application to determine the adequacy of the resources that the applicant plans to devote to the project, including accessibility of facilities, equipment, and supplies.

(g) *Service comprehensiveness* (20 points).

(1) The Secretary reviews each application to determine the extent to which the proposed outreach activities promote maximum participation of the target population within the geographic area served by the project.

(2) The Secretary reviews each application to determine the extent to which the DSA addresses the unmet IL needs in the State of older individuals with varying degrees of significant visual impairment. In making this determination, the Secretary reviews the extent to which the DSA makes available appropriate services listed in § 367.3(b), which may include any or all of the following services:

(i) Orientation and mobility skills training that will enable older individuals who are blind to travel independently, safely, and confidently in familiar and unfamiliar environments.

(ii) Skills training in Braille, handwriting, typewriting, or other means of communication.

(iii) Communication aids, such as large print, cassette tape recorders, and readers.

(iv) Training to perform daily living activities, such as meal preparation, identifying coins and currency, selection of clothing, telling time, and maintaining a household.

(v) Provision of low-vision services and aids, such as magnifiers to perform reading and mobility tasks.

(vi) Family and peer counseling services to assist older individuals who are blind adjust emotionally to the loss of vision as well as to assist in their integration into the community and its resources.

(h) *Likelihood of sustaining the program* (10 points). The Secretary reviews each application to determine—

(1) The likelihood that the service program will be sustained after the completion of Federal project grant assistance;

(2) The extent to which the applicant intends to continue to operate the service program through cooperative agreements and other formal arrangements; and

(3) The extent to which the applicant will identify and, to the extent possible, use comparable services and benefits that are available under other programs for which project participants may be eligible.

(Approved by the Office of Management and Budget under control number 1820–0018.)

(Authority: 29 U.S.C. 711(c) and 796k(b)(1) and (i)(1))

§ 367.23 What additional factor does the Secretary consider?

In addition to the criteria in § 367.22, the Secretary considers the geographic distribution of projects in making an award.

(Authority: 29 U.S.C. 711(c) and 796k(b)(1) and (i)(1))

Subpart D—How Does the Secretary Award Contingent Formula Grants?

§ 367.30 Under what circumstances does the Secretary award contingent formula grants to States?

(a) In the case of a fiscal year for which the amount appropriated under section 753 of the Act is equal to or greater than $13,000,000, grants under this part are made to States from allotments under section 752(c)(2) of the Act.

(b) Subparts A, B, D, and E of this part govern the award of formula grants under this part.

(Authority: 29 U.S.C. 796k(c))

§ 367.31 How are allotments made?

(a) For purposes of making grants under section 752(c) of the Act and this subpart, the Secretary makes an allotment to each State in an amount determined in accordance with section 752(j) of the Act.

(b) The Secretary makes a grant to a DSA in the amount of the allotment to the State under section 752(j) of the Act if the DSA submits to and obtains approval from the Secretary of an application for assistance under this program that meets the requirements of section 752(i) of the Act and §§ 367.10 and 367.11.

(Approved by the Office of Management and Budget under control number 1820–0018.)

(Authority: 29 U.S.C. 796k(c)(2))

§ 367.32 How does the Secretary reallot funds under section 752(j)(4) of the Act?

(a) From the amounts specified in paragraph (b) of this section, the Secretary may make reallotment grants to States, as determined by the Secretary, whose population of older individuals who are blind has a substantial need for the services specified in section 752(d) of the Act and § 367.3(b), relative to the populations in other States of older individuals who are blind.

(b) The amounts referred to in paragraph (a) of this section are any amounts that are not paid to States under section 752(c)(2) of the Act and § 367.31 as a result of—

(1) The failure of a DSA to prepare, submit, and receive approval of an application under section 752(i) of the Act and in accordance with §§ 367.10 and 367.11; or

(2) Information received by the Secretary from the DSA that the DSA does not intend to expend the full amount of the State's allotment under section 752(c) of the Act and this subpart.

(c) A reallotment grant to a State under paragraph (a) of this section is subject to the same conditions as grants made under section 752(a) of the Act and this part.

(d) Any funds made available to a State for any fiscal year pursuant to this section are regarded as an increase in the allotment of the State under § 367.31 for that fiscal year only.

(Approved by the Office of Management and Budget under control number 1820–0018.)

(Authority: 29 U.S.C. 796k(j)(4))

Subpart E—What Conditions Must Be Met After an Award?

§ 367.40 What matching requirements apply?

(a) Non-Federal contributions required by § 367.11(b) may be in cash or in kind, fairly evaluated, including plant, equipment, or services.

(b) For purposes of non-Federal contributions required by § 367.11(b), amounts provided by the Federal Government, or services assisted or subsidized to any significant extent by the Federal Government, may not be included in determining the amount of non-Federal contributions.

(Authority: 29 U.S.C. 796k(f))

§ 367.41 When may a DSA award grants or contracts?

(a) A DSA may operate or administer the program or projects under this part to carry out the purposes specified in § 367.1, either directly or through—

(1) Grants to public or private nonprofit agencies or organizations; or

(2) Contracts with individuals, entities, or organizations that are not public or private nonprofit agencies or organizations.

(b) Notwithstanding paragraph (a) of this section, a DSA may enter into assistance contracts, but not procurement contracts, with public or private nonprofit agencies or organizations in a manner consistent with 34 CFR 366.32(e).

(Authority: 29 U.S.C. 796k(g) and (i)(2)(A))

§ 367.42 When does the Secretary award noncompetitive continuation grants?

(a) In the case of a fiscal year for which the amount appropriated under section 753 of the Act is less than $13,000,000, the Secretary awards noncompetitive continuation grants for a multi-year project to pay for the costs of activities for which a grant was awarded—

(1) Under Chapter 2 of Title VII of the Act; or

(2) Under Part C of Title VII of the Act, as in effect on October 28, 1992.

(b) To be eligible to receive a noncompetitive continuation grant under this part, a grantee must satisfy the applicable requirements in this part and in 34 CFR 75.253.

(Approved by the Office of Management and Budget under control number 1820–0018.)

(Authority: 29 U.S.C. 796k(b)(2))

[FR Doc. 94–19687 Filed 8–12–94; 8:45 am]

BILLING CODE 4000–01–P

federal register

Monday
August 15, 1994

Part VI

Department of Education

34 CFR Part 607

Strengthening Institutions Program; Final Rule

DEPARTMENT OF EDUCATION

34 CFR Part 607

RIN 1840–AB78

Strengthening Institutions Program

AGENCY: Department of Education.

ACTION: Final regulations.

SUMMARY: The Secretary revises the regulations governing the Strengthening Institutions Program. These final regulations are needed to improve the functioning of the program and to implement changes made to the program's authorizing statute, Title III, Part A, of the Higher Education Act of 1965 (HEA), by the Higher Education Amendments of 1992, Pub. L. 102–325 (1992 Amendments) and the Higher Education Technical Amendments of 1993, Pub. L. 103–208.

EFFECTIVE DATE: These regulations take effect either 45 days after publication in the **Federal Register** or later if the Congress takes certain adjournments. If you want to know the effective date of these regulations, call or write the Department of Education contact person. A document announcing the effective date will be published in the **Federal Register.**

FOR FURTHER INFORMATION CONTACT: Louis J. Venuto. Telephone: (202) 708–8839. Individuals who use a telecommunications device for the deaf (TDD) may call the Federal Information Relay Service (FIRS) at 1–800–877–8339 between 8 a.m. and 8 p.m., Eastern time, Monday through Friday.

SUPPLEMENTARY INFORMATION: The Strengthening Institutions Program provides grants to institutions of higher education to improve their academic programs, institutional management, and fiscal stability. The purpose of the program is to increase the self-sufficiency of participating institutions and to strengthen their capacity to make a substantial contribution to the higher education resources of the nation.

The Strengthening Institutions Program is an important part of implementing the National Educational Goals. Specifically, the program addresses Goal 5, that every adult American will possess the knowledge and skills necessary to compete in a global economy and exercise the rights and responsibilities of citizenship, by expanding educational opportunities for students who attend the institutions that receive assistance under this program.

On September 16, 1993, the Secretary published a notice of proposed rulemaking (NPRM) in the **Federal Register** (58 FR 48478) to implement changes made to the program by the 1992 Amendments, to more sharply define institutional eligibility requirements, and to improve the functioning of the program.

Analysis of Comments and Changes

In response to the Secretary's invitation in the NPRM, 212 parties submitted comments on the proposed regulations. An analysis of the comments and of the changes in the regulations since publication of the NPRM follows.

The issues are grouped according to sections of the proposed regulations. Technical and other minor changes—and suggested changes the Secretary is not legally authorized to make under the applicable statutory authority—are not generally addressed.

Section 607.3(b) What is the enrollment of needy students?

—Sections 607.3(b) (3) and (4)

Comments: Under section 312(b)(1)(A) of the HEA, an institution must have "an enrollment of needy students" to qualify as an eligible institution under the Strengthening Institutions Program. Under section 312(c) of the HEA, an institution has an enrollment of needy students if (1) at least 50 percent of its degree students receive need-based student financial assistance; or (2) a substantial percentage of its students receive Pell Grants. However, an institution that does not satisfy this requirement can nevertheless qualify as an eligible institution if the Secretary waives this requirement under section 352() of the HEA.

Prior to the Higher Education Amendments of 1992, section 352(a) of the HEA required the Secretary to waive the "needy student requirement" if the institution satisfied any one of the six criteria established in section 352(a)(1) through (6). As a result of the 1992 Amendments, the Secretary now has discretion to waive the needy student requirement if the institution satisfies any one of the six criteria listed in that section. These six criteria are listed in § 607.3(b) of the program regulations.

In the NPRM, the Secretary proposed making the waiver criteria in § 607.3(b) (3) and (4) more explicit. Section 607.3(b)(3) of the current regulations permits the Secretary to waive the needy student enrollment requirement if an institution can demonstrate that it substantially increases higher education opportunities for low-income students who are also educationally disadvantaged, underrepresented in higher education, or minorities. The Secretary considered quantifying this requirement by requiring that an applicant demonstrate that its enrollment of these students has increased by 200 or at least 20 percent, whichever is greater, at the end of three years in order to get this waiver. The Secretary requested public comment on this proposal. The Secretary also solicited comment on whether an institution could automatically satisfy this requirement if these students constitute at least 50 percent of an institution's total enrollment.

Section 607.3(b)(4) of the current regulations permits the Secretary to waive the needy student enrollment requirement if an institution can demonstrate that it substantially increases the higher education opportunities for individuals who reside in an area that is not included in a "metropolitan statistical area" and who are unserved by postsecondary institutions. The Secretary considered quantifying this requirement by requiring that an applicant demonstrate that its enrollment of these students has increased by 200 or at least 20 percent, whichever is greater, at the end of three years. The Secretary requested public comment on this proposal. The Secretary also solicited comment on whether an institution could automatically satisfy this requirement if these students constitute at least 50 percent of an institution's total enrollment.

Several commenters oppose the proposed changes to §§ 607.3(b) (3) and (4) and believe that an institution should continue to provide whatever evidence it believes is appropriate to satisfy these waiver criteria.

Commenters believe that institutions may be unable to achieve the proposed increases in enrollment. First, commenters believe demographics may prohibit many institutions from increasing their enrollments of disadvantaged and unserved students by the numbers and percentages in the proposed regulations. Second, one commenter fears that nationwide decreases in enrollment of disadvantaged students may prevent institutions from achieving the proposed increases in enrollment. Third, commenters believe that small community colleges may be unable to achieve the proposed increases in enrollment because the students who attend these institutions often are not counted for purposes of eligibility due to the fact that they often attend less than half-time. Finally, commenters believe that large urban institutions may be unable to achieve the proposed increases in enrollment because of budgetary restraints that have forced

many of these institutions to freeze enrollments.

Several commenters believe that it may be difficult for small institutions to document increases in enrollment. These commenters believe that it is impossible for many small institutions, for example, to provide counts by ethnicity of students currently being served and to reconstruct counts from the base year.

Commenters oppose the emphasis on the quantity of students served, rather than on the quality of services and benefits provided to these students. Commenters fear that placing the emphasis in the number of students enrolled will cause institutions to provide lower quality services to a greater number of students.

One commenter believes that the proposed changes unfairly penalize institutions that have already increased enrollment of disadvantaged and unserved students and rewards those institutions with low enrollments of these students.

One commenter opposes the proposed changes because they penalize institutions that have decreasing numbers of students taking more credit hours. The commenter believes that these institutions should not be penalized because educational programs that encourage students to take fewer credit hours have proven successful in promoting greater student retention and success.

One commenter opposes the proposed change because it appears to indicate a change in the program from one that was intended to provide support to increase educational opportunities for needy students to one that is intended to target a specific population. These commenters believe this change is contrary to statutory intent.

Several commenters representing tribal institutions oppose the proposed changes to § 607.3(b)(3), which would require an institution to show an increase in enrollment of disadvantaged students by 200 or by at least 20 percent, since this would adversely affect tribal institutions which do not focus on low-income enrollment. These commenters, however, favor the other proposed change which would afford automatic eligibility to institutions that enroll at least 50 percent low-income minorities. Another commenter favors the proposed change in its entirety. The Commenters believes that the proposed change would encourage many state institutions to form a bridge with two-year tribal colleges for the purpose of increasing their enrollment, and thus, ensure educational opportunities for reservation tribal members.

Several commenters asked for certain clarifications of proposed § 607.3(b)(3). Several commenters inquire how "low-income," "educational disadvantaged," "underrepresented in higher education," and "minorities" will be defined. Commenters representing community colleges oppose any definition of "low-income" that is based on Pell eligibility since many students attending community colleges are employed full-time and thus are not eligible for Pell Grants. These commenters also state that many students are reluctant to fill out federal financial assistance forms. Several commenters also inquire how the 20 percent increase in enrollment of disadvantaged students would be measured. One commenter asked if California institutions could count a 20 percent increase in its Educational Opportunity Program & Services enrollment as meeting that standard.

Commenters also request certain clarifications of both § 607.3(b) (3) and (4). Several commenters ask what is the basis for requiring institutions to show increases of 200 or at least 20 percent, rather than some other number or percent. Another commenter inquires whether the "end of three years" has already occurred or whether it is to occur in the future. One commenter also inquires about the sanctions for failing to comply with a promise if the waiver provisions are prospective. Several commenters inquire what type of student could be counted as being included in the population identified in § 607.3(b) (3) and (4). These commenters ask whether the population would include only full-time, degree-seeking students, or whether part-time students would also be included.

One commenter requested that the Secretary remove "whichever is greater" from proposed § 607.3(b) (3) and (4). This commenter suggests this change to allow a small college to be eligible under the proposed regulations. Another commenter requests substituting "whichever is less" for "whichever is greater" in § 607.3(b)(4) for the same reason. Finally, another commenter suggests that the Secretary change "an area that is not included in a metropolitan statistical area" to "rural area" in proposed § 607.3(b)(4).

Several commenters offer alternatives to proposed § 607.3(b) (3) and (4). Commenters suggest that the Secretary require institutions to demonstrate that the enrollment of disadvantaged and unserved students has increased at a rate that exceeds the national average enrollment rate for that type of institution for the last three years for which the Department has available statistics. These commenters believe that this alternative would enable institutions to demonstrate that they are exceeding the growth rate for needy students that is experienced by similar institutions, *i.e.*, two-year public, two-year private, four-year public, and four-year private institutions. In addition, these commenters believe that the comparison with like institutions is consistent with the means used by the Department to measure whether institutions meet the two eligibility criteria for the program. Another commenter questions whether the Department's statistics are valid. This commenter suggests that this alternative qualitative criterion also evaluate or measure an institution's effectiveness in providing improved or expanded services to students.

Another commenter suggests that the Secretary ask for documentation of the institution's past and current efforts to increase enrollments, rather than specify a numerical goal to be demonstrated. This commenter feels it is unfair for the Secretary to initiate changes in services and programs without also providing funds to support the implementation of these changes.

Discussion: The Strengthening Institutions Program has only two specific institutional eligibility requirements. One requires that an eligible institution have an "enrollment of needy students." An institution may satisfy this requirement if it serves a "substantial" percentage of Pell Grant recipients.

To determine whether an institution serves a substantial percentage of Pell Grant recipients, an institution must first determine the percentage of Pell Grant recipients at the institution. The institution calculates this rate by dividing the number of enrolled Pell Grant recipients by the number of enrolled potential Pell Grant recipients, *i.e.*, degree students enrolled on at least a half-time basis.

For the last application cycle, the Secretary determined that an institution served a substantial percentage of Pell Grant recipients if the institution's percentage of potential Pell Grant recipients who received Pell Grants was at least 28.18 percent for two-year public institutions, 35.25 percent for two-year private institutions, 28.98 percent for four-year public institutions, and 29.07 percent for four-year private institutions.

One of the waiver criteria requires an applicant to demonstrate that it contributes substantially to increasing higher educational opportunities for educating low-income students who are also minority students, educationally

disadvantaged, or underrepresented in higher education. Another requires an applicant to substantially increase higher education opportunities for individuals in rural or other isolated areas which are unserved by postsecondary education. In the preamble to the proposed regulations, the Secretary proposed quantifying these increases. However, based upon public comments, the Secretary will not require these quantifications in the final regulations. Instead, the Secretary will develop a set of more specific questions relating to these waiver provisions in the eligibility application. The Secretary anticipates proposing standards for these waiver provisions after undertaking a careful review of the information received from these questions.

The definition of "low-income student" is included in § 607.3(c). The Secretary includes definitions of the terms "minority student," a student who is "educationally disadvantaged," and a student who is "underrepresented in higher education." The definition of "educationally disadvantaged" is adapted from the definition of "disadvantaged" under the Vocational and Applied Technology Education Programs—General Provisions (34 CFR 400.4(b)). The definitions of "minority student" and "underrepresented in higher education" mirror the definitions of these terms used in other higher education program regulations. The definitions are intended to clarify the meaning of these terms. The Secretary does not believe that these definitions will impose any additional administrative burden on parties affected by the regulations.

The Secretary has also reviewed the proposed alternative to require institutions to demonstrate that the enrollment of the disadvantaged and unserved students has increased at a rate that exceeds the national average enrollment rate for that type of institution for the last three years for which the Department has available statistics. This review found that the data to establish these thresholds are not available, and it would not be feasible to collect this data.

Changes: The Secretary revises § 607.7(b) to add definitions of "educationally disadvantaged," "minority student," and "underrepresented in higher education," The Secretary withdraws the proposed numerical standards.

—Section 607.3(b)(5) and (6)

Comments: Section 607.3(b)(5) provides a waiver of the needy student eligibility requirement if (1) An institution can demonstrate that the institution is located on or within 50 miles of an Indian reservation or a substantial population of Indians and (2) the institution will, if granted the waiver, substantially increase higher education opportunities for American Indians. Section 607.3(b)(6) provides a waiver of the needy student eligibility requirement if an institution can demonstrate that the institution will, if granted the waiver, substantially increase the higher education opportunities for Black Americans, Hispanic Americans, Native Americans, Asian Americans or Pacific Islanders, including Native Hawaiians.

The Secretary proposed changing these two waiver provisions by requiring an institution to provide a plan for increasing, during the next three years, its enrollment of subject students by some number or percent that would be the same for all institutions, and either maintain or put in place special programs and services designed to support these students. If an applicant for a waiver has applied for and received a waiver under these criteria in a previous year, the Secretary would base his decision to grant another waiver, in part, on whether the institution did what it said it was going to do to get the previous waiver. The Secretary requested comment on these proposals.

Several commenters believe that the proposed changes are non-specific, complex, and bureaucratic. These commenters believe that the plan "to increase by some number or percent that would be the same for all institutions" is not sufficiently defined to provide guidance.

Several commenters believe the requirement that institutions "put in place special programs and services designed to support these students" is unnecessary since most institutions serving low-income educationally disadvantaged students already have these programs in place. One commenter opposes this proposed requirement on the grounds that small community colleges do not have sufficient resources to provide these services.

One commenter is concerned with the phrase "that would be the same for all institutions." This commenter believes that the Secretary should not apply the same number of students to institutions of varying sizes, and that it would be unjust to apply the same percentage to institutions currently serving few needy students to institutions currently serving a high percentage of these students.

One commenter supports a change that requires a plan to increase by some number or percent that is based on the demographic setting of an institution. Another commenter believes that the number or percentage selected should be the same as that established for §§ 607.3(b)(3) and (4). Finally, several commenters suggest that an institution be required to demonstrate that enrollment of the target group of students has increased at a rate that exceeds the national average enrollment for that type of institution for the last three years for which the Department has available statistics.

Discussion: The Secretary believes that some commenters may have misunderstood the proposed changes to § 607.3(b)(5) and (6). The Secretary did not intend to offer any specific regulatory language change in the preamble. In particular, the Secretary did not intend to propose regulatory language that would require a institution to provide a plan for increasing, during the next three years, its enrollment of subject students by "some number or percent that would be the same for all institutions." Rather, the Secretary was soliciting public comment on this concept, specifically on what percentages and numbers may be appropriate for these waiver provisions.

Nevertheless, as in § 607.3(b)(3) and (4), the Secretary has determined, based upon the thoughtful public comment received, not to require these quantifications in the final regulations. Instead, the Secretary will develop a set of more specific questions relating to these waiver provisions in the eligibility application. The Secretary anticipates proposing standards for these waiver provisions after undertaking a careful review of the information received from these questions.

Changes: None.

Section 607.4(c) What are low educational and general expenditures?

Comments: Several commenters oppose the proposal that would limit a waiver of the educational and general expenditure eligibility (E&G) requirement to institutions that do not obtain waivers of the enrollment of needy students requirement. Commenters believe that the two waiver provisions are independent, and waivers should be allowed for both. One commenter is concerned that institutions with high cost, high technology programs will be prevented from participating if they do not receive a waiver of the E&G eligibility requirement even if they receive a waiver of the needy student

requirement. This commenter states that institutions with a large number of continuing education students or college preparatory students may have higher costs per student since these students are not eligible to be counted as full-time equivalent students. Another commenter is concerned that the proposed change would mean that institutions located in metropolitan areas with high costs of living would be eliminated because their expenditures per student generally reflect the economic conditions of their geographic area. This commenter also fears that small rural institutions that provide a wide range of costly services to economically disadvantaged students would also be denied access to the program.

Several commenters request that the Secretary consider requiring better documentation from institutions using the waiver provisions rather than precluding an institution from receiving both types of waivers. One commenter suggests requiring an institution to (1) Provide a longitudinal enrollment history to explain why there is currently a reduction in enrollment to demonstrate low enrollment; (2) provide comparable data of similar institutions on size and mission with regards to salaries, energy costs, and facilities management to demonstrate the high cost of the living area; and (3) to fully explain the reasoning behind its low students to faculty ratio where an institution is operating a high cost program (*e.g.*, technology or medical program).

One commenter requests clarification of what is "persuasive evidence" by the institution that (1) It has low student enrollment; and (2) the institution is located in a high cost-of-living area. The commenter also requests a definition of "a high cost-of-living area" which would pay up to 33 percent higher costs to bring goods and services to isolated, rural areas. The commenter believes this definition provides a more equitable and less arbitrary means of measuring this requirement.

Discussion: The Secretary agrees that applicants should continue to be allowed to request waivers of both the needy student and educational and general expenditures requirements. The Secretary believes that both waivers are necessary to account for the different conditions (*e.g.*, urban versus rural areas) that may exist among institutions. Therefore, a change is not necessary in the current regulations.

The Secretary notes that both types of waivers have their own separate set of waiver options. If applicants are unable to meet both the needy student and educational and general expenditures requirements, then they must develop two separate waiver narratives addressing the specific criteria for each waiver.

The Secretary agrees with the comments and suggestions recommending that applicants provide appropriate waiver documentation. Because institutional demographics differ due to size, control, location, and structure and function, the regulations have not been written to detail the correct or acceptable narrative response. Rather, the Secretary believes that applicants should retain the flexibility, within the broad terms of the waiver options, to develop narratives containing specific evidence that meets the requirement but is developed according to the institution's unique circumstances. In fact, many of the commenters' suggestions are some of the elements used by applicants to justify their waiver narratives.

Changes: None.

Section 607.8 What is a comprehensive development plan and what must it contain?

Comments: Several commenters believe that the Secretary should further clarify how a comprehensive development plan (CDP) differs from activity required under a project plan. These commenters also suggest eliminating the points awarded to the CDP, require that it not exceed 10 pages, and establish a page limit for the number of pages for each activity narrative.

One commenter believes that the present nine elements of the CDP should not be revised. The commenter believes that the present nine areas keep the proposal within bounds in planning and carrying out an activity.

One commenter inquires whether additional information will be required under the CDP or requested in the application package. For example, the commenter inquires whether an applicant would be required to provide background information regarding the student population served by the institution, the mission of the institution, and other information needed to give the reader a context in which to read the remainder of the plan, activity narratives, and its request for funds.

One commenter suggests that the application further stipulate that the CDP address the strengthens and weaknesses of the institution as a result of an analysis of the external and internal trends and assumptions identified within the institutional environment. This commenter also suggests that the guidelines reinforce participation in the planning process by developing a guideline requiring the description of the planning process and an evaluative criterion worth three points assessing the extent to which the process is sound, systematic, participatory, and likely to return in a viable institutional plan.

Discussion: Although there is a correlation between the CDP and the description of activities in the project plan, they are not in any way identical. Section 351(b)(1) of the HEA requires the applicant to set forth a CDP to strengthen the institution's academic quality, institutional management, financial stability, and otherwise provide for institutional self-sufficiency and growth. The CDP provides a full description of the applicant's overall plan for achieving growth and self-sufficiency. This description is centered on a discussion of the institution's current analysis of its strengths and weaknesses as well as its long-range goals and objectives. The activity narratives, meanwhile, explain the rationale for each strategy designed to address the problems and weaknesses described in the CDP.

In the NPRM, the Secretary reduced the factors to be specifically addressed in the CDP. The elimination of several factors, including the assumptions statement, timeframes, resource requirements, and the separate evaluation of the CDP, is designed to focus the narrative on only the most important issues related to institutional planning. The assumptions statement, which is based on an analysis of external and internal trends projected to affect the institution's future, was eliminated in the NPRM as an element of the CDP because evaluators found it difficult to assign quality points to future estimates. Applicants, however, may find it useful to continue this exercise as part of their overall planning.

The reduction of CDP factors will have the effect of streamlining the plan, and, thereby, reduce the number of pages needed to respond. Further, the weighted points assigned to the four required factors represent the importance the Secretary places on each factor. Moreover, the Secretary does not agree that the CDP should not be scored. The Secretary believes that the quality of an institution's plan is essential to determining funding decisions and must, therefore, be evaluated.

The Secretary encourages applicants to describe briefly their student populations, their institutional mission, and generally provide helpful background information about their

institution as a way of introducing their institutions to evaluators. This additional information is not evaluated and can be provided in a few pages. Although the Secretary has always strongly encouraged applicants to provide only the information needed to respond to the selection criteria, the Secretary does not believe it is necessary or useful to enforce a limit on the number of CDP and activity narrative pages.

Chages: None.

Section 607.10 What activities may and may not be carried out under a grant?

—Section 607.10(b) Development grants; allowable activities

Comments: One commenter suggests that the Secretary add a provision to proposed § 607.10(b) that the listed activities are examples only and do not represent priorities of the Secretary. Second, this commenter believes that the list of suggested activities should be updated at least every five years.

One commenter believes that the list of eligible activities should include activities that support regional accreditation or reaccreditation.

Finally, one commenter opposes proposed § 607.10(b)(1)(iii), which includes as an allowable activity faculty development that provides faculty the skills and knowledge needed to acquire terminal degrees that are required to obtain or retain accreditation of an academic program or department. The commenter believes that providing funding to finance terminal degrees for faculty members will chiefly benefit a few select individuals rather than assist a college in achieving long-range institutional goals.

Discussion: The listed examples are illustrative—not exhaustive. However, the list of examples reflect section 311(b)(3) of the HEA, which provides that special consideration shall be given to applications from institutions that propose to engage in these activities. The Secretary believes that the intent to list these activities as examples is clear under § 607.10(b) since that section states that the allowable activities "include, but are not limited" to those listed. Therefore, the Secretary does not believe any change is necessary.

The listed activities are normally updated when the HEA is authorized, or about every five years.

The Secretary believes that the allowable activities under section 311(b)(3) of the HEA include efforts to maintain institutional accreditation. The Secretary believes that these efforts are supportable by Title III funding because efforts to achieve self-sufficiency would be severely hampered by an institution's loss of accreditation.

In a few instances, institutions apply for faculty development funds to enable faculty to obtain advanced or terminal degrees to maintain institutional accreditation. In these cases, the Secretary believes that the greater benefit accrues to the institution by maintaining its accreditation.

Changes: None.

—*Section 607.10(c) Development grants; unallowable activities*

Comments: One commenter opposes proposed § 607.10(c)(5), which prohibits the use of grant funds for developing and improving non-degree or non-credit courses other than basic skills development courses. The commenter is concerned that vocational certificate courses will be unallowable. The commenter believes that these courses provide many students attending community colleges with the flexibility to shift majors if needed, and to better match ability to educational targets.

The same commenter also opposes proposed § 607.10(c)(7) which prohibits the use of grant funds to purchase standard office equipment, such as furniture, file cabinets, bookcases, typewriters, or word processors. The commenter suggests adding the phrase "other than limited typewriters or word processors for the Project Director's office." The commenter states that in many developing institutions capital equipment is not available, even though they can find furniture on campus to set up the director's office.

Several commenters oppose proposed § 607.10(c)(8). These commenters believe that deans should be permitted to fill the position of project coordinator or activity director for Title III programs and to receive program funding as part of their salaries. These commenters believe that college deans do not serve as top-level administrators, but rather as first-line supervisors in the areas of instruction and student services. Commenters believe deans have the greatest expertise to handle the duties of Title III management or direction of an activity most effectively. Another commenter believes that this restriction constitutes an unwarranted intrusion into the autonomy of the institution and that the decision regarding who should be the project director should be made by the institution and the Secretary during grant negotiations, rather than be the subject of regulation.

One commenter opposes proposed § 607.10(c)(9) which prohibits grant funds from being used for costs of organized fund-raising. The commenter believes that fund-raising is necessary to broaden an institution's funding base.

Discussion: The Secretary includes courses leading to a certificate or another recognized educational credential as a "degree" course; thus, the development of courses leading to a certificate or other recognized educational credential offered by the institution is an allowable program cost. The prohibition on the use of grant funds to support non-degree or non-credit courses (*e.g.*, courses offered in the evening or on weekends that are designed to provide instruction in self-improvement or constructive use of leisure time) is intended to focus grant funds upon developmental activities most central to the college's mission. The Secretary notes, however, that grant funds may be used to support basic skills developmental courses that are intended to provide the requisite skills in reading, math, and writing to students who are marginal in their ability to persist in college.

The Secretary believes that the prohibition in § 607.10(c)(7) on the use of grant funds to purchase standard office equipment, such as furniture, file cabinets, bookcases, typewriters, or word processors, is necessary. The Secretary believes that grant funds may be used to purchase necessary equipment support on developmental activities, rather than on the purchase of this kind of operational equipment.

The Secretary views the position of Dean as one that has college-wide administrative authority and responsibilities. The Secretary continues to believe that payment of Strengthening Institutions Program funds to support that position supplants institutional funds. However, the Secretary understands that certain institutional officials are called "Dean" but do not have college-wide administrative authority and responsibilities. The Secretary does not object to these officials serving as key officials in a Strengthening Institutions Program and being paid with grant funds for their work on the federally funded project. Therefore, the Secretary has revised the regulation to include among the allowable activities the "payment of any portion of the salary of a dean, with proper justification, to fill a position under the project such as project coordinator or activity director." Proper justification includes evidence that the position entitled "Dean" is not considered to be one that has college-wide administrative authority and responsibilities.

The Secretary prohibits the use of grant funds for operational purposes such as fund raising. The Secretary believes this restriction is necessary to

focus program funding on developmental activities.

Changes: The Secretary revises the regulations by adding § 607.10(b)(7) to include among the allowable activities the payment of any portion of the salary of a dean, with proper justification, to fill a position under the project such as project coordinator or activity director. For purposes of this paragraph, proper justification includes evidence that the position entitled "Dean" is not one that has college-wide administrative authority and responsibility. The Secretary revises § 607.10(c)(8) by removing the word "dean."

Section 607.11 What must be included in individual development grant applications?

Comments: If grant funds are requested to continue or complete the activities, the Secretary proposed that an applicant for a development grant include a description of the activities funded under a prior grant. The Secretary also proposed that, if grant funds are requested for these purposes, the institution provide a justification for not completing the activities under the previous grant. One commenter suggests deleting the phrase "if grant funds are requested to complete the activities." This commenter believes that institutions should justify not having completed prior activities regardless of whether they are requesting funds to complete or continue the activities. The commenter believes that this is necessary to ensure accountability for past short-falls.

One commenter believes that the proposed change is unnecessary and would only require additional paperwork. The commenter believes that this information could be adequately contained in a former grantee's final performance report. Several commenters believe that the wording of the proposed change needs to be clarified to reflect that the only institutions required to report Part A grants that expired during the past five years are those that failed to complete any activities under those grants. Commenters state that, unless there are incomplete activities, there is no need for applicants to have the additional burden of reporting on past grants. Commenters suggest adding "uncompleted activities" for "activities" in proposed § 607.11(c) to clarify this point.

One commenter suggests that, if the Secretary opts to require all institutions to report any grants that expired within the past five years, applicants also be required to report whether an external consultant assisted in writing the applications and whether an external consultant has been paid to assist in writing the application being submitted to the current competition. The commenter believes that this would allow a reader to make a more fully informed judgment about institutional capabilities.

One commenter believes the meaning of uncompleted activities needs to be clarified. This commenter also believes that new proposals should include a brief abstract of all completed activities of the previous five years.

Discussion: The Secretary agrees with the first commenter that institutions applying for new funds should justify not having completed prior activities regardless of whether they are requesting funds to complete or continue those activities.

To determine the impact of grant funds under the program goal of assisting institutions progress towards growth and self-sufficiency, the Secretary believes that grantees and former grantees must provide evaluation and assessment information to allow the Secretary to make more informed funding decisions. Some of this information can be obtained from continuation application status reports as well as final performance reports. However, as many as five years may have passed from the end of an institution's last grant in which time, changed circumstances and events may influence the next application. Hence, this updating in the new application is necessary. The Secretary also believes that this information is needed for all previously funded activities, regardless of whether they are completed or uncompleted, under § 607.11(c).

The use of external consultants to assist institutions in the preparation of applications or during the implementation of a funded project is a known practice. The Secretary does not believe, however, that requiring applicants to report the use of a consultant who has been paid to assist with the preparation of an application will allow a reviewer to make more fully informed judgment about institutional capabilities.

The Secretary defines uncompleted activities as those that had unmet objectives during the period of program funding, and are subsequently not completed by the institution after funding ended.

Changes: The Secretary revises § 607.11(c) to require institutions to justify not having completed activities regardless of whether they are requesting funds to complete or continue the activities. The Secretary deletes "if grant funds are requested to complete or continue the activities" in § 607.11(c).

Section 607.13 How many applications for a development grant may an institution submit?

Comments: The Secretary proposed to prevent an institution from submitting an individual development grant application and a cooperative grant application in the same year. Several commenters oppose this proposed change, stating that, although cooperative arrangements grants may be funded with funds under Part A of Title III of the HEA, they are described under Part D of Title III of the HEA, and institutions should not be prohibited from participating in both types of grants simultaneously. Commenters also believe that individual development grants and cooperative arrangement grants serve different purposes. Many commenters request that, if the Secretary implements the proposed change, institutions currently receiving funds under the program be grandfathered so that the new requirement is phased in only for new grant applications.

Several commenters request that proposed § 607.13 be revised to allow an institution with an approved multi-year development grant from prior year's competition to be part of a cooperative arrangement application in a subsequent fiscal year.

One commenter requests that the definition of "grantee" be clearly defined. The commenter believes it is unclear whether individual institutions participating under cooperative arrangement grant would become eligible to apply for an individual development grant after they are phased out of the cooperative arrangement grant or whether the units participating in the cooperative arrangement are deemed "grantees" during the full term of the grant. The commenter believes that the term "grantee" should be clearly defined so that individual academic units participating in a cooperative arrangement grant of a university system may be eligible for an individual development grant (after a one-year wait-out period) after being phased out of the cooperative arrangement.

Discussion: Prior to its amendment by the Higher Education Technical Amendments of 1993, section 313(b) of the HEA provided that, "In awarding grants under this part, the Secretary shall give priority to applicants who are not already receiving a grant under this part." The Higher Education Technical Amendments of 1993 added the following exception to that section: "except that a grant made under section

354(a)(1) shall not be considered a grant under this part." Section 354(a)(1) authorizes the Secretary to fund "cooperative arrangement" grants.

Given the funding history of the Strengthening Institutions Program, and the funding priority contained in section 313(b) of the HEA before its amendment, it was exceedingly unlikely that an applicant would have been able to receive both a cooperative arrangement grant and an individual development grant in the same year. Therefore, the Secretary proposed in § 607.13 that an institution could apply for only one type of grant. However, as a result of the amendment to section 313(b) of the HEA, the Secretary has eliminated that limitation in § 607.13.

Changes: The Secretary revises § 607.13 to provide that in any fiscal year, an institution of higher education may submit both an application for an individual development grant and be part of a cooperative arrangement application.

Section 607.20 How does the Secretary choose applications for funding?

Comments: Several commenters believe that institutions receiving a cooperative arrangement grant should have priority for funding. These commenters believe that it is unfair to apply the requirements in section 313(b) of the 1992 Amendments retroactively.

Several commenters believe that a recipient of a Title III planning grant be allowed to apply for a development grant.

Discussion: As discussed in the preceding section regarding § 607.13, as a result of the amendment to section 313(b) of the HEA, an institution that is a recipient of a cooperative arrangement grant is not a "grantee under this part," and thus does not fall into a lower priority under that section. As a result, a recipient of a cooperative arrangement grant may apply for and receive an individual development grant. The Secretary has amended § 607.20(b) to clarify this change. On the other hand, a recipient of a planning grant under the program is a grantee under this part, and the limitation of section 313(b) will continue to apply to such a grantee.

Changes: The Secretary revises proposed § 607.20(b) by redesignating § 607.20(b) as § 607.20(b)(1) and by adding a new § 607.20(b)(2) that provides, for purposes of determining priority for funding under § 607.20(b)(1), that an institution that is a recipient of a cooperative arrangement grant is not a grantee under his part.

Section 607.22 What are the selection criteria for development grants?

Comments: One commenter recommends moving proposed § 607.8(b)(4), which requires an institution to include in its CDP its methods and resources that will be used to institutionalize practices and improvements developed under the proposed project, to the selection criteria in § 607.22.

One commenter suggests that the Secretary retain the present selection criteria for development grants.

One commenter believes that proposed § 607.22(c)(2) needs to be clarified.The commenter is unsure whether "relevant studies or projects" are those the applicant institution must carry out prior to the application or are carried out by other institutions or individuals whose results have been made available in the professional literature to the field of the proposed activity.

One commenter requests that the Secretary reinforce in proposed § 607.22(a) participation by faculty and staff in the planning process in the development of the CDP. The commenter suggests that the description of the planning process and evaluative criteria be worth three points, assessing the extent to which the process is sound, systematic, participatory, and likely to result in a viable institutional plan. The commenter suggests that the points for the planning process be reallocated from the criteria in proposed § 607.22(a)(4).

Discussion: The Secretary believes that the institutionalization plan element is appropriately placed in § 607.8. The applicant's capacity to assume and maintain the costs of strengthening the academic, management, and fiscal conditions at the institution after program funds are terminated is a key indicator of achieving growth and self-sufficiency. Therefore, the description of the institutionalization plan is an important and necessary element of § 607.8. Accordingly, the quality of the institutionalization plan is included in § 607.22(a)(4) as a factor in determining the overall quality of development grant applications.

In the NPRM, the Secretary has refocused the emphasis and point value for the CDP, implementation strategy, evaluation, and budget, because these four factors embody the purpose of the program. The revised selection criteria retained in these final regulations will hopefully enable applicants to develop cohesive applications that respond to the program purpose. The Secretary also believes that the revised selection criteria will have a positive impact on the review process, because readers will better understand these four areas in the overall context of the program, and how they should evaluate them.

Applicants are not required to participate in the relevant studies or projects cited in § 607.22(c)(2). However, applicants are required to "defend" their implementation strategy for each activity by citing the results of relevant studies and projects and the potential for success in using the results to address the problems and weaknesses identified in development grant applications.

The applicant's institutionalization plan in § 607.22(a)(4) differs significantly from an institution's planning process that results in a viable institutional plan. What is being evaluated in § 607.22(a)(4) is the applicant's plan to assume and maintain the costs of the activities developed under the proposed project when Title III funds are terminated, not its institutional planning process. To incorporate language to require applicants to describe their institutional planning initiatives would run counter to the purpose of development grant applications.

The Secretary does not view the description of the institutionalization plan as a function of the project management section in § 607.22(e). Project management involves the routine procedures and lines of authority to ensure that the project is conducted effectively. Since the issue of institutionalization correlates with institutional growth and self-sufficiency, it is appropriately contained in § 607.22(a)(4).

Changes: None.

Section 607.24 How does the Secretary use an applicant's performance under a previous development grant when awarding a development grant?

Comments: Several commenters believe that an institution should not be allowed to informally demonstrate that it failed to meet the goals and objectives listed in its CDP. Commenters believe that every proceeding should be formally administered to maintain the credibility of the process.

One commenter requests that institutions receiving multi-year grants be able to request modifications of their objectives or equipment specifications for cause during the funding period. The commenter believes that this would encourage institutions to establish innovative goals rather than conservative goals for its program.

One commenter suggests deleting proposed § 607.24. The commenter does not believe this requirement can be properly administered given the Department's inability to collect meaningful data relating to grant projects.

Discussion: The Secretary did not intend to imply that a grantee may not formally demonstrate that it met the goals and objectives listed in its CDP. A grantee may make this showing formally under 34 CFR 75.720(b).

The Secretary is aware that every effort at institutional change may not be successful. In this regard, the Secretary allows minor modifications to a project to improve measurability of objectives and provide for more realistic outcomes if a change would improve the chances for success. The Secretary, however, would not permit modifications that propose to add new activities or that change the project's scope.

The Secretary determines whether an applicant successfully achieved the goals and objectives of its previous development grant based on performance reports, and any other similar reports such as audit or monitoring reports.

Changes: None.

Section 607.25 What priority does the Secretary use in awarding cooperative arrangement grants?

Comments: One commenter opposes § 607.25 if the priority given by the Secretary to cooperative arrangement applications means that additional points would be awarded to these applications.

Discussion: The Secretary does not intend to award additional points to cooperative arrangement applications. Rather, the Secretary intends to give priority among cooperative arrangement grant applications only if applications are of comparable merit. In these circumstances, priority would be afforded to those applications that meet the statutory conditions in section 354(b) of the Act. These statutory conditions require that the cooperative arrangement be geographically and economically sound or that it will benefit the applicant institutions.

In determining whether the cooperative arrangement is geographically sound, the Secretary considers the proximity of the institutions, and how their locations would impact on the potential success of the proposed project. To determine the economic soundness of the cooperative arrangement, the Secretary considers whether the institutions avoid costly duplicative efforts by sharing their resources for developing and managing the proposed project. Finally, the Secretary determines how the cooperative arrangement will benefit the applicant institutions by looking for evidence that demonstrates how the proposed project will enable all the participating institutions to alleviate the significant problems affecting their academic programs, institutional management, and fiscal stability.

Changes: None.

Other Comments

Comments: Several commenters urge the Secretary to hold Strengthening Institutions Program competitions every other year rather than every year, with high scoring applications that are not funded in the first year to be funded by rank order in the second year. These commenters believe that this change would reduce the paperwork burden of grantees, allow for increased attention of program managers, and provide for considerable cost savings in the administration of the program. Commenters differed on what would define a high scoring application. Some commenters suggest a high ranking application would be one that received a score of at least 90 points. Others believe that this cut-off is arbitrary.

Discussion: While these comments are not directed to any of the proposed regulations, the Secretary is pleased to receive suggestions that relate to potential improvements in the administration of the program. The Secretary, therefore, will consider these comments under the overall Federal government-wide effort to create a government that works better and costs less.

Changes: None.

Executive Order 12866

These final regulations have been reviewed in accordance with Executive Order 12866. Under the terms of the order the Secretary has assessed the potential costs and benefits of this regulatory action.

The potential costs associated with the final regulations are those resulting from statutory requirements and those determined by the Secretary to be necessary for administering this program effectively and efficiently. In assessing the potential costs and benefits—both quantitative and qualitative—of these regulations, the Secretary has determined that the benefits of the regulations justify the costs.

Intergovernmental Review

This program is subject to the requirements of Executive Order 12372 and the regulations in 34 CFR Part 79. The objective of the Executive order is to foster an intergovernmental partnership and a strengthened federalism by relying on processes developed by State and local governments for coordination and review of proposed Federal financial assistance.

In accordance with the order, this document is intended to provide early notification of the Secretary's specific plans and actions for this program.

Assessment of Educational Impact

In the notice of proposed rulemaking, the Secretary requested comments on whether the proposed regulations would require transmission of information that is being gathered by or is available from any other agency or authority of the United States.

Based on the response to the proposed rules and on its own review, the Department has determined that the regulations in this document do not require transmission of information that is being gathered by or is available from any other agency or authority of the United States.

List of Subjects in 34 CFR Part 607

College and universities, Grant program-education, Reporting and recordkeeping requirements.

Dated: April 12, 1994.

(Catalog of Federal Domestic Assistance Number 84.031A—Strengthening Institutions Program)

Richard W. Riley,

Secretary of Education.

The Secretary amends Part 607 of Title 34 of the Code of Federal Regulations as follows:

PART 607—STRENGTHENING INSTITUTIONS PROGRAM

1. The authority citation for Part 607 is revised to read as follows:

Authority: 20 U.S.C. 1057–1059c, 1066–1069f, unless otherwise noted.

2. Section 607.1 is revised to read as follows:

§ 607.1 What is the strengthening institutions program?

The purpose of the Strengthening Institutions Program is to provide grants to eligible institutions of higher education to improve their academic programs, institutional management, and fiscal stability in order to increase their self-sufficiency and strengthen their capacity to make a substantial contribution to the higher education resources of the Nation.

(Authority: 20 U.S.C. 1057)

3. Section 607.2 is revised to read as follows:

§ 607.2 What institutions are eligible to receive a grant under the strengthening institutions program?

(a) Except as provided in paragraphs (b) and (c) of this section, an institution of higher education is eligible to receive a grant under the Strengthening Institutions Program if—

(1) It has an enrollment of needy students as described in § 607.3(a), unless the Secretary waives this requirement under § 607.3(b);

(2) It has low average educational and general expenditures per full-time equivalent undergraduate student as described in § 607.4(a), unless the Secretary waives this requirement under § 607.4(c).

(3) It is legally authorized by the State in which it is located to be a junior college or to provide an educational program for which it awards a bachelor's degree; and

(4) It is accredited or preaccredited by a nationally recognized accrediting agency or association that the Secretary has determined to be a reliable authority as to the quality of education or training offered.

(b) A branch campus of an institution of higher education, if the institution as a whole meets the requirements of paragraphs (a)(1) through (4) of this section, is eligible to receive a grant under the Strengthening Institutions Program even if, by itself, it does not satisfy the requirements of paragraphs (a)(3) and (a)(4) of this section, although the branch must meet the requirements of paragraphs (a)(1) and (a)(2) of this section.

(c) For the purpose of paragraphs (b) and (c) of this section, an institution's enrollment consists of a head count of its entire student body.

(d) An institution that qualifies for a grant under the Strengthening Historically Black Colleges and Universities Program (34 CFR Part 608) or the Hispanic-Serving Institution Program (20 U.S.C. 1059c) and receives a grant under either of these programs for a particular fiscal year is not eligible to receive a grant under the Strengthening Institutions Program for that same fiscal year.

(Authority: 20 U.S.C. 1058, 1059c)

4. Section 607.4 is revised to read as follows:

§ 607.4 What are low educational and general expenditures

(a)(1) Except as provided in paragraph (b) of this section, for the purpose of § 6072(a)(2), an applicant institution's average educational and general expenditures per full-time equivalent undergraduate student in the base year must be less than the average educational and general expenditures per full-time equivalent undergraduate student of comparable institutions that offer similar institution in that year.

(2) For the purpose of paragraph (a)(1) of this section, the Secretary determines the average educational and general expenditure per FTE undergraduate student for institutions with graduate students that do not differentiate between graduate and undergraduate E&G expenditures by discounting the graduate enrollment using a factor of 2.5 times the number of graduate students.

(b) Each year, the Secretary notifies prospective applicants through a notice in the **Federal Register** of the average educational and general expenditures per full-time equivalent undergraduate student at comparable institutions that offer similar instruction.

(c) The Secretary may waive the requirement contained in paragraph (a) of this section, if the Secretary determines, based upon persuasive evidence provided by the institution, that—

(1) The institution's failure to satisfy the criteria in paragraph (a) of this section was due to factors which, if used in determining compliance with those criteria, distorted that determination; and

(2) The institution's designation as an eligible institution under this part is otherwise consistent with the purposes of this part.

(d) For the purpose of paragraph (c)(1) of this section, the Secretary considers that the following factors may distort an institution's educational and general expenditures per full-time equivalent undergraduate student—

(1) Low student enrollment;

(2) Location of the institution in an unusually high cost-of-living area;

(3) High energy costs;

(4) An increase in State funding that was part of a desegregation plan for higher education; or

(5) Operation of high cost professional schools such as medical or dental schools.

(Authority: 20 U.S.C. 1058 and 1067)

5. Section 607.6 is revised to read as follows:

§ 607.6 What regulations apply?

The following regulations apply to the Strengthening Institutions Program:

(a) The Education Department General Administrative Regulations (EDGAR) as follows:

(1) 34 CFR Part 74 (Administration of Grants to Institutions of Higher Education, Hospitals, and Nonprofit Organizations).

(2) 34 CFR Part 75 (Direct Grant Programs), except 34 CFR 75.128(a)(2) and 75.129(a) in the case of applications for cooperative arrangements.

(3) 34 CFR Part 77 (Definitions that Apply to Department Regulations).

(4) 34 CFR Part 79 (Intergovernmental Review of Department of Education Programs and Activities).

(5) 34 CFR Part 82 (New Restrictions on Lobbying).

(6) 34 CFR Part 85 (Governmentwide Debarment and Suspension (Nonprocurement) and Governmentwide Requirements for Drug-Free Workplace (Grants)).

(7) 34 CFR Part 86 (Drug-Free Schools and Campuses).

(b) The regulations in this Part 607.

(Authority: 20 U.S.C. 1057)

6. Section 607.7 is amended by removing the word "Project" from the list in paragraph (a) and by removing the definition of "Strengthening Program," adding new definitions of "Educationally disadvantaged," "Minority student," and "Underrepresented" in alphabetical order, and revising the definition of "Activity" in paragraph (b) to read as follows:

§ 607.7 What definitions apply?

* * * * *

(b) * * *

Activity means an action that is incorporated into an implementation plan designed to meet one or more objectives. An activity is a part of a project and has its own budget that is approved to carry out the objectives of that subpart.

* * * * *

Educationally disadvantaged means a college student who requires special services and assistance to enable them to succeed in higher education. The phrase includes, but is not limited to, students who come from—

(1) Economically disadvantaged families;

(2) Limited English proficiency families;

(3) Migrant worker families; or

(4) Families in which one or both of their parents have dropped out of secondary school.

* * * * *

Minority student means a student who is Alaskan Native, American Indian, Asian-American, Black (African-American), Hispanic American, Native Hawaiian, or Pacific Islander.

* * * * *

Underrepresented means proportionate representation as measured by degree recipients, that is less than the proportionate

representation in the general population—

(1) As indicated by—

(i) The most current edition of the Department's *Digest of Educational Statistics;*

(ii) The National Research Council's *Doctorate Recipients from United States Universities;* or

(iii) Other standard statistical references, as announced annually in the **Federal Register** notice inviting applications for new awards under this program; or

(2) As documented by national survey data submitted to and accepted by the Secretary on a case-by-case basis.

* * * * *

7. Section 607.8 is revised to read as follows:

§ 607.8 What is a comprehensive development plan and what must it contain?

(a) A comprehensive development plan is an institution's strategy for achieving growth and self-sufficiency by strengthening its—

(1) Academic programs;

(2) Institutional management; and

(3) Fiscal stability.

(b) The comprehensive development plan must include the following:

(1) An analysis of the strengths, weaknesses, and significant problems of the institution's academic programs, institutional management, and fiscal stability.

(2) A delineation of the institution's goals for its academic programs, institutional management, and fiscal stability, based on the outcomes of the analysis described in paragraph (b)(1) of this section.

(3) Measurable objectives related to reaching each goal and timeframes for achieving the objectives.

(4) Methods and resources that will be used to institutionalize practices and improvements developed under the proposed project.

(Authority: 20 U.S.C. 1066)

8. Section 607.9 is amended by revising paragraph (a)(3) to read as follows:

§ 607.9 What are the type, duration, and limitations in the awarding of grants under this part?

* * * * *

(a) * * *

(3) Either type of development grant may be awarded for a period of five years.

* * * * *

9. Section 607.10 is amended by revising paragraphs (b) and (c) to read as follows:

§ 607.10 What activities may and may not be carried out under a grant?

* * * * *

(b) *Development grants—allowable activities.* Under a development grant, except as provided in paragraph (c) of this section, a grantee shall carry out activities that implement its comprehensive development plan and hold promise for strengthening the institution. Activities that may be carried out include, but are not limited to—

(1) Faculty development that provides faculty with the skills and knowledge needed to—

(i) Develop academic support services, including advising and mentoring students;

(ii) Develop academic programs or methodology, including computer-assisted instruction, that strengthen the academic quality of the institution; or

(iii) Acquire terminal degrees that are required to obtain or retain accreditation of an academic program or department;

(2) Funds and administrative management that will improve the institution's ability to—

(i) Manage financial resources in an efficient and effective manner; and

(ii) Collect, access, and use information about the institution's operations for improved decisionmaking;

(3) Developing and improving academic programs that enable the institution to—

(i) Develop new academic programs or new program options that show promise for increased student enrollment;

(ii) Provide new technology or methodology to increase student success and retention or to retain accreditation; or

(iii) Improve curriculum or methodology for existing academic programs to stabilize or increase student enrollment;

(4) Acquiring equipment for use in strengthening management and academic programs to achieve objectives such as those described in paragraphs (b)(2) and (b)(3) of this section;

(5) Establishing or increasing the joint use of facilities such as libraries and laboratories to—

(i) Eliminate the distance and high cost associated with providing academic programs and academic support; or

(ii) Provide clinical experience that is part of an approved academic program at off-campus locations; or

(6) Developing or improving student services to provide—

(i) New or improved methods to deliver student services, including counseling, tutoring, and instruction in basic skills; or

(ii) Improved strategies to train student services personnel.

(7) Payment of any portion of the salary of a dean, with proper justification, to fill a position under the project such as project coordinator or activity director. For purposes of this paragraph, proper justification includes evidence that the position entitled "Dean" is not one that has college-wide administrative authority and responsibility.

(c) *Development grants—unallowable activities.* A grantee may not carry out the following activities or pay the following costs under a development grant:

(1) Activities that are not included in the grantee's approved application.

(2) Activities that are inconsistent with any State plan for higher education that is applicable to the institution, including, but not limited to, a State plan for desegregation of higher education.

(3) Activities or services that relate to sectarian instruction or religious worship.

(4) Activities provided by a school or department of divinity. For the purpose of this provision, a "school or department of divinity" means an institution, or a department of an institution, whose program is specifically for the education of students to prepare them to become ministers of religion or to enter into some other religious vocation or to prepare them to teach theological subjects.

(5) Developing or improving non-degree or non-credit courses other than basic skills development courses.

(6) Developing or improving community-based or community services programs, unless the program provides academic-related experiences or academic credit toward a degree for degree students.

(7) Purchase of standard office equipment, such as furniture, file cabinets, bookcases, typewriters, or word processors.

(8) Payment of any portion of the salary of a president, vice president, or equivalent officer who has college-wide administrative authority and responsibility at an institution to fill a position under the grant such as project coordinator or activity director.

(9) Costs of organized fund-raising, including financial campaigns, endowment drives, solicitation of gifts and bequests, and similar expenses incurred solely to raise capital or obtain contributions.

(10) Costs of student recruitment such as advertisements, literature, and college fairs.

(11) Services to high school students.

(12) Instruction in the institution's standard courses as indicated in the institution's catalog.

(13) Costs for health and fitness programs, transportation, and day care services.

(14) Student activities such as entertainment, cultural, or social enrichment programs, publications, social clubs, or associations.

(15) Activities that are operational in nature rather than developmental in nature.

(Authority: 20 U.S.C. 1057, 1069c)

10. Section 607.11 is amended by revising paragraph (c) to read as follows:

§ 607.11 What must be included in individual development grant applications?

* * * * *

(c) A description of any activities that were funded under previous development grants awarded under the Strengthening Institutions of Special Needs Program that expired within five years of when the development grant will begin and the institution's justification for not completing the activities under the previous grant;

* * * * *

11. Section 607.12 is amended by adding a new paragraph (b)(4) to read as follows:

§ 607.12 What must be included in cooperative arrangement grant applications?

* * * * *

(b) * * *

(4) The name of the applicant for the group that is legally responsible for—

(i) The use of all grant funds; and

(ii) Ensuring that the project is carried out by the group in accordance with Federal requirements.

* * * * *

12. Section 607.13 is revised to read as follows:

§ 607.13 How many applications for a development grant may an institution submit?

In any fiscal year, an institution of higher education may—

(a) Submit an application for an individual development grant; and

(b) Be part of a cooperative arrangement application.

(Authority: 20 U.S.C. 1057, 1069)

13. Section 607.20 is revised to read as follows:

§ 607.20 How does the Secretary choose applications for funding?

(a) The Secretary evaluates an application on the basis of the criteria in—

(1) Sections 607.21 and 607.23 for a planning grant; and

(2) Sections 607.22, 607.23, and 607.25 for a development grant.

(b) (1) With regard to applicants that satisfy the requirements of paragraph (d) of this section, for each fiscal year, the Secretary awards development grants to applicants that are not, or were not, grantees under this part during the fiscal year, before the Secretary awards a development grant to any applicant that is or was a grantee under this part during the fiscal year.

(2) For purposes of paragraph (b)(1) of this section, an institution that is a recipient of a cooperative arrangement grant is not a grantee under this part.

(c) (1) The Secretary awards up to 100 points for the criteria in § 607.21 and up to 100 points for the criteria in § 607.22.

(2) The maximum possible score for each complete criterion is in parentheses.

(d) (1) The Secretary considers funding an application for a planning grant that scores at least 50 points under § 607.21.

(2) The Secretary considers funding an application for a development grant that—

(i) Scores at least 50 points under § 607.22;

(ii) Is submitted with a comprehensive development plan that satisfies all the elements required of such a plan under § 607.8; and

(iii) In the case of an application for a cooperative arrangement grant, demonstrates that the grant will enable each eligible participant to meet the goals and objectives of its comprehensive development plan better and at a lower cost than if each eligible participant were funded individually.

(Authority: 20 U.S.C. 1057–1059, 1066–1069f)

14. Section 607.22 is revised to read as follows:

§ 607.22 What are the selection criteria for development grants?

The Secretary uses the following criteria to evaluate applications for development grants:

(a) *Quality of the applicant's comprehensive development plan.* (Total: 30 points) The extent to which—

(1) The strengths, weaknesses, and significant problems of the institution's academic programs, institutional management, and fiscal stability are clearly and comprehensively analyzed and result from a process that involved major constituencies of the institution. (12 points);

(2) The goals for the institution's academic programs, institutional management, and fiscal stability are realistic and based on comprehensive analysis. (5 points);

(3) The objectives stated in the plan are measurable, related to institutional goals, and, if achieved, will contribute to the growth and self-sufficiency of the institution (5 points);

(4) The plan clearly and comprehensively describes the methods and resources the institution will use to institutionalize practice and improvements developed under the proposed project, including, in particular, how operational costs for personnel, maintenance, and upgrades of equipment will be paid with institutional resources (8 points).

(b) *Quality of activity objectives.* (Total: 10 points) The extent to which the objectives for each activity are—

(1) Realistic and defined in terms of measurable results (5 points); and

(2) Directly related to the problems to be solved and to the goals of the comprehensive development plan (5 points).

(c) *Quality of implementation strategy.* (Total: 25 points) The extent to which—

(1) The implementation strategy for each activity is comprehensive (10 points);

(2) The rationale for the implementation strategy for each activity is clearly described and is supported by the results of relevant studies or projects (10 points); and

(3) The timetable for each activity is realistic and likely to be attained (5 points).

(d) *Quality of key personnel.* (Total: 10 points) The extent to which—

(1) The past experience and training of key professional personnel are directly related to the stated activity objectives (7 points); and

(2) The time commitment of key personnel is realistic (3 points).

(e) *Quality of project management plan.* (Total: 10 points) The extent to which—

(1) Procedures for managing the project are likely to ensure efficient and effective project implementation (5 points); and

(2) The project coordinator and activity directors have sufficient authority to conduct the project effectively, including access to the president or chief executive officer (5 points).

(f) *Quality of evaluation plan.* (Total: 10 points) The extent to which—

(1) The data elements and the data collection procedures are clearly described and appropriate to measure the attainment of activity objectives and to measure the success of the project in

achieving the goals of the comprehensive development plan (5 points); and

(2) The data analysis procedures are clearly described and are likely to produce formative and summative results on attaining activity objectives and measuring the success of the project on achieving the goals of the comprehensive development plan (5 points).

(g) *Budget.* (Total: 5 points) The extent to which the proposed costs are necessary and reasonable in relation to the project's objectives and scope.

(Approved by the Office of Management and Budget under control number 1840–0114)

(Authority: 20 U.S.C. 1057–1059, 1066–1069f)

15. Section 607.23 is amended by removing paragraph (c), and redesignating paragraphs (d) and (e) as paragraphs (c) and (d), respectively.

16. A new § 607.24 is added to Subpart C to read as follows:

§ 607.24 How does the Secretary use an applicant's performance under a previous development grant when awarding a development grant?

(a) (1) In addition to evaluating an application under the selection criteria in § 607.22, the Secretary evaluates an applicant's performance under any previous development grant awarded under Strengthening Institutions and Special Needs Programs that expired within five years of the year when the development grant will begin.

(2) The Secretary evaluates whether the applicant fulfilled, or is making substantial progress toward fulfilling, the goals and objectives of the previous grant, including, but not limited to, the applicant's success in institutionalizing practices developed and improvements made under the grant.

(3) The Secretary bases the evaluation of the applicant's performance on information contained in—

(i) Performance and evaluation reports submitted by the applicant;

(ii) Audit reports submitted on behalf of the applicant; and

(iii) Other information obtained by the Secretary, including reports prepared by the Department.

(b) If the Secretary initially determines that the applicant did not fulfill the goals and objectives of a previous grant or is not making substantial progress towards fulfilling those goals and objectives, the Secretary affords the applicant the opportunity to respond to that initial determination.

(c) If the Secretary determines that the applicant did not fulfill the goals and objectives of a previous grant or is not making substantial progress towards fulfilling those goals and objectives, the Secretary may—

(1) Decide not to fund the applicant; or

(2) Fund the applicant but impose special grant terms and conditions, such as specific reporting and monitoring requirements.

(Authority: 20 U.S.C. 1066)

17. A new § 607.25 is added to Subpart C to read as follows:

§ 607.25 What priority does the Secretary use in awarding cooperative arrangement grants?

Among applications for cooperative arrangement grants, the Secretary gives priority to proposed cooperative arrangements that are geographically and economically sound, or will benefit the institutions applying for the grant.

(Authority: 20 U.S.C. 1057, 1069)

18. Section 607.31 is revised to read as follows:

§ 607.31 How does a grantee maintain its eligibility?

(a) A grantee shall maintain its eligibility under the requirements in § 607.2, except for § 607.2(a) (1) and (2), for the duration of the grant period.

(b) The Secretary reviews an institution's application for a continuation award to ensure that—

(1) The institution continues to meet the eligibility requirements described in paragraph (a) of this section; and

(2) The institution is making substantial progress toward achieving the objectives set forth in its grant application including, if applicable, the institution's success in institutionalizing practices and improvements developed under the grant.

(Authority: 20 U.S.C. 1057–1059b, 1066–1069f)

[FR Doc. 94–19869 Filed 8–12–94; 8:45 am]

BILLING CODE 4000–01–M

federal register

Monday
August 15, 1994

Part VII

Department of Education

Safe Schools Grants Program, Inviting Applicants for New Awards for Fiscal Year 1995; Notice

DEPARTMENT OF EDUCATION

[CFDA No.: 84.277A]

Safe Schools Grants Program; Notice Inviting Applications for New Awards for Fiscal Year (FY) 1995

Note to Applicants: This notice is a complete application package. Together with the statute authorizing the program and applicable regulations governing the program, including the Education Department General Administrative Regulations (EDGAR), the notice contains all of the information, application forms, and instructions needed to apply for a grant under this competition.

Purpose of Program: To help local school systems ensure that all schools are safe and free of violence consistent with the National Education Goal, which provides that by the year 2000, every school in America will be free of drugs and violence and will offer a disciplined environment conducive to learning.

Eligible Applicants: Local educational agencies (LEAs) that show a significant need for additional funds to prevent and eliminate violence, school crime, and victimization of youth by violence, crime, or other forms of abuse.

To be eligible to receive a grant under this program, an LEA must demonstrate in its application that it—

(a) Serves an area with a high rate of—

(1) Homicides committed by persons between the ages of 5 to 18, inclusive;

(2) Referrals of youth to juvenile court;

(3) Youth under the supervision of the courts;

(4) Expulsions and suspensions of students from school;

(5) Referrals of youth, for disciplinary reasons, to alternative schools; or

(6) Victimization of youth by violence, crime, or other forms of abuse; and

(b) Has serious school crime, violence, and discipline problems, as indicated by other appropriate data.

Deadline for Transmittal of Applications: September 30, 1994.

Deadline for Intergovernmental Review: November 29, 1994.

Available Funds: $18,000,000.

Estimated Range of Awards: The Department expects that grants will range from $300,000 to $1,000,000. No grant under this program will exceed $3,000,000.

Estimated Average Size of Awards: $500,000.

Estimated Number of Awards: 36.

NOTE: Department is not bound by any estimates in this notice.

Project Period: Up to 18 months.

Applicable Regulations: (a) The Education Department General Administrative Regulations (EDGAR) as follows:

(1) 34 CFR Part 75 (Direct Grant Programs).

(2) 34 CFR Part 77 (Definitions that Apply to Department Regulations).

(3) 34 CFR Part 79 (Intergovernmental Review of Department of Education Programs and Activities).

(4) 34 CFR Part 80 (Uniform Administrative Requirements for Grants and Cooperative Agreements to State and Local Governments).

(5) 34 CFR Part 81 (General Education Provisions Act—Enforcement).

(6) 34 CFR Part 82 (New Restrictions on Lobbying).

(7) 34 CFR Part 85 (Governmentwide Debarment and Suspension (Nonprocurement) and Governmentwide Requirements for Drug-Free Workplace (Grants)).

(8) 34 CFR Part 86 (Drug-Free Schools and Campuses).

(b) The regulations for Student Rights in Research, Experimental Programs, and Testing in 34 CFR Part 98.

(c) The regulations for Family Educational Rights and Privacy in 34 CFR Part 99.

Description of Program

An LEA must use grant funds received under this program for one or more of the following activities:

(1) Identifying and assessing school violence and discipline problems, including coordinating needs assessment activities with education, law enforcement, judicial, health, social service, and other appropriate agencies and organizations, juvenile justice programs, and gang prevention activities.

(2) Conducting school safety reviews or violence prevention reviews of programs, policies, practices, and facilities to determine what changes are needed to reduce or prevent violence and promote safety and discipline.

(3) Planning for comprehensive, long-term strategies and preventing school violence and discipline problems through the involvement and coordination of school programs with other education, law enforcement, judicial, health, social service, and other appropriate agencies and organizations

(4) Training school personnel in programs of demonstrated effectiveness in addressing violence, including violence prevention, conflict resolution, anger management, peer mediation, and identification of high-risk youth.

(5) Activities that involve parents in efforts to promote school safety and prevent school violence.

(6) Community education programs, including video and technology-based projects, informing parents, businesses, local government, the media and other appropriate entities about—

(A) The LEA's plan to promote school safety and reduce and prevent school violence and discipline problems; and

(B) The need for community support.

(7) Coordination of school-based activities designed to promote school safety and reduce or prevent school violence and discipline problems with related efforts of education, law enforcement, judicial, health, social service, and other appropriate agencies and organizations and juvenile justice programs.

(8) Developing and implementing violence prevention activities and materials, including—

(A) Conflict resolution and social skills development for students, teachers, aides, other school personnel, and parents;

(B) Disciplinary alternatives to expulsion and suspension of students who exhibit violent or antisocial behavior;

(C) Student-led activities such as peer mediation, peer counseling, and student courts; or

(D) Alternative after-school programs that provide safe havens for students, which may include cultural, recreational, educational, and instructional activities, and mentoring and community service programs.

(9) Educating students and parents regarding the dangers of guns and other weapons and the consequences of their use.

(10) Developing and implementing innovative curricula to prevent violence in schools and training staff how to stop disruptive or violent behavior if such behaviors occurs.

(11) Supporting "safe zones of passage" for students between home and school through such measures as drug- and weapon-free school zones, enhanced law enforcement, and neighborhood patrols.

(12) Counseling programs for victims and witnesses of school violence and crime.

(13) Acquiring and installing metal detectors and hiring security personnel.

(14) Reimbursing law enforcement authorities for their personnel who participate in school violence prevention activities.

(15) Evaluating projects and activities assisted under this program.

(16) The cost of administering projects or activities assisted under this program.

(17) Other projects or activities that meet the purpose of this program.

Limitations

An LEA may not use more than—

(1) A total of five percent of grant funds received under this program for activities described in paragraphs (11), (13), and (14) above; and

(2) Five percent of grant funds received to cover the cost of administering projects or activities assisted under this program.

An LEA shall only be able to use grant funds received under this program for activities described in paragraphs (11), (13), and (14) above, if funding for such activities is not available from other Federal sources.

An LEA may not use grant funds received under this program for construction.

Applications

In order to receive a grant under this program, an eligible LEA shall submit to the Secretary an application that includes—

(1) An assessment of the current violence and crime problems in the schools to be served by the grant and in the community to be served by the applicant;

(2) An assurance that the applicant has written policies regarding school safety, student discipline, and the appropriate handling of violent or disruptive acts;

(3) A description of the schools and communities to be served by the grant, the activities and projects to be carried out with grant funds, and how these activities and projects will help to reduce the current violence and crime problems in the schools and communities served;

(4) A description of educational materials to be developed in the first most predominant non-English language of the schools and communities to be served by the grant, if applicable;

(5) If the LEA receives Federal education funds, an explanation of how activities assisted under this program will be coordinated with and support any systemic education improvement plan prepared with those funds;

(6) The applicant's plan to establish school-level advisory committees, which include faculty, parents, staff and students, for each school to be served by the grant and a description of how each committee will assist in assessing that school's violence and discipline problems as well as in designing appropriate programs, policies, and practices to combat such problems;

(7) The applicant's plan for collecting baseline and future data, by individual schools, to monitor violence and discipline problems and to measure the applicant's progress in achieving the purpose of this program;

(8) A description of how, in subsequent fiscal years, the grantee will integrate the violence prevention activities the grantee carries out with funds under this program with activities carried out under the grantee's comprehensive plan for drug and violence prevention adopted under the Drug-Free Schools and Communities Act of 1986;

(9) A description of how the grantee will coordinate the grantee's school crime and violence prevention efforts with education, law enforcement, judicial, health, and social service programs supported under the Juvenile Justice and Delinquency Prevention Act of 1974, and other appropriate agencies and organizations serving the community;

(10) A description of how the grantee will inform parents about the extent of crime and violence in their children's schools and maximize the participation of parents in the grantee's violence prevention activities;

(11) An assurance that grant funds under this program will be used to supplement and not supplant State and local funds that would, in the absence of funds under this program, be made available by the applicant for the purposes of the grant; and

(12) An assurance that the applicant shall submit, within 90 days of the expiration of the grant, an evaluation of the grantee's progress in achieving the objectives in its approved application; the effectiveness of the project in meeting the purposes of the program; the effect of the project on participants being served by the grantee; and that the applicant will cooperate with, and provide assistance to, the Secretary in gathering statistics and other data that the Secretary determines are necessary to determine the effectiveness of projects and activities assisted under this program or the extent of school violence and discipline problems throughout the Nation.

Competitive Preference

Under 34 CFR 75.105(c)(2)(i) and section 703(b) of the Safe Schools Act of 1994, the Secretary gives preference to applications that meet the following competitive priority. The Secretary awards up to 15 points to an application that meets this competitive priority in a particularly effective way. These points are in addition to any points the application earns under the selection criteria for the program:

Strength of Local Commitment

The Secretary shall give priority to applications for projects that ensure a strong local commitment to the activities assisted under this program, as evidenced by project components, such as—

(1) The formation of a partnership among the applicant and one or more of the following: a community-based organization, a nonprofit organization with a demonstrated commitment to or expertise in developing education programs or providing educational services to students or the public, a local law enforcement agency, or any combination thereof; and

(2) A high level of youth participation in the projects or activities.

Invitational Priority

The Secretary is particularly interested in applications that meet the following invitational priority However, under 34 CFR 105(c)(1) an application that meets this invitational priority does not receive competitive or absolute preference over other applications:

Projects that use a comprehensive approach to implement or expand a violence prevention program. Such a program should include conducting a needs assessment, involving students and parents, implementing curricula, training staff, and coordinating school-based activities with related efforts in the community

Selection Criteria

(a)(1) The Secretary uses the following selection criteria to evaluate applications for new grants under this competition.

(2) The maximum score for all of these criteria is 100 points.

(3) The maximum score for each criterion is indicated in parentheses.

The Secretary assigns the 15 points reserved in 34 CFR 75.210(c), as follows 10 points to selection criterion 34 CFR 75.210(b)(3) (Plan of Operation) for a possible total of 25 points); 3 points to selection criterion 34 CFR 75.210(b)(4) (Quality of key personnel) for a possible total of 10 points; and 2 points to selection criterion 34 CFR 75.210(b)(6) (Evaluation plan) for a possible total of 7 points.

(b) *The criteria.*—(1) *Meeting the purposes of the authorizing statute.* (30 points) The Secretary reviews each application to determine how well the project will meet the purpose of the Safe Schools Act of 1994, including consideration of—

(i) The objectives of the project; and

(ii) How the objectives of the project further the purposes of the Safe Schools Act of 1994.

(2) *Extent of need for the project.* (20 points) The Secretary reviews each application to determine the extent to which the project meets specific needs recognized in the Safe Schools Act of 1994, including consideration of—

(i) The needs addressed by the project;

(ii) How the applicant identified those needs;

(iii) How those needs will be met by the project; and

(iv) The benefits to be gained by meeting those needs.

(3) *Plan of operation.* (25 points) The Secretary reviews each application to determine the quality of the plan of operation for the project, including—

(i) The quality of the design of the project;

(ii) The extent to which the plan of management is effective and ensures proper and efficient administration of the project;

(iii) How well the objectives of the project relate to the purpose of the program;

(iv) The quality of the applicant's plan to use its resources and personnel to achieve each objective;

(v) How the applicant will ensure that project participants who are otherwise eligible to participate are selected without regard to race, color, national origin, gender, age, or handicapping condition; and

(vi) For grants under a program that requires the applicant to provide an opportunity for participation of students enrolled in private schools, the quality of the applicant's plan to provide that opportunity.

(4) *Quality of key personnel.* (10 points)

(i) The Secretary reviews each application to determine the quality of key personnel the applicant plans to use on the project, including—

(A) The qualifications of the project director (if one is to be used);

(B) The qualifications of each of the other key personnel to be used in the project;

(C) The time that each person referred to in paragraphs (b)(4)(i) (A) and (B) will commit to the project; and

(D) How the applicant, as part of its nondiscriminatory employment practices, will ensure that its personnel are selected for employment without regard to race, color, national origin, gender, age, or handicapping condition.

(ii) To determine personnel qualifications under paragraphs (b)(4)(i) (A) and (B), the Secretary considers—

(A) Experience and training in fields related to the objectives of the project; and

(B) Any other qualifications that pertain to the quality of the project.

(5) *Budget and cost effectiveness.* (5 points) The Secretary reviews each application to determine the extent to which—

(i) The budget is adequate to support the project; and (ii) Costs are reasonable in relation to the objectives of the project.

(6) *Evaluation plan.* (7 points) The Secretary reviews each application to determine the quality of the evaluation plan for the project, including the extent to which the applicant's methods of evaluation—

(i) Are appropriate to the project; and

(ii) To the extent possible, are objective and produce data that are quantifiable.

(Cross-reference: See 34 CFR 75.590 Evaluation by the grantee.)

(7) *Adequacy of resources.* (3 points) The Secretary reviews each application to determine the adequacy of the resources that the applicant plans to devote to the project, including facilities, equipment, and supplies.

Intergovernmental Review of Federal Programs

This program is subject to the requirements of Executive Order 12372 (Intergovernmental Review of Federal Programs) and the regulations in 34 CFR Part 79.

The objective of the Executive order is to foster an intergovernmental partnership and to strengthen federalism by relying on State and local processes for State and local government coordination and review of proposed Federal financial assistance.

Applicants must contact the appropriate State Single Point of Contact to find out about, and to comply with, the State's process under Executive Order 12372. Applicants proposing to perform activities in more than one State should immediately contact the Single Point of Contact for each of those States and follow the procedure established in each State under the Executive order. If you want to know the name and address of any State Single Point of Contact, see the list published in the **Federal Register** on May 3, 1994 (59 FR 22904–22905).

In States that have not established a process or chosen a program for review, State, areawide, regional, and local entities may submit comments directly to the Department.

Any State Process Recommendation and other comments submitted by a State Single Point of Contact and any comments from State, areawide, regional, and local entities must be mailed or hand-delivered by the date indicated in this notice to the following address: The Secretary, E.O. 12372—CFDA # 84.277A, U.S. Department of Education, Room 4161, 400 Maryland Avenue, SW., Washington, DC 20202–0125.

Proof of mailing will be determined on the same basis as applications (see 34 CFR 75.102). Recommendations or comments may be hand-delivered until 4:30 p.m. (Washington, DC time) on the date indicated in this notice.

PLEASE NOTE THAT THE ABOVE ADDRESS IS NOT THE SAME ADDRESS AS THE ONE TO WHICH THE APPLICANT SUBMITS ITS COMPLETED APPLICATION. *DO NOT SEND APPLICATIONS TO THE ABOVE ADDRESS. INSTRUCTIONS FOR TRANSMITTAL OF APPLICATIONS:*

(a) If an applicant wants to apply for a grant, the applicant shall—

(1) Mail the original and two copies of the application on or before the deadline date to: U. S. Department of Education, Application Control Center, Attention: (CFDA # 84.277A, Washington, DC 20202–4725.

or

(2) Hand-deliver the original and two copies of the application by 4:30 p.m. (Washington, DC time) on the deadline date to: U.S. Department of Education, Application Control Center, Attention: (CFDA# 84.277A), Room #3633, Regional Office Building #3, 7th and D Streets, SW., Washington, DC.

(b) An applicant must show one of the following as proof of mailing:

(1) A legibly dated U.S. Postal Service postmark.

(2) A legible mail receipt with the date of mailing stamped by the U.S. Postal Service.

(3) A dated shipping label, invoice, or receipt from a commercial carrier.

(4) Any other proof of mailing acceptable to the Secretary.

(c) If an application is mailed through the U.S. Postal Service, the Secretary does not accept either of the following as proof of mailing:

(1) A private metered postmark.

(2) A mail receipt that is not dated by the U.S. Postal Service.

Note: (1) The U.S. Postal Service does not uniformly provide a dated postmark. Before relying on this method, an applicant should check with its local post office.

(2) The Application Control Center will mail a Grant Application Receipt Acknowledgment to each applicant. If an applicant fails to receive the notification of application receipt within 15 days from the date of mailing

the application, the applicant should call the U.S. Department of Education Application Control Center at (202) 708–9494.

(3) The applicant *must* indicate on the envelope and—if not provided by the Department—in Item 10 of the Application for Federal Assistance (Standard Form 424) the CFDA number (and suffix letter, if any) of the competition under which the application is being submitted. The CFDA number for this competition is 84.277A.

Application Instructions and Forms

The appendix to this application is divided into three parts plus a statement regarding estimated public reporting burden and various assurances and certifications. These parts and additional materials are organized in the same manner that the submitted application should be organized. The parts and additional materials are as follows:

Part I: Application for Federal Assistance (Standard Form 424 (Rev. 4–88)) and instructions.

PART II: Budget Information—Non-Construction Programs (Standard Form 424A) and instructions.

PART III: Application Narrative.

ADDITIONAL MATERIALS:

Estimated Public Reporting Burden.

Assurances—Non-Construction Programs (Standard Form 424B).

Certifications regarding Lobbying; Debarment, Suspension, and Other Responsibility Matters; and Drug-Free Workplace Requirements (ED 80–0013).

Certification regarding Debarment, Suspension, Ineligibility and Voluntary Exclusion: Lower Tier Covered Transactions (ED 80–0014, 9/90) and instructions. (NOTE: ED 80–0014 is intended for the use of grantees and should not be transmitted to the Department.)

Disclosure of Lobbying Activities (Standard Form LLL) (if applicable) and instructions; and Disclosure of Lobbying Activities Continuation Sheet (Standard Form LLL–A).

An applicant may submit information on a photostatic copy of the application and budget forms, the assurances, and the certifications. However, the application form, the assurances, and the certifications must each have an original signature. No grant may be awarded unless a completed application form has been received.

FOR FURTHER INFORMATION CONTACT: Albert Macias, Division of Drug-Free Schools and Communities, School Improvement Programs, U.S. Department of Education, 400 Maryland Ave., S.W., Portals Room 4500, Washington, D.C. 20202–6439, (202) 260–2844. Individuals who use a telecommunications device for the deaf (TDD) may call the Federal Information Relay Service (FIRS) at 1–800–877–8339 between 8 a.m. and 8 p.m., Eastern time, Monday through Friday.

Information about the Department's funding opportunities, including copies of application notices for discretionary grant competitions, can be viewed on the Department's electronic bulletin board (ED Board), telephone (202) 260–9950; or on the Internet Gopher Server at GOPHER.ED.GOV (under Announcements, Bulletins, and Press Releases). However, the official application notice for a discretionary grant competition is the notice published in the **Federal Register**.

Program Authority: 20 USC 5961–5965; 5967.

Dated: August 8, 1994.

Thomas W. Payzant,

Assistant Secretary, Elementary and Secondary Education.

BILLING CODE 4000–01–P

OMB Approval No. 0348-0043

APPLICATION FOR FEDERAL ASSISTANCE

2. DATE SUBMITTED	Applicant Identifier	
3. DATE RECEIVED BY STATE	State Application Identifier	
4. DATE RECEIVED BY FEDERAL AGENCY	Federal Identifier	

1. TYPE OF SUBMISSION:

Application	Preapplication
☐ Construction	☐ Construction
☒ Non-Construction	☐ Non-Construction

5. APPLICANT INFORMATION

Legal Name:

Organizational Unit:

Address (give city, county, state, and zip code):

Name and telephone number of the person to be contacted on matters involving this application (give area code)

6. EMPLOYER IDENTIFICATION NUMBER (EIN): ☐☐ – ☐☐☐☐☐☐☐

7. TYPE OF APPLICANT: (enter appropriate letter in box) ☐

A. State
B. County
C. Municipal
D. Township
E. Interstate
F. Intermunicipal
G. Special District
H. Independent School Dist.
I. State Controlled Institution of Higher Learning
J. Private University
K. Indian Tribe
L. Individual
M. Profit Organization
N. Other (Specify) _____

8. TYPE OF APPLICATION:

☒ New ☐ Continuation ☐ Revision

If Revision, enter appropriate letter(s) in box(es): ☐ ☐

A. Increase Award B. Decrease Award C. Increase Duration
D. Decrease Duration Other (specify):

9. NAME OF FEDERAL AGENCY:
U.S. Department of Education

10. CATALOG OF FEDERAL DOMESTIC ASSISTANCE NUMBER: 8 4 . 2 7 7A

TITLE: SAFE SCHOOLS GRANTS PROGRAM

11. DESCRIPTIVE TITLE OF APPLICANT'S PROJECT:

12. AREAS AFFECTED BY PROJECT (cities, counties, states, etc.):

13. PROPOSED PROJECT:

Start Date	Ending Date

14. CONGRESSIONAL DISTRICTS OF:

a. Applicant

b. Project

15. ESTIMATED FUNDING:

a. Federal	$	.00
b. Applicant	$	.00
c. State	$	.00
d. Local	$	.00
e. Other	$	.00
f. Program Income	$	.00
g. TOTAL	$	.00

16. IS APPLICATION SUBJECT TO REVIEW BY STATE EXECUTIVE ORDER 12372 PROCESS?

a. YES THIS PREAPPLICATION/APPLICATION WAS MADE AVAILABLE TO THE STATE EXECUTIVE ORDER 12372 PROCESS FOR REVIEW ON

DATE _____

b. NO. ☐ PROGRAM IS NOT COVERED BY E.O. 12372

☐ OR PROGRAM HAS NOT BEEN SELECTED BY STATE FOR REVIEW

17. IS THE APPLICANT DELINQUENT ON ANY FEDERAL DEBT?

☐ Yes If "Yes," attach an explanation. ☐ No

18. TO THE BEST OF MY KNOWLEDGE AND BELIEF ALL DATA IN THIS APPLICATION/PREAPPLICATION ARE TRUE AND CORRECT, THE DOCUMENT HAS BEEN DULY AUTHORIZED BY THE GOVERNING BODY OF THE APPLICANT AND THE APPLICANT WILL COMPLY WITH THE ATTACHED ASSURANCES IF THE ASSISTANCE IS AWARDED

a. Typed Name of Authorized Representative	b. Title	c. Telephone number
d. Signature of Authorized Representative		e. Date Signed

Previous Editions Not Usable

Standard Form 424 (REV 4-88)
Prescribed by OMB Circular A-102

Authorized for Local Reproduction

BILLING CODE 4000-01-C

INSTRUCTIONS FOR THE SF 424

This is a standard form used by applicants as a required facesheet for preapplications and applications submitted for Federal assistance. It will be used by Federal agencies to obtain applicant certification that States which have established a review and comment procedure in response to Executive Order 12372 and have selected the program to be included in their process, have been given an opportunity to review the applicant's submission.

Item and Entry

1. Self-explanatory.

2. Date application submitted to Federal agency (or State if applicable) if applicant's control number (if applicable).

3. State use only (if applicable).

4. If this application is to continue or revise an existing award, enter present Federal identifier number. If for a new project, leave blank.

5. Legal name of applicant, name of primary organizational unit which will undertake the assistance activity, complete address of the applicant, and name and telephone number of the person to contact on matters related to this application.

6. Enter Employer Identification Number (EIN) as assigned by the Internal Revenue Service.

7 Enter the appropriate letter in the space provided.

8. Check appropriate box and enter appropriate letter(s) in the spaces(s) provided:

—"New" means a new assistance award.

—"Continuation" means an extension for an additional funding/budget period for a project with a projected completion date.

—"Revision" means any change in the Federal Government's financial obligation or contingent liability from an existing obligation.

9. Name of Federal agency from which assistance is being requested with this application.

10. Use the Catalog of Federal Domestic Assistance number and title of the program under which assistance is requested.

11. Enter a brief descriptive title of the project. If more than one program is involved, you should append an explanation on a separate sheet. If appropriate (e.g., construction or real property projects), attach a map showing project location. For preapplications, use a separate sheet to provide a summary description of this project.

12. List only the largest political entities affected (e.g., State, counties, cities).

13. Self-explanatory

14. List the applicant's Congressional District and any District(s) affected by the program or project.

15. Amount requested or to be contributed during the first funding/budget period by each contributor. Value of in-kind contributions should be included on appropriate lines as applicable. If the action will result in a dollar change to an existing award, indicate *only* the amount of the change. For decreases, enclose the amounts in parentheses. If both basic and supplemental amounts are included, show breakdown on an attached sheet. For multiple program funding, use totals and show breakdown using same categories as item 15.

16. Applicants should contact the State Single Point of Contact (SPOC) for Federal Executive Order 12372 to determine whether the application is subject to the State intergovernmental review process.

17. This question applies to the applicant organization, not the person who signs as the authorized representative. Categories of debt include delinquent audit disallowances, loans and taxes.

18. To be signed by the authorized representative of the applicant. A copy of the governing body's authorization for you to sign this application as official representative must be on file in the applicant's office. (Certain Federal agencies may require that this authorization be submitted as part of the application.)

BILLING CODE 4000–01–P

BUDGET INFORMATION — Non-Construction Programs

OMB Approval No. 0348-0044

SECTION A – BUDGET SUMMARY

Grant Program Function or Activity (a)	Catalog of Federal Domestic Assistance Number (b)	Estimated Unobligated Funds		New or Revised Budget		
		Federal (c)	Non-Federal (d)	Federal (e)	Non-Federal (f)	Total (g)
1.		$	$	$	$	$
2.						
3.						
4.						
5. TOTALS		$	$	$	$	$

SECTION B – BUDGET CATEGORIES

6 Object Class Categories	GRANT PROGRAM, FUNCTION OR ACTIVITY				Total (5)
	(1)	(2)	(3)	(4)	
a. Personnel	$	$	$	$	$
b. Fringe Benefits					
c. Travel					
d. Equipment					
e. Supplies					
f. Contractual					
g. Construction					
h. Other					
i. Total Direct Charges (sum of 6a - 6h)					
j. Indirect Charges					
k. TOTALS (sum of 6i and 6j)	$	$	$	$	$
7. Program Income	$	$	$	$	$

Authorized for Local Reproduction

Standard Form 424A (4-88)
Prescribed by OMB Circular A-102

BILLING CODE 4000-01-C

SECTION C - NON-FEDERAL RESOURCES

(a) Grant Program	(b) Applicant	(c) State	(d) Other Sources	(e) TOTALS
8.	$	$	$	$
9.				
10.				
11.				
12. TOTALS (sum of lines 8 and 11)	$	$	$	$

SECTION D - FORECASTED CASH NEEDS

	Total for 1st Year	1st Quarter	2nd Quarter	3rd Quarter	4th Quarter
13. Federal	$	$	$	$	$
14. NonFederal					
15. TOTAL (sum of lines 13 and 14)	$	$	$	$	$

SECTION E - BUDGET ESTIMATES OF FEDERAL FUNDS NEEDED FOR BALANCE OF THE PROJECT

(a) Grant Program	FUTURE FUNDING PERIODS (Years)			
	(b) First	(c) Second	(d) Third	(e) Fourth
16.	$	$	$	$
17.				
18.				
19.				
20. TOTALS (sum of lines 16 -19)	$	$	$	$

SECTION F - OTHER BUDGET INFORMATION

(Attach additional Sheets if Necessary)

21. Direct Charges:	22. Indirect Charges:

23. Remarks

SF 424A (4-88) Page 2
Prescribed by OMB Circular A-102

Authorized for Local Reproduction

INSTRUCTIONS FOR THE SF-424A

General Instructions

This form is designed so that application can be made for funds from one or more grant programs. In preparing the budget, adhere to any existing Federal grantor agency guidelines which prescribe how and whether budgeted amounts should be separately shown for different functions or activities within the program. For some programs, grantor agencies may require budgets to be separately shown by function or activity. For other programs, grantor agencies may require a breakdown by function or activity. Sections A, B, C, and D should include budget estimates for the whole project except when applying for assistance which requires Federal authorization in annual or other funding period increments. In the latter case, Sections A, B, C, and D should provide the budget for the first budget period (usually a year) and Section E should present the need for Federal assistance in the subsequent budget periods. All applications should contain a breakdown by the object class categories shown in Lines a–k of Section B.

Section A. Budget Summary Lines 1–4, Columns (a) and (b)

For applications pertaining to a single Federal grant program (Federal Domestic Assistance Catalog number) and not requiring a functional or activity breakdown, enter on Line 1 under Column (a) the catalog program title and the catalog number in Column (b).

For applications pertaining to a single program requiring budget amounts by multiple functions or activities, enter the name of each activity or function on each line in Column (a), and enter the catalog number in Column (b). For applications pertaining to multiple programs where none of the programs require a breakdown by function or activity, enter the catalog program title on each line in Column (a) and the respective catalog number on each line in Column (b).

For applications pertaining to multiple programs where one or more programs require a breakdown by function or activity, prepare a separate sheet for each program requiring the breakdown. Additional sheets should be used when one form does not provide adequate space for all breakdown of data required. However, when more than one sheet is used, the first page should provide the summary totals by programs.

Lines 1–4, Columns (c) through (g.)

For new applications, leave Columns (c) and (d) blank. For each line entry in Columns (a) and (b), enter in Columns (e), (f), and (g) the appropriate amounts of funds needed to support the project for the first funding period (usually a year).

For continuing grant program applications, submit these forms before the end of each funding period as required by the grantor agency. Enter in Columns (c) and (d) the estimated amounts of funds which will remain unobligated at the end of the grant funding period only if the Federal grantor agency instructions provide for this. Otherwise, leave these columns blank. Enter in columns (e) and (f) the amounts of funds needed for the upcoming period. The amount(s) in Column (g) should be the sum of amounts in Columns (e) and (f).

For supplemental grants and change to existing grants, do not use Columns (c) and (d). Enter in Column (e) the amount of the increase or decrease of Federal funds and enter in Column (f) the amount of the increase or decrease of non-Federal funds. In Column (g) enter the new total budgeted amount (Federal and non-Federal) which includes the total previous authorized budgeted amounts plus or minus, as appropriate, the amounts shown in Columns (e) and (f). The amount(s) in Column (g) should not equal the sum of amounts in Columns (e) and (f).

Line 5—Show the totals for all columns used.

Section B Budget Categories

In the column headings (1) through (4), enter the titles of the same programs, functions, and activities shown on Lines 1–4, Column (a), Section A. When additional sheets are prepared for Section A, provide similar column headings on each sheet. For each program, function or activity, fill in the total requirements for funds (both Federal and non-Federal) by object class categories.

Lines 6a–i—Show the totals of Lines 6a to 6h in each column.

Line 6j—Show the amount of indirect cost.

Line 6k—Enter the total of amounts on Lines 6i and 6j. For all applications for new grants and continuation grants the total amount in column (5), Line 6k, should be the same as the total amount shown in Section A, Column (g), Line 5. For supplemental grants and changes to grants, the total amount of the increase or decrease as shown in Columns (1)–(4), Line 6k should be the same as the sum of the amounts in Section A, Columns (e) and (f) on Line 5.

Line 7—Enter the estimated amount of income, if any, expected to be generated from this project. Do not add or subtract this amount from the total project amount. Show under the program narrative statement the nature and source of income. The estimated amount of program income may be considered by the federal grantor agency in determining the total amount of the grant.

Section C. Non-Federal Resources

Lines 8–11—Enter amounts of non-Federal resources that will be used on the grant. If in-kind contributions are included, provide a brief explanation on a separate sheet.

Column (a)—Enter the program titles identical to Column (a), Section A. A breakdown by function or activity is not necessary.

Column (b)—Enter the contribution to be made by the applicant.

Column (c)—Enter the amount of the State's cash and in-kind contribution if the applicant is not a State or State agency. Applicants which are a State or State agencies should leave this column blank.

Column (d)—Enter the amount of cash and in-kind contributions to be made from all other sources.

Column (e)—Enter totals of Columns (b), (c), and (d).

Line 12—Enter the total for each of Columns (b)–(e). The amount in Column (e) should be equal to the amount on Line 5, Column (f), Section A.

Section D. Forecasted Cash Needs

Line 13—Enter the amount of cash needed by quarter from the grantor agency during the first year.

Line 14—Enter the amount of cash from all other sources needed by quarter during the first year.

Line 15—Enter the totals of amounts on Lines 13 and 14.

Section E. Budget Estimates of Federal Funds Needed for Balance of the Project

Lines 16–19—Enter in Column (a) the same grant program titles shown in Column (a), Section A. A breakdown by function or activity is not necessary. For new applications and continuation grant applications, enter in the proper columns amounts of Federal funds which will be needed to complete the program or project over the succeeding funding periods (usually in years). This section need not be completed for revisions (amendments, changes, or supplements) to funds for the current year of existing grants.

If more than four lines are needed to list the program titles, submit additional schedules as necessary.

Line 20—Enter the total for each of the Columns (b)–(e). When additional schedules are prepared for this Section, annotate accordingly and show the overall totals on this line.

Section F. Other Budget Information

Line 21—Use this space to explain amounts for individual direct object-class cost categories that may appear to be out of the ordinary or to explain the details as required by the Federal grantor agency.

Line 22—Enter the type of indirect rate (provisional, predetermined, final or fixed) that will be in effect during the funding period, the estimated amount of the base to which the rate is applied, and the total indirect expense.

Line 23—Provide any other explanations or comments deemed necessary.

Instructions for Part III—Application Narrative

Before preparing the Application Narrative an applicant should read carefully the description of the program, the information regarding priorities, and the selection criteria the Secretary uses to evaluate applications.

The narrative should encompass each function or activity for which funds are being requested and should—

1. Begin with an Abstract; that is, a summary of the proposed project;

2. Describe the proposed project in light of each of the selection criteria in the order in which the criteria are listed in this application package; and

3. Include any other pertinent information that might assist the Secretary in reviewing the application

The Secretary strongly requests the applicant to limit the Application

Narrative to no more than twenty-five (25) double-spaced, typed pages (on one side only) although the Secretary will consider applications of greater length.

Instructions for Estimated Public Reporting Burden

Under terms of the Paperwork Reduction Act of 1980, as amended, and the regulations implementing that Act, the Department of Education invites comment on the public reporting burden in this collection of information. Public reporting burden for this collection of information is estimated to average 28 hours per response, including the time for reviewing instructions, searching existing data sources, gathering and maintaining the data needed, and completing and reviewing the collection of information. You may send comments regarding this burden estimate or any other aspect of this collection of information, including suggestions for reducing this burden, to the U.S. Department of Education, Information Management and Compliance Division, Washington, D.C. 20202–4651; and to the Office of Management and Budget, Paperwork Reduction Project, 1810–0565, Washington, D.C. 20503.

(Information collection approved under OMB control number 1810–0565. Expiration date: 12/95.

BILLING CODE 4000–01–P

Authorized for Local Reproduction

OMB Approval No. 0348-0040

ASSURANCES — NON-CONSTRUCTION PROGRAMS

Note: Certain of these assurances may not be applicable to your project or program. If you have questions, please contact the awarding agency. Further, certain Federal awarding agencies may require applicants to certify to additional assurances. If such is the case, you will be notified.

As the duly authorized representative of the applicant I certify that the applicant:

1. Has the legal authority to apply for Federal assistance, and the institutional, managerial and financial capability (including funds sufficient to pay the non-Federal share of project costs) to ensure proper planning, management and completion of the project described in this application.

2. Will give the awarding agency, the Comptroller General of the United States, and if appropriate, the State, through any authorized representative, access to and the right to examine all records, books, papers, or documents related to the award; and will establish a proper accounting system in accordance with generally accepted accounting standards or agency directives.

3. Will establish safeguards to prohibit employees from using their positions for a purpose that constitutes or presents the appearance of personal or organizational conflict of interest, or personal gain.

4. Will initiate and complete the work within the applicable time frame after receipt of approval of the awarding agency.

5. Will comply with the Intergovernmental Personnel Act of 1970 (42 U.S.C. §§ 4728-4763) relating to prescribed standards for merit systems for programs funded under one of the nineteen statutes or regulations specified in Appendix A of OPM's Standards for a Merit System of Personnel Administration (5 C.F.R. 900, Subpart F).

6. Will comply with all Federal statutes relating to nondiscrimination. These include but are not limited to: (a) Title VI of the Civil Rights Act of 1964 (P.L. 88-352) which prohibits discrimination on the basis of race, color or national origin; (b) Title IX of the Education Amendments of 1972, as amended (20 U.S.C. §§ 1681-1683, and 1685-1686), which prohibits discrimination on the basis of sex; (c) Section 504 of the Rehabilitation Act of 1973, as amended (29 U.S.C. § 794), which prohibits discrimination on the basis of handicaps; (d) the Age Discrimination Act of 1975, as amended (42 U.S.C.§§ 6101-6107), which prohibits discrimination on the basis of age; (e) the Drug Abuse Office and Treatment Act of 1972 (P.L. 92-255), as amended, relating to nondiscrimination on the basis of drug abuse; (f) the Comprehensive Alcohol Abuse and Alcoholism Prevention, Treatment and Rehabilitation Act of 1970 (P.L. 91-616), as amended, relating to nondiscrimination on the basis of alcohol abuse or alcoholism; (g) §§ 523 and 527 of the Public Health Service Act of 1912 (42 U.S.C. 290 dd-3 and 290 ee-3), as amended, relating to confidentiality of alcohol and drug abuse patient records; (h) Title VIII of the Civil Rights Act of 1968 (42 U S C § 3601 et seq.), as amended, relating to nondiscrimination in the sale, rental or financing of housing; (i) any other nondiscrimination provisions in the specific statute(s) under which application for Federal assistance is being made; and (j) the requirements of any other nondiscrimination statute(s) which may apply to the application.

7. Will comply, or has already complied, with the requirements of Titles II and III of the Uniform Relocation Assistance and Real Property Acquisition Policies Act of 1970 (P L. 91-646) which provide for fair and equitable treatment of persons displaced or whose property is acquired as a result of Federal or federally assisted programs These requirements apply to all interests in real property acquired for project purposes regardless of Federal participation in purchases.

8. Will comply with the provisions of the Hatch Act (5 U.S.C. §§ 1501-1508 and 7324-7328) which limit the political activities of employees whose principal employment activities are funded in whole or in part with Federal funds.

9. Will comply, as applicable, with the provisions of the Davis-Bacon Act (40 U.S.C. §§ 276a to 276a-7), the Copeland Act (40 U.S.C. § 276c and 18 U.S.C. §§ 874), and the Contract Work Hours and Safety Standards Act (40 U.S.C. §§ 327-333), regarding labor standards for federally assisted construction subagreements.

Standard Form 424B (4-88)
Prescribed by OMB Circular A-102

Authorized for Local Reproduction

10. Will comply, if applicable, with flood insurance purchase requirements of Section 102(a) of the Flood Disaster Protection Act of 1973 (P.L. 93-234) which requires recipients in a special flood hazard area to participate in the program andto purchase flood insurance if the total cost of insurable construction and acquisition is $10,000 or more.

11. Will comply with environmental standards which may be prescribed pursuant to the following: (a) institution of environmental quality control measures under the National Environmental Policy Act of 1969 (P.L. 91-190) and Executive Order (EO) 11514; (b) notification of violating facilities pursuant to EO 11738; (c) protection of wetlands pursuant to EO 11990; (d) evaluation of flood hazards in floodplains in accordance with EO 11988; (e) assurance of project consistency with the approved State management program developed under the Coastal Zone Management Act of 1972 (16 U.S.C. §§ 1451 et seq.); (f) conformity of Federal actions to State (Clear Air) Implementation Plans under Section 176(c) of the Clear Air Act of 1955, as amended (42 U.S.C. § 7401 et seq.); (g) protection of underground sources of drinking water under the Safe Drinking Water Act of 1974, as amended, (P.L. 93-523); and (h) protection of endangered species under the Endangered Species Act of 1973, as amended, (P.L. 93-205).

12. Will comply with the Wild and Scenic Rivers Act of 1968 (16 U.S.C. §§ 1271 et seq.) related to protecting components or potential components of the national wild and scenic rivers system.

13. Will assist the awarding agency in assuring compliance with Section 106 of the National Historic Preservation Act of 1966, as amended (16 U.S.C. 470), EO 11593 (identification and protection of historic properties), and the Archaeological and Historic Preservation Act of 1974 (16 U.S.C. 469a-1 et seq.).

14. Will comply with P.L. 93-348 regarding the protection of human subjects involved in research, development, and related activities supported by this award of assistance.

15. Will comply with the Laboratory Animal Welfare Act of 1966 (P.L. 89-544, as amended, 7 U.S.C. 2131 et seq.) pertaining to the care, handling, and treatment of warm blooded animals held for research, teaching, or other activities supported by this award of assistance.

16. Will comply with the Lead-Based Paint Poisoning Prevention Act (42 U.S.C. §§ 4801 et seq.) which prohibits the use of lead based paint in construction or rehabilitation of residence structures.

17. Will cause to be performed the required financial and compliance audits in accordance with the Single Audit Act of 1984.

18. Will comply with all applicable requirements of all other Federal laws, executive orders, regulations and policies governing this program.

SIGNATURE OF AUTHORIZED CERTIFYING OFFICIAL	TITLE
APPLICANT ORGANIZATION	DATE SUBMITTED

SF 424B (4-88) Back

CERTIFICATIONS REGARDING LOBBYING; DEBARMENT, SUSPENSION AND OTHER RESPONSIBILITY MATTERS; AND DRUG-FREE WORKPLACE REQUIREMENTS

Applicants should refer to the regulations cited below to determine the certification to which they are required to attest. Applicants should also review the instructions for certification included in the regulations before completing this form. Signature of this form provides for compliance with certification requirements under 34 CFR Part 82, "New Restrictions on Lobbying," and 34 CFR Part 85, "Government-wide Debarment and Suspension (Nonprocurement) and Government-wide Requirements for Drug-Free Workplace (Grants)." The certifications shall be treated as a material representation of fact upon which reliance will be placed when the Department of Education determines to award the covered transaction, grant, or cooperative agreement.

1. LOBBYING

As required by Section 1352, Title 31 of the U.S. Code, and implemented at 34 CFR Part 82, for persons entering into a grant or cooperative agreement over $100,000, as defined at 34 CFR Part 82, Sections 82.105 and 82.110, the applicant certifies that:

(a) No Federal appropriated funds have been paid or will be paid, by or on behalf of the undersigned, to any person for influencing or attempting to influence an officer or employee of any agency, a Member of Congress, an officer or employee of Congress, or an employee of a Member of Congress in connection with the making of any Federal grant, the entering into of any cooperative agreement, and the extension, continuation, renewal, amendment, or modification of any Federal grant or cooperative agreement;

(b) If any funds other than Federal appropriated funds have been paid or will be paid to any person for influencing or attempting to influence an officer or employee of any agency, a Member of Congress, an officer or employee of Congress, or an employee of a Member of Congress in connection with this Federal grant or cooperative agreement, the undersigned shall complete and submit Standard Form - LLL, "Disclosure Form to Report Lobbying," in accordance with its instructions;

(c) The undersigned shall require that the language of this certification be included in the award documents for all subawards at all tiers (including subgrants, contracts under grants and cooperative agreements, and subcontracts) and that all subrecipients shall certify and disclose accordingly.

2. DEBARMENT, SUSPENSION, AND OTHER RESPONSIBILITY MATTERS

As required by Executive Order 12549, Debarment and Suspension, and implemented at 34 CFR Part 85, for prospective participants in primary covered transactions, as defined at 34 CFR Part 85, Sections 85.105 and 85.110 --

A. The applicant certifies that it and its principals:

(a) Are not presently debarred, suspended, proposed for debarment, declared ineligible, or voluntarily excluded from covered transactions by any Federal department or agency;

(b) Have not within a three-year period preceding this application been convicted of or had a civil judgment rendered against them for commission of fraud or a criminal offense in connection with obtaining, attempting to obtain, or performing a public (Federal, State, or local) transaction or contract under a public transaction; violation of Federal or State antitrust statutes or commission of embezzlement, theft, forgery, bribery, falsification or destruction of records, making false statements, or receiving stolen property;

(c) Are not presently indicted for or otherwise criminally or civilly charged by a governmental entity (Federal, State, or local) with commission of any of the offenses enumerated in paragraph (1)(b) of this certification; and

(d) Have not within a three-year period preceding this application had one or more public transactions (Federal, State, or local) terminated for cause or default; and

B. Where the applicant is unable to certify to any of the statements in this certification, he or she shall attach an explanation to this application.

3. DRUG-FREE WORKPLACE (GRANTEES OTHER THAN INDIVIDUALS)

As required by the Drug-Free Workplace Act of 1988, and implemented at 34 CFR Part 85, Subpart F, for grantees, as defined at 34 CFR Part 85, Sections 85.605 and 85.610 --

A. The applicant certifies that it will or will continue to provide a drug-free workplace by:

(a) Publishing a statement notifying employees that the unlawful manufacture, distribution, dispensing, possession, or use of a controlled substance is prohibited in the grantee's workplace and specifying the actions that will be taken against employees for violation of such prohibition;

(b) Establishing an on-going drug-free awareness program to inform employees about--

(1) The dangers of drug abuse in the workplace;

(2) The grantee's policy of maintaining a drug-free workplace;

(3) Any available drug counseling, rehabilitation, and employee assistance programs; and

(4) The penalties that may be imposed upon employees for drug abuse violations occurring in the workplace;

(c) Making it a requirement that each employee to be engaged in the performance of the grant be given a copy of the statement required by paragraph (a);

(d) Notifying the employee in the statement required by paragraph (a) that, as a condition of employment under the grant, the employee will--

(1) Abide by the terms of the statement; and

(2) Notify the employer in writing of his or her conviction for a violation of a criminal drug statute occurring in the workplace no later than five calendar days after such conviction;

(e) Notifying the agency, in writing, within 10 calendar days after receiving notice under subparagraph (d)(2) from an employee or otherwise receiving actual notice of such conviction. Employers of convicted employees must provide notice, including position title, to: Director, Grants and Contracts Service, U.S. Department of Education, 400 Maryland Avenue, S.W. (Room 3124, GSA Regional Office

Building No. 3), Washington, DC 20202-4571. Notice shall include the identification number(s) of each affected grant;

(f) Taking one of the following actions, within 30 calendar days of receiving notice under subparagraph (d)(2), with respect to any employee who is so convicted—

(1) Taking appropriate personnel action against such an employee, up to and including termination, consistent with the requirements of the Rehabilitation Act of 1973, as amended; or

(2) Requiring such employee to participate satisfactorily in a drug abuse assistance or rehabilitation program approved for such purposes by a Federal, State, or local health, law enforcement, or other appropriate agency;

(g) Making a good faith effort to continue to maintain a drug-free workplace through implementation of paragraphs (a), (b), (c), (d), (e), and (f).

B. The grantee may insert in the space provided below the site(s) for the performance of work done in connection with the specific grant:

Place of Performance (Street address, city, county, state, zip code)

_____

_____

_____

Check ☐ if there are workplaces on file that are not identified here.

DRUG-FREE WORKPLACE (GRANTEES WHO ARE INDIVIDUALS)

As required by the Drug-Free Workplace Act of 1988, and implemented at 34 CFR Part 85, Subpart F, for grantees, as defined at 34 CFR Part 85, Sections 85.605 and 85.610 —

A. As a condition of the grant, I certify that I will not engage in the unlawful manufacture, distribution, dispensing, possession, or use of a controlled substance in conducting any activity with the grant; and

B. If convicted of a criminal drug offense resulting from a violation occurring during the conduct of any grant activity, I will report the conviction, in writing, within 10 calendar days of the conviction, to: Director, Grants and Contracts Service, U.S. Department of Education, 400 Maryland Avenue, S.W. (Room 3124, GSA Regional Office Building No. 3), Washington, DC 20202-4571. Notice shall include the identification number(s) of each affected grant.

As the duly authorized representative of the applicant, I hereby certify that the applicant will comply with the above certifications.

NAME OF APPLICANT	PR/AWARD NUMBER AND/OR PROJECT NAME
PRINTED NAME AND TITLE OF AUTHORIZED REPRESENTATIVE	
SIGNATURE	DATE

ED 80-0013

Certification Regarding Debarment, Suspension, Ineligibility and Voluntary Exclusion -- Lower Tier Covered Transactions

This certification is required by the Department of Education regulations implementing Executive Order 12549, Debarment and Suspension, 34 CFR Part 85, for all lower tier transactions meeting the threshold and tier requirements stated at Section 85.110.

Instructions for Certification

1. By signing and submitting this proposal, the prospective lower tier participant is providing the certification set out below.

2. The certification in this clause is a material representation of fact upon which reliance was placed when this transaction was entered into. If it is later determined that the prospective lower tier participant knowingly rendered an erroneous certification, in addition to other remedies available to the Federal Government, the department or agency with which this transaction originated may pursue available remedies, including suspension and/or debarment.

3. The prospective lower tier participant shall provide immediate written notice to the person to which this proposal is submitted if at any time the prospective lower tier participant learns that its certification was erroneous when submitted or has become erroneous by reason of changed circumstances.

4. The terms "covered transaction," "debarred," "suspended," "ineligible," "lower tier covered transaction," "participant," "person," "primary covered transaction," "principal," "proposal," and "voluntarily excluded," as used in this clause, have the meanings set out in the Definitions and Coverage sections of rules implementing Executive Order 12549. You may contact the person to which this proposal is submitted for assistance in obtaining a copy of those regulations.

5. The prospective lower tier participant agrees by submitting this proposal that, should the proposed covered transaction be entered into, it shall not knowingly enter into any lower tier covered transaction with a person who is debarred, suspended, declared ineligible, or voluntarily excluded from participation in this covered transaction, unless authorized by the department or agency with which this transaction originated.

6. The prospective lower tier participant further agrees by submitting this proposal that it will include the clause titled "Certification Regarding Debarment, Suspension, Ineligibility, and Voluntary Exclusion--Lower Tier Covered Transactions," without modification, in all lower tier covered transactions and in all solicitations for lower tier covered transactions.

7. A participant in a covered transaction may rely upon a certification of a prospective participant in a lower tier covered transaction that it is not debarred, suspended, ineligible, or voluntarily excluded from the covered transaction, unless it knows that the certification is erroneous. A participant may decide the method and frequency by which it determines the eligibility of its principals. Each participant may, but is not required to, check the Nonprocurement List.

8. Nothing contained in the foregoing shall be construed to require establishment of a system of records in order to render in good faith the certification required by this clause. The knowledge and information of a participant is not required to exceed that which is normally possessed by a prudent person in the ordinary course of business dealings.

9. Except for transactions authorized under paragraph 5 of these instructions, if a participant in a covered transaction knowingly enters into a lower tier covered transaction with a person who is suspended, debarred, ineligible, or voluntarily excluded from participation in this transaction, in addition to other remedies available to the Federal Government, the department or agency with which this transaction originated may pursue available remedies, including suspension and/or debarment.

Certification

(1) The prospective lower tier participant certifies, by submission of this proposal, that neither it nor its principals are presently debarred, suspended, proposed for debarment, declared ineligible, or voluntarily excluded from participation in this transaction by any Federal department or agency.

(2) Where the prospective lower tier participant is unable to certify to any of the statements in this certification, such prospective participant shall attach an explanation to this proposal.

NAME OF APPLICANT	PR/AWARD NUMBER AND/OR PROJECT NAME
PRINTED NAME AND TITLE OF AUTHORIZED REPRESENTATIVE	
SIGNATURE	DATE

ED 80-0014, 9/90 (Replaces GCS-009 (REV. 12/88), which is obsolete)

DISCLOSURE OF LOBBYING ACTIVITIES

Approved by OMB
0348-0046

Complete this form to disclose lobbying activities pursuant to 31 U.S.C. 1352
(See reverse for public burden disclosure.)

1. Type of Federal Action: ☐ a. contract b. grant c. cooperative agreement d. loan e. loan guarantee f. loan insurance	2. Status of Federal Action: ☐ a. bid/offer/application b. initial award c. post-award	3. Report Type: ☐ a. initial filing b. material change For Material Change Only: year _____ quarter _____ date of last report _____
4. Name and Address of Reporting Entity: ☐ Prime ☐ Subawardee Tier _____, *if known*: Congressional District, *if known*:	5. If Reporting Entity in No. 4 is Subawardee, Enter Name and Address of Prime: Congressional District, *if known*:	
6. Federal Department/Agency:	7. Federal Program Name/Description: CFDA Number, *if applicable*: _____	
8. Federal Action Number, *if known*:	9. Award Amount, *if known*: $	
10. a. Name and Address of Lobbying Entity *(if individual, last name, first name, MI)*:	b. Individuals Performing Services *(including address if different from No. 10a)* *(last name, first name, MI)*:	

(attach Continuation Sheet(s) SF-LLL-A, if necessary)

11. Amount of Payment *(check all that apply)*: $ _____ ☐ actual ☐ planned	13. Type of Payment *(check all that apply)*: ☐ a. retainer ☐ b. one-time fee ☐ c. commission ☐ d. contingent fee ☐ e. deferred ☐ f. other; specify: _____
12. Form of Payment *(check all that apply)*: ☐ a. cash ☐ b. in-kind; specify: nature _____ value _____	

14. Brief Description of Services Performed or to be Performed and Date(s) of Service, including officer(s), employee(s), or Member(s) contacted, for Payment Indicated in Item 11:

(attach Continuation Sheet(s) SF-LLL-A, if necessary)

15. Continuation Sheet(s) SF-LLL-A attached: ☐ Yes ☐ No

16. Information requested through this form is authorized by title 31 U.S.C. section 1352. This disclosure of lobbying activities is a material representation of fact upon which reliance was placed by the tier above when this transaction was made or entered into. This disclosure is required pursuant to 31 U.S.C.1352. This information will be reported to the Congress semi-annually and will be available for public inspection. Any person who fails to file the required disclosure shall be subject to a civil penalty of not less than $10,000 and not more than $100,000 for each such failure.	Signature: _____ Print Name: _____ Title: _____ Telephone No.: _____ Date: _____
Federal Use Only:	Authorized for Local Reproduction Standard Form - LLL

INSTRUCTIONS FOR COMPLETION OF SF-LLL, DISCLOSURE OF LOBBYING ACTIVITIES

This disclosure form shall be completed by the reporting entity, whether subawardee or prime Federal recipient, at the initiation or receipt of a covered Federal action, or a material change to a previous filing, pursuant to title 31 U.S.C. section 1352. The filing of a form is required for each payment or agreement to make payment to any lobbying entity for influencing or attempting to influence an officer or employee of any agency, a Member of Congress, an officer or employee of Congress, or an employee of a Member of Congress in connection with a covered Federal action. Use the SF-LLL-A Continuation Sheet for additional information if the space on the form is inadequate. Complete all items that apply for both the initial filing and material change report. Refer to the implementing guidance published by the Office of Management and Budget for additional information.

1. Identify the type of covered Federal action for which lobbying activity is and/or has been secured to influence the outcome of a covered Federal action.
2. Identify the status of the covered Federal action.
3. Identify the appropriate classification of this report. If this is a followup report caused by a material change to the information previously reported, enter the year and quarter in which the change occurred. Enter the date of the last previously submitted report by this reporting entity for this covered Federal action.
4. Enter the full name, address, city, state and zip code of the reporting entity. Include Congressional District, if known. Check the appropriate classification of the reporting entity that designates if it is, or expects to be, a prime or subaward recipient. Identify the tier of the subawardee, e.g., the first subawardee of the prime is the 1st tier. Subawards include but are not limited to subcontracts, subgrants and contract awards under grants.
5. If the organization filing the report in item 4 checks "Subawardee", then enter the full name, address, city, state and zip code of the prime Federal recipient. Include Congressional District, if known.
6. Enter the name of the Federal agency making the award or loan commitment. Include at least one organizational level below agency name, if known. For example, Department of Transportation, United States Coast Guard.
7. Enter the Federal program name or description for the covered Federal action (item 1). If known, enter the full Catalog of Federal Domestic Assistance (CFDA) number for grants, cooperative agreements, loans, and loan commitments.
8. Enter the most appropriate Federal identifying number available for the Federal action identified in item 1 (e.g., Request for Proposal (RFP) number; Invitation for Bid (IFB) number; grant announcement number; the contract, grant, or loan award number; the application/proposal control number assigned by the Federal agency). Include prefixes, e.g., "RFP-DE-90-001."
9. For a covered Federal action where there has been an award or loan commitment by the Federal agency, enter the Federal amount of the award/loan commitment for the prime entity identified in item 4 or 5.
10. (a) Enter the full name, address, city, state and zip code of the lobbying entity engaged by the reporting entity identified in item 4 to influence the covered Federal action.

    (b) Enter the full names of the individual(s) performing services, and include full address if different from 10 (a). Enter Last Name, First Name, and Middle Initial (MI).
11. Enter the amount of compensation paid or reasonably expected to be paid by the reporting entity (item 4) to the lobbying entity (item 10). Indicate whether the payment has been made (actual) or will be made (planned). Check all boxes that apply. If this is a material change report, enter the cumulative amount of payment made or planned to be made.
12. Check the appropriate box(es). Check all boxes that apply. If payment is made through an in-kind contribution, specify the nature and value of the in-kind payment.
13. Check the appropriate box(es). Check all boxes that apply. If other, specify nature.
14. Provide a specific and detailed description of the services that the lobbyist has performed, or will be expected to perform, and the date(s) of any services rendered. Include all preparatory and related activity, not just time spent in actual contact with Federal officials. Identify the Federal official(s) or employee(s) contacted or the officer(s), employee(s), or Member(s) of Congress that were contacted.
15. Check whether or not a SF-LLL-A Continuation Sheet(s) is attached.
16. The certifying official shall sign and date the form, print his/her name, title, and telephone number.

Public reporting burden for this collection of information is estimated to average 30 mintues per response, including time for reviewing instructions, searching existing data sources, gathering and maintaining the data needed, and completing and reviewing the collection of information. Send comments regarding the burden estimate or any other aspect of this collection of information, including suggestions for reducing this burden, to the Office of Management and Budget, Paperwork Reduction Project (0348-0046), Washington, D.C. 20503.

DISCLOSURE OF LOBBYING ACTIVITIES
CONTINUATION SHEET

Approved by OMB
0348-0046

Reporting Entity: _____ Page _____ of _____

Authorized for Local Reproduction
Standard Form - LLL-A

[FR Doc. 94–19870 Filed 8–12–94; 8:45 am]
BILLING CODE 4000–01–P

federal register

Monday
August 15, 1994

Part VIII

Department of the Interior

Bureau of Indian Affairs

25 CFR Part 115
Individual Indian Money Accounts; Proposed Rule

DEPARTMENT OF THE INTERIOR

Bureau of Indian Affairs

25 CFR Part 115

RIN 1076–AC65

Individual Indian Money Accounts

AGENCY: Bureau of Indian Affairs, Interior.

ACTION: Proposed rule.

SUMMARY: The Bureau of Indian Affairs (BIA) is proposing to revise and replace the existing regulations contained in 25 CFR Part 115 governing the establishment, management, control, closure and deletion of Individual Indian Money (IIM) accounts, by the Secretary of the Interior. The growth in the number of IIM accounts maintained by the BIA makes it necessary and desirable for the Secretary of the Interior to promulgate revised regulations that will secure the integrity of the system and ensure that the IIM accounts will be maintained in an efficient and accountable manner.

The proposed regulations clarify and expand upon current regulations, and to the extent practicable, incorporate and standardize BIA practices for maintaining and administering IIM accounts.

DATES: Comments must be received on before October 14, 1994.

ADDRESSES: Written comments should be directed to the Bureau of Indian Affairs, Office of Trust Funds Management, 505 Marquette N.W., Suite 700, Albuquerque, New Mexico 87102.

FOR FURTHER INFORMATION CONTACT: Mr. Jim Parris, Bureau of Indian Affairs, Office of Trust Funds Management, 505 Marquette NW, Suite 700, Albuquerque, New Mexico 87102, telephone number 505–766–3233.

SUPPLEMENTARY INFORMATION: This proposed rulemaking action will revise Part 115 to Chapter 1 of Title 25 of the Code of Federal Regulations, which contains general regulations governing Individual Indian Money (IIM) accounts, to set forth authorities, policy, and procedures to be followed governing the establishment, management, control, closure, and deletion of Individual Indian Money (IIM) accounts, by the Secretary of the Interior, with certain exceptions which are set forth in 25 CFR Parts 16 and 116 (Five Civilized Tribes), 25 CFR Parts 17 and 117 (Osage).

Section 115.1 This section sets forth the purpose and scope of these regulations. The Secretary of the Interior is obligated by statute to establish, manage, and control individual Indian money accounts, and has been granted the authority to promulgate regulations to implement such responsibilities.

Section 115.2 This section revises former § 115.1 and expands upon the definitions for the purpose of clarification, standardization, and to avoid ambiguities in the implementation of Part 115.

Section 115.3 This section is new and sets forth the authority and procedures for establishing IIM accounts.

Section 115.3(a) This paragraph formalizes the authority of the Secretary to establish IIM accounts. To avoid potential duplication of IIM accounts and resulting inconsistencies in the management of an individual's trust funds, this paragraph authorizes only one IIM account per account holder.

Section 115.3(b) This paragraph specifies the Bureau of Indian Affairs agency is responsible for establishing and maintaining an IIM account.

Section 115.3(c) This paragraph requires that the social security number for the account holder be furnished to the Secretary thereby enabling the Secretary to meet the requirement to comply with the reporting and filing requirements set forth by the Internal Revenue Code, including the Tax Equity and Fiscal Responsibility Act of 1982, and those of the various states. See § 115.10.

Section 115.4 This is a new section which formally recognizes the authority of the Secretary to close and delete certain IIM accounts. It is noted that the closure or deletion of an IIM account does not preclude the Secretary from reopening or re-establishing such account.

Section 115.4(a) This paragraph establishes the circumstances under which the Secretary will close an IIM account.

Section 115.4(b) This paragraph provides for deletion of an IIM account from the system after one year from the date of closure, thus allowing for the Secretary to meet tax reporting and filing requirements.

Section 115.5 This section revises former § 115.6. Conditions do arise requiring the Secretary to accept and place monies which are not derived from trust resources, tribal judgment awards, or other Federal Agencies in IIM accounts to meet critical situations as defined in § 115(8)(c).

Section 115.6 This section is new and recognizes the statutory authority of the Secretary to invest funds for the benefit of account holders.

Section 115.7 This section is new and provides direction and standardization of the disbursement policy and procedures for IIM funds.

Section 115.7(a) This paragraph requires that funds will be automatically disbursed unless otherwise provided by this part.

Section 115.7(b) This paragraph formally recognizes the general statutory prohibition of payment of judgments and/or levies, or placement of liens against funds from IIM accounts, unless such levies and/or liens are specifically permitted by statute or Title 25 of the Code of Federal Regulations. This paragraph also recognizes the authority of the Secretary to apply an account holder's funds against delinquent debts due the United States and/or the account holder's tribe, subject to certain limitations and conditions.

Section 115.7(c) This paragraph recognizes the Secretary's authority to supervise certain categories of IIM accounts and to place conditions on disbursements pursuant to § 115.8.

Section 115.7(d) This paragraph recognizes the Secretary's authority to correct posting and recording errors which are clerical in nature, provided corrections are made prior to disbursement of funds. Where the posting error has resulted in a wrongful disbursement, the Secretary may place restrictions on the accounts affected by the disbursement until such time that the wrongful disbursement is rectified. In these cases, the regulation affords opportunity for notice and hearing to the affected account holder pursuant to § 115.12.

Section 115.7(e) This paragraph recognizes the authority of the Secretary to place restrictions on an IIM account to which distributions of estate proceeds have been made pursuant to the probate order of the administrative law judge, and subsequent modifications to the order require reallocation of the initial distribution. The account holder so affected is given an opportunity to dispute the equity of the restrictions.

Section 115.7(f) This paragraph provides for prompt payment to be made to rightful owner(s) within an specified time when an erroneous disbursement has occurred.

Section 115.8 This section revises former § 115.4 and recognizes the authority of Federal agencies to deposit monies into the IIM account for the benefit of minors or adults, non compos mentis or under other legal disability, for whom no legal guardian or fiduciary has been appointed. This section provides for the supervision of IIM accounts for six categories of account holders.

Section 115.8(a) This paragraph denotes "Minors" as supervised account holders.

Section 115.8(a)(1) This subparagraph revises former § 115.4(a) and provides for the supervision of funds of a minor, except for those funds derived from per capita shares of tribal judgment awards.

Section 115.8(a)(2) This subparagraph revises former § 115.4(b) and provides for the supervision of funds of a minor which have been derived from per capita shares of tribal judgment awards. The limitation on the amount of funds disbursed and reference to withdrawals upon reaching the age of majority have been removed so as to avoid potential conflict with any congressional plan associated with the judgment award.

Section 115.8(b) This paragraph revises former § 115.5 and denotes "Adults, non compos mentis or under other legal disability" as supervised account holders. This paragraph provides for conditions of disbursement similar to those of minor account holders.

Section 115.8(c) This paragraph is new and denotes "Account holders requesting and requiring assistance" as supervised account holders. This paragraph references § 115.3(d) which clarifies the right of those account holders, whose IIM accounts are not otherwise restricted under this part, to place conditions of disbursement upon their IIM accounts. Under this new paragraph, such conditions of disbursement shall not take effect unless approved by the Secretary.

Section 115.8(d) This paragraph is new and denotes "Account holders—Whereabouts unknown" as supervised account holders.

Section 115.8(e) This paragraph replaces § 115.11 and revises the language to read "Deceased account holders other than those of the Five Civilized Tribes and the Osage Tribe" as supervised account holders. Part 15 of this chapter was modified to add "the Osage Tribe" and this paragraph will revise the language to include the addition of the Osage Tribe also. This paragraph references 25 CFR Part 15 which in turn references 43 CFR Part 4, Subpart D. When the provisions governing the administration of these IIM accounts were incorporated into 43 CFR part 4, Subpart D, in 1971, the language appearing in § 115.11 was not modified accordingly. This paragraph will correct that oversight.

Section 115.8(f) This paragraph denotes "Deceased account holders of the Five Civilized Tribes" as supervised account holders and revises former § 115.12. The substance of this regulation has not been significantly changed.

Section 115.8(g) This paragraph is new and provides restoration of unclaimed IIM monies to tribal ownership or deposit to the general fund of the U.S. Treasury after six (6) years.

Section 115.8(h) This paragraph is new and provides guidance in handling proceeds of sale of capital assets in compliance with proposed use plans approved by the Secretary or authorized representative prior to sale.

Section 115.8(i) This paragraphs is new and provides direction in dealing with creditor claims against an account holder.

Section 115.9 This paragraph is new and sets forth authority for providing statements to IIM account holders.

Section 115.9(a) This paragraph formalizes the authority of the Secretary to provide periodic statements of IIM accounts to account holders.

Section 115.9(b) This paragraph formalizes the authority of the Secretary to provide account statements to minors and adults, non compos mentis or under other legal disability.

Section 115.9(c) This paragraph recognizes the statutory obligation of the Secretary to provide explanation of payments of oil and gas royalties to respective account holders, as required by 30 U.S.C. 1701.

Section 115.10 This section is new and recognizes the reporting requirements imposed upon the Secretary by the Internal Revenue Code and regulations promulgated thereunder. This section also authorizes the Secretary to meet the filing requirements of the Internal Revenue Service, and the various states, for and on behalf of supervised account holders.

Section 115.11 This is a new section which incorporates, by cross reference, 25 CFR Part 103, § 103.33 Assignment of Income, into this part.

Section 115.12 This section revises former § 115.10 and clarifies and elaborates upon the application of the notice and hearing requirements of the Administrative Procedure Act, for the purposes of this part.

Section 115.13 This section revises former § 115.13 and brings the regulation into compliance with 25 U.S.C. 954(e).

Section 115.14 This section revises former § 115.14 and updates the reference to § 115.12.

The policy of the Department of the Interior is, whenever, practical, to afford the public an opportunity to participate in the rulemaking process. Accordingly, interested persons may submit written comments regarding the proposed rule to the locations identified in the Addresses section of this preamble.

The Department of the Interior has determined that this rule is not a significant regulatory action under Executive Order 12866, and therefore will not be reviewed by the Office of Management and Budget. This rule will not have a significant economic impact on a substantial number of small entities under the Regulatory Flexibility Act (5 U.S.C. 601 et seq.).

The Department of the Interior has determined that this proposed rule does not constitute a major Federal action significantly affecting the quality of the human environment and that no detailed statement is required pursuant to the National Environmental Policy Act of 1969.

The Department of the Interior has certified to the Office of Management and Budget that this proposed regulation meets the applicable standards provided in Sections 2(a) and 2(b)(2) of Executive Order 12778.

The Department of the Interior has determined that this proposed rule does not have significant takings implications.

The Department of the Interior has determined that this proposed rule does not have significant federalism effects.

This rule does not contain information collection requirements which require approval of the Office of Management and Budget under 44 U.S.C. 3501 et seq.

The primary author of this proposed rule is William F. Benjamin, Jr., Chief, Branch of Payments, Bureau of Indian Affairs, Division of Accounting Management, Office of Management and Administration. However, personnel from other offices of the Bureau of Indian Affairs, the Department of the Interior, Office of the Solicitor—Indian Affairs and tribal representatives participated in the developing of the regulations both on matters of substance and style.

List of Subjects in 25 CFR Part 115

Indians—business and finance; Administrative practices and procedures.

For the reasons set out in the preamble, 25 CFR part 115 is proposed to be revised to read as follows.

PART 115—INDIVIDUAL INDIAN MONEY ACCOUNTS

Table of Contents

Sec.
115.1 Purpose, scope and information collection.
115.2 Definitions.

115.3 Establishing IIM accounts.
115.4 Closure and deletion of accounts.
115.5 Voluntary deposits.
115.6 Investment of IIM funds.
115.7 Disbursement policy and procedures.
115.8 Supervised IIM accounts.
115.9 Statement of IIM account.
115.10 Tax requirements.
115.11 Assignment of income.
115.12 Notice and hearing.
115.13 Assets of members of the Aqua Caliente Band of Cahuilla Indians.
115.14 Appeals.

Authority: 5 U.S.C. 301; 25 U.S.C. 2, 9; 25 U.S.C. 954(e); 43 U.S.C. 1457.

§ 115.1 Purpose, scope and information collection.

(a) These regulations set forth the authorities, policy, and procedures governing the establishment, management, control, closure, and deletion of Individual Indian Money (IIM) accounts, by the Secretary of the Interior. Certain exceptions to these rules are set forth in 25 CFR Parts 16 and 116 (Five Civilized Tribes) and 25 CFR Parts 17 and 117 (Osage).

(b) These regulations do not contain information collection requirements that require the approval of the Office of Management and Budget under 44 U.S.C. 3501 et seq.

(c) Disclosure of any account information from IIM Ledgers and Cards and IIM Case Files systems is controlled by the Privacy Act of 1974, as amended, 5 U.S.C. 522a.

§ 115.2 Definitions.

Account holder means a beneficiary of an IIM account.

Adult means an account holder who has reached the age of 18.

Agency means an Indian agency or other field unit of the Bureau of Indian Affairs having trust or restricted Indian land under its immediate jurisdiction.

Closure means placing an IIM account in a status whereby such account is no longer accessible for accounting activity.

Deletion means elimination of an account from the IIM accounting system.

Funds means monies deposited and/or held in an IIM account whether derived from trust and restricted resources, Federal entities, tribal judgment awards or voluntary deposits.

Inactive means there has been no posting into or out of an IIM account for 13 months.

Individual Indian Money (IIM) account means a U.S. Treasury account established and controlled by the Secretary of the Interior for the purpose of depositing, maintaining and disbursing funds for the benefit of an individual recognized by the Secretary as an Indian or Alaskan Native to whom the United States owes a trust and/or fiduciary responsibility.

Interest means the earnings derived from the investment of IIM funds during the time they are in the custody of the Secretary.

ISSDA means Indian Service Special Disbursing Agent.

Minor means an account holder who has not reached the age of 18.

Secretary means the Secretary of the Interior or authorized representative, and, for purposes of § 115.13, means the officer in charge of the Palm Springs Office, Bureau of Indian Affairs.

Supervised IIM account means an IIM account administered by the Secretary for a minor, an account holder declared non compos mentis or under other legal disability, an account holder requesting or requiring assistance with the management of his/her funds, an account holder whose whereabouts are unknown, or a deceased account holder.

Voluntary deposit means acceptance of a deposit of money by the Secretary or authorized representative from an account holder, or any person or entity, into an IIM account. Monies deposited by a Federal entity pursuant to 25 U.S.C. 14 or by a tribe are authorized deposits and shall not be considered voluntary deposits.

§ 115.3 Establishing IIM accounts.

(a) The Secretary is authorized to establish one IIM account per account holder except as otherwise provided by statute.

(b) The Secretary shall establish an IIM account at the agency as indicated by the respective account holder's identification number. The responsible agency is normally the agency that serves the tribe in which the account holder is enrolled.

(c) Prior to the establishment of an IIM account, the account holder's social security number shall be provided to the Secretary.

§ 115.4 Closure and deletion of accounts.

(a) The Secretary may close an IIM account under the following circumstances:

(1) Upon determination that an account is inactive for one or more of the following reasons:

(i) Readily available evidence indicates that no further trust income is forthcoming;

(ii) The account holder does not own any trust assets; or

(iii) The account has a balance of less than $15 that has not been disbursed during the year due to administrative policy. In this case, the funds shall be disbursed at year end closing regardless of amount and the account closed provided the conditions of (i) and/or (ii) above apply. The provisions of § 115.8 (d) and (g) shall apply for an account holder whose whereabouts are unknown.

(2) Upon fulfillment of the orders of the Administrative Law Judge, Office of Hearings and Appeals, the restoration to tribal ownership as provided § 115.8(g) or like authority as provided by statute;

(b) After an IIM account has been closed for a period of one year, the Secretary will delete the account from the IIM accounting system within the following six month period.

§ 115.5 Voluntary deposits.

Voluntary deposits for the sole purpose of investment will not be accepted by the Secretary. Voluntary deposits shall be excepted under the following conditions:

(a) Monies received from Federal agencies pursuant to 25 U.S.C. 14 for the benefit of a minor or adult, non compos mentis or under other legal disability, for whom no legal guardian or fiduciary has been appointed may be deposited into the account holder's IIM account; or

(b) Monies from any source may be deposited into an account when the account holder has been determined to be in need of assistance by the Secretary in accordance with the provisions of § 115.8(c), or to avoid a substantial hardship explained in a recorded written justification approved by the Secretary and maintained in the records of the account holder.

§ 115.6 Investment of IIM funds.

The Secretary is authorized, in his/her discretion, to invest IIM funds in accordance with 25 U.S.C. 162a during the time they are in the custody of the Bureau of Indian Affairs.

§ 115.7 Disbursement policy and procedures.

(a) Except as otherwise provided in this part, the Secretary shall automatically disburse to the account holder funds and accrued interest funds held in an unrestricted, unsupervised IIM account. All disbursements shall be made at times and places the Secretary may designate.

(b) Funds shall not be disbursed for the payment of judgments, levies, and/or liens, absent specific authorization by statute and/or Title 25 of the Code of Federal Regulations except as provided in paragraph (c) of this section.

(c) Funds of an account holder may be applied by the Secretary against delinquent debts to the United States or to the tribe of which the account holder is a member, unless such payments are

prohibited by acts of Congress; and against money judgments rendered by Courts of Indian Offenses or any ordinances or codes of the tribe not prohibited by Federal laws.

(1) A temporary restriction shall be placed on the affected IIM account on receipt of an order of execution of a Court of Indian Offenses money judgment pending final determination of collection action by the Secretary.

(2) Notice of the proposed collection action shall be provided to the account holder pursuant to § 115.12 at the time the temporary restriction is placed.

(d) Funds of an account holder that have been placed under supervision pursuant to the authorities set forth in § 115.8 (a), (b), (c), (d), (e) or (f) shall be disbursed in strict accordance with the provisions of the applicable authority. Although a restriction may be placed on an adult's IIM account at the time supervision is approved by the Secretary under authority of § 115.8 (b), (c) or (d), notice must be provided to the account holder as required in § 115.12.

(e) Posting and/or recording errors may be corrected at the Secretary's discretion, provided disbursement has not been made. If an erroneous disbursement is made, corrective action will be taken pursuant to § 115.7(f).

(f) If an IIM account(s) is credited pursuant to a probate order of an administrative law judge and that order is subsequently modified to effect a different distribution of the estate, a temporary restriction will be placed on the affected IIM account(s) immediately upon receipt of the modification. The restriction shall remain effective until the Secretary determines the final collection action to be taken. The Secretary shall notify the affected account holder(s), pursuant to § 115.12, at the time the temporary restriction is placed.

(g) In no instance shall an erroneous disbursement delay prompt payment to the rightful owner.

(1) Within five working days after discovery that an erroneous disbursement has been made from an IIM account, the deputy ISSDA shall transmit a complete report of the incident to the ISSDA, and the Agency Superintendent shall place a restriction on the IIM account of the beneficiary of the error.

(2) The report shall indicate: the cause of the error; recommended corrective action; impact on account holder; and when collection of any overpayment might be expected and its source.

(3) The ISSDA shall, within ten working days of receipt of the report: authorize payment to the rightful owner from available appropriated funds subject to the Secretary's delegated authority, place a restriction on the IIM account of the erroneous beneficiary and/or direct any other remedial action as he/she determines required or appropriate.

(4) Upon receipt of instruction from the ISSDA, the Agency Superintendent shall immediately issue the notice of the proposed collection action to the erroneous beneficiary in accordance with § 115.12.

§ 115.8 Supervised IIM accounts.

(a) *Minors.* (1) Funds of a minor, except as otherwise provided in paragraph (a)(2) of this section, shall be disbursed, in amounts deemed by the Secretary to be necessary in the best interest of the minor for the minor's support, health, education, and/or welfare. Disbursements shall be made upon such conditions as the Secretary may prescribe to parents, legal guardians, fiduciaries, or persons having the control and custody of the minor, or to the minor directly, under a written plan approved by the Secretary. The Secretary may modify an approved plan whenever he/she deems modification to be in the best interest of the minor.

(2) A minor's per capita share of a tribal judgment award, including accrued interest, shall be disbursed in accordance with the congressionally approved distribution plan and 25 CFR § 87.10.

(b) *Adults under legal disability.* The funds of an adult who is non compos mentis or under other legal disability shall be disbursed in amounts deemed by the Secretary to be in the best interest of the adult. Disbursements shall be made for the adult's support, health, education, and/or welfare. Funds shall be disbursed upon such conditions as the Secretary may prescribe to legal guardians, fiduciaries, or persons having the control and custody of the adult; or to the adult directly, under a written plan approved by the Secretary. The Secretary may modify the approved plan whenever he/she deems modification to be in the best interest of the adult.

(c) *Accounts in need of assistance.* The funds of adults who are not non compos mentis or under other legal disability, whom the Secretary finds to be in need of assistance in the management of their affairs, may be disbursed on the basis of an approved written plan containing terms and conditions requested by the adult or prescribed by the Secretary.

(1) Disbursement plans are authorized to protect the interests of the elderly, handicapped, addicted, imprisoned, children, and spouses affected by divorce or separation or those who suffer other social or physical problems and impairments.

(2) When this action is taken at the written request of the account holder, he/she shall authorize the Secretary to waive all terms and conditions in emergencies where the account holder may become unable to nullify them because of illness or incapacity.

(3) The Secretary or authorized representative may modify an approved plan wherever it is deemed in the best interest of the adult, but shall record all such changes.

(4) All disbursement plans shall be supported by a social services summary and recommendation, approved by the Secretary, justifying the determination of need. The recommendation will be maintained in the account holder's social services case file.

(d) *Whereabouts unknown.* The IIM account of an account holder whose whereabouts are unknown shall be supervised until closed pursuant to § 115.4. Agency supervision of the account shall include continuing and diligent search for the account holder and shall be done with oversight and assistance from the Office of Trust Funds Management.

(e) *Deceased other than Five Civilized Tribes and the Osage Tribe.* The account of a deceased Indian other than those of the Five Civilized Tribes and the Osage Tribe shall be supervised under 25 CFR 15. Funds from the account may be disbursed for:

(1) Payment of obligations previously authorized, including authorized expenses for last illness;

(2) Authorized funeral expenses;

(3) Support of dependent members of the family of the decedent in amounts deemed necessary to avoid hardship and consistent with the value of the estate and the interests of probable heirs;

(4) Necessary expenses to conserve the estate pending the completion of probate proceedings; and

(5) Probate fees and claims allowed pursuant to part 15 of this chapter.

(f) *Deceased—Five Civilized Tribes.* Funds of a deceased account holder who was a member of one of the Five Civilized Tribes may be disbursed for: payment of ad valorem and personal property taxes; obligations approved by the Secretary prior to the death of the account holder; expenses of last illness and burial; claims found to be just and reasonable that are not barred by the statute of limitations; the cost of determining heirs to restricted property or funds by the State courts; and claims allowed pursuant to 25 CFR 16.

(g) *Restorations and deposits to general fund.* The following types of funds and accrued interest shall be restored to tribal ownership or deposited to the general fund of the Treasury in accordance with 25 USC 164, 165:

(1) Unclaimed per capita shares or other distributions; and

(2) Individualization, segregation, or proration of Indian tribal or group funds redeposited to an individual's IIM account and held in trust by the United States for a period of six years from the date of the administrative directive to make the payment.

(h) *Sale of capital assets.* Funds of an adult that are derived from the sale of capital assets shall be expended only for those specific purposes agreed to and approved by the Secretary prior to sale. The proposed use plan will normally be presented in conjunction with an application for sale of trust property submitted for approval.

(i) *Creditor claims.* In accordance with § 115.11, funds may not be disbursed to satisfy creditor claims against an account holder for purposes not approved in advance by the Secretary, except as provided in § 115.7(b).

§ 115.9 Statement of IIM account.

(a) Statements of IIM accounts shall be provided to account holders, at least quarterly. An account holder may request current account status reports at any time at his/her Agency office.

(b) Statements of IIM accounts for minors and non compos mentis or otherwise legally disabled adults, shall be furnished to parents, legal guardians, fiduciaries or persons having control and/or custody of the account holder, or to the account holder directly, under a plan approved by the Secretary.

(c) A separate explanation shall be provided to an account holder at the time of disbursement of oil and gas royalties from the account. An account holder may request further explanation and assistance on oil and gas disbursements at any time at the Agency office.

§ 115.10 Tax requirements.

(a) The Secretary shall comply with all applicable reporting requirements of the Internal Revenue Service and the various States.

(b) The Secretary is authorized to meet all filing requirements of the Internal Revenue Service and the various States for and on behalf of supervised account holders.

§ 115.11 Assignment of income.

(a) Any assignment of future trust income shall require a contractual agreement to be executed between a non-Federal/tribal creditor and an account holder. The assignment agreement shall be made at the time a loan arrangement is consummated. The agreement shall be approved by the Secretary in advance of the receipt of the income into the account.

(b) Future income obligated under an approved agreement shall be disbursed only in accordance with the terms of the agreement, subject to any deductions specifically authorized or directed by acts of Congress or modifications thereof. An approved agreement can be withdrawn or modified prior to fulfillment only with the approval of the Secretary. Assignments of income shall be administered in accordance with the provisions of § 103.33.

§ 115.12 Notice and hearing.

(a) If, under § 115.7(b), (d) (e) or (f) or § 115.8(b), (c), or (d), the disbursement of funds to an account holder is restricted, or it is proposed that these funds be used to pay creditors, the account holder must be notified in writing as follows:

(1) Notice must be given at the commencement of the restrictions or at least 40 calendar days prior to the proposed disbursement of funds from the IIM account.

(2) The notice must state the reasons for the restrictions or proposed disbursement.

(3) The notice shall inform the account holder of the right to a hearing and that a written request for a hearing must be received by the Secretary within 30 calendar days of the account holder's receiving the notice of the proposed action.

(4) The notice of proposed action shall be delivered to the account holder in person, by Certified Mail-Return Receipt Requested, or if this is not possible, it shall be published in a newspaper of general circulation likely to be accessible to the account holder. The date indicating delivery of the notice, which shall commence the 40 or 30 day periods, shall be confirmed by one of the following:

(i) Signed receipt;

(ii) Affidavit of delivery; or

(iii) Publication in a newspaper of general circulation if personal delivery cannot be made.

(5) The notice shall include a statement of the rights listed in paragraph (c) of this section.

(6) The notice shall advise that, if the account holder wishes to have the delinquent debt or money judgment paid without delay and without a hearing, he/she can sign a form furnished with the notice.

(7) If the amount of funds in account holder's IIM account exceeds the amount to be disbursed in accordance with the notice, the excess shall be disbursed to the account holder without delay.

(b) If the account holder fails to request a hearing within 30 days, he/she is deemed to consent to the restrictions on the disbursement of funds from the IIM account and to the disbursement, if any, in accordance with the notice.

(c) The Secretary shall conduct a hearing, if requested as specified above, to determine whether to continue the restrictions on disbursement, and/or allow disbursements in accordance with the notice. The following are requirements for a fair and equitable hearing in accordance with 25 USC 164, 165:

(1) The hearing shall be held within ten (10) working days of the Secretary's receipt of the account holder's request for a hearing.

(2) The account holder shall be given the opportunity to be heard orally and/or in writing.

(3) The account holder shall be allowed: to hear the case for the proposed action; to present testimony, arguments, and evidence; to present witnesses, and to question and rebut opposing witnesses.

(4) The account holder may be heard on why the restrictions on disbursement, and/or disbursement in accordance with the notice, should not be made. The account holder may not re-litigate the facts and circumstances giving rise to the restrictions on his/her IIM account.

(5) The account holder may retain an attorney or other representative at his/her expense.

(6) The decision to uphold or overturn the proposed action shall be made by the Secretary and must be based upon information presented or referred to at the hearing.

(7) The Secretary shall make provisions for recording the hearing and shall preserve the record for the duration of any applicable appeal process. Tape recording the hearing is sufficient.

(8) The decision of the Secretary shall be provided in writing to all parties concerned within ten working days following the hearing.

(d) No funds, except as provided in subsection (b) of this section, shall be paid or disbursed from an IIM account or applied against a debt, or a judgment of a tribal court or court of Indian offenses, until the decision has become final in accordance with the appeal procedures provided for in § 115.14.

§ 115.13 Assets of members of the Agua Caliente Band of Cahuilla Indians.

(a) The Secretary is authorized, in his/her discretion, to invest funds of members of the Agua Caliente Band of Cahuilla Indians in accordance with 25 U.S.C. 954(e).

(b) The provisions of this section apply to money or other personal property held by the United States in trust for members of the Agua Caliente Band of Cahuilla Indians, which, with the consent of its members, may be used, advanced, expended, exchanged, deposited, disposed of, invested, and reinvested by the officer in charge of the Palm Springs office, Bureau of Indian Affairs, in accordance with 25 U.S.C. 954(e). Consent shall not be required if the Secretary determines a member to be incompetent by reason of minority or otherwise, or where the estate of a deceased member remains unprobated.

(c) An adult member of the Agua Caliente Band shall be presumed competent unless and until proven incompetent in accordance with the procedures in this section.

(1) When the Secretary believes, based upon relevant and reliable evidence, that an adult member of the Agua Caliente Band is incompetent to participate in the management of funds, the Secretary shall request the Director, Office of Hearings and Appeals, to appoint an Administrative Law Judge to conduct a hearing for the purpose of determining the competency of the member.

(2) At the same time the hearing request is made to the Office of Hearings and Appeals, the Secretary shall provide notice to the member that a hearing is being requested. The notice shall be in writing and shall be served on the member, personally or by certified mail. The Secretary shall assist the member in preparing for the hearing, and shall assist him/her to retain an attorney, at the member's expense, if he/she wishes to be represented by counsel.

(3) The Administrative Law Judge shall conduct a hearing in the State of California within sixty days of the date of notice, unless the member requests and/or consents to a reasonable alternative place and/or date. The hearing shall be conducted in accordance with the requirements of the Administrative Procedure Act, 5 U.S.C. 554. The burden of proving incompetency of the member shall be on the Secretary.

(4) Within 30 days after the hearing, the Administrative Law Judge shall submit a recommended decision as to the member's incompetency and shall transmit it, together with the record of the proceedings, including the hearing transcript, to the Board of Indian Appeals. Within 90 days of receipt of the recommended decision and record, the Board of Indian Appeals shall render a decision on the member's competency, based upon federal law, which shall be final for the Department of the Interior.

(5) Following a final Departmental determination that a member is incompetent, the member's consent shall not be a condition to the Secretary's use, advance, expenditure, exchange, deposit, disposal, investment, or reinvestment of the member's funds.

(d) Investments made by the Secretary shall be limited to those investments of principal and interest that are guaranteed by the United States as provided in 25 U.S.C. 162a.

(e) The investment of funds in a deceased member's estate account shall be limited to periods of one year or less.

§ 115.14 Appeals.

Appeals from an action taken by an official of the Bureau of Indian Affairs may be taken pursuant to 25 CFR Part 2, subject to the terms of § 115.12 where applicable.

Ada E. Deer,

Assistant Secretary—Indian Affairs.

[FR Doc. 94–19660 Filed 8–12–94; 8:45 am]

BILLING CODE 4310–02–P

federal register

Monday
August 15, 1994

Part IX

Department of Energy

10 CFR Part 766

Uranium Enrichment Decontamination and Decommissioning Fund; Procedures for Special Assessment of Domestic Utilities; Final Rule

DEPARTMENT OF ENERGY

10 CFR Part 766

RIN 1901–AA52

Uranium Enrichment Decontamination and Decommissioning Fund; Procedures for Special Assessment of Domestic Utilities

AGENCY: Office of Environmental Management, Department of Energy.

ACTION: Final rule.

SUMMARY: This final rule revises the procedures and methods that the Department of Energy (DOE or the Department), Office of Environmental Management, will use to invoice and collect a Special Assessment from domestic utilities. The assessments will be deposited into the Uranium Enrichment Decontamination and Decommissioning Fund (Fund), established under Chapter 28 of the Atomic Energy Act of 1954 (Act), as amended by Title XI of the Energy Policy Act of 1992 (EPACT). The Fund will be used to pay for the costs of decontamination and decommissioning (D&D) and remedial action activities at DOE's uranium enrichment facilities, and for reimbursement of certain costs of D&D, reclamation, and other remedial actions incurred by licensees at active uranium or thorium processing sites, as specified in Title X of the EPACT.

EFFECTIVE DATE: September 14, 1994.

FOR FURTHER INFORMATION CONTACT: Ross Bradley, U.S. Department of Energy, Uranium Enrichment Decontamination and Decommissioning Fund Manager, Mail Stop EM–42, 1000 Independence Ave., SW, Washington, DC, 20585, (301) 903–7646; or Edward Le Duc, U.S. Department of Energy, Office of General Counsel, Mail Stop GC–51, 1000 Independence Ave., SW., Washington, DC, 20585, (202) 586–6947.

SUPPLEMENTARY INFORMATION:

I. Background
II. The Interim Final Rule and the Proposed Rule
III. Response to Public Comment
A. Detailed Listing of Activities to be Paid from the Fund
B. Definition of Commercial Electricity Generation
C. Treatment of SWUs in Leased Material in Calculating the Special Assessment
D. Calculation of Future Assessments
E. Treatment of DOE Produced SWUs Re-Entering the U.S. Domestic Market in Calculation of the Special Assessment
F. Treatment of Fabrication Losses in Calculation of the Special Assessment
G. Treatment of SWUs Sold to Domestic Utilities That Shut Down Their Nuclear Power Plants Prior to Enactment of the EPACT
H. Treatment of SWUs Sold to Another Domestic Utility at a Different Tails Assay in Calculation of the Special Assessment
I. Treatment of SWUs Traded or Loaned in Calculation of the Special Assessment
J. Invoicing of the Special Assessment in Proportion to U.S. Congressional Appropriations to the Fund
K. Payment Schedule for Future Assessments
L. Fixed Annual Date for Invoicing
M. Payment of the Special Assessment for Utilities Transferring All of Their SWUs to Another Domestic Utility
N. Submittal of Special Assessment Payment after Approval from Public Utility Commissions
O. Establishment of a D&D Trust Fund Managed by the Domestic Utilities
P. Payment of Interest on Credits to future Special Assessments
Q. Method of Payment
R. Reconciliation Adjustments and Appeals
S. Prepayment of Special Assessments
T. Miscellaneous Comments
U. Review Under Executive Order 12866
V. Review Under the Paperwork Reduction Act
IV. Section-By-Section Analysis
A. Subpart A—General
1. §§766.1 and 766.2 Purpose and Applicability
2. § 766.3 Definitions
B. Subpart B—Uranium Enrichment Decontamination and Decommissioning Fund; Procedures for Special Assessment of Domestic Utilities
1. § 766.101 Data Utilization
2. § 766.102 Calculation Methodology
3. § 766.103 Special Assessment Invoices
4. § 766.104 Reconciliation Adjustments and Appeals
5. § 766.105 Payment Procedures
6. § 766.106 Late Payment Fees
7. § 766.107 Prepayment of Special Assessments.
V. Review Under Executive Order 12866
VI. Review Under the Regulatory Flexibility Act
VII. Review Under the Paperwork Reduction Act
VIII. Review Under the National Environmental Policy Act
IX. Review Under Executive Order 12612
X. Review Under Executive Order 12778

I. Background

Sections 1801, 1802 and 1803 were added to the Act by Title XI of the EPACT (Pub. L. 102–486). Section 1801 establishes the Fund in the Treasury of the United States (42 U.S.C. § 2297g). Amounts on deposit in the Fund are available to the Secretary of Energy, subject to appropriations, for D&D and remedial action activities at DOE's uranium enrichment facilities and for reimbursement of uranium and thorium licensees for certain costs of D&D, reclamation, and other remedial actions incurred by licensees at active uranium or thorium processing sites, as specified in Title X of the EPACT (42 U.S.C. § 2296a *et seq.*). The Act provides that amounts in the Fund be invested by the Secretary of the Treasury in obligations of the United States. The Act also requires the Secretary of the Treasury, after consultation with the Secretary of Energy, to report to Congress annually on the financial condition and operations of the Fund.

Section 1802 of the Act provides that the Fund shall consist of annual deposits of $480 million per fiscal year, to be annually adjusted for inflation using the Department of Labor's Consumer Price Index for all-urban consumers (CPI–U)(42 U.S.C. § 2297g–1(a)). Deposits to the Fund are required to include a Special Assessment on domestic utilities not to exceed $150 million per fiscal year (adjusted for inflation using the CPI–U). Section 1802 also authorizes appropriations to be deposited into the Fund in the amount necessary to ensure that the total annual amount of $480 million (adjusted for inflation using the CPI–U) is deposited (42 U.S.C. § 2297g–1(b)). The amount collected from each domestic utility for the Special Assessment shall be in the same ratio to the total amount to be deposited in the Fund, for each fiscal year, as the total amount of separative work units (SWUs) the utility has purchased from DOE for the purpose of commercial electricity generation, prior to the date of enactment of the EPACT (October 24, 1992), bears to the total amount of SWUs purchased from DOE for all purposes, including units purchased or produced for defense purposes, prior to October 24, 1992 (42 U.S.C. § 2297g–1(c)).

Collection of the Special Assessment is authorized as of the date of enactment of the EPACT (October 24, 1992), and shall continue for a period of the earlier of 15 years or until $2.25 billion (adjusted for inflation using the CPI–U) has been collected (42 U.S.C. § 2297g–1(e)). A Special Assessment levied on domestic utilities is deemed by the Act to be a necessary and reasonable current cost of fuel, fully recoverable in a utility's rates in the same manner as other fuel costs (42 U.S.C. § 2297 g–1(g)).

Section 1803 provides that the National Academy of Sciences shall conduct a study and provide recommendations for reducing the costs associated with D&D of the Department's uranium enrichment facilities, and report its finding to Congress within 3 years after the date of the enactment of EPACT (42 U.S.C. § 2297g–2(a)). This section specifies that the costs of D&D activities are to be paid from the Fund until such time as the

Secretary of Energy certifies, and the Congress concurs, that the activities are complete (42 U.S.C. § 2297g–2(b)). This section also specifies that the annual costs of remedial action at DOE's uranium enrichment facilities shall be paid from the Fund to the extent the amount available in the Fund is sufficient (42 U.S.C. § 2297g–2(c)).

II. The Interim Final Rule and the Proposed Rule

On August 2, 1993, DOE published an interim final rule (58 FR 41160) and a proposed rule (58 FR 41164) which set forth the procedures for calculation and collection of the Special Assessment from domestic utilities for deposit into the Fund.

The interim final rule became effective on September 1, 1993. This rule revises part 766 by including amendments from the proposed rule and adding a new section on prepayments.

The interim final rule set forth those procedures, which the EPACT does not leave to DOE discretion, for calculation of the Special Assessment from domestic utilities for deposit into the Fund. DOE issued the rule as an interim final rule to allow for public comment while facilitating timely administrative action to comply with the obligation to collect the Fiscal Year 1993 Special Assessment from utilities by no later than September 30, 1993. The proposed rule expanded the interim final rule by adding new sections that address substantive matters left by the EPACT to DOE discretion, such as the required method of payment, late payment fees, and administrative appeals.

On August 30, 1993, a public hearing was conducted by DOE on the proposed rule. No attendees asked to make oral presentations. A transcript of this hearing is available in the Freedom of Information Public Reading Room, 1000 Independence Avenue, Washington, DC 20885.

During the public comment period, written comments on the interim final rule were received from a total of nine organizations representing domestic utilities, electric power industry groups, and Congress. Written comments were received on the proposed rule from seven organizations with the same affiliations.

DOE has considered and evaluated the comments received during the public comment period. In addition, DOE has addressed comments from two utilities it received outside the public comment period. The following discussion describes the comments received, provides DOE's response to the comments, and describes any changes incorporated into the rule.

III. Response to Public Comment

A. Detailed Listing of Activities To Be Paid From the Fund

Several commenters requested that DOE provide a detailed listing of the activities at the gaseous diffusion plants that are to be paid from the Fund. Activities that are to be paid from the Fund are those that are authorized by the EPACT and subsequently approved by Congress in appropriation bills. A listing of these activities and other pertinent information is annually released to the public by the DOE in the Office of Environmental Management's annual budget documentation. Because this information is prepared and modified annually, and is made available to the public, the final rule does not include a detailed listing of all activities that are to be paid from the Fund. However, the following are examples of the types of activities at the gaseous diffusion plants that DOE believes would appropriately be paid for from the Fund: demolition of buildings, Resource Conservation and Recovery Act closures and surveillance and maintenance activities.

B. Definition of Commercial Electricity Generation

Several commenters requested that DOE provide a definition of "commercial electricity generation." This term was not defined in the EPACT. Given that the amount collected from a utility is based upon its purchases of SWUs for the purpose of commercial electricity generation, DOE has added a definition to the final rule.

Commercial electricity generation means the production of electricity for sale to consumers. Power produced under the power demonstration program operated by the Atomic Energy Commission (AEC) falls within the definition of commercial electricity generation. However, SWU deliveries to reactors wholly owned by the AEC under the power demonstration program, even though they fall within the definition of commercial electricity generation, are considered deliveries of SWUs to the government and not to domestic utilities, since domestic utilities did not purchase these SWUs from DOE or its predecessor agency the AEC. Therefore, they will not be included in the calculation for domestic utilities, but will be included in the calculation for total SWUs produced.

C. Treatment of SWUs in Leased Material in Calculating the Special Assessment

One commenter requested clarification concerning the treatment of SWUs in leased material in the calculation of the Special Assessment. The commenter suggested that the use of leased SWU material in calculating the Special Assessment would overstate its Special Assessment and would be inappropriate because unused portions of leased material were returned to the Government.

Leased material is appropriately included as part of the Special Assessment to the extent that the material was for the purpose of commercial electricity generation. Utilities paid "use and burnup charges" for the portion of leased material that they consumed. These charges were based on the number of SWUs consumed. Therefore, leased material is being treated as purchased material and is subject to the Special Assessment. A utility's Special Assessment will be adjusted for those portions of SWUs in leased material that it did not consume and that were returned to the Government. In addition, DOE has added a definition of "use and burnup charges" to the final rule.

Domestic utilities converted lease contracts to "in-situ" ownership contracts when the Atomic Energy Act was amended to allow private ownership of special nuclear materials. The original Special Assessment invoices included SWUs delivered under lease contracts and under "in-situ" contracts. Several commenters noted that the SWUs in these assessments were double counted as a result of SWUs being counted as lease deliveries and in-situ deliveries. DOE agrees with these comments. The Fiscal Year 1994 Special Assessment invoices will be adjusted to correct for this double counting.

D. Calculation of Future Assessments

Several commenters observed that the EPACT states that the Special Assessment should be "annually adjusted for inflation" and that the final rule should reflect this requirement and indicate when the inflation adjustments will commence. The final rule specifies that the annual Special Assessment shall be adjusted for inflation each fiscal year following the first Special Assessment using the most recently published monthly Consumer Price Index for all urban consumers (CPI–U) published by the Department of Labor and the CPI–U for October, 1992. (See section 766.102(d)). DOE believes that

this provision, which establishes an adjustment for inflation on each annual assessment following the first Special Assessment, appropriately implements the inflation adjustment requirement of EPACT. DOE waived the inflation adjustment to the first Special Assessment because domestic utilities had no control over the date of the issuance of the interim final rule, which established the date of the first Special Assessment.

E. Treatment of DOE Produced SWUs Re-Entering the U.S. Domestic Market in Calculation of the Special Assessment

One commenter requested clarification as to how DOE plans to treat any DOE produced SWUs that were sold to foreign utilities and that re-enter the domestic market. This commenter questioned how this would affect the reconciliation of SWU records for recalculating the Special Assessment.

During the reconciliation process, DOE will identify these SWUs from information provided by utilities and from other sources to which DOE has access, such as the Nuclear Materials Management and Safeguards System (NMMSS), a joint DOE-Nuclear Regulatory Commission (NRC) database. DOE-produced SWUs that were sold to foreign utilities and later re-entered the domestic commercial market would have the effect of increasing the number of DOE-produced SWUs purchased by domestic utilities for the purpose of commercial electricity generation in relation to the total number of DOE-produced SWUs purchased from DOE for all purposes, as stated in the EPACT. The Special Assessment invoices will contain information on the total number of DOE-produced SWUs purchased by domestic utilities, including those purchased from foreign utilities. When the reconciliation process is complete, DOE will provide utilities with a summary of all adjustments made during the process.

F. Treatment of Fabrication Losses in Calculation of the Special Assessment

Several commenters requested clarification as to how DOE will treat fabrication losses in calculating the Special Assessment. The commenters stated that fuel fabrication losses were not used in commercial electricity generation and therefore should not be included in the calculation of the Special Assessments.

In determining a utility's Special Assessment, the EPACT does not require a SWU to have actually been used in commercial electricity generation, but only to have been purchased for that purpose. Therefore, DOE will not adjust Special Assessments to exclude fabrication losses.

G. Treatment of SWUs Sold to Domestic Utilities That Shut Down Their Nuclear Power Plants Prior to Enactment of the EPACT

Several commenters questioned the applicability of the Special Assessment to reactors that have ceased operations or are scheduled for shut down during the 15-year assessment period. The commenters asserted that the intent of EPACT is to levy Special Assessments only upon operating domestic utilities. Relying on EPACT's statement that a utility may recover the cost of its Special Assessment as a "current cost of fuel * * * recoverable * * * in the same manner as the utility's other fuel cost," 42 U.S.C. § 2297g–1(g), one commenter argued that Congress intended to exempt non-operating facilities. This language, according to the commenter, suggests a Congressional intent to subject a utility to the Special Assessment only if it has at least one operating facility, by which it incurs "other fuel cost."

DOE believes that the EPACT is unambiguous in regard to the statutory applicability of the Special Assessment to domestic utilities. The statutory provision governing application of the Special Assessment is 42 U.S.C. § 2297g–1(c). This section states that: "The Secretary shall collect a special assessment from domestic utilities," and that the amount collected from each utility shall be proportional to the "total amount of separative work units such utility has purchased from the Department of Energy for the purpose of commercial electricity generation, before October 24, 1992." If prior to October 24, 1992, a utility purchased SWUs from DOE for the purpose of commercial electricity generation, EPACT's plain terms subject such a utility to the Special Assessment. EPACT provides no exceptions for utilities that satisfy this condition of applicability.

One commenter points to a separate provision on rate recoverability as the basis for implying an exemption from the Special Assessment. DOE does not believe that the provision in EPACT authorizing a utility's rate recovery of its Special Assessments, 42 U.S.C. § 2297g–1(g), was intended by Congress to be a limitation on the statutory applicability of the Special Assessments. The terms of this provision, entitled "Treatment of Assessment," do not purport to create an exemption or to address the scope of applicability of the Special Assessment. The terms and separate placement of the rate recovery provision reflect its separate purpose, namely, to allow utilities to pass through the costs of their Special Assessments.

We note that the statutory structure contemplates that current ratepayers will bear costs related to fuels that benefitted ratepayers years earlier. Congress apparently recognized this as a potential ratemaking issue, and thus directed that the present ratepayers of the utilities that benefitted from the fuel use would pay the Special Assessments.

Accordingly, because the EPACT contains no exemption from the Special Assessment for non-operating reactors, DOE has not exempted non-operating reactors in this final rule.

H. Treatment of SWUs Sold to Another Domestic Utility at a Different Tails Assay in Calculation of the Special Assessment

One commenter requested that DOE address how it would treat enrichment services that were purchased from DOE and subsequently sold to another utility at a different transaction tails assay that resulted in a net difference in SWUs.

If a utility purchased DOE-produced SWUs from another utility, the purchasing utility's assessment will be based on the SWUs specified in contracts or other probative documents generated at the time of the secondary market purchase. The selling utility's assessment will be reduced by an amount that will be determined by the SWUs sold to the purchasing utility. For instance, in the event that the SWUs purchased in the secondary market transactions were less than the SWUs originally purchased from DOE, the selling utility will be assessed for the difference. If a transaction resulted in a net increase in SWUs, the purchasing utility will be assessed only for the amount of SWUs originally purchased from DOE; the selling utility's assessment will be reduced by the same amount. In general, where a secondary market sale resulted in a net difference in SWUs, there will be no increase or decrease, for Special Assessment purposes, in the total number of SWUs purchased from DOE. The Department bases this principle on its interpretation of EPACT, which requires Special Assessments to be determined on the basis of the total SWUs purchased from DOE by domestic utilities for the purpose of commercial electricity generation. To implement this requirement, DOE believes that secondary market transactions cannot be allowed to effect a net increase or decrease, for Special Assessment purposes, in the total number of SWUs

that were purchased from DOE for all purposes. The following examples illustrate this principle:

1. Utility A purchases 100 SWUs from DOE. Utility A's assessment would be based upon 100 SWUs.
2. Utility A purchases 100 SWUs from DOE. Utility A sells this material to Utility B in a transaction based on the same calculated number of SWUs. Utility B's assessment would be based upon 100 SWUs. Utility A's assessment would be based upon 0 SWUs.
3. Utility A purchases 100 SWUs from DOE. In a subsequent sale, Utility A changes the calculated SWUs and sells the 100 SWUs to Utility B in a transaction for only 80 SWUs. Utility B's assessment is based upon 80 SWUs. Utility A's assessment is based upon the remaining 20 SWUs unaccounted for in the secondary market transaction.
4. Utility A purchases 100 SWUs from DOE. In a subsequent sale, Utility A changes the calculated SWUs and sells the 100 SWUs to Utility B in a transaction for 120 SWUs. Utility B's assessment is based upon 100 SWUs, and Utility A's assessment is based upon 0 SWUs.

Requests for assessment adjustments reflecting secondary market SWU transactions may be made pursuant to the requirements of section 766.104. The liability for payment of the Special Assessment rests with the utility that originally purchased the SWUs from DOE, until such time that DOE makes a written determination granting or denying a requested adjustment pursuant to section 766.104(c). Such a determination must be based upon reliable and adequately probative information documenting the sale of the SWUs in question. DOE will use this information to reconcile its records of SWU purchases with both sellers and purchasers.

I. Treatment of SWUs Traded or Loaned in Calculation of the Special Assessment

One commenter requested that definitions for the terms "purchased" and "sold" be incorporated into the final rule, and that these terms be clearly defined to include enriched uranium trades and loans as purchases and sales.

DOE has not included a definition of purchased and sold in the final rule because EPACT sufficiently describes these terms. The EPACT specifies that a utility is considered to have purchased a separative work unit from DOE if such separative work unit was produced by DOE, but purchased from another source; and a utility shall not be considered to have purchased a separative work unit from DOE if such separative work unit was purchased by the utility, but sold to another source.

On a case by case basis, uranium enrichment trades and loans of SWUs will be considered for treatment as purchases for assessment purposes when probative and reliable documentation is provided under the reconciliation provisions set forth at section 766.104, and DOE determines that a particular trade or loan transaction constitutes a purchase pursuant to the requirements of the EPACT.

J. Invoicing of the Special Assessment in Proportion to U.S. Congressional Appropriations to the Fund

The EPACT specifies that the annual Special Assessment of domestic utilities "shall not exceed" $150 million of the total $480 million in annual deposits to the Fund. One commenter stated that the ratio (.4545) of the maximum amount of Special Assessments ($150 million) to the total amount of government deposits ($330 million) represents the maximum percentage of total deposits the utilities can be assessed in a given fiscal year. This percentage should be applied against the Federal Government contributions to the Fund to determine the ceiling for each annual Special Assessment of domestic utilities. For example, if the Federal Government contributes $100 million in a given fiscal year, the utility contribution should be $45.45 million ($100 million x .4545). The commenter contended that use of this capping method would make the domestic utility contributions to the Fund proportional to those made by the Federal Government and would eliminate the possibility of utility over-subscription to the Fund.

EPACT authorizes the Department to collect a Special Assessment from domestic utilities up to $150 million per fiscal year without any requirement for proportionality between the Federal Government and utility contributions that are actually made to the Fund. Therefore, DOE will not impose an annually adjusted ceiling on the Fund or a requirement for actual proportionality between the two Fund sources.

K. Payment Schedule for Future Assessments

Several commenters expressed concern over the condensed payment schedule for payment of the Special Assessment in Fiscal Years 1993, 1994, and 1995. These commenters contended that this payment schedule presents an unfair burden on domestic utilities, and may make it difficult for utilities to obtain full rate recovery of the Special Assessment.

DOE accommodated this concern in the proposed rule in stating that "Fiscal Year 1994 invoicing will be postponed two quarters to accommodate the reconciliation of records." This delay also allows for more time between the Fiscal Year 1993 and Fiscal Year 1994 Special Assessments. In addition, the EPACT affords utilities full rate recovery protection without regard to the timing of payments (42 U.S.C. § 2297g–1(g)).

L. Fixed Annual Date for Invoicing

Several commenters expressed the need for a fixed date for invoicing of the Special Assessment to allow domestic utilities to plan for payment of the Special Assessment. DOE has modified the final rule to accommodate this concern. The final rule provides for annual invoicing of the Special Assessment on or about October 1 of each fiscal year with payment due 30 calendar days from the date of invoice, beginning with the Fiscal Year 1995 Special Assessment.

M. Payment of the Special Assessment for Utilities Transferring All of Their SWUs to Another Domestic Utility

One commenter recommended an exemption from payment of the Special Assessment for utilities that transferred, or plan to transfer, their entire portfolio of SWUs to other domestic utilities.

EPACT requires the Special Assessment to be calculated on the basis of SWUs purchased from DOE prior to the date of enactment of the legislation. Therefore, domestic utilities shall be liable for the Special Assessment based upon SWUs purchased prior to the date of enactment without regard to potential or actual transfers of SWU portfolios, except that transfers that were a result of sales made prior to the date of enactment will be treated as adjustments to a utility's assessment during reconciliation, in accordance with the requirements set forth in section 766.104. See Section R.

N. Submittal of Special Assessment Payment After Approval From Public Utility Commissions

One commenter requested that utilities be allowed to submit their payments of the Special Assessment after regulatory approval is obtained from their public utility commission for rate recovery of these costs. There is no basis for such a contingency in the

EPACT. The EPACT requires DOE to assess and collect an annual Special Assessment and provides for separate utility rate recovery of the assessments as a current cost of fuel. Making payment contingent upon a public utility commission's approval of Special Assessment costs could lead to undue delay in the collection of the Special Assessments and lost interest income for the Department. This delay could also cause DOE to risk violating EPACT by collecting more in a given fiscal year than the $150 million that is authorized, since DOE would lose control over the timing of collections. Therefore, DOE will not permit a delay in payment pending public utility commission cost recovery authorization.

O. Establishment of a D&D Trust Fund Managed by the Domestic Utilities

Several commenters requested that the annual Special Assessments, once collected, be placed into a Trust Fund to be managed by the domestic utilities. These commenters stated that such an arrangement would demonstrate prudence to rate regulators, and enable utilities to provide greater cost-control assurance to their customers.

The EPACT requires that the Fund be established in the Treasury of the United States, and that amounts contained in the Fund be invested by the Secretary of the Treasury in obligations of the United States. (42 U.S.C. § 2297g). Since the EPACT does not leave management of the Fund to DOE discretion, the Department cannot establish a utility managed trust fund.

P. Payment of Interest on Credits to Future Special Assessments

Several commenters expressed concern about the inability of domestic utilities to recover interest on any credits to future Special Assessments as a result of changes to utility Special Assessments from the reconciliation process. In the absence of specific authority, DOE cannot pay interest. The EPACT provides no authority for the payment of interest on credits or refunds made to utilities. However, DOE expects the majority of credits to Special Assessments to be completed in Fiscal Year 1994 as a result of the reconciliation process.

Q. Method of Payment

One commenter requested that DOE modify the final rule, which requires payment to be made by wire transfer, to allow domestic utilities to make payment of the Special Assessment by other electronic funds transfer methods.

The final rule continues to specify wire transfer as the method of payment because this is the only electronic method accepted by the Department of Treasury. This method is consistent with payment methods already in use and familiar to domestic utilities. DOE is currently investigating the use of the Automated Clearing House method of payment with the Department of Treasury. Should this collection procedure become available, DOE may propose modification to this rule to reflect the change.

R. Reconciliation Adjustments and Appeals

Several commenters remarked that thirty days from the date of a Special Assessment invoice was insufficient time to file a notice requesting an invoice adjustment. One of the commenters recommended that DOE clarify the phrase in section 766.104(a) "* * * filing of the notice is complete only upon receipt by DOE." The commenter was concerned that this language could be construed to mean that filing of a notice is only complete when DOE deems the documentation supplied with such notice to be acceptable. DOE believes that thirty days is sufficient time to file a notice requesting adjustment. The final rule clarifies that domestic utilities are considered to have met the 30-day filing deadline upon receipt by DOE of the notice requesting an adjustment, and not contingent upon acceptance of supporting documentation by DOE. If more time is needed to gather probative information, DOE will consider utility requests for additional time, up to 90 days, to gather the necessary information based on a showing of need.

One commenter requested that DOE provide guidelines for verification of transactions involving non-utilities and foreign utilities, and for the recalculation of utility assessments and the notification of changes in assessments. DOE does not believe that guidelines would be helpful for these purposes because the use of reliable and probative documentation, provided by selling and purchasing utilities and other sources, would be adequate and would provide flexibility in accomplishing the purpose of the reconciliation process.

One domestic utility requested that DOE amend the Section-by-Section Analysis in the interim final rule to clarify that DOE is giving equal weight to the seller's and purchaser's documentation submitted in the reconciliation process. DOE has amended section 766.104 and the Section-by-Section Analysis to reflect this request.

DOE has also amended the final rule to allow the Department to acquire probative documentation that may not reside with the Department or with a domestic utility, if the Department believes that such information would be useful for reconciliation of SWU records. During the reconciliation process, DOE will provide to the affected utilities the substance of any data obtained from other sources, but may withhold the source of the information consistent with applicable confidentiality requirements.

One commenter was concerned that DOE had not provided for refunds of over-payments of Special Assessments. The final rule provides for refunds of Special Assessment payments in cases where it is determined that an over-payment has been made, with the exception of FY 1993 invoices. For FY 1993, DOE has already issued credits or refunds as appropriate.

S. Prepayment of Special Assessments

Subsequent to the comment period, one domestic utility requested to prepay future year Special Assessments. For convenience and expediency, DOE agrees to accommodate this request and has added to the final rule a new section 766.107 permitting prepayments. However, DOE will apply only the pro-rata share of any prepayment to a given fiscal year to ensure that the total Special Assessment for any fiscal year does not exceed $150 million (adjusted for inflation).

T. Miscellaneous Comments

One commenter requested that section 766.1 be revised.to read as follows: "The provisions of this part establish policies applicable to administration of the Fund established by sections 1801, 1802, and 1803 of the Act as amended." DOE has revised the final rule to reflect this request.

Another commenter requested that a definition for the term "delivery" be included in the final rule, asserting that unused SWU credits held by a utility should not be considered deliveries for purposes of determining the utility's SWU purchases. DOE does not believe a definition of delivery is necessary because it is relying upon the Toll Enrichment Services System (TESS), which is defined in the final rule. The TESS does not define the term delivery but includes data on SWU deliveries to domestic utilities. DOE intends to use TESS data in determining SWU deliveries for purposes of determining SWU purchases from DOE. As appropriate, DOE will modify the application of TESS data for any

discrepancies or further transactions raised during the reconciliation process.

One commenter requested DOE to insert the word "commercial" immediately before "electricity generation" in the definition of Domestic Utility. This comment is consistent with the EPACT, and DOE has revised the final rule to incorporate the change.

Two commenters requested that the number of significant digits used in calculating the Special Assessment be specified in the final rule. The final rule has been modified to specify that five significant digits will be used in the calculation of the Special Assessment.

In addition to the changes made in response to comments, DOE has also made a number of clarifying editorial changes in the final rule.

U. Review Under Executive Order 12866

Several commenters addressed DOE's decision not to consider the final rule as a major rule under Executive Order 12291 (recently replaced by Executive Order 12866). The commenters believe that the annual Special Assessment of $150 million appears to satisfy the criteria for a major rule, or in the case of Executive Order 12866 a significant regulatory action, having an effect of over $100 million on the economy. While the assessments to be paid by members of the electric utility industry will exceed $100 million annually, and may even be considered a major cost to the industry, these costs are not the result of any exercise of DOE's discretion in this final rule, but rather are specifically imposed by EPACT. After consultation with the Office of Management and Budget, DOE has determined the final rule is not a significant regulatory action.

V. Review Under the Paperwork Reduction Act

Many commenters stated that the final rule imposes an additional paperwork burden on the public, and that hundreds of hours have already been spent in additional paperwork in response to this rule. In consultation with the Office of Management and Budget (OMB), DOE has determined, under the Paperwork Reduction Act (44 U.S.C. § 3501 *et seq.*), that the final rule imposes relatively minimal additional paperwork burden on the public. Therefore, DOE will not amend the rule's information collection requirements.

IV. Section by Section Analysis

A. Subpart A—General

1. Sections 766.1 and 766.2 Purpose and Applicability

Section 766.1 specifies that the purpose of this rule is to establish procedures for the Special Assessment of domestic utilities for the Fund pursuant to sections 1801, 1802 and 1803 of the Act. Section 766.2 describes the applicability of the rule, stating that it applies to all domestic utilities in the United States that purchased SWUs from the Department between 1945 and October 23, 1992.

2. Section 766.3 Definitions

Section 766.3 sets forth pertinent definitions applicable to Part 766. DOE has added definitions for "commercial electricity generation" and "use and burnup charges."

B. Subpart B—Procedures for the Special Assessment for the Uranium Enrichment Decontamination and Decommissioning Fund

1. Section 766.101 Data Utilization

Section 766.101 identifies the records upon which the determination of the SWUs purchased for domestic, foreign, and defense purposes shall be based. An audit was completed on records in DOE's possession on July 19, 1993, by an independent accounting firm prior to initial billing. These records reflect all SWUs produced and delivered by DOE (or DOE's predecessor agencies) from 1945 to October 23, 1992. These records reflect initial production and delivery of SWUs, and do not reflect subsequent transactions involving DOE SWUs by domestic utilities. Accordingly, DOE may also use privately held, reliable, and probative records of SWU transactions. Access to DOE records is subject to generally applicable laws and regulations governing classified and sensitive unclassified information and materials. Requests for confidential treatment of business records submitted to DOE are subject to 10 CFR Part 1004.

2. Section 766.102 Calculation Methodology

Section 766.102 describes the method for calculating Special Assessments. It is based on the formula described in the text of the Act. The rule has been modified so that all calculations will be carried to five significant digits.

3. Section 766.103 Special Assessment Invoices

Section 766.103 addresses the billing of the Special Assessments. DOE issued Fiscal Year 1993 invoices in September 1993, along with a summary of supporting information as described in paragraph (b) of section 766.103. Under paragraph (c), DOE will issue similar invoices in future fiscal years and update supporting information as appropriate.

4. Section 766.104 Reconciliation, Adjustments, and Appeals

Section 766.104 outlines procedures that must be followed by domestic utilities when seeking adjustments of invoices. DOE anticipates that this procedure will be used most often with respect to the Fiscal Year 1993 Special Assessment as domestic utilities present records of secondary market SWU transactions for reconciliation of the allocation of SWUs. Following reconciliation of records, DOE will provide, in appropriate cases, refunds or additional assessments. Determinations under section 766.104 will serve as precedents, and may be the basis for summary determinations for repetitious claims filed in the years following Fiscal Year 1993.

During the administrative reconciliation process, each domestic utility will have the opportunity to question the allocation of SWUs that was the basis of the Special Assessment, and DOE will have the opportunity to adjust the allocation of SWUs based on probative information it obtains from other sources. In most instances, documentary evidence of SWU transactions, in the nature of resales or purchases of DOE SWUs from other sources, is in the possession of domestic utilities or other parties involved in the secondary market. Domestic utilities will be responsible for raising the issue of resales and purchases and should be prepared to respond to any questions regarding their records of resales and purchases; however, DOE may rely on information from other sources, if it is reliable and adequately probative of the transactions documented, to validate the content of utility records. DOE shall attempt to verify all claims with corroborating documentation provided by both the seller and purchaser. In order to obtain corroborating evidence, DOE may rely on its subpoena authority pursuant to section 161(c) of the Act. DOE may also seek relevant data from the Nuclear Regulatory Commission's NMMSS. DOE may give greater weight to documents that were prepared contemporaneously with the purchase or sale of SWUs, although other documentation will be considered. As appropriate, DOE will modify its application of TESS data for discrepancies and additional transactions raised during the reconciliation process.

DOE considered the possibility of delaying the requirement to make payments until reconciliation of records is complete, but rejected such a

procedure because the time required to reconcile records would have unduly delayed the program. This would have frustrated Congress's intention to establish the Fund expeditiously, and caused domestic utilities to encounter delays in obtaining appropriate rate relief.

Section 766.104 also provides an administrative appeal procedure for domestic utilities to challenge an adverse determination by DOE on a Special Assessment. Appeals may be filed with the Office of Hearings and Appeals (OHA), a quasi-judicial body that reports to the Secretary of Energy. The OHA is responsible for conducting many of the informal adjudicative proceedings of DOE involving separation of functions. DOE chose OHA to conduct the appeals process because of its expertise in developing administrative records regarding economic issues. In connection with these duties, OHA holds hearings, receives evidence, develops a record, and issues a final determination, which is subject to review in federal courts. The procedures of OHA applicable to this rule are set forth in 10 CFR Part 205, Subpart H. DOE has revised the rule to clarify that it will rely upon decisions from the OHA and any ruling from courts with appropriate jurisdiction in revising records of SWU transactions.

5. Section 766.105 Payment Procedures

Section 766.105 provides that DOE shall specify the procedures that shall be followed by domestic utilities in payment of their apportioned share of the Special Assessment. Wire transfer is identified as the method of payment.

6. Section 766.106 Late Payment Fees

Section 766.106 addresses procedures for assessment of late payment fees in case of a late payment by a domestic utility of its special assessment.

7. Section 766.107 Prepayment of Special Assessments

Section 766.107 has been added to the rule to allow prepayment of future year Special Assessments.

V. Review Under Executive Order 12866

DOE has reviewed this final rule and, after consultation with the Office of Information and Regulatory Affairs within the OMB, determined that the final rule is not a "significant regulatory action" under Executive Order 12866, "Regulatory Planning and Review," (58 FR 51735, October 4, 1993). Accordingly, today's action was not subject to review under the Executive Order by the Office of Information and Regulatory Affairs.

Under one criterion of the Executive Order, a regulatory action is deemed significant if it is expected to have an annual effect on the economy of $100 million or more. It was determined that this criterion did not apply to today's action for the following reasons. While the money to be paid by members of the electric utility industry under the Special Assessment will exceed $100 million annually, these costs are not the result of any exercise of DOE's discretion in the rule. Rather, these costs are specifically imposed by the EPACT and reflect for domestic utilities their statutory *pro rata* share of costs related to the remediation and D&D of DOE's uranium enrichment facilities.

VI. Review Under the Regulatory Flexibility Act

In accordance with section 605 (b) of the Regulatory Flexibility Act, 5 U.S.C. § 601 *et seq.*, DOE finds that sections 603 and 604 of that Act do not apply to this rule because it will not have a significant economic impact on a substantial number of small entities. This finding is based on a determination that the domestic utilities who will be assessed are not small entities.

VII. Review Under the Paperwork Reduction Act

The information collection requirements in this rule have been approved by the OMB under the Paperwork Reduction Act and have been assigned OMB control number 1910–1400.

VIII. Review Under the National Environmental Policy Act

This rule establishes procedures for the Special Assessment of domestic utilities for amounts that are to be deposited in the Fund. The Fund will be used to pay for the cost of D&D and remedial action activities at DOE's uranium enrichment facilities, and for the reimbursement of certain costs of D&D, reclamation, and other remedial actions incurred by licensees at active uranium or thorium processing sites, as specified in Title X of the EPACT. Implementation of this rule will not affect the legally required cleanup of the sites or result in any other environmental impacts. The Department has therefore determined that this rule is covered under the Categorical Exclusion found at paragraph A.6 of Appendix A to Subpart D, 10 CFR Part 1021, which applies to the establishment of procedural rulemakings. Accordingly, neither an environmental assessment nor an environmental impact statement is required.

IX. Review Under Executive Order 12612

This final rule does not have a substantial direct effect on the states, the relationship between the states and the Federal Government, or the distribution of power and responsibilities among various levels of Government. No Federalism assessment under Executive Order 12612 is required.

X. Review Under Executive Order 12778

Section 2 of Executive Order 12778 instructs each agency to adhere to certain requirements in promulgating new regulations and reviewing existing regulations. These requirements, set forth in sections 2 (a) and (b), include eliminating drafting errors and needless ambiguity, drafting the regulations to minimize litigation, providing clear and certain legal standards for affected conduct, and promoting simplification and burden reduction. Agencies are also instructed to make every reasonable effort to ensure that the regulation clearly specifies any preemptive effect, effect on existing Federal law or regulation, and retroactive effect, describes any administrative proceedings to be available prior to judicial review and any provisions for the exhaustion of such administrative proceedings; and defines key terms. DOE certifies that today's final rule meets the requirements of sections 2 (a) and (b) of Executive Order 12778.

List of Subjects in 10 CFR Part 766

Confidential Business Information, Electric Power Rates, Electric Utilities, Nuclear Materials, Radioactive Materials, Reclamation, Reporting & Recordkeeping Requirements, Uranium, Waste Treatment & Disposal.

Issued in Washington, D.C., on this 8th day of August, 1994

Thomas P. Grumbly,

Assistant Secretary for Environmental Management.

For the reasons set forth in the Preamble, Part 766 of Title 10 of the Code of Federal Regulations is revised to read as set forth below:

PART 766—URANIUM ENRICHMENT DECONTAMINATION AND DECOMMISSIONING FUND; PROCEDURES FOR SPECIAL ASSESSMENT OF DOMESTIC UTILITIES

Subpart A—General

Sec.
766.1 Purpose
766.2 Applicability
766.3 Definitions

Subpart B—Procedures for Special Assessment

766.100 Scope
766.101 Data utilization
766.102 Calculation methodology
766.103 Special Assessment invoices
766.104 Reconciliation, adjustments and appeals
766.105 Payment procedures
766.106 Late payment fees
766.107 Prepayment of future special assessments

Authority: 42 U.S.C. §§ 2201, 2297g, 2297g–1, 2297g–2, 7254.

Subpart A—General

§ 766.1 Purpose.

The provisions of this part establish procedures for the Special Assessment of domestic utilities for the Uranium Enrichment Decontamination and Decommissioning Fund pursuant to sections 1801, 1802 and 1803 of the Atomic Energy Act of 1954, as amended (42 U.S.C. § 2011 *et seq.*).

§ 766.2 Applicability.

This part applies to all domestic utilities in the United States that purchased separative work units from the DOE between 1945 and October 23, 1992.

§ 766.3 Definitions.

For the purposes of this part, the following terms shall be defined as follows:

CPI–U means the Consumer Price Index for all-urban consumers published by the Department of Labor.

Commercial electricity generation means the production of electricity for sale to consumers.

DOE means the United States Department of Energy and its predecessor agencies.

Domestic utility means any utility in the United States that has purchased SWUs produced by DOE for the purpose of commercial electrical generation during the period beginning in 1945 to October 23, 1992.

Fund means an account in the U.S. Treasury referred to as the Uranium Enrichment Decontamination and Decommissioning Fund, established by section 1801 of the Atomic Energy Act of 1954, as amended.

Oak Ridge Operations Office means the Oak Ridge Operations Office of the Department of Energy in Oak Ridge, Tennessee.

Special Assessment means the Special Assessment levied on domestic utilities for payments into the Fund.

SWU means a separative work unit, the common measure by which uranium enrichment services are sold.

TESS means the Toll Enrichment Services System, which is the database that tracks uranium enrichment services transactions of the DOE Oak Ridge Operations Office for the purpose of planning, toll transaction processing, customer invoicing and historical tracking of SWU deliveries.

Use and burnup charges mean lease charges for the consumption of SWUs and natural uranium.

Subpart B—Procedures for Special Assessment

§ 766.100 Scope.

This subpart sets forth the procedures for the Special Assessment of domestic utilities for funds to be deposited in the Fund.

§ 766.101 Data utilization.

DOE shall use the records from the Toll Enrichment Services System (TESS) and other records maintained by the Oak Ridge Operations Office in order to determine the total SWUs purchased from DOE for all purposes. DOE shall use records from TESS, relevant records of domestic utilities, and such other information as DOE deems to be reliable and probative in determining the number of SWUs that were purchased by each domestic utility prior to October 24, 1992. A domestic utility shall be considered to have purchased a SWU from DOE if the SWU was produced by DOE but purchased by the domestic utility from another source. DOE shall consider a purchase to have occurred upon the delivery of a SWU to the domestic utility purchasing the SWU. A domestic utility shall not be considered to have purchased a SWU from DOE if the SWU was purchased by the domestic utility but subsequently sold to another source.

§ 766.102 Calculation methodology.

(a) *Calculation of Domestic Utilities' Annual Assessment Ratio to the Fund.* Domestic utilities shall be assessed annually for their share of the Fund. The amount of the assessment shall be determined by the ratio of SWUs produced by DOE and purchased by domestic utilities prior to October 24, 1992, to the total number of SWUs produced by DOE for all purposes (including SWUs produced for defense purposes). All calculations will be carried out to the fifth significant digit. This ratio is expressed by the following hypothetical example:

SWUs purchased by all domestic utilities		Total SWUs produced—all purposes		Special assessment ratio
12345	÷	45678	=	.27026

(b) *Calculation of the Baseline Total Annual Special Assessment for Domestic Utilities.* The Annual Special Assessment ratio calculated in paragraph (a) of this section shall be multiplied by $480 million, yielding the total amount of the Baseline Total Annual Special Assessment as of October 1992. In the event that this amount is in excess of $150 million, the Baseline Total Annual Special Assessment shall be capped at $150 million. All calculations will be carried out to the fifth significant digit. The Baseline Total Annual Special Assessment is determined as shown in the following hypothetical example:

Total fund		Annual assessment ratio		Baseline total annual special assessment
$480,000,000	×	0.27026	=	$129,724,800

(c) *Calculation of Baseline Total Annual Special Assessment per Utility.* The ratio of the total number of SWUs purchased by an individual domestic utility for commercial electricity generation, to the total number of SWUs purchased by all domestic utilities for commercial electricity generation, multiplied by the Baseline Total Annual Special Assessment calculated in paragraph (b) of this section, determines an individual utility's share of the Baseline Total Annual Special Assessment. All calculations will be carried out to the fifth significant digit. A hypothetical example of such a calculation follows:

Single utility SWUs		All utility SWUs		Utility ratio		Baseline total annual special assessment	Individual utility special Assessment
300	+	12345	=	.02430	×	$129,724,800	$3,152,312.64

(d) *Calculation of Inflation Adjustment.* The Baseline Total Annual Special Assessment billed to domestic utilities shall be adjusted for inflation using the most recently published monthly CPI–U and the CPI–U for October 1992. All calculations will be carried out to the fifth significant digit. A hypothetical example of such a calculation follows:

CPI–U (Mar 93)		CPI–U (Oct 92)		Adjustment multiplier
150	+	141.6	=	1.05783

Utility special Assessment		Adjustment multiplier		Adjusted utility assessment
$3,152,312.64	×	1.05783	=	$3,334,610.88

§ 766.103 Special Assessment invoices.

(a) DOE shall issue annually a Special Assessment invoice to each domestic utility. This invoice will specify itemized quantities of enrichment services by reactor. In each Special Assessment invoice, DOE shall require payment, on or before 30 days from the date of each invoice, of that utility's prorated share of the Baseline Total Annual Special Assessment, as adjusted for inflation using the most recently published monthly CPI–U data.

(b) DOE shall enclose with the Fiscal Year 1993 Special Assessment invoice a sealed, business confidential, summary SWU transaction statement including:

(1) TESS information which documents, by reactor, the basis of the utility's assessment;

(2) A list of domestic utilities subject to the Special Assessment;

(3) The total number of SWUs purchased from DOE by all domestic utilities for all purposes prior to October 24, 1992.

(4) The total number of SWUs purchased from DOE for all purposes prior to October 24, 1992, including SWUs purchased or produced for defense purposes; and

(5) Such other information as may be appropriate.

(c) With regard to any fiscal year after Fiscal Year 1993, DOE shall enclose a summary SWU transaction statement with Special Assessment invoices that will include updated information regarding adjustments to Special Assessments resulting from the reconciliation and appeals process under Section 766.104.

(d) The date of each Annual Special Assessment invoicing will be set on or about October 1 with payment due 30 calendar days from the date of invoice starting with the Fiscal Year 1995 Special Assessment.

§ 766.104 Reconciliation, adjustments and appeals.

(a) A domestic utility requesting an adjustment shall, within 30 days from the date of a Special Assessment invoice, file a notice requesting an adjustment. Such notice shall include an explanation of the basis for the adjustment and any supporting documents, and may include a request for a meeting with DOE to discuss its invoice. If more time is needed to gather probative information, DOE will consider utility requests for up to 90 days additional time, providing that the initial notice requesting an adjustment was timely filed. The notice shall be filed at the address set forth in the Special Assessment invoice, and filing of this notice is complete only upon receipt by DOE. Domestic utilities are considered to have met the filing requirements upon DOE's receipt of the notice requesting an adjustment without regard to DOE's acceptance of supporting documentation. The filing of a notice for an adjustment shall not stay the obligation to pay.

(b) DOE may request additional information from domestic utilities and may acquire data from other sources.

(c) After reviewing a notice submitted under paragraph (a) of this section and other relevant information, and after making any necessary adjustment to its records in light of reliable and adequately probative records submitted in connection with the request for adjustment or otherwise obtained by DOE, DOE shall make a written determination granting or denying the requested adjustment. As appropriate, DOE shall modify the application of TESS data for any discrepancies or further transactions raised during the reconciliation process.

(d) Any domestic utility that wishes to dispute a written determination under paragraph (c) of this section shall have the right to file an appeal with the Office of Hearings and Appeals, U.S. Department of Energy, 1000 Independence Avenue S.W., Washington, DC 20585. Except for the Fiscal Year 1993 Special Assessment, any appeal must be filed on or before 30 days from the date of the written determination and should contain information of the type described in 10 CFR Part 205, Subpart H. With regard to a written determination under paragraph (c) of this section concerning a Fiscal Year 1993 Special Assessment, a domestic utility must file an appeal on or before 30 days from the effective date of this paragraph or from the date of such written determination, whichever is later. The decision of the Office of Hearings and Appeals shall be the final decision of DOE. Upon completion of the reconciliation process, all records of SWU transactions shall be finalized and shall become the basis of subsequent Special Assessment invoices. These records shall be revised to reflect any decisions from the Office of Hearings and Appeals and any applicable court rulings.

(e) Refunds of Special Assessments shall be provided in cases where DOE has determined, as a result of reconciliation, that an overpayment has been made by a domestic utility, and that the domestic utility has no further current obligation to DOE.

§ 766.105 Payment procedures.

DOE shall specify payment details and instructions in all Special Assessment invoices. Each domestic utility shall make payments to the Fund by wire transfer to the Department of Treasury.

§ 766.106 Late payment fees.

In the case of a late payment by a domestic utility of its Special Assessment, the domestic utility shall pay interest at the per annum rate (365-day basis) established by DOE for general application to monies due DOE and not received by DOE on or before a designated due date. Interest shall accrue beginning the date of the designated payment except that, whenever the due date falls on a Saturday, Sunday, or a United States legal holiday, interest shall commence on the next day immediately following

which is not a Saturday, Sunday, or United States legal holiday. Late payment provisions for the Special Assessment to the Fund shall be based on the Treasury Current Value of Funds Rate (which is published annually by the Treasury and used in assessing interest charges for outstanding debts on claims owed to the United States Government), plus six (6) percent pro rata on a daily basis. The additional six (6) percent charge shall not go into effect until five (5) business days after payment was originally due. Late payment fees shall be invoiced within two days of receipt of utility payment of the special assessment when delinquency is less than 30 days. For longer periods of delinquency, DOE will submit additional invoices, as appropriate. Late payment fees will be due 30 days from the date of invoice.

§ 766.107 Prepayment of future Special Assessments

DOE shall accept prepayment of future Special Assessments upon request by a domestic utility. A domestic utility's liability for the future assessments shall be satisfied to the extent of the prepayments. DOE shall use the pro rata share of prepayments attributable to a given fiscal year plus the Special Assessments collected from utilities who did not prepay for that fiscal year, in order to determine that the total amount of Special Assessments collected from domestic utilities in a given fiscal year does not exceed $150 million, annually adjusted for inflation.

[FR Doc. 94–19922 Filed 8–12–94; 8:45 am]

BILLING CODE 6450–01–P

federal register

Monday
August 15, 1994

Part X

Environmental Protection Agency

40 CFR Part 82
Protection of Stratospheric Ozone; Refrigerant Recycling; Proposed Rule

ENVIRONMENTAL PROTECTION AGENCY

40 CFR Part 82

[FRL-5040-5]

Protection of Stratospheric Ozone; Refrigerant Recycling

AGENCY: Environmental Protection Agency (EPA).

ACTION: Proposed rule.

SUMMARY: The Environmental Protection Agency (EPA) is amending the rules on refrigerant recycling promulgated under section 608 of the Clean Air Act to clarify the conditions under which technician certification programs would be grandfathered, allowing technicians who had participated in voluntary technician training and certification programs prior to the publication of the rule to receive formal certification. EPA is also proposing to amend the rule to clarify the scope of the technician certification requirement.

DATES: Written comments on the proposed rule must be received by September 14, 1994, unless a hearing is requested by August 25, 1994. If a hearing is requested, written comments must be received by October 3, 1994. If requested, a public hearing will be held on September 1, 1994 at 9 a.m. Individuals wishing to request a hearing must contact the Stratospheric Ozone Hotline at 1-800-296-1996 by August 25, 1994. To find out whether a hearing will take place, contact the Stratospheric Ozone Hotline between August 26, 1994 and September 1, 1994.

ADDRESSES: Comments should be submitted in duplicate to the attention of Air Docket No. A-92-01 VIII.A at: Environmental Protection Agency, 401 M Street, S.W., Washington, D.C. 20460. The public hearing will be held at Washington Information Center (WIC), room 3 North, USEPA, 401 M Street SW., Washington, DC. The Air and Radiation Docket and Information Center is located in room M-1500, Waterside Mall (Ground Floor) Environmental Protection Agency, 401 M Street, S.W., Washington, D.C. 20460. Dockets may be inspected from 8:00 a.m. to 4:00 p.m., Monday through Friday. A reasonable fee may be charged for copying docket materials.

FOR FURTHER INFORMATION CONTACT: Debbie Ottinger, Program Implementation Branch, Stratospheric Protection Division, Office of Atmospheric Programs, Office of Air and Radiation (6205-J), 401 M Street, S.W., Washington, D.C. 20460. The Stratospheric Ozone Information Hotline at 1-800-296-1996 can also be contacted for further information.

SUPPLEMENTARY INFORMATION:

I. Background

Final regulations published on May 14, 1993 (58 FR 28660) establish a recycling program for ozone-depleting refrigerants recovered during the servicing and disposal of air-conditioning and refrigeration equipment. The regulations require technicians to observe practices that serve to minimize release of refrigerant to the environment. To ensure that technicians become knowledgeable of these requirements, § 82.161 of the final rule mandates that technicians be certified by passing a test. For Type II, Type III, and Universal technicians, the test must be a closed-book, proctored examination drawn from a bank of test questions kept by the Environmental Protection Agency (EPA) and administered in a secure environment by an EPA-approved certifying program. For Type I technicians, a mail-in program is permitted. Testing and training organizations can apply to EPA to become EPA-approved technician certifiers under § 82.161(c) by demonstrating that they can ensure test security, provide an adequate number of proctors during the examination, select questions randomly from the test bank, and provide proof of certification to technicians who pass the exams. (The specific requirements of the program are presented in § 82.161 and appendix D of the final rule.) To date, EPA has authorized 66 organizations as technician certifying organizations.

A. Grandfathering

Under § 82.161(g), organizations that seek approval as certifying organizations can also apply to grandfather technicians who received training and testing under programs established prior to promulgation of the final rule (which established the approval process for certification programs). Specifically, § 82.161(g) states:

"Persons seeking approval of a technician certification program may also seek approval for technician certifications granted previously under the program. Interested persons may submit to the Administrator at the address in § 82.160(a) verification that the program met all of the standards of § 82.161(c) and appendix D, * * * except for some elements of the test subject material, in which case the person must submit verification that supplementary information on that material will be provided pursuant to appendix D, section (j)"

When EPA initially drafted the language requiring programs to meet "all of the standards of § 82.161(c) and appendix D," these standards were considerably more general than those that were ultimately incorporated into the rule. The proposal had discussed possible requirements in broad terms. For instance, although the proposal anticipated that tests would be proctored, it did not suggest a specific ratio of proctors to examinees, such as the 1:50 ratio that ultimately appeared in the final rule. Similarly, the proposal did not specify whether tests would be open- or closed-book. Instead, the proposal included general requirements that tests be proctored, that test security measures be in place, and that tests be graded objectively. EPA believed that many voluntary programs would meet these general requirements.

In response to comments, the requirements for certifying organizations grew more specific. EPA believed that increasing the specificity of the standards strengthened the technician certification program overall. However, EPA did not thoroughly reevaluate and revise its grandfathering provision to reflect the new, detailed requirements. Instead, the provision inappropriately continued to require voluntary programs to have met *all* the requirements of § 82.161(c) and appendix D.

This error has now come to EPA's attention. The Agency recognizes that if voluntary programs were held to each of the detailed standards, no voluntary technician certification program could be grandfathered. Appendix D contains the specific requirements of the technician certification program. Voluntary programs prior to the promulgation of the final rule could not have complied with these requirements, as they were not yet in existence. Section (a) (Test Preparation) of appendix D requires that "each certifying program must assemble tests by choosing a prescribed subset from the EPA test bank." However, the test bank did not become available until September 30, 1993. In addition, EPA requires programs to certify technicians with Type I, Type II, or Type III certifications, depending on the level of the test passed by the technician. EPA developed these categories after the close of the public comment period to the proposed rule. However, other logical categorization systems are possible, and until EPA promulgated the final rule, many technician certification organizations categorized technician types differently. Furthermore, section (a) requires a closed-book test, yet most testing organizations prior to the final

rule offered only open-book tests. Finally, appendix D defines the ratio of technicians to proctors, and requires recordkeeping and reporting requirements, all requirements that organizations certainly could not have complied with prior to the promulgation of the final rule.

Nevertheless, many voluntary programs met most of the standards of appendix D, for instance proctoring tests (at least the equivalent of Type II, Type III, and Universal tests), ensuring test security, and objectively grading tests. Several programs also covered most of the required subject matter in the core and at least some technical sections, even when they did not establish the same categories in their testing as were established in the final rule (Type I, II, etc.). Where the content of their voluntary testing fell short of that required by the final rule, programs expressed their willingness to provide additional testing and training as needed, and the final rule provided for this remedy.

EPA has always intended to grandfather these reasonably stringent programs. By training and testing technicians in recycling refrigerants before the rule was promulgated (on May 14, 1993), reasonably stringent voluntary programs prepared technicians to comply with the prohibition on venting that became effective on July 1, 1992, and probably significantly reduced refrigerant emissions. These programs also served as an impetus for developing a mandatory program, providing a model for that program. Indeed, EPA worked with several voluntary programs to develop the requirements of the mandatory program. In addition, many voluntary organizations provided questions for the test bank, determining the scope of the training and the current exam. In proposing and adopting the grandfathering provision, EPA recognized that these benefits outweighed any costs that might be associated with the programs' unavoidable failure to have followed every requirement that new programs must follow under the final rule. Moreover, EPA did not want to discourage future participation in voluntary environmental training. Requiring repeat testing for technicians who voluntarily took adequate testing and training could discourage people from participating in future voluntary programs. For these reasons, EPA is modifying the requirements for grandfathering to ensure that these programs are not disqualified outright due to a drafting error by the Agency.

Specifically, the EPA today is proposing to amend the grandfathering provision of § 82.161(g). This paragraph currently states that "[i]nterested parties may submit to the Administrator at the address in § 82.160(a) verification that the program met all of the standards of § 82.161(c) and appendix D, or verification that the program met all of the standards of § 82.161(c) and appendix D, except for some elements of the test subject material, in which case the person must submit verification that supplementary information will be provided pursuant to appendix D, section (j)." EPA is proposing to amend § 82.161(g) to read "Interested persons may submit to the Administrator at the address in § 82.160(a) verification that the program substantially complied with most of the standards of § 82.161(c) and appendix D. If the program did not test or train participants on some elements of the test subject material, the person must submit verification that supplementary information on the omitted material will be provided pursuant to appendix D, section (j)."

In reviewing requests to grandfather technicians, EPA will assess the extent to which a program substantially complied with most of the requirements in each paragraph of § 82.161(c) and appendix D (paragraph (a) of appendix D being test preparation, (b), proctoring, (c), test security, etc.) and most of the paragraphs of § 82.161(c) and appendix D, considering the information that was available to the program at the time of its development. EPA believes that this is reasonable given the limited information available to these programs before the final rule was published. For example, the proposed rule published on December 10, 1992, discussed the need for organizations to provide proctored tests under conditions that ensured test security, but did not specify that one proctor be provided for every 50 individuals taking the test. Under the approach proposed in this document, voluntary programs that provided proctors, but did not necessarily provide exactly one proctor for every 50 individuals taking the test, would not be disqualified on that basis alone. EPA believes that the modification of the final rule to replace "met all" with "substantially complied with most" allows EPA to review these programs taking such circumstances into account.

EPA recognizes that the current rule requires that all technicians be certified by November 14, 1994. However, EPA did not anticipate the delay caused by this amendment, and EPA does not wish to force technicians who completed a voluntary program to take additional testing simply because they do not know whether or not their voluntary program will be grandfathered. Thus, the Agency proposes to extend the deadline until six months after promulgation of this amendment for those technicians who successfully completed voluntary programs. During the six-month period of the extension, those technicians who successfully completed a voluntary program could continue to service, maintain, repair, and dispose of appliances and could buy refrigerant using the certificates or cards issued by the voluntary program. This additional time would allow EPA to consider applications for grandfathering and would enable grandfathered voluntary programs to provide supplementary information or testing, if necessary, and proof of certification to grandfathered technicians. To make their past participants eligible for this extension, programs would have to apply (or have already applied) within 30 days of publication of the final amendment: (1) To be approved as a "new" program, and (2) to grandfather technicians. This extension would not apply to technicians who had not participated in voluntary programs that apply within the set period. These technicians would still have to be certified by November 14, 1994.

In addition to the changes outlined above, EPA is clarifying how it would determine whether programs and individual technicians would be grandfathered for a given Type. Whether a voluntary certification program was grandfathered for a Type would depend upon the coverage by the program of the material in that Type. Whether an individual technician was grandfathered for a given Type would depend upon: (1) Whether the technician successfully completed a voluntary program that was grandfathered for that Type; (2) whether the technician successfully completed the portions of the voluntary certification program that correspond to that Type; and (3) whether the technician completes any additional testing and training required by the Administrator pursuant to § 82.161(g)(i). For clarity, EPA is also adding two definitions, defining "to be grandfathered," and "voluntary certification program."

B. Clarification of the Scope of the Technician Certification Requirement

EPA is proposing several changes to clarify the scope of the technician certification requirement. The current regulation contains three provisions addressing the scope of this requirement. These provisions are

somewhat inconsistent. The first provision is the definition of technician at § 82.152(x):

Technician means any person who performs maintenance, service, or repair that could reasonably be expected to release class I or class II substances from appliances into the atmosphere, including but not limited to installers, contractor employees, in-house service personnel, and in some cases, owners. Technician also means any person disposing of appliances except for small appliances.

This definition implies that certification requirements are triggered: (1) When persons perform maintenance or repair that has the potential to release refrigerants from appliances into the atmosphere or (2) when persons dispose of appliances.

The second provision requiring clarification is the prohibition at § 82.154(l):

(l) Effective November 14, 1994, no person may open an appliance except for an MVAC and no person may dispose of an appliance except for a small appliance, MVAC, or MVAC-like appliance, unless such person has been certified as a technician for that type of appliance pursuant to § 82.161.

The prohibition explicitly links certification requirements to "opening" of appliances. "Opening" an appliance is defined as "any service, maintenance, or repair on an appliance that could be reasonably expected to release refrigerant from the appliance to the atmosphere unless the refrigerant were previously recovered from the appliance" (§ 82.152(n)). Like the definition of technician, the prohibition also links certification requirements to the disposal of appliances, regardless of the potential for refrigerant release during any given phase of the disposal process.

Although the definition of "opening" contains language very similar to the language in the definition of "technician," specifically, "maintenance, service, or repair that could reasonably be expected to release class I or class II substances from appliances into the atmosphere," EPA intended the definitions to include slightly different types of activities. While EPA intended the definition of "technician" to include any work that could release refrigerant into the environment, EPA intended "opening" to include entry into the refrigeration circuit itself. The definition of "opening" was developed to include exactly the type of work before which refrigerant should be recovered from the appliance (or moved to another, isolated component of the appliance); thus, "opening" an appliance triggers EPA's evacuation requirements. Clearly, there are some types of activities, such as charging appliances, that have the potential to release refrigerant but should not trigger evacuation requirements.

Nonetheless, when EPA developed its evacuation and certification requirements, it believed that for all practical purposes, the same group of people would be included under the definition of "technician" and under the prohibition linked to the definition of "opening." However, EPA has since learned that some individuals charge appliances or do other work that could release refrigerant into the environment without ever "opening" appliances. EPA believes that these individuals should be certified. On the other hand, some individuals open or disassemble appliances only after refrigerant has been removed by someone else. EPA believes that if these individuals service, maintain, repair, or dispose of only empty appliances, they should not need to be certified.

The third provision requiring clarification is the technician certification requirement itself:

Effective November 14, 1994, persons who maintain, service, or repair appliances, except MVACS, and persons who dispose of appliances, except for small appliances, room air conditioners, and MVACs, must be certified by an approved technician certification program * * * (§ 82.161(a)).

This provision implies that all persons who maintain, service, repair or dispose of appliances (except for some types of appliances) must be certified, even those who do work (e.g., electrical work) that does not have the potential to release refrigerant to the atmosphere. While EPA intended this provision to include only the persons who fell under the first two provisions, it did not make this explicit in the regulation.

Therefore, EPA is proposing to amend the rule to clarify the scope of the certification requirement. First, the proposed rule would modify the definition of "opening" in order to distinguish it more clearly from the definition of "technician." "Opening" would be defined as any service, maintenance, or repair on an appliance that would (instead of "could") be reasonably expected to release refrigerant from the appliance to the atmosphere unless the refrigerant were previously recovered from the appliance. Second, the proposed rule would modify the disposal provision of the definition of "technician" to include only those parts of the disposal process (e.g., evacuation of the equipment) that have the potential to release refrigerant. Third, the proposal links this definition to the certification requirement at § 82.161 by replacing the term "person" in that requirement with the term "technician." Fourth, the prohibition linking technician certification requirements to "opening" appliances would be eliminated. EPA requests comment on whether these changes sufficiently clarify the scope of the technician certification requirement.

C. Limited Exemption From Certification Requirements for Apprentices

EPA is also amending the rule to clarify that apprentices who meet certain requirements are exempt from the certification requirement until the end of their field training, as long as that training does not exceed two years. EPA recognizes that some educational programs train apprentices in the field, allowing them to perform maintenance, service, repair, or disposal of appliances under the close supervision of more experienced technicians. A person would be considered an apprentice if he or she: (1) Was currently registered as an apprentice in service, maintenance, repair, or disposal of appliances with the U.S. Department of Labor's Bureau of Apprenticeship and Training (or its delegate), and (2) had less than two years of experience servicing, maintaining, repairing, or disposing of appliances (whether he or she was in a training program at the time or not). An apprentice would not need to be certified as long as he or she was closely and continuously supervised by a certified technician while performing any maintenance, service, repair, or disposal that could reasonably be expected to release refrigerant from appliances into the atmosphere. Uncertified apprentices would not be able to purchase refrigerant after November 14, 1994, however. This provision clearly would not permit uncertified technicians who were not in a training program to perform, under a certified supervisor, service, maintenance, repair, or disposal that could reasonably be expected to release refrigerant from appliances into the atmosphere.

EPA understands that both union and non-union apprentices in air conditioning and refrigeration throughout the U.S. are required to register with the U.S. Department of Labor's Bureau of Apprenticeship and Training. EPA requests comment on whether there are significant exceptions to this requirement and on EPA's proposed use of registration with the Bureau as a qualification for status as an

apprentice under this rule. If registration with the Bureau is not an appropriate qualification, EPA requests comment on what other qualifications would permit EPA to distinguish *bona fide* apprentices from other technicians.

IV. Summary of Supporting Analysis

A. Executive Order 12866

Under Executive Order 12866 (58 FR 51735, October 4, 1993), the Agency must determine whether this regulatory action is "significant" and therefore subject to OMB review and the requirements of the Executive Order. The Order defines "significant" regulatory action as one that is likely to lead to a rule that may:

(1) Have an annual effect on the economy of $100 million or more, or adversely and materially affect a sector of the economy, productivity, competition, jobs, the environment, public health or safety, or State, local, or tribal governments or communities;

(2) Create a serious inconsistency or otherwise interfere with an action taken or planned by another agency;

(3) Materially alter the budgetary impact of entitlement, grants, user fees, or loan programs or the rights and obligations of recipients thereof; or

(4) Raise novel legal or policy issues arising out of legal mandates, the President's priorities, or the principles set forth in the Executive Order.

It has been determined by OMB and EPA that this amendment to the final rule is not a "significant regulatory action" under the terms of Executive Order 12866 and is therefore not subject to OMB review under the Executive Order.

B. Regulatory Flexibility Act

The Regulatory Flexibility Act, 5 U.S.C. 601–602, requires that Federal agencies examine the impacts of their regulations on small entities. Under 5 U.S.C. 604(a), whenever an agency is required to publish a general notice of proposed rulemaking, it must prepare and make available for public comment an initial regulatory flexibility analysis (RFA). Such an analysis is not required if the head of an agency certifies that a rule will not have a significant economic impact on a substantial number of small entities, pursuant to 5 U.S.C. 605(b).

EPA believes that any impact that this amendment will have on the regulated community will serve only to provide relief from otherwise applicable regulations, and will therefore limit the negative economic impact associated with the regulations previously promulgated under section 608. An examination of the impacts on small entities was discussed in the final rule (58 FR 28660). That final rule assessed the impact the rule may have on small entities. A separate regulatory impact analysis accompanied the final rule and is contained in Docket A–92–01. I certify that this amendment to the refrigerant recycling rule will not have any additional negative economic impacts on any small entities.

C. Paperwork Reduction Act

Any information collection requirements in a rule must be submitted for approval to the Office of Management and Budget (OMB) under the Paperwork Reduction Act, 44 U.S.C. 3501 *et seq.* Because no additional informational collection requirements are required by this amendment, EPA has determined that the Paperwork Reduction Act does not apply to this rulemaking and no new Information Collection Request document has been prepared.

V. Judicial Review

Under section 307(b)(1) of the Act, EPA finds that these regulations are of national applicability. Accordingly, judicial review of this action is available only by the filing of a petition for review in the United States Court of Appeals for the District of Columbia Circuit within sixty days of publication of this action in the **Federal Register**. Under section 307(b)(2), the requirements of this rule may not be challenged later in judicial proceedings brought to enforce those requirements.

List of Subjects in 40 CFR Part 82

Administrative practice and procedure, Air pollution control, Chemicals, Chlorofluorocarbons, Hydrochlorofluorocarbons, Recovery and recycle, Reporting and recordkeeping requirements, Stratospheric ozone layer.

Dated: August 4, 1994.

Carol M. Browner,

Administrator.

Title 40, Code of Federal Regulations, part 82, is amended as follows:

PART 82—PROTECTION OF STRATOSPHERIC OZONE

1. The authority citation for part 82 continues to read as follows:

Authority: 42 U.S.C. 7414, 7601, 7671–7671q.

2. Section 82.152 is amended by redesignating paragraphs (f) through (y) as paragraphs (h) through (aa), redesignating paragraphs (b) through (e) as paragraphs (c) through (f), revising newly designated paragraphs (p) and (z), and by adding new paragraphs (b), (g), and (bb) to read as follows:

§ 82.152 Definitions.

* * * * *

(b) *Apprentice* means any person who is currently registered as an apprentice in service, maintenance, repair, or disposal of appliances with the U.S. Department of Labor's Bureau of Apprenticeship and Training (or its delegate). If more than two years have elapsed since the person first began performing maintenance, service, repair or disposal of appliances or registered as an apprentice with the Bureau of Apprenticeship and Training, the person shall not be considered an apprentice.

* * * * *

(g) *To be grandfathered* means:

(1) To receive the approval of the Administrator pursuant to § 82.161(g)(1) to certify technicians who successfully completed a voluntary certification program; or

(2) To become certified as a technician pursuant to § 82.161(g)(2).

* * * * *

(p) *Opening* an appliance means any service, maintenance, or repair on an appliance that would be reasonably expected to release class I or class II refrigerant from the appliance to the atmosphere unless the refrigerant were previously recovered from the appliance.

* * * * *

(z) *Technician* means any person who performs maintenance, service, or repair that could be reasonably expected to release class I or class II refrigerants from appliances, except for MVACs, into the atmosphere, including but not limited to installers, contractor employees, in-house service personnel, and in some cases, owners. Technician also means any person who performs disposal of appliances, except for small appliances, MVACs, and MVAC-like appliances, that could reasonably be expected to release class I or class II refrigerants from the appliances into the atmosphere.

* * * * *

(bb) *Voluntary certification program* means a technician testing program operated by a person before that person obtained approval of a technician certification program pursuant to § 82.161(c).

3. Section 82.154 is amended by removing paragraph (l), by redesignating paragraphs (m) through (o) as (l) through (n) respectively, and by redesignating newly designated paragraphs (m)(2) through (m)(6) as (m)(3) through (m)(7)

respectively, and by adding paragraphs (m)(2) and (m)(8) to read as follows:

§ 82.154 Prohibitions.

* * * * *

(m) * * *

(2) The buyer has successfully completed a voluntary certification program requesting grandfathering under § 82.161(g) by [30 days after publication of the final rule]. This paragraph (m)(2) expires on [six months after publication of the final rule].

* * * * *

(8) The refrigerant is charged into an appliance by a technician who successfully completed a voluntary certification program requesting grandfathering under § 82.161(g) by [30 days after publication of the final rule]. This paragraph (m)(8)expires on [six months after publication of the final rule].

4. Section 82.161 is amended by revising paragraph (a) introductory text; by revising the word "Persons" to read "Technicians" in paragraphs (a)(1) through (a)(5); by revising paragraph (g); and by adding paragraph (a)(6) to read as follows:

§ 82.161 Technician certification.

(a) Effective November 14, 1994, technicians, except technicians who successfully completed voluntary certification programs that apply for grandfathering under § 82.161(g) by [30 days after publication of the final rule], must be certified by an approved technician certification program under the requirements of this paragraph. Effective [six months after publication of the final rule], technicians who successfully completed voluntary certification programs that apply for grandfathering under § 82.161(g) by [30 days after publication of the final rule] but who are not grandfathered for the appropriate type as set forth in this paragraph (a) and in § 82.161(g)(2) must be certified by an approved technician certification program under the requirements of this paragraph (a). Effective [six months after publication of the final rule], technicians who are grandfathered for the appropriate type as set forth in this paragraph and in § 82.161(g)(2) must have completed any additional testing and training specified by the Agency pursuant to § 82.161(g) and appendix D of subpart F, section (j).

* * * * *

(6) Apprentices are exempt from this requirement provided the apprentice is closely and continuously supervised by a certified technician while performing any maintenance, service, repair, or disposal that could reasonably be expected to release refrigerant from appliances into the environment. The supervising certified technician is responsible for ensuring that the apprentice complies with this subpart.

* * * * *

(g)(1) Any person seeking approval of a technician certification program may also seek approval to certify technicians who successfully completed a voluntary certification program operated previously by that person. Interested persons must submit to the Administrator at the address in § 82.160(a) verification that the voluntary certification program substantially complied with most of the standards of § 82.161(c) and appendix D of subpart F. If the program did not test or train participants on some elements of the test subject material, the person must submit verification that supplementary information on the omitted material will be provided pursuant to appendix D of subpart F, section (j). Approval may be granted for Type I, Type II, or Type III certification, or some combination of these, depending upon the coverage in the voluntary certification program of the information in each Type. In order to have their programs considered for grandfathering, persons must submit applications both for approval as a technician certification program and for grandfathering by [30 days after publication of the final rule].

(2) Technicians who successfully completed voluntary certification programs may receive certification in a given Type through that program only if:

(i) The voluntary certification program successfully completed by the technician is grandfathered for that Type pursuant to § 82.161(g)(1);

(ii) The technician successfully completed the portions of the voluntary certification program that correspond to that Type; and

(iii) The technician completes any additional testing and training required by the Administrator pursuant to § 82.161(g)(i).

[FR Doc. 94–19889 Filed 8–12–94; 8:45 am]

BILLING CODE 6560–50–P

Reader Aids

Federal Register

Vol. 59, No. 156

Monday, August 15, 1994

INFORMATION AND ASSISTANCE

Federal Register

Index, finding aids & general information	202–523–5227
Public inspection announcement line	523–5215
Corrections to published documents	523–5237
Document drafting information	523–3187
Machine readable documents	523–3447

Code of Federal Regulations

Index, finding aids & general information	523–5227
Printing schedules	523–3419

Laws

Public Laws Update Service (numbers, dates, etc.)	523–6641
Additional information	523–5230

Presidential Documents

Executive orders and proclamations	523–5230
Public Papers of the Presidents	523–5230
Weekly Compilation of Presidential Documents	523–5230

The United States Government Manual

General information	523–5230

Other Services

Data base and machine readable specifications	523–3447
Guide to Record Retention Requirements	523–3187
Legal staff	523–4534
Privacy Act Compilation	523–3187
Public Laws Update Service (PLUS)	523–6641
TDD for the hearing impaired	523–5229

ELECTRONIC BULLETIN BOARD

Free **Electronic Bulletin Board** service for Public Law numbers, Federal Register finding aids, and list of documents on public inspection. 202–275–0920

FAX-ON-DEMAND

The daily Federal Register Table of Contents and the list of documents on public inspection are available on the National Archives fax-on-demand system. You must call from a fax machine. There is no charge for the service except for long distance telephone charges. 301–713–6905

FEDERAL REGISTER PAGES AND DATES, AUGUST

38875–39246	1
39247–39412	2
39413–39672	3
39673–39936	4
39937–40204	5
40205–40462	8
40463–40790	9
40791–41218	10
41219–41376	11
41377–41636	12
41637–41972	15

CFR PARTS AFFECTED DURING AUGUST

At the end of each month, the Office of the Federal Register publishes separately a List of CFR Sections Affected (LSA), which lists parts and sections affected by documents published since the revision date of each title.

3 CFR

Administrative Orders:
Memorandums:
July 26, 1994 40205
August 2, 1994 40463
Proclamations:
6709 39671
6710 39673
6711 39675
6712 39935
6713 41375
Executive Orders:
July 9, 1910 (Revoked in part by PLO 7076) 39702

5 CFR

293 40791
351 40791
430 40791
432 40791
451 40791
511 40791
530 40791
531 40791
536 40791
540 40791
575 40791
591 40791
595 40791
771 40791
12000 39937
Proposed Rules:
831 41746
842 41716

7 CFR

52 41377
300 40794
301 ..... 39937, 40207, 41219
319 40794
406 39413
905 41378
906 39414
920 41379
922 39415
923 39415
924 39415
945 41381
958 41638
959 41382
967 41637
981 39417
982 41638
985 ..... 41219, 41221
987 41383
993 41385
997 39419
998 39421
1250 38875
1413 39247
1421 39247
1427 39251
1435 41222
1901 41366
1940 41386
1951 41386
2003 41386
4284 41386
Proposed Rules:
55 38944
56 38944
59 38944
70 38944
920 41717
945 40477
947 39479
1001 40418
1002 40418
1004 ..... 40418, 41413
1005 40418
1006 40418
1007 40418
1011 40418
1012 40418
1013 40418
1030 40418
1032 40418
1033 40418
1036 40418
1040 40418
1044 40418
1046 40418
1049 40418
1050 40418
1064 40418
1065 40418
1068 40418
1075 40418
1076 40418
1079 40418
1093 40418
1094 40418
1096 40418
1099 40418
1106 40418
1108 40418
1124 40418
1126 40418
1131 40418
1134 40418
1135 40418
1137 40418
1138 40418
1139 40418
1205 39480
1413 39707
1710 39975
1714 39975
1726 40315
1785 39975
1942 40478
4284 40478

8 CFR

103 ... 39394
204 ... 38876
211 ... 39394
214 ... 41818
216 ... 39394
235 ... 39394
242 ... 39394

Proposed Rules:

214 ... 41843
274a ... 41843

9 CFR

160 ... 40797
317 ... 39941, 40209
318 ... 39254, 41640
319 ... 39254
381 ... 39254, 40209

10 CFR

19 ... 41641
20 ... 41641
35 ... 41641
40 ... 41641
73 ... 38889
766 ... 41956

Proposed Rules:

61 ... 39485

11 CFR

8 ... 40639
107 ... 39635
114 ... 39635
9008 ... 39635

12 CFR

34 ... 40202
225 ... 39677, 40202
226 ... 40203
230 ... 40217
323 ... 40202
564 ... 40202
701 ... 39423
707 ... 39425
722 ... 40202

Proposed Rules:

225 ... 39709
707 ... 39486

13 CFR

121 ... 39426

Proposed Rules:

107 ... 40315

14 CFR

23 ... 39941
25 ... 39427
36 ... 39679
39 ... 39429, 39431, 39432, 40084, 40798, 40799, 41225, 41227, 41229, 41233, 41235, 41237, 41238, 41643, 41645, 41647, 41653, 41655, 41662
71 ... 39434, 39435, 40084, 40228, 40229, 40230, 40231, 40232, 40233, 40234, 40465, 40800, 40801, 40802, 41398
91 ... 39679
95 ... 39436
97 ... 39943 39944, 39947
1260 ... 38900

Proposed Rules:

Ch. I ... 39983
1 ... 39192
13 ... 40192, 41192
16 ... 41192
36 ... 39711
39 ... 39983, 40488, 40490, 41261
257 ... 40836
71 ... 39394
91 ... 39711
189 ... 39395
399 ... 40836

15 CFR

771 ... 40235
785 ... 40235
799 ... 40235

16 CFR

305 ... 39951

Proposed Rules:

800 ... 40492
243 ... 41261
1203 ... 41719
1500 ... 39306

17 CFR

200 ... 39680

Proposed Rules:

270 ... 39311

18 CFR

35 ... 40238
154 ... 40238, 40240
157 ... 40240
210 ... 39020
211 ... 39020
270 ... 40240
271 ... 40240
272 ... 40240
273 ... 40240
274 ... 40240
275 ... 40240
284 ... 38901
292 ... 40468
341 ... 40243
342 ... 40243
343 ... 40243

Proposed Rules:

35 ... 41739
284 ... 40493
342 ... 40493
346 ... 40493
347 ... 40493
357 ... 40493
385 ... 40493

19 CFR

4 ... 39682

Proposed Rules:

348 ... 39985
420 ... 39991

20 CFR

416 ... 41399, 41400
655 ... 41874

21 CFR

74 ... 40802
210 ... 39255
211 ... 39255
430 ... 40805
436 ... 40805
455 ... 40805
510 ... 41663
520 ... 39438, 41664
522 ... 41663, 41665
556 ... 38901, 41240
558 ... 38901, 41240

Proposed Rules:

Ch. I ... 39888
102 ... 39635
330 ... 39499

22 CFR

42 ... 39952
518 ... 39440

23 CFR

1212 ... 39256
1313 ... 40470

24 CFR

103 ... 39955
200 ... 39394
204 ... 39956
905 ... 39402
960 ... 39402

Proposed Rules:

91 ... 40148
92 ... 40148
100 ... 40502
261 ... 40764
570 ... 40148, 41196
574 ... 40148
576 ... 40148
968 ... 40148
905 ... 39072
950 ... 39072

25 CFR

Proposed Rules:

10 ... 40086
20 ... 40182
63 ... 40184
115 ... 41948

26 CFR

1 ... 39958, 41666
301 ... 38902
602 ... 41666

Proposed Rules:

1 ... 41414, 41739

28 CFR

0 ... 41241, 41242
2 ... 40257
37 ... 39898
68 ... 41242
77 ... 39910

29 CFR

18 ... 41874
24 ... 41874
1640 ... 39898
1910 ... 40671, 40964
1915 ... 40964
1926 ... 40671, 40964
1952 ... 39257
2619 ... 41704
2676 ... 41704

Proposed Rules:

570 ... 40318

30 CFR

216 ... 38904
218 ... 38904

Proposed Rules:

Ch. II ... 38946
206 ... 39712
250 ... 39991
903 ... 41208
917 ... 40503
926 ... 41262
935 ... 39993
936 ... 40505

32 CFR

77 ... 40809
384 ... 41405

Proposed Rules:

318 ... 41739

33 CFR

26 ... 39962
100 ... 39456, 40819
110 ... 39963, 40820
126 ... 39963
157 ... 40186
160 ... 39458, 39963, 40186
162 ... 39962
165 ... 39456, 39460, 39461, 40821, 40822, 41405, 41406

34 CFR

200 ... 41168
201 ... 41168
364 ... 41880
365 ... 41880
366 ... 41880
367 ... 41880
388 ... 40176
607 ... 41914

Proposed Rules:

350 ... 41176
351 ... 41176
352 ... 41176
353 ... 41176
682 ... 41184

36 CFR

Proposed Rules:

14 ... 39228

38 CFR

21 ... 39966

Proposed Rules:

17 ... 38947
21 ... 40507

39 CFR

11 ... 39257
111 ... 39967

40 CFR

50 ... 38906
52 ... 39683, 39684, 39686, 39688, 39690, 39691, 39692, 39699, 39832, 40823, 40826, 41408, 41706, 41708, 41709
58 ... 41626
60 ... 40258
80 ... 39258
81 ... 39394, 39692, 39699 40084
82 ... 41368
86 ... 39638
125 ... 40642
180 ... 39462, 39464, 39466, 39467
186 ... 39467
228 ... 41243
271 ... 39967, 39971
600 ... 39638
721 ... 39292, 39293, 39295, 40259
799 ... 38917

Proposed Rules:

51 ... 39501

52 ..... 39311, 39715, 39716, 39994, 40840, 41263, 41265, 41416, 41740
63 38949
81 40319
82 41968
124 41741
142 40458
180 ..... 39502, 39504, 39505
185 39505
186 39505
268 41741
270 41741
281 40507
721 ..... 39311, 40001

41 CFR

101–38 41410
101–41 41411

42 CFR

400 39296
405 39828
414 39828

Proposed Rules:

52 39312

43 CFR

Public Land Orders:

725 (Revoked in part by PLO 7072) 39468
829 (Revoked in part by PLO 7071) 39468
7067 39635
7070 39701
7071 39468
7072 39468
7073 39469
7074 39702
7075 39702
7076 39702

Proposed Rules:

11 40319
39 39216
432 39316
2820 39228

44 CFR

64 38921
65 ..... 39972, 40828
67 40830

Proposed Rules:

67 ..... 40002, 40841

45 CFR

2541 41598
2542 41598

Proposed Rules:

400 41417

46 CFR

4 39469
38 39963
68 39635
78 39963
97 39963
194 39963
381 40260

Proposed Rules:

97 40004
148 40004
171 40855

47 CFR

0 39703
2 ..... 40474, 40835
14 40835
18 39471
22 39299
24 ..... 39704, 40835
63 40264
64 ..... 38922, 39300
69 38922
73 ..... 38930, 39301, 41259, 41711

Proposed Rules:

24 41426
73 ..... 38949, 38950, 39317, 40508, 41428

48 CFR

Ch. 12 40268
Ch. 19 40313
225 ..... 38931, 39974
252 38931
519 38931
552 38931
1845 38937
1852 38937

Proposed Rules:

9 39317
10 39317
13 39317
15 39317
23 39317
25 39317
31 39317
45 39317
52 39317
207 40005
237 40005
251 39318
252 ..... 39318, 40005
552 38950
Ch. 9 38951

49 CFR

1 40313
195 41259
229 39705
571 ..... 38938, 39472
575 38938

Proposed Rules:

Ch. X 39524
171 41848
172 41848
173 41848
174 41848
175 41848
176 41848
177 41848
192 ..... 39319, 39506
195 39506
393 39518
571 39522
1312 41428
1314 41428

50 CFR

14 41711
36 39408
204 39301
301 ..... 39476, 39477
605 38942
641 39301
672 ..... 39477, 39478, 39705, 40314
675 ..... 39305, 41412
678 38943

Proposed Rules:

Ch. I 39316
17 ..... 39524, 39532, 39868, 39874, 39879, 40639
29 39228
222 39540
226 39716
227 41270
611 39724
642 40509
651 40510
658 39724
663 40511
675 39725
681 40515
685 40859

LIST OF PUBLIC LAWS

This is a continuing list of public bills from the current session of Congress which have become Federal laws. It may be used in conjunction with "PLUS" (Public Laws Update Service) on 202–523–6641. The text of laws is not published in the **Federal Register** but may be ordered in individual pamphlet form (referred to as "slip laws") from the Superintendent of Documents, U.S. Government Printing Office, Washington, DC 20402 (phone, 202–512–2470).

H.R. 2457/P.L. 103–292

Winter Run Chinook Salmon Captive Broodstock Act of 1993 (Aug. 11, 1994; 108 Stat. 1458; 1 page)

H.J. Res. 374/P.L. 103–293

Designating August 2, 1994, as "National Neighborhood Crime Watch Day". (Aug. 11, 1994; 108 Stat. 1459; 1 page)

S.J. Res. 195/P.L. 103–294

To designate August 1, 1994, as "Helsinki Human Rights Day". (Aug. 11, 1994; 108 Stat. 1460; 2 pages)

H.R. 4429/P.L. 103–295

To authorize the transfer of naval vessels to certain foreign countries. (Aug. 12, 1994; 108 Stat. 1462; 2 pages)

Last List August 5, 1994

CFR CHECKLIST

This checklist, prepared by the Office of the Federal Register, is published weekly. It is arranged in the order of CFR titles, stock numbers, prices, and revision dates.

An asterisk (*) precedes each entry that has been issued since last week and which is now available for sale at the Government Printing Office.

A checklist of current CFR volumes comprising a complete CFR set, also appears in the latest issue of the LSA (List of CFR Sections Affected), which is revised monthly.

The annual rate for subscription to all revised volumes is $829.00 domestic, $207.25 additional for foreign mailing.

Mail orders to the Superintendent of Documents, Attn: New Orders, P.O. Box 371954, Pittsburgh, PA 15250–7954. All orders must be accompanied by remittance (check, money order, GPO Deposit Account, VISA, or Master Card). Charge orders may be telephoned to the GPO Order Desk, Monday through Friday, at **(202) 512–1800** from 8:00 a.m. to 4:00 p.m. eastern time, or FAX your charge orders to **(202) 512-2233**.

Title	Stock Number	Price	Revision Date
1, 2 (2 Reserved)	(869-022-00001-2)	$5.00	Jan. 1, 1994
3 (1993 Compilation and Parts 100 and 101)	(869-022-00002-1)	33.00	[1] Jan. 1, 1994
4	(869-022-00003-9)	5.50	Jan. 1, 1994
5 Parts:			
1-699	(869-022-00004-7)	22.00	Jan. 1, 1994
700-1199	(869-022-00005-5)	19.00	Jan. 1, 1994
1200-End, 6 (6 Reserved)	(869-022-00006-3)	23.00	Jan. 1, 1994
7 Parts:			
0-26	(869-022-00007-1)	21.00	Jan. 1, 1994
27-45	(869-022-00008-0)	14.00	Jan. 1, 1994
46-51	(869-022-00009-8)	20.00	[6] Jan. 1, 1993
52	(869-022-00010-1)	30.00	Jan. 1, 1994
53-209	(869-022-00011-0)	23.00	Jan. 1, 1994
210-299	(869-022-00012-8)	32.00	Jan. 1, 1994
300-399	(869-022-00013-6)	16.00	Jan. 1, 1994
400-699	(869-022-00014-4)	18.00	Jan. 1, 1994
700-899	(869-022-00015-2)	22.00	Jan. 1, 1994
900-999	(869-022-00016-1)	34.00	Jan. 1, 1994
1000-1059	(869-022-00017-9)	23.00	Jan. 1, 1994
1060-1119	(869-022-00018-7)	15.00	Jan. 1, 1994
1120-1199	(869-022-00019-5	12.00	Jan. 1, 1994
1200-1499	(869-022-00020-9)	30.00	Jan. 1, 1994
1500-1899	(869-022-00021-7)	30.00	Jan. 1, 1994
1900-1939	(869-022-00022-5)	15.00	Jan. 1, 1994
1940-1949	(869-022-00023-3)	30.00	Jan. 1, 1994
1950-1999	(869-022-00024-1)	35.00	Jan. 1, 1994
2000-End	(869-022-00025-0)	14.00	Jan. 1, 1994
8	(869-022-00026-8)	22.00	Jan. 1, 1994
9 Parts:			
1-199	(869-022-00027-6)	29.00	Jan. 1, 1994
200-End	(869-022-00028-4)	23.00	Jan. 1, 1994
10 Parts:			
0-50	(869-022-00029-2)	29.00	Jan. 1, 1994
51-199	(869-022-00030-6)	22.00	Jan. 1, 1994
200-399	(869-022-00031-4)	15.00	[6] Jan. 1, 1993
400-499	(869-022-00032-2)	21.00	Jan. 1, 1994
500-End	(869-022-00033-1)	37.00	Jan. 1, 1994
11	(869-022-00034-9)	14.00	Jan. 1, 1994
12 Parts:			
1-199	(869-022-00035-7)	12.00	Jan. 1, 1994
200-219	(869-022-00036-5)	16.00	Jan. 1, 1994
220-299	(869-022-00037-3)	28.00	Jan. 1, 1994
300-499	(869-022-00038-1)	22.00	Jan. 1, 1994
500-599	(869-022-00039-0)	20.00	Jan. 1, 1994
600-End	(869-022-00040-3)	32.00	Jan. 1, 1994
13	(869-022-00041-1)	30.00	Jan. 1 1994
14 Parts:			
1-59	(869-022-00042-0)	32.00	Jan. 1, 1994
60-139	(869-022-00043-8)	26.00	Jan. 1, 1994
140-199	(869-022-00044-6)	13.00	Jan. 1, 1994
200-1199	(869-022-00045-4)	23.00	Jan. 1, 1994
1200-End	(869-022-00046-2)	16.00	Jan. 1, 1994
15 Parts:			
0-299	(869-022-00047-1)	15.00	Jan. 1, 1994
300-799	(869-022-00048-4)	26.00	Jan. 1, 1994
800-End	(869-022-00049-7)	23.00	Jan. 1, 1994
16 Parts:			
0-149	(869-022-00050-1)	6.50	Jan. 1, 1994
150-999	(869-022-00051-9)	18.00	Jan. 1, 1994
1000-End	(869-022-00052-7)	25.00	Jan. 1, 1994
17 Parts:			
*1-199	(869-022-00054-3)	20.00	Apr. 1, 1994
200-239	(869-019-00055-1)	23.00	June 1, 1993
*240-End	(869-022-00056-0)	30.00	April 1, 1994
18 Parts:			
*1-149	(869-022-00057-8)	16.00	Apr. 1, 1994
150-279	(869-022-00058-6)	19.00	Apr. 1, 1994
280-399	(869-022-00059-4)	13.00	Apr. 1, 1994
400-End	(869-022-00060-8)	11.00	Apr. 1, 1994
19 Parts:			
1-199	(869-019-00061-5)	35.00	Apr. 1, 1993
200-End	(869-022-00062-4)	12.00	Apr. 1, 1994
20 Parts:			
1-399	(869-022-00063-2)	20.00	Apr. 1, 1994
400-499	(869-019-00064-0)	31.00	Apr. 1, 1993
500-End	(869-022-00065-9)	31.00	Apr. 1, 1994
21 Parts:			
1-99	(869-022-00066-7)	16.00	Apr. 1, 1994
100-169	(869-022-00067-5)	21.00	Apr. 1, 1994
170-199	(869-022-00068-3)	21.00	Apr. 1, 1994
200-299	(869-022-00069-1)	7.00	Apr. 1, 1994
*300-499	(869-022-00070-5)	36.00	Apr. 1, 1994
500-599	(869-022-00071-3)	16.00	Apr. 1, 1994
600-799	(869-022-00072-1)	8.50	Apr. 1, 1994
800-1299	(869-022-00073-0)	22.00	Apr. 1, 1994
1300-End	(869-022-00074-8)	13.00	Apr. 1, 1994
22 Parts:			
1-299	(869-022-00075-6)	32.00	Apr. 1, 1994
300-End	(869-022-00076-4)	23.00	Apr. 1, 1994
23	(869-019-00077-1)	21.00	Apr. 1, 1993
24 Parts:			
0-199	(869-022-00078-1)	36.00	Apr. 1, 1994
200-499	(869-019-00079-8)	36.00	Apr. 1, 1993
500-699	(869-022-00080-2)	20.00	Apr. 1, 1994
700-1699	(869-019-00081-0)	39.00	Apr. 1, 1993
1700-End	(869-022-00082-9)	17.00	Apr. 1, 1994
25	(869-022-00083-7)	32.00	Apr. 1, 1994
26 Parts:			
*§§ 1.0-1-1.60	(869-022-00084-5)	20.00	Apr. 1, 1994
§§ 1.61-1.169	(869-019-00085-2)	37.00	Apr. 1, 1993
§§ 1.170-1.300	(869-019-00086-1)	23.00	Apr. 1, 1993
*§§ 1.301-1.400	(869-022-00087-0)	17.00	Apr. 1, 1994
§§ 1.401-1.440	(869-019-00088-7)	31.00	Apr. 1, 1993
*§§ 1.441-1.500	(869-022-00089-6)	22.00	Apr. 1, 1994
§§ 1.501-1.640	(869-022-00090-0)	21.00	Apr. 1, 1994
§§ 1.641-1.850	(869-022-00091-8)	24.00	Apr. 1, 1994
§§ 1.851-1.907	(869-019-00092-5)	27.00	Apr. 1, 1993
§§ 1.908-1.1000	(869-022-00093-4)	27.00	Apr. 1, 1994
§§ 1.1001-1.1400	(869-022-00094-2)	24.00	Apr. 1, 1994
§§ 1.1401-End	(869-022-00095-1)	32.00	Apr. 1, 1994
2-29	(869-022-00096-9)	24.00	Apr. 1, 1994
30-39	(869-022-00097-7)	18.00	Apr. 1, 1994
40-49	(869-019-00098-4)	13.00	Apr. 1, 1993
50-299	(869-022-00099-3)	14.00	Apr. 1, 1994
*300-499	(869-022-00100-1)	24.00	Apr. 1, 1994
500-599	(869-022-00101-9)	6.00	[4] Apr. 1 1990

Title	Stock Number	Price	Revision Date
600-End	(869-022-00102-7)	8.00	Apr. 1, 1994
27 Parts:			
1-199	(869-019-00103-4)	37.00	Apr. 1, 1993
200-End	(869-022-00104-3)	13.00	Apr. 1, 1994
28 Parts:			
1-42	(869-019-00105-1)	27.00	July 1, 1993
43-end	(869-019-00106-9)	21.00	July 1, 1993
29 Parts:			
0-99	(869-019-00107-7)	21.00	July 1, 1993
100-499	(869-019-00108-5)	9.50	July 1, 1993
500-899	(869-019-00109-3)	36.00	July 1, 1993
900-1899	(869-019-00110-7)	17.00	July 1, 1993
1900-1910 (§§ 1901.1 to 1910.999)	(869-019-00111-5)	31.00	July 1, 1993
1910 (§§ 1910.1000 to end)	(869-019-00112-3)	21.00	July 1, 1993
1911-1925	(869-019-00113-1)	22.00	July 1, 1993
1926	(869-019-00114-0)	33.00	July 1, 1993
1927-End	(869-019-00115-8)	36.00	July 1, 1993
30 Parts:			
1-199	(869-019-00116-6)	27.00	July 1, 1993
200-699	(869-019-00117-4)	20.00	July 1, 1993
700-End	(869-019-00118-2)	27.00	July 1, 1993
31 Parts:			
0-199	(869-019-00119-1)	18.00	July 1, 1993
200-End	(869-019-00120-4)	29.00	July 1, 1993
32 Parts:			
1-39, Vol. I		15.00	[2] July 1, 1984
1-39, Vol. II		19.00	[2] July 1, 1984
1-39, Vol. III		18.00	[2] July 1, 1984
1-190	(869-019-00121-2)	30.00	July 1, 1993
191-399	(869-019-00122-1)	36.00	July 1, 1993
400-629	(869-019-00123-9)	26.00	July 1, 1993
*630-699	(869-022-00124-8)	14.00	[5] July 1, 1991
700-799	(869-019-00125-5)	21.00	July 1, 1993
800-End	(869-019-00126-3)	22.00	July 1, 1993
33 Parts:			
1-124	(869-019-00127-1)	20.00	July 1, 1993
125-199	(869-019-00128-0)	25.00	July 1, 1993
200-End	(869-019-00129-8)	24.00	July 1, 1993
34 Parts:			
1-299	(869-019-00130-1)	27.00	July 1, 1993
300-399	(869-019-00131-0)	20.00	July 1, 1993
400-End	(869-019-00132-8)	37.00	July 1, 1993
35	(869-019-00133-6)	12.00	July 1, 1993
36 Parts:			
1-199	(869-019-00134-4)	16.00	July 1, 1993
200-End	(869-019-00135-2)	35.00	July 1, 1993
37	(869-019-00136-1)	20.00	July 1, 1993
38 Parts:			
0-17	(869-019-00137-9)	31.00	July 1, 1993
18-End	(869-019-00138-7)	30.00	July 1, 1993
39	(869-019-00139-5)	17.00	July 1, 1993
40 Parts:			
1-51	(869-019-00140-9)	39.00	July 1, 1993
52	(869-019-00141-7)	37.00	July 1, 1993
53-59	(869-019-00142-5)	11.00	July 1, 1993
60	(869-019-00143-3)	35.00	July 1, 1993
61-80	(869-019-00144-1)	29.00	July 1, 1993
81-85	(869-019-00145-0)	21.00	July 1, 1993
86-99	(869-019-00146-8)	39.00	July 1, 1993
100-149	(869-019-00147-6)	36.00	July 1, 1993
150-189	(869-019-00148-4)	24.00	July 1, 1993
190-259	(869-019-00149-2)	17.00	July 1, 1993
260-299	(869-019-00150-6)	39.00	July 1, 1993
300-399	(869-019-00151-4)	18.00	July 1, 1993
400-424	(869-019-00152-2)	27.00	July 1, 1993
425-699	(869-019-00153-1)	28.00	July 1, 1993
700-789	(869-019-00154-9)	26.00	July 1, 1993
790-End	(869-019-00155-7)	26.00	July 1, 1993
41 Chapters:			
1, 1-1 to 1-10		13.00	[3] July 1, 1984
1, 1-11 to Appendix, 2 (2 Reserved)		13.00	[3] July 1, 1984
3-6		14.00	[3] July 1, 1984
7		6.00	[3] July 1, 1984
8		4.50	[3] July 1, 1984
9		13.00	[3] July 1, 1984
10-17		9.50	[3] July 1, 1984
18, Vol. I, Parts 1-5		13.00	[3] July 1, 1984
18, Vol. II, Parts 6-19		13.00	[3] July 1, 1984
18, Vol. III, Parts 20-52		13.00	[3] July 1, 1984
19-100		13.00	[3] July 1, 1984
1-100	(869-019-00156-5)	10.00	July 1, 1993
.101	(869-019-00157-3)	30.00	July 1, 1993
102-200	(869-019-00158-1)	11.00	[5] July 1, 1991
201-End	(869-019-00159-0)	12.00	July 1, 1993
42 Parts:			
1-399	(869-019-00160-3)	24.00	Oct. 1, 1993
400-429	(869-019-00161-1)	25.00	Oct. 1, 1993
430-End	(869-019-00162-0)	36.00	Oct. 1, 1993
43 Parts:			
1-999	(869-019-00163-8)	23.00	Oct. 1, 1993
1000-3999	(869-019-00164-6)	32.00	Oct. 1, 1993
4000-End	(869-019-00165-4)	14.00	Oct. 1, 1993
44	(869-019-00166-2)	27.00	Oct. 1, 1993
45 Parts:			
1-199	(869-019-00167-1)	22.00	Oct. 1, 1993
200-499	(869-019-00168-9)	15.00	Oct. 1, 1993
500-1199	(869-019-00169-7)	30.00	Oct. 1, 1993
1200-End	(869-019-00170-1)	22.00	Oct. 1, 1993
46 Parts:			
1-40	(869-019-00171-9)	18.00	Oct. 1, 1993
41-69	(869-019-00172-7)	16.00	Oct. 1, 1993
70-89	(869-019-00173-5)	8.50	Oct. 1, 1993
90-139	(869-019-00174-3)	15.00	Oct. 1, 1993
140-155	(869-019-00175-1)	12.00	Oct. 1, 1993
156-165	(869-019-00176-0)	17.00	Oct. 1, 1993
166-199	(869-019-00177-8)	17.00	Oct. 1, 1993
200-499	(869-019-00178-6)	20.00	Oct 1, 1993
500-End	(869-019-00179-4)	15.00	Oct. 1, 1993
47 Parts:			
0-19	(869-019-00180-8)	24.00	Oct. 1, 1993
20-39	(869-019-00181-6)	24.00	Oct. 1, 1993
40-69	(869-019-00182-4)	14.00	Oct. 1, 1993
70-79	(869-019-00183-2)	23.00	Oct. 1, 1993
80-End	(869-019-00184-1)	26.00	Oct. 1, 1993
48 Chapters:			
1 (Parts 1-51)	(869-019-00185-9)	36.00	Oct. 1, 1993
1 (Parts 52-99)	(869-019-00186-7)	23.00	Oct. 1, 1993
2 (Parts 201-251)	(869-019-00187-5)	16.00	Oct. 1, 1993
2 (Parts 252-299)	(869-019-00188-3)	12.00	Oct. 1, 1993
3-6	(869-019-00189-1)	23.00	Oct. 1, 1993
7-14	(869-019-00190-5)	31.00	Oct. 1, 1993
15-28	(869-019-00191-3)	31.00	Oct. 1, 1993
29-End	(869-019-00192-1)	17.00	Oct. 1, 1993
49 Parts:			
1-99	(869-019-00193-0)	23.00	Oct. 1, 1993
100-177	(869-019-00194-8)	30.00	Oct. 1, 1993
178-199	(869-019-00195-6)	20.00	Oct. 1, 1993
200-399	(869-019-00196-4)	27.00	Oct. 1, 1993
400-999	(869-019-00197-2)	33.00	Oct. 1, 1993
1000-1199	(869-019-00198-1)	18.00	Oct. 1, 1993
1200-End	(869-019-00199-9)	22.00	Oct. 1, 1993
50 Parts:			
1-199	(869-019-00200-6)	20.00	Oct. 1, 1993
200-599	(869-019-00201-4)	21.00	Oct. 1, 1993
600-End	(869-019-00202-2)	22.00	Oct. 1, 1993
CFR Index and Findings Aids	(869-022-00053-5)	38.00	Jan. 1, 1994

Title	Stock Number	Price	Revision Date
Complete 1994 CFR set		829.00	1994
Microfiche CFR Edition:			
Complete set (one-time mailing)		188.00	1991
Complete set (one-time mailing)		188.00	1992
Complete set (one-time mailing)		223.00	1993
Subscription (mailed as issued)		244.00	1994
Individual copies		2.00	1994

[1] Because Title 3 is an annual compilation, this volume and all previous volumes should be retained as a permanent reference source.

[2] The July 1, 1985 edition of 32 CFR Parts 1–189 contains a note only for Parts 1–39 inclusive. For the full text of the Defense Acquisition Regulations in Parts 1–39, consult the three CFR volumes issued as of July 1, 1984, containing those parts.

[3] The July 1, 1985 edition of 41 CFR Chapters 1–100 contains a note only for Chapters 1 to 49 inclusive. For the full text of procurement regulations in Chapters 1 to 49, consult the eleven CFR volumes issued as of July 1, 1984 containing those chapters.

[4] No amendments to this volume were promulgated during the period Apr. 1, 1990 to Mar. 31, 1994. The CFR volume issued April 1, 1990, should be retained.

[5] No amendments to this volume were promulgated during the period July 1, 1991 to June 30, 1994. The CFR volume issued July 1, 1991, should be retained.

[6] No amendments to this volume were promulgated during the period January 1, 1993 to December 31, 1993. The CFR volume issued January 1, 1993, should be retained.

Order Now!

The United States Government Manual 1993/94

As the official handbook of the Federal Government, the *Manual* is the best source of information on the activities, functions, organization, and principal officials of the agencies of the legislative, judicial, and executive branches. It also includes information on quasi-official agencies and international organizations in which the United States participates.

Particularly helpful for those interested in where to go and who to see about a subject of particular concern is each agency's "Sources of Information" section, which provides addresses and telephone numbers for use in obtaining specifics on consumer activities, contracts and grants, employment, publications and films, and many other areas of citizen interest. The *Manual* also includes comprehensive name and agency/subject indexes.

Of significant historical interest is Appendix C, which lists the agencies and functions of the Federal Government abolished, transferred, or changed in name subsequent to March 4, 1933.

The *Manual* is published by the Office of the Federal Register, National Archives and Records Administration.

$30.00 per copy

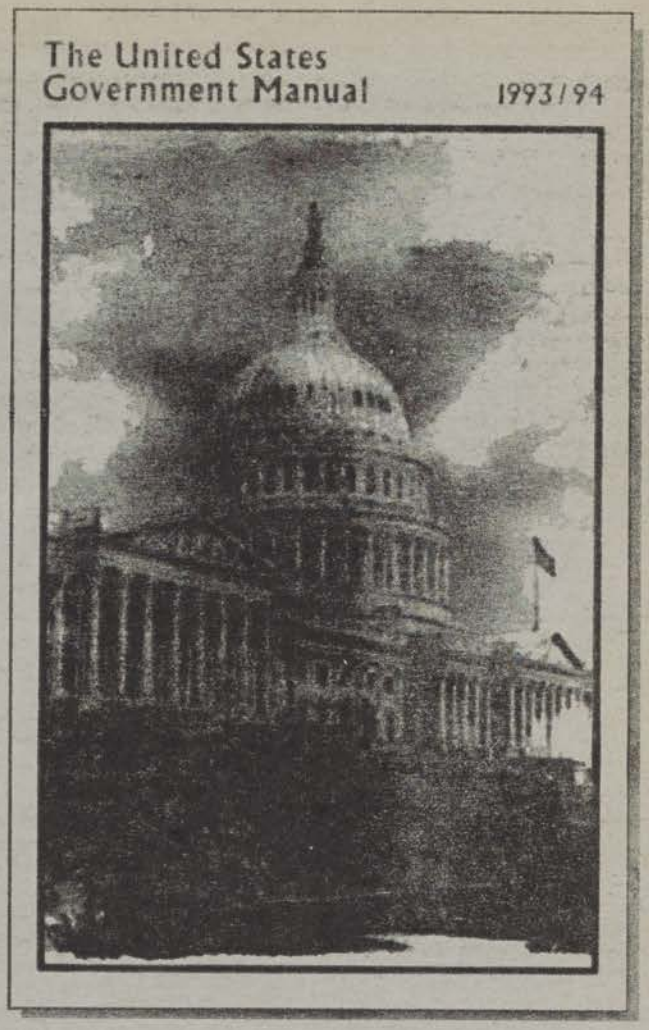

Superintendent of Documents **Publications** Order Form

Order Processing Code:
*** 6395**

Charge your order. It's easy! MasterCard VISA

To fax your orders (202) 512–2250

☐ **YES,** please send me _____ copies of the **The United States Government Manual, 1993/94** S/N 069–000–00053–3 at $30.00 ($37.50 foreign) each.

The total cost of my order is $ _____. Price includes regular domestic postage and handling and is subject to change.

(Company or personal name) (Please type or print)

(Additional address/attention line)

(Street address)

(City, State, Zip code)

(Daytime phone including area code)

(Purchase order no.)

Please choose method of payment:

❑ Check payable to the Superintendent of Documents

❑ GPO Deposit Account ☐☐☐☐☐☐☐ – ☐

❑ VISA ❑ MasterCard Account

☐☐☐☐☐☐☐☐☐☐☐☐☐☐☐☐☐☐☐☐

☐☐☐☐ (Credit card expiration date)

Thank you for your order!

(Authorizing signature) (Rev 9/93)

Mail to: Superintendent of Documents
P.O. Box 371954, Pittsburgh, PA 15250–7954

New Publication

List of CFR Sections Affected

1973-1985

A Research Guide

These four volumes contain a compilation of the "List of CFR Sections Affected (LSA)" for the years 1973 through 1985. Reference to these tables will enable the user to find the precise text of CFR provisions which were in force and effect on any given date during the period covered.

Volume I (Titles 1 thru 16) $27.00
Stock Number 069-000-00029-1

Volume II (Titles 17 thru 27) $25.00
Stock Number 069-000-00030-4

Volume III (Titles 28 thru 41) $28.00
Stock Number 069-000-00031-2

Volume IV (Titles 42 thru 50) $25.00
Stock Number 069-000-00032-1

Superintendent of Documents **Publications** Order Form

Order Processing Code:
***6962**

Charge your order. It's easy!

To fax your orders and inquiries—(202) 512-2250

Please Type or Print (Form is aligned for typewriter use.)
Prices include regular domestic postage and handling and are good through 12/92. After this date, please call Order and Information Desk at 202-783-3238 to verify prices. International customers please add 25%.

Qty.	Stock Number	Title	Price Each	Total Price
1	021-602-00001-9	Catalog—Bestselling Government Books	FREE	FREE

Total for Publications

(Company or personal name) (Please type or print)

(Additional address/attention line)

(Street address)

(City, State, ZIP Code)

( )
(Daytime phone including area code)

Mail order to:
New Orders, Superintendent of Documents
P.O. Box 371954, Pittsburgh, PA 15250-7954

Please Choose Method of Payment:

☐ Check payable to the Superintendent of Documents

☐ GPO Deposit Account ☐☐☐☐☐☐☐ – ☐

☐ VISA or MasterCard Account

(Credit card expiration date)

Thank you for your order!

(Signature)

Rev 6-92

Printed on recycled paper